AR2050V

SECURE VPN ROUTER

Command Reference for AlliedWare Plus™ Version 5.4.7-1.x

C613-50186-01 Rev B

Acknowledgments

This product includes software developed by the University of California, Berkeley and its contributors.

Copyright ©1982, 1986, 1990, 1991, 1993 The Regents of the University of California.

All rights reserved.

This product includes software developed by the OpenSSL Project for use in the OpenSSL Toolkit. For information about this see **www.openssl.org/**

Copyright ©1998-2008 The OpenSSL Project. All rights reserved.

This product includes software licensed under v2 and v3 of the GNU General Public License, available from: **www.gnu.org/licenses/gpl2.html** and **www.gnu.org/licenses/gpl.html** respectively.

Source code for all GPL licensed software in this product can be obtained from the Allied Telesis GPL Code Download Center at: **www.alliedtelesis.com/support/**

Allied Telesis is committed to meeting the requirements of the open source licenses including the GNU General Public License (GPL) and will make all required source code available.

If you would like a copy of the GPL source code contained in Allied Telesis products, please send us a request by registered mail including a check for US$15 to cover production and shipping costs and a CD with the GPL code will be mailed to you.

GPL Code Request
Allied Telesis Labs (Ltd)
PO Box 8011
Christchurch
New Zealand

Allied Telesis, AlliedWare Plus, Allied Telesis Management Framework, EPSRing, SwitchBlade, VCStack, and VCStack Plus are trademarks or registered trademarks in the United States and elsewhere of Allied Telesis, Inc.

Microsoft and Internet Explorer are registered trademarks of Microsoft Corporation. All other product names, company names, logos or other designations mentioned herein may be trademarks or registered trademarks of their respective owners.

© 2017 Allied Telesis, Inc.

All rights reserved. No part of this publication may be reproduced without prior written permission from Allied Telesis, Inc.

Allied Telesis, Inc. reserves the right to make changes in specifications and other information contained in this document without prior written notice. The information provided herein is subject to change without notice. In no event shall Allied Telesis, Inc. be liable for any incidental, special, indirect, or consequential damages whatsoever, including but not limited to lost profits, arising out of or related to this manual or the information contained herein, even if Allied Telesis, Inc. has been advised of, known, or should have known, the possibility of such damages.

Contents

PART 1: Setup and Troubleshooting 95

Chapter 1: CLI Navigation Commands 96

Introduction 96
configure terminal 97
disable (Privileged Exec mode) 98
do 99
enable (Privileged Exec mode) 100
end 102
exit 103
help 104
logout 105
show history 106

Chapter 2: File and Configuration Management Commands 107

Introduction 107
autoboot enable 110
boot config-file 111
boot config-file backup 112
boot system 113
boot system backup 114
cd 115
copy (filename) 116
copy current-software 118
copy debug 119
copy running-config 120
copy startup-config 121
copy zmodem 122
create autoboot 123
delete 124
delete debug 125
dir 126
edit 128
edit (filename) 129

erase factory-default 130
erase startup-config 131
ip tftp source-interface 132
ipv6 tftp source-interface 133
mkdir 134
move 135
move debug 136
pwd 137
rmdir 138
show autoboot 139
show boot 140
show file 142
show file systems 143
show running-config 145
show running-config interface 149
show startup-config 151
show version 152
unmount 157
write file 158
write memory 159
write terminal 160

Chapter 3: User Access Commands 161

Introduction 161
clear line console 163
clear line vty 164
enable password 165
enable secret 168
exec-timeout 171
flowcontrol hardware (asyn/console) 173
length (asyn) 175
line 176
privilege level 178
security-password history 179
security-password forced-change 180
security-password lifetime 181
security-password min-lifetime-enforce 182
security-password minimum-categories 183
security-password minimum-length 184
security-password reject-expired-pwd 185
security-password warning 186
service advanced-vty 187
service password-encryption 188
service telnet 189
show privilege 190
show security-password configuration 191
show security-password user 192
show telnet 193
show users 194
telnet 195
telnet server 196
terminal length 197
terminal resize 198

username 199

Chapter 4: GUI Commands 201
Introduction 201
atmf topology-gui enable 202
http secure-port 203
log event-host 204
service http 205
show http 206
update webgui now 207

Chapter 5: Update Manager Commands 208
Introduction 208
show resource 209
update webgui now 210

Chapter 6: System Configuration and Monitoring Commands 211
Introduction 211
banner exec 213
banner login (system) 215
banner motd 217
clock set 219
clock summer-time date 220
clock summer-time recurring 222
clock timezone 224
hostname 225
max-fib-routes 227
max-static-routes 229
no debug all 230
reboot 232
reload 233
show clock 234
show cpu 236
show cpu history 239
show debugging 241
show interface memory 242
show memory 244
show memory allocations 246
show memory history 248
show memory pools 249
show memory shared 250
show process 251
show reboot history 253
show router-id 254
show system 255
show system environment 256
show system interrupts 257
show system mac 258
show system pci device 259
show system pci tree 260
show system serialnumber 261
show tech-support 262

speed (asyn) 264
terminal monitor 266
undebug all 267

Chapter 7: Logging Commands 268
Introduction 268
clear exception log 271
clear log 272
clear log buffered 273
clear log external 274
clear log permanent 275
connection-log events 276
copy buffered-log 277
copy permanent-log 278
default log buffered 279
default log console 280
default log email 281
default log external 282
default log host 283
default log monitor 284
default log permanent 285
log buffered 286
log buffered (filter) 287
log buffered exclude 290
log buffered size 293
log console 294
log console (filter) 295
log console exclude 298
log date-format 301
log email 302
log email (filter) 303
log email exclude 306
log email time 309
log external 311
log external (filter) 313
log external exclude 316
log external rotate 319
log external size 321
log facility 322
log host 324
log host (filter) 326
log host exclude 329
log host source 332
log host time 333
log monitor (filter) 335
log monitor exclude 338
log permanent 341
log permanent (filter) 342
log permanent exclude 345
log permanent size 348
log-rate-limit nsm 349
log trustpoint 351
log url-requests 352

show connection-log events 353
show counter log 354
show exception log 355
show log 356
show log config 358
show log external 360
show log permanent 361
show running-config log 362
unmount 363

Chapter 8: Scripting Commands 364
Introduction 364
activate 365
echo 366
wait 367

Chapter 9: Interface Commands 368
Introduction 368
description (interface) 369
interface (to configure) 370
ip tcp adjust-mss 372
ipv6 tcp adjust-mss 374
mru jumbo 376
mtu 377
show interface 379
show interface brief 383
show interface memory 384
show interface status 386
shutdown 388

Chapter 10: USB Cellular Modem Commands 389
Introduction 389
apn 390
chat-script 392
encapsulation ppp 393
show cellular 395
show system usb 398
usb mode-switch 400

Chapter 11: Port Mirroring Commands 402
Introduction 402
mirror interface 403
show mirror 405
show mirror interface 406

Chapter 12: Interface Testing Commands 407
Introduction 407
clear test interface 408
service test 409
test interface 410

PART 2: Interfaces and Layer 2 412

Chapter 13: Switching Commands 413
Introduction 413
backpressure 415
clear mac address-table dynamic 417
clear mac address-table static 419
clear port counter 420
debug platform packet 421
duplex 423
flowcontrol (switch port) 425
linkflap action 427
mac address-table acquire 428
mac address-table ageing-time 429
mac address-table static 430
polarity 431
show debugging platform packet 432
show flowcontrol interface 433
show interface err-disabled 434
show interface switchport 435
show mac address-table 436
show platform 438
show platform port 439
show storm-control 444
speed 445
storm-control level 447
undebug platform packet 448

Chapter 14: Bridging Commands 449
Introduction 449
ageing-time 450
bridge 451
bridge-group 452
clear mac-filter 453
l3-filtering enable 454
mac-filter 455
mac-filter-group 456
mac-learning 457
rule (MAC Filter) 458
show bridge 460
show bridge macaddr 462
show mac-filter 463

Chapter 15: VLAN Commands 464
Introduction 464
show vlan 465
switchport access vlan 466
switchport mode access 467
switchport mode trunk 468
switchport trunk allowed vlan 469
switchport trunk native vlan 472
vlan 473

vlan database 474

Chapter 16: Spanning Tree Commands 475

Introduction 475
clear spanning-tree statistics 477
clear spanning-tree detected protocols (RSTP and MSTP) 478
debug mstp (RSTP and STP) 479
instance priority (MSTP) 483
instance vlan (MSTP) 485
region (MSTP) 487
revision (MSTP) 488
show debugging mstp 489
show spanning-tree 490
show spanning-tree brief 493
show spanning-tree mst 494
show spanning-tree mst config 495
show spanning-tree mst detail 496
show spanning-tree mst detail interface 498
show spanning-tree mst instance 500
show spanning-tree mst instance interface 501
show spanning-tree mst interface 502
show spanning-tree mst detail interface 503
show spanning-tree statistics 505
show spanning-tree statistics instance 507
show spanning-tree statistics instance interface 508
show spanning-tree statistics interface 510
show spanning-tree vlan range-index 512
spanning-tree autoedge (RSTP and MSTP) 513
spanning-tree cisco-interoperability (MSTP) 514
spanning-tree edgeport (RSTP and MSTP) 515
spanning-tree enable 516
spanning-tree errdisable-timeout enable 518
spanning-tree errdisable-timeout interval 519
spanning-tree force-version 520
spanning-tree forward-time 521
spanning-tree guard root 522
spanning-tree hello-time 523
spanning-tree link-type 524
spanning-tree max-age 525
spanning-tree max-hops (MSTP) 526
spanning-tree mode 527
spanning-tree mst configuration 528
spanning-tree mst instance 529
spanning-tree mst instance path-cost 530
spanning-tree mst instance priority 532
spanning-tree mst instance restricted-role 533
spanning-tree mst instance restricted-tcn 535
spanning-tree path-cost 536
spanning-tree portfast (STP) 537
spanning-tree portfast bpdu-filter 539
spanning-tree portfast bpdu-guard 541
spanning-tree priority (bridge priority) 543
spanning-tree priority (port priority) 544

spanning-tree restricted-role 545
spanning-tree restricted-tcn 546
spanning-tree transmit-holdcount 547
undebug mstp 548

Chapter 17: Link Aggregation Commands 549
Introduction 549
channel-group 551
clear lacp counters 553
debug lacp 554
lacp global-passive-mode enable 555
lacp port-priority 556
lacp system-priority 557
lacp timeout 558
show debugging lacp 560
show diagnostic channel-group 561
show etherchannel 562
show etherchannel detail 563
show etherchannel summary 564
show lacp sys-id 565
show lacp-counter 566
show port etherchannel 567
show static-channel-group 568
static-channel-group 569
undebug lacp 571

Chapter 18: 802.1Q Encapsulation Commands 572
Introduction 572
encapsulation dot1q 573

Chapter 19: PPP Commands 575
Introduction 575
debug ppp 577
encapsulation ppp 580
interface (PPP) 582
ip address negotiated 583
ip tcp adjust-mss 585
ip unnumbered 587
ipv6 tcp adjust-mss 589
keepalive (PPP) 591
mtu (PPP) 593
peer default ip address 594
peer neighbor-route 596
ppp authentication 598
ppp authentication refuse 600
ppp hostname 602
ppp ipcp dns 604
ppp ipcp dns suffix-list 606
ppp ipcp ip-override 608
ppp password 609
ppp service-name (PPPoE) 610
ppp timeout idle 611

ppp username 612
show debugging ppp 613
show interface (PPP) 614
undebug ppp 618

Chapter 20: PPP over Ethernet (PPPoE) Commands 619
Introduction 619
clear pppoe-ac statistics 620
debug pppoe-ac 621
destination l2tp 622
l2tp peer-address dns-lookup 623
l2tp peer-address radius-lookup group 625
l2tp peer-address static 626
l2tp profile 628
ppp-auth-protocol 630
pppoe-ac 631
pppoe-ac-service 632
proxy-auth 633
service-name 634
show debugging pppoe ac 636
show pppoe-ac config-check 637
show pppoe-ac connections 639
show pppoe-ac statistics 641
show running-config pppoe-ac 644

PART 3: Routing 645

Chapter 21: IP Addressing and Protocol Commands 646
Introduction 646
arp-aging-timeout 648
arp (IP address MAC) 649
arp log 651
arp opportunistic-nd 654
arp-reply-bc-dmac 656
clear arp-cache 657
debug ip packet interface 659
ip address (IP Addressing and Protocol) 661
ip directed-broadcast 663
ip forward-protocol udp 665
ip gratuitous-arp-link 667
ip helper-address 669
ip limited-local-proxy-arp 671
ip local-proxy-arp 673
ip proxy-arp 674
ip redirects 675
ip tcp synack-retries 676
ip tcp timeout established 677
ip unreachables 678
local-proxy-arp 680
optimistic-nd 681
ping 682
show arp 684

show debugging ip packet 687
show ip forwarding 689
show ip interface 690
show ip interface vrf 691
show ip sockets 693
show ip traffic 696
tcpdump 698
traceroute 699
undebug ip packet interface 700

Chapter 22: Domain Name Service (DNS) Commands 701
Introduction 701
clear ip dns forwarding cache 703
ddns enable 704
ddns-update-method 705
ddns-update now 706
debug ddns 707
debug ip dns forwarding 708
description (Domain List) 709
domain (Domain List) 710
host-name (DDNS) 711
ip ddns-update-method 712
ip dns forwarding 713
ip dns forwarding cache 714
ip dns forwarding dead-time 715
ip dns forwarding domain-list 716
ip dns forwarding retry 717
ip dns forwarding source-interface 718
ip dns forwarding timeout 719
ip domain-list 720
ip domain-lookup 721
ip domain-name 722
ip name-server 723
ipv6 ddns-update-method 725
password (DDNS) 726
ppp ipcp dns 727
ppp ipcp dns suffix-list 729
retry-interval (DDNS) 731
show ddns-update-method status 732
show debugging ip dns forwarding 733
show hosts 734
show ip dns forwarding 735
show ip dns forwarding cache 736
show ip dns forwarding server 738
show ip domain-list 740
show ip domain-name 741
show ip name-server 742
suppress-ipv4-updates (DDNS) 744
undebug (DDNS) 745
update-interval (DDNS) 746
update-url (DDNS) 747
use-ipv4-for-ipv6-updates (DDNS) 750
username (DDNS) 751

Chapter 23: IPv6 Commands 752
Introduction 752
clear ipv6 neighbors 754
ipv6 address 755
ipv6 address autoconfig 757
ipv6 enable 759
ipv6 eui64-linklocal 761
ipv6 forwarding 762
ipv6 multicast forward-slow-path-packet 763
ipv6 nd accept-ra-pinfo 764
ipv6 nd current-hoplimit 765
ipv6 nd managed-config-flag 767
ipv6 nd minimum-ra-interval 768
ipv6 nd other-config-flag 770
ipv6 nd prefix 771
ipv6 nd ra-interval 773
ipv6 nd ra-lifetime 774
ipv6 nd reachable-time 775
ipv6 nd retransmission-time 777
ipv6 nd suppress-ra 779
ipv6 neighbor 780
ipv6 opportunistic-nd 781
ipv6 route 782
ipv6 unreachables 783
ping ipv6 784
show ipv6 forwarding 785
show ipv6 interface brief 786
show ipv6 neighbors 787
show ipv6 route 788
show ipv6 route summary 790
traceroute ipv6 791

Chapter 24: Routing Commands 792
Introduction 792
ip route 793
ipv6 route 796
max-fib-routes 797
max-static-routes 799
maximum-paths 800
show ip route 801
show ip route database 804
show ip route summary 807
show ipv6 route 809
show ipv6 route summary 811

Chapter 25: RIP Commands 812
Introduction 812
accept-lifetime 814
address-family ipv4 (RIP) 816
alliedware-behavior 817
cisco-metric-behavior (RIP) 819
clear ip rip route 820

debug rip 822
default-information originate (RIP) 823
default-metric (RIP) 824
distance (RIP) 825
distribute-list (RIP) 826
fullupdate (RIP) 827
ip rip authentication key-chain 828
ip rip authentication mode 830
ip rip authentication string 833
ip rip receive-packet 835
ip rip receive version 836
ip rip send-packet 837
ip rip send version 838
ip rip send version 1-compatible 841
ip rip split-horizon 843
key 844
key chain 845
key-string 846
maximum-prefix 847
neighbor (RIP) 848
network (RIP) 849
passive-interface (RIP) 851
recv-buffer-size (RIP) 852
redistribute (RIP) 853
restart rip graceful 855
rip restart grace-period 856
route (RIP) 857
router rip 858
send-lifetime 859
show debugging rip 861
show ip protocols rip 862
show ip rip 863
show ip rip database 864
show ip rip interface 865
show ip rip vrf database 866
show ip rip vrf interface 867
timers (RIP) 868
undebug rip 870
version (RIP) 871

Chapter 26: RIPng for IPv6 Commands 873

Introduction 873
aggregate-address (IPv6 RIPng) 875
clear ipv6 rip route 876
debug ipv6 rip 877
default-information originate (IPv6 RIPng) 878
default-metric (IPv6 RIPng) 879
distribute-list (IPv6 RIPng) 880
ipv6 rip metric-offset 881
ipv6 rip split-horizon 883
ipv6 router rip 885
neighbor (IPv6 RIPng) 886
passive-interface (IPv6 RIPng) 887

recv-buffer-size (IPv6 RIPng) 888
redistribute (IPv6 RIPng) 889
route (IPv6 RIPng) 890
router ipv6 rip 891
show debugging ipv6 rip 892
show ipv6 protocols rip 893
show ipv6 rip 894
show ipv6 rip database 895
show ipv6 rip interface 896
timers (IPv6 RIPng) 897
undebug ipv6 rip 898

Chapter 27: OSPF Commands 899
Introduction 899
area default-cost 902
area authentication 903
area filter-list 904
area nssa 905
area range 907
area stub 909
area virtual-link 910
auto-cost reference bandwidth 913
bandwidth 915
capability opaque 916
capability restart 917
clear ip ospf process 918
compatible rfc1583 919
debug ospf events 920
debug ospf ifsm 921
debug ospf lsa 922
debug ospf nfsm 923
debug ospf nsm 924
debug ospf packet 925
debug ospf route 926
default-information originate 927
default-metric (OSPF) 928
distance (OSPF) 929
enable db-summary-opt 931
host area 932
ip ospf authentication 933
ip ospf authentication-key 934
ip ospf cost 936
ip ospf database-filter 937
ip ospf dead-interval 938
ip ospf disable all 939
ip ospf hello-interval 940
ip ospf message-digest-key 941
ip ospf mtu 943
ip ospf mtu-ignore 944
ip ospf network 945
ip ospf priority 946
ip ospf resync-timeout 947
ip ospf retransmit-interval 948

ip ospf transmit-delay 949
max-concurrent-dd 950
maximum-area 951
neighbor (OSPF) 952
network area 953
ospf abr-type 955
ospf restart grace-period 956
ospf restart helper 957
ospf router-id 959
overflow database 960
overflow database external 961
passive-interface (OSPF) 962
redistribute (OSPF) 963
restart ospf graceful 965
router ospf 966
router-id 968
show debugging ospf 969
show ip ospf 970
show ip ospf border-routers 973
show ip ospf database 974
show ip ospf database asbr-summary 976
show ip ospf database external 977
show ip ospf database network 979
show ip ospf database nssa-external 980
show ip ospf database opaque-area 982
show ip ospf database opaque-as 983
show ip ospf database opaque-link 984
show ip ospf database router 985
show ip ospf database summary 987
show ip ospf interface 990
show ip ospf neighbor 991
show ip ospf route 993
show ip ospf virtual-links 994
show ip protocols ospf 995
summary-address 996
timers spf exp 997
undebug ospf events 998
undebug ospf ifsm 999
undebug ospf lsa 1000
undebug ospf nfsm 1001
undebug ospf nsm 1002
undebug ospf packet 1003
undebug ospf route 1004

Chapter 28: OSPFv3 for IPv6 Commands 1005

Introduction 1005
abr-type 1008
area authentication ipsec spi 1009
area default-cost (IPv6 OSPF) 1011
area encryption ipsec spi esp 1012
area range (IPv6 OSPF) 1015
area stub (IPv6 OSPF) 1017
area virtual-link (IPv6 OSPF) 1018

area virtual-link authentication ipsec spi 1020
area virtual-link encryption ipsec spi 1022
auto-cost reference bandwidth (IPv6 OSPF) 1025
bandwidth 1027
clear ipv6 ospf process 1028
debug ipv6 ospf events 1029
debug ipv6 ospf ifsm 1030
debug ipv6 ospf lsa 1031
debug ipv6 ospf nfsm 1032
debug ipv6 ospf packet 1033
debug ipv6 ospf route 1034
default-information originate 1035
default-metric (IPv6 OSPF) 1036
distance (IPv6 OSPF) 1037
ipv6 ospf authentication spi 1039
ipv6 ospf cost 1041
ipv6 ospf dead-interval 1043
ipv6 ospf display route single-line 1044
ipv6 ospf encryption spi esp 1045
ipv6 ospf hello-interval 1048
ipv6 ospf neighbor 1049
ipv6 ospf network 1051
ipv6 ospf priority 1052
ipv6 ospf retransmit-interval 1053
ipv6 ospf transmit-delay 1054
ipv6 router ospf area 1055
max-concurrent-dd (IPv6 OSPF) 1057
passive-interface (IPv6 OSPF) 1058
redistribute (IPv6 OSPF) 1059
restart ipv6 ospf graceful 1061
router ipv6 ospf 1062
router-id (IPv6 OSPF) 1063
show debugging ipv6 ospf 1064
show ipv6 ospf 1065
show ipv6 ospf database 1067
show ipv6 ospf database external 1069
show ipv6 ospf database grace 1070
show ipv6 ospf database inter-prefix 1071
show ipv6 ospf database inter-router 1072
show ipv6 ospf database intra-prefix 1073
show ipv6 ospf database link 1074
show ipv6 ospf database network 1075
show ipv6 ospf database router 1077
show ipv6 ospf interface 1082
show ipv6 ospf neighbor 1084
show ipv6 ospf route 1086
show ipv6 ospf virtual-links 1088
summary-address (IPv6 OSPF) 1089
timers spf (IPv6 OSPF) (deprecated) 1091
timers spf exp (IPv6 OSPF) 1092
undebug ipv6 ospf events 1093
undebug ipv6 ospf ifsm 1094
undebug ipv6 ospf lsa 1095

undebug ipv6 ospf nfsm 1096
undebug ipv6 ospf packet 1097
undebug ipv6 ospf route 1098

Chapter 29: BGP and BGP4+ Commands 1099

Introduction 1099
address-family 1105
aggregate-address 1107
auto-summary (BGP only) 1110
bgp aggregate-nexthop-check 1111
bgp always-compare-med 1112
bgp bestpath as-path ignore 1113
bgp bestpath compare-confed-aspath 1114
bgp bestpath compare-routerid 1115
bgp bestpath med 1116
bgp bestpath med remove-recv-med 1118
bgp bestpath med remove-send-med 1119
bgp client-to-client reflection 1120
bgp cluster-id 1121
bgp confederation identifier 1123
bgp confederation peers 1124
bgp config-type 1126
bgp dampening 1128
bgp damp-peer-oscillation (BGP only) 1130
bgp default ipv4-unicast 1131
bgp default local-preference (BGP only) 1132
bgp deterministic-med 1133
bgp enforce-first-as 1135
bgp fast-external-failover 1136
bgp graceful-restart 1137
bgp graceful-restart graceful-reset 1139
bgp log-neighbor-changes 1140
bgp memory maxallocation 1142
bgp nexthop-trigger-count 1143
bgp nexthop-trigger delay 1144
bgp nexthop-trigger enable 1145
bgp rfc1771-path-select (BGP only) 1146
bgp rfc1771-strict (BGP only) 1147
bgp router-id 1148
bgp scan-time (BGP only) 1149
bgp update-delay 1150
clear bgp * 1151
clear bgp (IPv4 or IPv6 address) 1152
clear bgp (ASN) 1154
clear bgp external 1155
clear bgp peer-group 1156
clear ip bgp * (BGP only) 1157
clear ip bgp (IPv4) (BGP only) 1159
clear ip bgp dampening (BGP only) 1160
clear ip bgp flap-statistics (BGP only) 1161
clear ip bgp (ASN) (BGP only) 1162
clear ip bgp external (BGP only) 1163
clear ip bgp peer-group (BGP only) 1164

clear bgp ipv6 (ipv6 address) (BGP4+ only) 1165
clear bgp ipv6 dampening (BGP4+ only) 1166
clear bgp ipv6 flap-statistics (BGP4+ only) 1167
clear bgp ipv6 (ASN) (BGP4+ only) 1168
clear bgp ipv6 external (BGP4+ only) 1169
clear bgp ipv6 peer-group (BGP4+ only) 1170
debug bgp (BGP only) 1171
distance (BGP and BGP4+) 1172
exit-address-family 1174
ip community-list 1175
ip community-list expanded 1177
ip community-list standard 1179
ip extcommunity-list expanded 1181
ip extcommunity-list standard 1183
ip prefix-list (IPv4 Prefix List) 1185
ipv6 prefix-list (IPv6 Prefix List) 1187
match as-path 1189
match community 1190
max-paths 1192
neighbor activate 1193
neighbor advertisement-interval 1196
neighbor allowas-in 1199
neighbor as-origination-interval 1202
neighbor attribute-unchanged 1204
neighbor capability graceful-restart 1207
neighbor capability orf prefix-list 1210
neighbor capability route-refresh 1213
neighbor collide-established 1216
neighbor default-originate 1218
neighbor description 1221
neighbor disallow-infinite-holdtime 1224
neighbor dont-capability-negotiate 1226
neighbor ebgp-multihop 1229
neighbor enforce-multihop 1232
neighbor filter-list 1235
neighbor interface 1238
neighbor local-as 1239
neighbor maximum-prefix 1241
neighbor next-hop-self 1244
neighbor override-capability 1247
neighbor passive 1249
neighbor password 1251
neighbor peer-group (add a neighbor) 1255
neighbor peer-group (create a peer-group) 1257
neighbor port 1258
neighbor prefix-list 1260
neighbor remote-as 1263
neighbor remove-private-AS (BGP only) 1266
neighbor restart-time 1268
neighbor route-map 1270
neighbor route-reflector-client (BGP only) 1274
neighbor route-server-client (BGP only) 1276
neighbor send-community 1277

neighbor shutdown 1280
neighbor soft-reconfiguration inbound 1282
neighbor timers 1285
neighbor transparent-as 1288
neighbor transparent-nexthop 1290
neighbor unsuppress-map 1292
neighbor update-source 1295
neighbor version (BGP only) 1298
neighbor weight 1300
network (BGP and BGP4+) 1303
network synchronization 1306
redistribute (into BGP or BGP4+) 1307
restart bgp graceful (BGP only) 1309
router bgp 1310
route-map 1311
set as-path 1314
set community 1315
show bgp ipv6 (BGP4+ only) 1317
show bgp ipv6 community (BGP4+ only) 1318
show bgp ipv6 community-list (BGP4+ only) 1320
show bgp ipv6 dampening (BGP4+ only) 1321
show bgp ipv6 filter-list (BGP4+ only) 1322
show bgp ipv6 inconsistent-as (BGP4+ only) 1323
show bgp ipv6 longer-prefixes (BGP4+ only) 1324
show bgp ipv6 neighbors (BGP4+ only) 1325
show bgp ipv6 paths (BGP4+ only) 1328
show bgp ipv6 prefix-list (BGP4+ only) 1329
show bgp ipv6 quote-regexp (BGP4+ only) 1330
show bgp ipv6 regexp (BGP4+ only) 1331
show bgp ipv6 route-map (BGP4+ only) 1332
show bgp ipv6 summary (BGP4+ only) 1333
show bgp memory maxallocation (BGP only) 1334
show bgp nexthop-tracking (BGP only) 1335
show bgp nexthop-tree-details (BGP only) 1336
show debugging bgp (BGP only) 1337
show ip bgp (BGP only) 1338
show ip bgp attribute-info (BGP only) 1339
show ip bgp cidr-only (BGP only) 1340
show ip bgp community (BGP only) 1341
show ip bgp community-info (BGP only) 1343
show ip bgp community-list (BGP only) 1344
show ip bgp dampening (BGP only) 1345
show ip bgp filter-list (BGP only) 1347
show ip bgp inconsistent-as (BGP only) 1348
show ip bgp longer-prefixes (BGP only) 1349
show ip bgp neighbors (BGP only) 1350
show ip bgp neighbors connection-retrytime (BGP only) 1353
show ip bgp neighbors hold-time (BGP only) 1354
show ip bgp neighbors keepalive (BGP only) 1355
show ip bgp neighbors keepalive-interval (BGP only) 1356
show ip bgp neighbors notification (BGP only) 1357
show ip bgp neighbors open (BGP only) 1358
show ip bgp neighbors rcvd-msgs (BGP only) 1359

show ip bgp neighbors sent-msgs (BGP only) 1360
show ip bgp neighbors update (BGP only) 1361
show ip bgp paths (BGP only) 1362
show ip bgp prefix-list (BGP only) 1363
show ip bgp quote-regexp (BGP only) 1364
show ip bgp regexp (BGP only) 1366
show ip bgp route-map (BGP only) 1368
show ip bgp scan (BGP only) 1369
show ip bgp summary (BGP only) 1370
show ip community-list 1372
show ip extcommunity-list 1373
show ip prefix-list (IPv4 Prefix List) 1374
show ip protocols bgp (BGP only) 1375
show ipv6 prefix-list (IPv6 Prefix List) 1376
show route-map 1377
synchronization 1378
timers (BGP) 1379
undebug bgp (BGP only) 1380

Chapter 30: Route Map Commands 1381

Introduction 1381
match as-path 1383
match community 1384
match interface 1386
match ip address 1387
match ip next-hop 1389
match ipv6 address 1390
match ipv6 next-hop 1391
match metric 1392
match origin 1393
match route-type 1395
match tag 1396
route-map 1397
set aggregator 1400
set as-path 1401
set atomic-aggregate 1402
set comm-list delete 1403
set community 1404
set dampening 1406
set extcommunity 1408
set ip next-hop (route map) 1410
set ipv6 next-hop 1411
set local-preference 1412
set metric 1413
set metric-type 1415
set origin 1416
set originator-id 1417
set tag 1418
set weight 1419
show route-map 1420

Chapter 31: Policy-based Routing Commands 1421

Introduction . . . 1421
debug policy-based-routing . . . 1422
ip policy-route . . . 1423
ipv6 policy-route . . . 1425
policy-based-routing . . . 1427
policy-based-routing enable . . . 1428
show ip pbr route . . . 1429
show ipv6 pbr route . . . 1431
show pbr rules . . . 1433

Chapter 32: VRF-lite Commands . . . 1435
Introduction . . . 1435
address-family . . . 1438
address-family ipv4 (RIP) . . . 1440
arp (IP address MAC) . . . 1441
arp opportunistic-nd . . . 1443
clear arp-cache . . . 1445
clear ip bgp * (BGP only) . . . 1447
clear ip bgp (IPv4) (BGP only) . . . 1449
clear ip rip route . . . 1450
crypto key pubkey-chain knownhosts . . . 1452
default-metric (RIP) . . . 1454
description (VRF) . . . 1455
distance (RIP) . . . 1456
distribute-list (RIP) . . . 1457
export map . . . 1458
fullupdate (RIP) . . . 1459
import map . . . 1460
ip route static inter-vrf . . . 1461
ip route . . . 1462
ip vrf . . . 1465
ip vrf forwarding . . . 1466
max-fib-routes (VRF) . . . 1467
max-static-routes (VRF) . . . 1469
neighbor next-hop-self . . . 1470
neighbor remote-as . . . 1473
neighbor password . . . 1476
network (RIP) . . . 1480
passive-interface (RIP) . . . 1482
ping . . . 1483
rd (route distinguisher) . . . 1485
redistribute (into BGP or BGP4+) . . . 1486
redistribute (OSPF) . . . 1488
redistribute (RIP) . . . 1490
route (RIP) . . . 1492
route-target . . . 1493
router ospf . . . 1495
router-id (VRF) . . . 1497
show arp . . . 1498
show crypto key pubkey-chain knownhosts . . . 1501
show ip bgp cidr-only (BGP only) . . . 1503
show ip bgp community (BGP only) . . . 1504
show ip bgp community-list (BGP only) . . . 1506

show ip bgp dampening (BGP only) 1507
show ip bgp filter-list (BGP only) 1509
show ip bgp inconsistent-as (BGP only) 1510
show ip bgp longer-prefixes (BGP only) 1511
show ip bgp prefix-list (BGP only) 1512
show ip bgp quote-regexp (BGP only) 1513
show ip bgp regexp (BGP only) 1515
show ip bgp route-map (BGP only) 1517
show ip bgp summary (BGP only) 1518
show ip interface vrf 1520
show ip rip vrf database 1522
show ip rip vrf interface 1523
show ip route 1524
show ip route database 1527
show ip route summary 1530
show ip vrf 1532
show ip vrf detail 1533
show ip vrf interface 1534
show running-config vrf 1535
ssh 1536
tcpdump 1538
telnet 1539
timers (RIP) 1540
traceroute 1542
version (RIP) 1543

PART 4: Multicast Applications 1545

Chapter 33: IGMP and IGMP Snooping Commands 1546

Introduction 1546
clear ip igmp 1548
clear ip igmp group 1549
clear ip igmp interface 1550
debug igmp 1551
ip igmp 1552
ip igmp flood specific-query 1553
ip igmp last-member-query-count 1554
ip igmp last-member-query-interval 1555
ip igmp maximum-groups 1556
ip igmp mroute-proxy 1558
ip igmp proxy-service 1559
ip igmp querier-timeout 1560
ip igmp query-holdtime 1561
ip igmp query-interval 1563
ip igmp query-max-response-time 1565
ip igmp ra-option 1567
ip igmp robustness-variable 1568
ip igmp snooping 1569
ip igmp snooping fast-leave 1570
ip igmp snooping mrouter 1571
ip igmp snooping querier 1572
ip igmp snooping report-suppression 1573

ip igmp snooping routermode 1574
ip igmp snooping source-timeout 1576
ip igmp snooping tcn query solicit 1577
ip igmp source-address-check 1579
ip igmp startup-query-count 1580
ip igmp startup-query-interval 1581
ip igmp trusted 1582
ip igmp version 1583
show debugging igmp 1584
show ip igmp groups 1585
show ip igmp interface 1587
show ip igmp proxy 1589
show ip igmp snooping mrouter 1590
show ip igmp snooping routermode 1591
show ip igmp snooping source-timeout 1592
show ip igmp snooping statistics 1593
undebug igmp 1595

Chapter 34: MLD and MLD Snooping Commands 1596

Introduction 1596
clear ipv6 mld 1598
clear ipv6 mld group 1599
clear ipv6 mld interface 1600
debug mld 1601
ipv6 mld 1602
ipv6 mld last-member-query-count 1603
ipv6 mld last-member-query-interval 1604
ipv6 mld querier-timeout 1605
ipv6 mld query-interval 1606
ipv6 mld query-max-response-time 1607
ipv6 mld robustness-variable 1608
ipv6 mld snooping 1609
ipv6 mld snooping fast-leave 1611
ipv6 mld snooping mrouter 1612
ipv6 mld snooping querier 1614
ipv6 mld snooping report-suppression 1615
ipv6 mld ssm-map enable 1617
ipv6 mld static-group 1618
ipv6 mld version 1620
show debugging mld 1621
show ipv6 mld groups 1622
show ipv6 mld interface 1623
show ipv6 mld snooping mrouter 1624
show ipv6 mld snooping statistics 1625

Chapter 35: Multicast Commands 1626

Introduction 1626
clear ip mroute 1628
clear ip mroute statistics 1629
clear ipv6 mroute 1630
clear ipv6 mroute statistics 1631
debug nsm mcast 1632

debug nsm mcast6 1633
ip mroute 1634
ip multicast route 1636
ip multicast route-limit 1638
ip multicast wrong-vif-suppression 1639
ip multicast-routing 1640
ipv6 mroute 1641
ipv6 multicast route 1643
ipv6 multicast route-limit 1645
ipv6 multicast-routing 1646
multicast 1647
show ip mroute 1648
show ip mvif 1650
show ip rpf 1651
show ipv6 mroute 1652
show ipv6 multicast forwarding 1654
show ipv6 mif 1655

Chapter 36: PIM-SM Commands 1656

Introduction 1656
clear ip pim sparse-mode bsr rp-set * 1658
clear ip pim sparse-mode packet statistics 1659
clear ip mroute pim sparse-mode 1660
debug pim sparse-mode 1661
debug pim sparse-mode timer 1662
ip pim anycast-rp 1664
ip pim bsr-border 1665
ip pim bsr-candidate 1666
ip pim cisco-register-checksum 1667
ip pim crp-cisco-prefix 1668
ip pim dr-priority 1669
ip pim exclude-genid 1670
ip pim ext-srcs-directly-connected 1671
ip pim hello-holdtime (PIM-SM) 1672
ip pim hello-interval (PIM-SM) 1673
ip pim ignore-rp-set-priority 1674
ip pim jp-timer 1675
ip pim register-rate-limit 1676
ip pim register-rp-reachability 1677
ip pim register-source 1678
ip pim register-suppression 1679
ip pim rp-address 1680
ip pim rp-candidate 1681
ip pim rp-register-kat 1682
ip pim sparse-mode 1683
ip pim sparse-mode passive 1684
ip pim spt-threshold 1685
ip pim ssm 1686
show debugging pim sparse-mode 1687
show ip pim sparse-mode bsr-router 1688
show ip pim sparse-mode interface 1689
show ip pim sparse-mode interface detail 1691
show ip pim sparse-mode local-members 1692

show ip pim sparse-mode mroute 1693
show ip pim sparse-mode mroute detail 1695
show ip pim sparse-mode neighbor 1697
show ip pim sparse-mode nexthop 1698
show ip pim sparse-mode packet statistics 1699
show ip pim sparse-mode rp-hash 1700
show ip pim sparse-mode rp mapping 1701
undebug all pim sparse-mode 1702

Chapter 37: PIM-SMv6 Commands 1703
Introduction 1703
clear ipv6 mroute pim 1706
clear ipv6 mroute pim sparse-mode 1707
clear ipv6 pim sparse-mode bsr rp-set * 1708
debug ipv6 pim sparse-mode 1709
debug ipv6 pim sparse-mode packet 1711
debug ipv6 pim sparse-mode timer 1712
ipv6 pim anycast-rp 1714
ipv6 pim bsr-border 1716
ipv6 pim bsr-candidate 1718
ipv6 pim cisco-register-checksum 1720
ipv6 pim crp-cisco-prefix 1721
ipv6 pim dr-priority 1722
ipv6 pim exclude-genid 1724
ipv6 pim ext-srcs-directly-connected 1725
ipv6 pim hello-holdtime 1726
ipv6 pim hello-interval 1727
ipv6 pim ignore-rp-set-priority 1728
ipv6 pim jp-timer 1729
ipv6 pim neighbor-filter 1730
ipv6 pim register-rate-limit 1731
ipv6 pim register-rp-reachability 1732
ipv6 pim register-source 1733
ipv6 pim register-suppression 1734
ipv6 pim rp-address 1735
ipv6 pim rp-candidate 1737
ipv6 pim rp embedded 1738
ipv6 pim rp-register-kat 1739
ipv6 pim sparse-mode 1740
ipv6 pim sparse-mode passive 1741
ipv6 pim spt-threshold 1742
ipv6 pim ssm 1743
ipv6 pim unicast-bsm 1744
show debugging ipv6 pim sparse-mode 1745
show ipv6 pim sparse-mode bsr-router 1746
show ipv6 pim sparse-mode interface 1747
show ipv6 pim sparse-mode interface detail 1749
show ipv6 pim sparse-mode local-members 1750
show ipv6 pim sparse-mode mroute 1752
show ipv6 pim sparse-mode mroute detail 1754
show ipv6 pim sparse-mode neighbor 1756
show ipv6 pim sparse-mode nexthop 1757
show ipv6 pim sparse-mode rp-hash 1758

show ipv6 pim sparse-mode rp mapping 1759
show ipv6 pim sparse-mode rp nexthop 1760
undebug all ipv6 pim sparse-mode 1762
undebug ipv6 pim sparse-mode 1763

PART 5: Access and Security 1765

Chapter 38: Traffic Control Commands 1766
Introduction 1766
class (htb) 1768
class (priority) 1770
class (wrr) 1772
debug traffic-control 1774
interface (traffic-control) 1775
l3-filtering enable 1776
move rule (traffic-control) 1777
policy (traffic-control) 1778
red-curve 1780
rule (traffic-control) 1782
show debugging traffic-control 1784
show running-config traffic-control 1785
show traffic-control counters 1787
show traffic-control interface 1789
show traffic-control policy 1791
show traffic-control red-curve 1793
show traffic-control rule config-check 1795
show traffic-control rule 1796
show traffic-control 1797
sub-class (htb) 1798
sub-class (priority) 1800
sub-class (wrr) 1802
sub-sub-class (htb) 1804
sub-sub-class (priority) 1806
sub-sub-class (wrr) 1808
traffic-control enable 1810
traffic-control 1811

Chapter 39: Authentication Commands 1813
Introduction 1813
auth critical 1816
auth host-mode 1817
auth log 1819
auth max-supplicant 1821
auth profile (Global Configuration) 1823
auth profile (Interface Configuration) 1824
auth reauthentication 1825
auth supplicant-ip 1826
auth supplicant-mac 1828
auth timeout connect-timeout 1831
auth timeout quiet-period 1832
auth timeout reauth-period 1833
auth timeout server-timeout 1835

auth-web accounting 1836
auth-web authentication 1837
auth-web enable 1838
auth-web forward 1840
auth-web idle-timeout enable 1843
auth-web idle-timeout timeout 1844
auth-web max-auth-fail 1845
auth-web method 1847
auth-web-server dhcp ipaddress 1848
auth-web-server dhcp lease 1849
auth-web-server dhcp-wpad-option 1850
auth-web-server host-name 1851
auth-web-server intercept-port 1852
auth-web-server ipaddress 1853
auth-web-server page language 1854
auth-web-server login-url 1855
auth-web-server page logo 1856
auth-web-server page sub-title 1857
auth-web-server page success-message 1858
auth-web-server page title 1859
auth-web-server page welcome-message 1860
auth-web-server ping-poll enable 1861
auth-web-server ping-poll failcount 1862
auth-web-server ping-poll interval 1863
auth-web-server ping-poll reauth-timer-refresh 1864
auth-web-server ping-poll timeout 1865
auth-web-server port 1866
auth-web-server redirect-delay-time 1867
auth-web-server redirect-url 1868
auth-web-server session-keep 1869
auth-web-server ssl 1870
auth-web-server ssl intercept-port 1871
copy proxy-autoconfig-file 1872
copy web-auth-https-file 1873
description (Authentication Profile) 1874
erase proxy-autoconfig-file 1875
erase web-auth-https-file 1876
show auth 1877
show auth diagnostics 1878
show auth interface 1879
show auth sessionstatistics 1882
show auth statistics interface 1883
show auth supplicant 1884
show auth supplicant interface 1887
show auth-web-server 1888
show auth-web-server page 1889
show proxy-autoconfig-file 1890

Chapter 40: AAA Commands 1891

Introduction 1891
aaa accounting auth-web 1893
aaa accounting commands 1895
aaa accounting login 1897

aaa authentication auth-web 1900
aaa authentication enable default group tacacs+ 1902
aaa authentication enable default local 1904
aaa authentication login 1905
aaa authentication openvpn 1907
aaa authorization commands 1908
aaa authorization config-commands 1910
aaa group server 1911
aaa local authentication attempts lockout-time 1912
aaa local authentication attempts max-fail 1913
aaa login fail-delay 1914
accounting login 1915
authorization commands 1916
clear aaa local user lockout 1918
debug aaa 1919
login authentication 1920
proxy-port 1921
radius-secure-proxy aaa 1922
server (radsecproxy-aaa) 1923
server mutual-authentication 1925
server name-check 1926
server trustpoint 1927
show aaa local user locked 1929
show aaa server group 1930
show debugging aaa 1931
show radius server group 1932
undebug aaa 1934

Chapter 41: RADIUS Commands 1935
Introduction 1935
deadtime (RADIUS server group) 1936
debug radius 1937
ip radius source-interface 1938
radius-server deadtime 1939
radius-server host 1940
radius-server key 1943
radius-server retransmit 1944
radius-server timeout 1946
server (Server Group) 1948
show debugging radius 1950
show radius 1951
undebug radius 1954

Chapter 42: Local RADIUS Server Commands 1955
Introduction 1955
attribute 1957
authentication 1960
client (radsecproxy-srv) 1961
client mutual-authentication 1963
client name-check 1964
client trustpoint 1965
clear radius local-server statistics 1966

copy fdb-radius-users (to file) . . . 1967
copy local-radius-user-db (from file) . . . 1969
copy local-radius-user-db (to file) . . . 1970
crypto pki enroll local (deleted) . . . 1971
crypto pki enroll local local-radius-all-users (deleted) . . . 1972
crypto pki enroll local user (deleted) . . . 1973
crypto pki export local pem (deleted) . . . 1974
crypto pki export local pkcs12 (deleted) . . . 1975
crypto pki trustpoint local (deleted) . . . 1976
debug crypto pki (deleted) . . . 1977
domain-style . . . 1978
egress-vlan-id . . . 1979
egress-vlan-name . . . 1980
group . . . 1981
nas . . . 1982
radius-secure-proxy local-server . . . 1983
radius-server local . . . 1984
server auth-port . . . 1985
server enable . . . 1986
show crypto pki certificates (deleted) . . . 1987
show crypto pki certificates local-radius-all-users (deleted) . . . 1988
show crypto pki certificates user (deleted) . . . 1989
show crypto pki trustpoints (deleted) . . . 1990
show radius local-server group . . . 1991
show radius local-server nas . . . 1992
show radius local-server statistics . . . 1993
show radius local-server user . . . 1994
user (RADIUS server) . . . 1996
vlan (RADIUS server) . . . 1998

Chapter 43: Public Key Infrastructure Commands . . . 1999

Introduction . . . 1999
crypto key generate rsa . . . 2000
crypto key zeroize . . . 2001
crypto pki authenticate . . . 2002
crypto pki enroll . . . 2003
crypto pki enroll user . . . 2004
crypto pki export pem . . . 2006
crypto pki export pkcs12 . . . 2007
crypto pki import pem . . . 2009
crypto pki import pkcs12 . . . 2011
crypto pki trustpoint . . . 2012
enrollment (trustpoint configuration mode) . . . 2013
fingerprint (trustpoint configuration mode) . . . 2014
no crypto pki certificate . . . 2016
rsakeypair (trustpoint configuration mode) . . . 2017
show crypto key mypubkey rsa . . . 2018
show crypto pki certificates . . . 2019
show crypto pki enrollment user . . . 2021
show crypto pki trustpoint . . . 2022
subject-name (trustpoint configuration) . . . 2023

Chapter 44: TACACS+ Commands 2025
Introduction 2025
authorization commands 2026
aaa authorization commands 2028
aaa authorization config-commands 2030
ip tacacs source-interface 2031
show tacacs+ 2032
tacacs-server host 2034
tacacs-server key 2036
tacacs-server timeout 2037

PART 6: High Availability 2038

Chapter 45: High Availability Commands 2039
Introduction 2039
ha associate 2040

Chapter 46: VRRP Commands 2042
Introduction 2042
advertisement-interval 2044
alternate-checksum-mode 2046
circuit-failover 2047
debug vrrp 2049
debug vrrp events 2050
debug vrrp packet 2051
disable (VRRP) 2052
enable (VRRP) 2053
preempt-mode 2054
priority 2056
router ipv6 vrrp (interface) 2058
router vrrp (interface) 2060
show debugging vrrp 2062
show running-config router ipv6 vrrp 2063
show running-config router vrrp 2064
show vrrp 2065
show vrrp counters 2067
show vrrp ipv6 2070
show vrrp (session) 2071
transition-mode 2073
undebug vrrp 2075
undebug vrrp events 2076
undebug vrrp packet 2077
virtual-ip 2078
virtual-ipv6 2080
vrrp vmac 2082

PART 7: Network Management 2083

Chapter 47: Allied Telesis Management Framework™ (AMF) Commands 2084
Introduction 2084
area-link 2089

atmf area 2091
atmf area password 2093
atmf authorize 2095
atmf authorize provision 2097
atmf backup 2099
atmf backup area-masters delete 2100
atmf backup area-masters enable 2101
atmf backup area-masters now 2102
atmf backup area-masters synchronize 2103
atmf backup bandwidth 2104
atmf backup delete 2105
atmf backup enable 2106
atmf backup guests delete 2107
atmf backup guests enable 2108
atmf backup guests now 2109
atmf backup guests synchronize 2110
atmf backup now 2111
atmf backup redundancy enable 2113
atmf backup server 2114
atmf backup stop 2116
atmf backup synchronize 2117
atmf cleanup 2118
atmf container 2119
atmf container login 2120
atmf controller 2121
atmf distribute firmware 2122
atmf domain vlan 2124
atmf enable 2127
atmf group (membership) 2128
atmf guest-class 2130
atmf log-verbose 2132
atmf management subnet 2133
atmf management vlan 2136
atmf master 2138
atmf mtu 2139
atmf network-name 2140
atmf provision 2141
atmf provision node clone 2142
atmf provision node configure boot config 2144
atmf provision node configure boot system 2145
atmf provision node create 2146
atmf provision node delete 2148
atmf provision node license-cert 2150
atmf provision node locate 2152
atmf reboot-rolling 2153
atmf recover 2157
atmf recover guest 2159
atmf recover led-off 2160
atmf remote-login 2161
atmf restricted-login 2163
atmf secure-mode 2165
atmf secure-mode certificate expire 2167
atmf secure-mode certificate expiry 2168

atmf secure-mode certificate renew 2169
atmf secure-mode enable-all 2170
atmf select-area 2172
atmf topology-gui enable 2173
atmf virtual-crosslink 2174
atmf virtual-link 2176
atmf working-set 2178
bridge-group 2180
clear atmf links statistics 2181
clear atmf secure-mode certificates 2182
clear atmf secure-mode statistics 2183
debug atmf 2184
debug atmf packet 2186
discovery 2189
description (amf container) 2191
erase factory-default 2192
http-enable 2193
log event-host 2195
modeltype 2196
show atmf 2197
show atmf area 2201
show atmf area guests 2204
show atmf area guests-detail 2206
show atmf area nodes 2208
show atmf area nodes-detail 2210
show atmf area summary 2212
show atmf authorization 2213
show atmf backup 2216
show atmf backup area 2220
show atmf backup guest 2222
show atmf container 2224
show atmf detail 2227
show atmf group 2229
show atmf group members 2231
show atmf guests 2233
show atmf guests detail 2235
show atmf links 2238
show atmf links detail 2240
show atmf links guest 2249
show atmf links guest detail 2251
show atmf links statistics 2255
show atmf nodes 2258
show atmf provision nodes 2260
show atmf secure-mode 2261
show atmf secure-mode audit 2263
show atmf secure-mode audit link 2264
show atmf secure-mode certificates 2265
show atmf secure-mode sa 2268
show atmf secure-mode statistics 2271
show atmf tech 2273
show atmf virtual-links 2276
show atmf working-set 2278
show debugging atmf 2279

show debugging atmf packet 2280
show running-config atmf 2281
state 2282
switchport atmf-agentlink 2284
switchport atmf-arealink remote-area 2285
switchport atmf-crosslink 2287
switchport atmf-guestlink 2289
switchport atmf-link 2291
type atmf node 2292
undebug atmf 2295
username 2296

Chapter 48: Dynamic Host Configuration Protocol (DHCP) Commands 2298
Introduction 2298
bootfile 2300
clear ip dhcp binding 2301
default-router 2302
dns-server 2303
domain-name 2304
host (DHCP) 2305
ip address dhcp 2306
ip dhcp bootp ignore 2308
ip dhcp leasequery enable 2309
ip dhcp option 2310
ip dhcp pool 2312
ip dhcp-client default-route distance 2313
ip dhcp-relay agent-option 2315
ip dhcp-relay agent-option checking 2317
ip dhcp-relay agent-option remote-id 2319
ip dhcp-relay information policy 2321
ip dhcp-relay maxhops 2323
ip dhcp-relay max-message-length 2324
ip dhcp-relay server-address 2326
lease 2328
network (DHCP) 2330
next-server 2331
option 2332
probe enable 2334
probe packets 2335
probe timeout 2336
probe type 2337
range 2338
route 2339
service dhcp-relay 2340
service dhcp-server 2341
show counter dhcp-client 2342
show counter dhcp-relay 2343
show counter dhcp-server 2347
show dhcp lease 2349
show ip dhcp binding 2351
show ip dhcp pool 2353
show ip dhcp-relay 2357
show ip dhcp server statistics 2359

show ip dhcp server summary . . . 2361
subnet-mask . . . 2362

Chapter 49: DHCP for IPv6 (DHCPv6) Commands . . . 2363
Introduction . . . 2363
address prefix . . . 2365
address range . . . 2367
clear counter ipv6 dhcp-client . . . 2369
clear counter ipv6 dhcp-server . . . 2370
clear ipv6 dhcp binding . . . 2371
clear ipv6 dhcp client . . . 2373
dns-server (DHCPv6) . . . 2374
domain-name (DHCPv6) . . . 2376
ipv6 address (DHCPv6 PD) . . . 2377
ipv6 address dhcp . . . 2380
ipv6 dhcp client pd . . . 2382
ipv6 dhcp option . . . 2384
ipv6 dhcp pool . . . 2386
ipv6 dhcp server . . . 2388
ipv6 local pool . . . 2389
ipv6 nd prefix (DHCPv6) . . . 2391
link-address . . . 2393
option (DHCPv6) . . . 2395
prefix-delegation pool . . . 2397
show counter ipv6 dhcp-client . . . 2399
show counter ipv6 dhcp-server . . . 2401
show ipv6 dhcp . . . 2403
show ipv6 dhcp binding . . . 2404
show ipv6 dhcp interface . . . 2407
show ipv6 dhcp pool . . . 2409
sntp-address . . . 2411

Chapter 50: NTP Commands . . . 2412
Introduction . . . 2412
ntp authenticate . . . 2413
ntp authentication-key . . . 2414
ntp broadcastdelay . . . 2415
ntp discard . . . 2416
ntp master . . . 2417
ntp peer . . . 2418
ntp restrict . . . 2420
ntp server . . . 2422
ntp source . . . 2424
ntp trusted-key (deprecated) . . . 2426
show counter ntp (deprecated) . . . 2427
show ntp associations . . . 2428
show ntp counters . . . 2430
show ntp counters associations . . . 2432
show ntp status . . . 2434

Chapter 51: SNMP Commands . . . 2435
Introduction . . . 2435

debug snmp 2437
show counter snmp-server 2438
show debugging snmp 2442
show running-config snmp 2443
show snmp-server 2444
show snmp-server community 2445
show snmp-server group 2446
show snmp-server user 2447
show snmp-server view 2448
snmp trap link-status 2449
snmp trap link-status suppress 2451
snmp-server 2453
snmp-server community 2455
snmp-server contact 2456
snmp-server enable trap 2457
snmp-server engineID local 2459
snmp-server engineID local reset 2461
snmp-server group 2462
snmp-server host 2464
snmp-server legacy-ifadminstatus 2466
snmp-server location 2467
snmp-server source-interface 2468
snmp-server startup-trap-delay 2469
snmp-server user 2470
snmp-server view 2473
undebug snmp 2474

Chapter 52: SMTP Commands 2475
Introduction 2475
debug mail 2476
delete mail 2477
mail 2478
show counter mail 2479
show mail 2480
undebug mail 2481

Chapter 53: Secure Shell (SSH) Commands 2482
Introduction 2482
banner login (SSH) 2484
clear ssh 2485
crypto key destroy hostkey 2486
crypto key destroy userkey 2487
crypto key generate hostkey 2488
crypto key generate userkey 2490
crypto key pubkey-chain knownhosts 2491
crypto key pubkey-chain userkey 2493
debug ssh client 2495
debug ssh server 2496
service ssh 2497
show banner login 2499
show crypto key hostkey 2500
show crypto key pubkey-chain knownhosts 2502

show crypto key pubkey-chain userkey 2504
show crypto key userkey 2505
show running-config ssh 2506
show ssh 2508
show ssh client 2510
show ssh server 2511
show ssh server allow-users 2513
show ssh server deny-users 2514
ssh 2515
ssh client 2517
ssh server 2519
ssh server allow-users 2521
ssh server authentication 2523
ssh server deny-users 2525
ssh server max-auth-tries 2527
ssh server resolve-host 2528
ssh server scp 2529
ssh server sftp 2530
undebug ssh client 2531
undebug ssh server 2532

Chapter 54: Trigger Commands 2533
Introduction 2533
active (trigger) 2535
day 2536
debug trigger 2538
description (trigger) 2539
repeat 2540
script 2541
show debugging trigger 2543
show running-config trigger 2544
show trigger 2545
test 2550
time (trigger) 2551
trap 2553
trigger 2554
trigger activate 2555
type atmf node 2556
type cpu 2559
type interface 2560
type memory 2561
type periodic 2562
type ping-poll 2563
type reboot 2564
type time 2565
type usb 2566
undebug trigger 2567

Chapter 55: Ping-Polling Commands 2568
Introduction 2568
active (ping-polling) 2570
clear ping-poll 2571

critical-interval . . . 2572
debug ping-poll . . . 2573
description (ping-polling) . . . 2574
fail-count . . . 2575
ip (ping-polling) . . . 2576
length (ping-poll data) . . . 2577
normal-interval . . . 2578
ping-poll . . . 2579
sample-size . . . 2580
show counter ping-poll . . . 2582
show ping-poll . . . 2584
source-ip . . . 2588
timeout (ping polling) . . . 2590
up-count . . . 2591
undebug ping-poll . . . 2592

PART 8: Firewall and Network Address Translation (NAT) . . . 2593

Chapter 56: Firewall Commands . . . 2594

Introduction . . . 2594
clear firewall connections . . . 2596
connection-limit (Firewall) . . . 2597
connection-log events . . . 2598
firewall . . . 2599
debug firewall . . . 2600
ip tcp timeout established . . . 2601
move rule (Firewall) . . . 2602
protect (Firewall) . . . 2603
rule (Firewall) . . . 2604
show connection-log events . . . 2606
show firewall . . . 2607
show firewall connections . . . 2608
show firewall connections limits . . . 2609
show firewall connections limits config-check . . . 2610
show firewall rule . . . 2611
show firewall rule config-check . . . 2613
show debugging firewall . . . 2614
show running-config firewall . . . 2615

Chapter 57: Application and Entity Commands . . . 2616

Introduction . . . 2616
application . . . 2618
dport . . . 2620
dscp . . . 2622
host (Entity) . . . 2624
icmp-code . . . 2626
icmp-type . . . 2628
ip address (Entity) . . . 2630
ip subnet . . . 2632
ipv6 address (Entity) . . . 2634
ipv6 subnet . . . 2636
network (Entity) . . . 2638

protocol 2640
show application 2642
show application detail 2643
show entity 2646
sport 2648
zone 2650

Chapter 58: NAT Commands 2652
Introduction 2652
enable (NAT) 2654
ip limited-local-proxy-arp 2655
local-proxy-arp 2657
move rule (NAT) 2658
nat 2659
rule (NAT) 2660
show nat 2664
show nat rule 2665
show nat rule config-check 2667
show running-config nat 2668

PART 9: Advanced Network Protection 2669

Chapter 59: IPS Commands 2670
Introduction 2670
category action (IPS) 2671
ips 2672
protect (IPS) 2673
show ips 2674
show ips categories 2675
show running-config ips 2677

Chapter 60: URL Filtering Commands 2678
Introduction 2678
blacklist 2680
log url-requests 2681
protect (URL filtering) 2682
show running-config url-filter 2683
show url-filter 2684
url-filter reload custom-lists 2685
url-filter 2686
whitelist 2687

PART 10: Virtual Private Networks (VPNs) 2688

Chapter 61: IPsec Commands 2689
Introduction 2689
clear isakmp sa 2691
crypto ipsec profile 2692
crypto isakmp key 2694
crypto isakmp peer 2696
crypto isakmp profile 2698

debug isakmp 2700
dpd-interval 2702
dpd-timeout 2703
interface tunnel 2704
lifetime (IPsec Profile) 2705
lifetime (ISAKMP Profile) 2706
no debug isakmp 2707
pfs 2708
show debugging isakmp 2710
show interface tunnel (IPsec) 2711
show ipsec counters 2712
show ipsec peer 2713
show ipsec policy 2714
show ipsec profile 2715
show ipsec sa 2717
show isakmp counters 2718
show isakmp key (IPsec) 2719
show isakmp peer 2720
show isakmp profile 2721
show isakmp sa 2723
transform (IPsec Profile) 2724
transform (ISAKMP Profile) 2725
tunnel destination (IPsec) 2727
tunnel local name (IPsec) 2729
tunnel local selector 2730
tunnel mode (IPsec) 2732
tunnel protection ipsec (IPsec) 2733
tunnel remote name (IPsec) 2734
tunnel remote selector 2735
tunnel source (IPsec) 2737
undebug isakmp 2739
version (ISAKMP) 2740

Chapter 62: GRE Tunneling Commands 2741

Introduction 2741
crypto isakmp key 2742
interface tunnel 2744
ip address (GRE) 2745
ip tcp adjust-mss 2747
ipv6 address (GRE) 2749
ipv6 tcp adjust-mss 2751
show interface tunnel (GRE) 2753
show isakmp key (GRE) 2754
tunnel checksum 2755
tunnel dscp 2756
tunnel destination (GRE) 2757
tunnel local name (GRE) 2759
tunnel mode (GRE) 2760
tunnel protection ipsec (GRE) 2761
tunnel remote name (GRE) 2762
tunnel source (GRE) 2763
tunnel ttl 2765

Chapter 63: OpenVPN Commands 2766
Introduction 2766
ip tcp adjust-mss 2768
ipv6 tcp adjust-mss 2770
show interface tunnel (OpenVPN) 2772
show openvpn connections 2773
show openvpn connections detail 2774
tunnel openvpn authentication 2775
tunnel openvpn cipher 2776
tunnel mode openvpn tap 2778
tunnel mode openvpn tun 2779
tunnel openvpn expiry-bytes 2780
tunnel openvpn expiry-seconds 2781
tunnel openvpn port 2782
tunnel openvpn tagging 2783

Chapter 64: L2TP Commands 2784
Introduction 2784
crypto isakmp key 2786
debug l2tp 2788
destination 2789
encapsulation ppp 2790
ip-version 2792
l2tp tunnel 2793
l2tp unmanaged port 2795
l2tp-profile 2796
local-subaddress 2797
protection ipsec 2798
protection local-name 2799
protection profile 2801
protection remote-name 2802
remote-subaddress 2804
shared-secret 2805
show debugging l2tp 2806
show interface tunnel (L2TPv3) 2807
show isakmp key (L2TPv3) 2808
show l2tp session 2809
show l2tp tunnel 2811
show l2tp tunnel config-check 2815
show running-config l2tp-profile 2817
show running-config l2tp-tunnel 2818
source 2819
tunnel local id 2820
tunnel mode (L2TPv3) 2821
tunnel protection ipsec 2822
tunnel remote id 2823
version 2824

List of Commands

aaa accounting auth-web 1893
aaa accounting commands 1895
aaa accounting login 1897
aaa authentication auth-web 1900
aaa authentication enable default group tacacs+ 1902
aaa authentication enable default local 1904
aaa authentication login 1905
aaa authentication openvpn 1907
aaa authorization commands 1908
aaa authorization commands 2028
aaa authorization config-commands 1910
aaa authorization config-commands 2030
aaa group server 1911
aaa local authentication attempts lockout-time 1912
aaa local authentication attempts max-fail 1913
aaa login fail-delay 1914
abr-type 1008
accept-lifetime 814
accounting login 1915
activate 365
active (ping-polling) 2570
active (trigger) 2535
address prefix 2365
address range 2367
address-family ipv4 (RIP) 1440

address-family ipv4 (RIP) 816
address-family 1105
address-family 1438
advertisement-interval 2044
ageing-time 450
aggregate-address (IPv6 RIPng) 875
aggregate-address 1107
alliedware-behavior 817
alternate-checksum-mode 2046
apn 390
application 2618
area authentication ipsec spi 1009
area authentication 903
area default-cost (IPv6 OSPF) 1011
area default-cost 902
area encryption ipsec spi esp 1012
area filter-list 904
area nssa 905
area range (IPv6 OSPF) 1015
area range 907
area stub (IPv6 OSPF) 1017
area stub 909
area virtual-link (IPv6 OSPF) 1018
area virtual-link authentication ipsec spi 1020
area virtual-link encryption ipsec spi 1022
area virtual-link 910
area-link 2089
arp (IP address MAC) 1441
arp (IP address MAC) 649
arp log 651
arp opportunistic-nd 1443
arp opportunistic-nd 654
arp-aging-timeout 648
arp-reply-bc-dmac 656
atmf area password 2093

atmf area 2091
atmf authorize provision 2097
atmf authorize 2095
atmf backup area-masters delete 2100
atmf backup area-masters enable 2101
atmf backup area-masters now 2102
atmf backup area-masters synchronize 2103
atmf backup bandwidth 2104
atmf backup delete 2105
atmf backup enable 2106
atmf backup guests delete 2107
atmf backup guests enable 2108
atmf backup guests now 2109
atmf backup guests synchronize 2110
atmf backup now 2111
atmf backup redundancy enable 2113
atmf backup server 2114
atmf backup stop 2116
atmf backup synchronize 2117
atmf backup 2099
atmf cleanup 2118
atmf container login 2120
atmf container 2119
atmf controller 2121
atmf distribute firmware 2122
atmf domain vlan 2124
atmf enable 2127
atmf group (membership) 2128
atmf guest-class 2130
atmf log-verbose 2132
atmf management subnet 2133
atmf management vlan 2136
atmf master 2138
atmf mtu 2139
atmf network-name 2140

atmf provision node clone 2142
atmf provision node configure boot config 2144
atmf provision node configure boot system 2145
atmf provision node create 2146
atmf provision node delete 2148
atmf provision node license-cert 2150
atmf provision node locate 2152
atmf provision 2141
atmf reboot-rolling 2153
atmf recover guest 2159
atmf recover led-off 2160
atmf recover 2157
atmf remote-login 2161
atmf restricted-login 2163
atmf secure-mode certificate expire 2167
atmf secure-mode certificate expiry 2168
atmf secure-mode certificate renew 2169
atmf secure-mode enable-all 2170
atmf secure-mode 2165
atmf select-area 2172
atmf topology-gui enable 202
atmf topology-gui enable 2173
atmf virtual-crosslink 2174
atmf virtual-link 2176
atmf working-set 2178
attribute 1957
auth critical 1816
auth host-mode 1817
auth log 1819
auth max-supplicant 1821
auth profile (Global Configuration) 1823
auth profile (Interface Configuration) 1824
auth reauthentication 1825
auth supplicant-ip 1826
auth supplicant-mac 1828

auth timeout connect-timeout 1831
auth timeout quiet-period 1832
auth timeout reauth-period 1833
auth timeout server-timeout 1835
authentication 1960
authorization commands 1916
authorization commands 2026
auth-web accounting 1836
auth-web authentication 1837
auth-web enable 1838
auth-web forward 1840
auth-web idle-timeout enable 1843
auth-web idle-timeout timeout 1844
auth-web max-auth-fail 1845
auth-web method 1847
auth-web-server dhcp ipaddress 1848
auth-web-server dhcp lease 1849
auth-web-server dhcp-wpad-option 1850
auth-web-server host-name 1851
auth-web-server intercept-port 1852
auth-web-server ipaddress 1853
auth-web-server login-url 1855
auth-web-server page language 1854
auth-web-server page logo 1856
auth-web-server page sub-title 1857
auth-web-server page success-message 1858
auth-web-server page title 1859
auth-web-server page welcome-message 1860
auth-web-server ping-poll enable 1861
auth-web-server ping-poll failcount 1862
auth-web-server ping-poll interval 1863
auth-web-server ping-poll reauth-timer-refresh 1864
auth-web-server ping-poll timeout 1865
auth-web-server port 1866
auth-web-server redirect-delay-time 1867

auth-web-server redirect-url 1868
auth-web-server session-keep 1869
auth-web-server ssl intercept-port 1871
auth-web-server ssl 1870
autoboot enable 110
auto-cost reference bandwidth (IPv6 OSPF) 1025
auto-cost reference bandwidth 913
auto-summary (BGP only) 1110
backpressure 415
bandwidth 1027
bandwidth 915
banner exec 213
banner login (SSH) 2484
banner login (system) 215
banner motd 217
bgp aggregate-nexthop-check 1111
bgp always-compare-med 1112
bgp bestpath as-path ignore 1113
bgp bestpath compare-confed-aspath 1114
bgp bestpath compare-routerid 1115
bgp bestpath med remove-recv-med 1118
bgp bestpath med remove-send-med 1119
bgp bestpath med 1116
bgp client-to-client reflection 1120
bgp cluster-id 1121
bgp confederation identifier 1123
bgp confederation peers 1124
bgp config-type 1126
bgp dampening 1128
bgp damp-peer-oscillation (BGP only) 1130
bgp default ipv4-unicast 1131
bgp default local-preference (BGP only) 1132
bgp deterministic-med 1133
bgp enforce-first-as 1135
bgp fast-external-failover 1136

bgp graceful-restart graceful-reset 1139
bgp graceful-restart 1137
bgp log-neighbor-changes 1140
bgp memory maxallocation....1142
bgp nexthop-trigger delay....1144
bgp nexthop-trigger enable 1145
bgp nexthop-trigger-count 1143
bgp rfc1771-path-select (BGP only)....1146
bgp rfc1771-strict (BGP only)....1147
bgp router-id....1148
bgp scan-time (BGP only) 1149
bgp update-delay 1150
blacklist 2680
boot config-file backup 112
boot config-file....111
boot system backup 114
boot system 113
bootfile 2300
bridge....451
bridge-group....2180
bridge-group....452
capability opaque 916
capability restart....917
category action (IPS)....2671
cd....115
channel-group 551
chat-script....392
circuit-failover....2047
cisco-metric-behavior (RIP)....819
class (htb) 1768
class (priority) 1770
class (wrr) 1772
clear aaa local user lockout....1918
clear arp-cache 1445
clear arp-cache 657

clear atmf links statistics 2181
clear atmf secure-mode certificates 2182
clear atmf secure-mode statistics....2183
clear bgp (ASN)....1154
clear bgp (IPv4 or IPv6 address) 1152
clear bgp * 1151
clear bgp external 1155
clear bgp ipv6 (ASN) (BGP4+ only)....1168
clear bgp ipv6 (ipv6 address) (BGP4+ only) 1165
clear bgp ipv6 dampening (BGP4+ only)....1166
clear bgp ipv6 external (BGP4+ only) 1169
clear bgp ipv6 flap-statistics (BGP4+ only) 1167
clear bgp ipv6 peer-group (BGP4+ only)....1170
clear bgp peer-group 1156
clear counter ipv6 dhcp-client....2369
clear counter ipv6 dhcp-server 2370
clear exception log 271
clear firewall connections 2596
clear ip bgp (ASN) (BGP only)....1162
clear ip bgp (IPv4) (BGP only)....1159
clear ip bgp (IPv4) (BGP only)....1449
clear ip bgp * (BGP only) 1157
clear ip bgp * (BGP only) 1447
clear ip bgp dampening (BGP only)....1160
clear ip bgp external (BGP only) 1163
clear ip bgp flap-statistics (BGP only) 1161
clear ip bgp peer-group (BGP only)....1164
clear ip dhcp binding 2301
clear ip dns forwarding cache 703
clear ip igmp group....1549
clear ip igmp interface 1550
clear ip igmp 1548
clear ip mroute pim sparse-mode 1660
clear ip mroute statistics 1629
clear ip mroute 1628

clear ip ospf process 918
clear ip pim sparse-mode bsr rp-set * 1658
clear ip pim sparse-mode packet statistics 1659
clear ip rip route 1450
clear ip rip route 820
clear ipv6 dhcp binding 2371
clear ipv6 dhcp client 2373
clear ipv6 mld group 1599
clear ipv6 mld interface 1600
clear ipv6 mld 1598
clear ipv6 mroute pim sparse-mode 1707
clear ipv6 mroute pim 1706
clear ipv6 mroute statistics 1631
clear ipv6 mroute 1630
clear ipv6 neighbors 754
clear ipv6 ospf process 1028
clear ipv6 pim sparse-mode bsr rp-set * 1708
clear ipv6 rip route 876
clear isakmp sa 2691
clear lacp counters 553
clear line console 163
clear line vty 164
clear log buffered 273
clear log external 274
clear log permanent 275
clear log 272
clear mac address-table dynamic 417
clear mac address-table static 419
clear mac-filter 453
clear ping-poll 2571
clear port counter 420
clear pppoe-ac statistics 620
clear radius local-server statistics 1966
clear spanning-tree detected protocols (RSTP and MSTP) 478
clear spanning-tree statistics 477

clear ssh....2485
clear test interface....408
client (radsecproxy-srv)....1961
client mutual-authentication....1963
client name-check....1964
client trustpoint....1965
clock set....219
clock summer-time date....220
clock summer-time recurring....222
clock timezone....224
compatible rfc1583....919
configure terminal....97
connection-limit (Firewall)....2597
connection-log events....2598
connection-log events....276
copy (filename)....116
copy buffered-log....277
copy current-software....118
copy debug....119
copy fdb-radius-users (to file)....1967
copy local-radius-user-db (from file)....1969
copy local-radius-user-db (to file)....1970
copy permanent-log....278
copy proxy-autoconfig-file....1872
copy running-config....120
copy startup-config....121
copy web-auth-https-file....1873
copy zmodem....122
create autoboot....123
critical-interval....2572
crypto ipsec profile....2692
crypto isakmp key....2694
crypto isakmp key....2742
crypto isakmp key....2786
crypto isakmp peer....2696

crypto isakmp profile 2698
crypto key destroy hostkey....2486
crypto key destroy userkey....2487
crypto key generate hostkey 2488
crypto key generate rsa 2000
crypto key generate userkey 2490
crypto key pubkey-chain knownhosts 1452
crypto key pubkey-chain knownhosts 2491
crypto key pubkey-chain userkey....2493
crypto key zeroize 2001
crypto pki authenticate 2002
crypto pki enroll local (deleted) 1971
crypto pki enroll local local-radius-all-users (deleted) 1972
crypto pki enroll local user (deleted)....1973
crypto pki enroll user 2004
crypto pki enroll 2003
crypto pki export local pem (deleted) 1974
crypto pki export local pkcs12 (deleted) 1975
crypto pki export pem 2006
crypto pki export pkcs12....2007
crypto pki import pem 2009
crypto pki import pkcs12....2011
crypto pki trustpoint local (deleted) 1976
crypto pki trustpoint....2012
day....2536
ddns enable 704
ddns-update now 706
ddns-update-method....705
deadtime (RADIUS server group) 1936
debug aaa....1919
debug atmf packet 2186
debug atmf....2184
debug bgp (BGP only) 1171
debug crypto pki (deleted)....1977
debug ddns 707

debug firewall 2600
debug igmp 1551
debug ip dns forwarding 708
debug ip packet interface 659
debug ipv6 ospf events 1029
debug ipv6 ospf ifsm 1030
debug ipv6 ospf lsa 1031
debug ipv6 ospf nfsm 1032
debug ipv6 ospf packet 1033
debug ipv6 ospf route 1034
debug ipv6 pim sparse-mode packet 1711
debug ipv6 pim sparse-mode timer 1712
debug ipv6 pim sparse-mode 1709
debug ipv6 rip 877
debug isakmp 2700
debug l2tp 2788
debug lacp 554
debug mail 2476
debug mld 1601
debug mstp (RSTP and STP) 479
debug nsm mcast 1632
debug nsm mcast6 1633
debug ospf events 920
debug ospf ifsm 921
debug ospf lsa 922
debug ospf nfsm 923
debug ospf nsm 924
debug ospf packet 925
debug ospf route 926
debug pim sparse-mode timer 1662
debug pim sparse-mode 1661
debug ping-poll 2573
debug platform packet 421
debug policy-based-routing 1422
debug ppp 577

debug pppoe-ac....621
debug radius....1937
debug rip....822
debug snmp....2437
debug ssh client....2495
debug ssh server....2496
debug traffic-control....1774
debug trigger....2538
debug vrrp events....2050
debug vrrp packet....2051
debug vrrp....2049
default log buffered....279
default log console....280
default log email....281
default log external....282
default log host....283
default log monitor....284
default log permanent....285
default-information originate (IPv6 RIPng)....878
default-information originate (RIP)....823
default-information originate....1035
default-information originate....927
default-metric (IPv6 OSPF)....1036
default-metric (IPv6 RIPng)....879
default-metric (OSPF)....928
default-metric (RIP)....1454
default-metric (RIP)....824
default-router....2302
delete debug....125
delete mail....2477
delete....124
description (amf container)....2191
description (Authentication Profile)....1874
description (Domain List)....709
description (interface)....369

description (ping-polling) 2574
description (trigger) 2539
description (VRF) 1455
destination l2tp 622
destination 2789
dir 126
disable (Privileged Exec mode) 98
disable (VRRP) 2052
discovery 2189
distance (BGP and BGP4+) 1172
distance (IPv6 OSPF) 1037
distance (OSPF) 929
distance (RIP) 1456
distance (RIP) 825
distribute-list (IPv6 RIPng) 880
distribute-list (RIP) 1457
distribute-list (RIP) 826
dns-server (DHCPv6) 2374
dns-server 2303
do 99
domain (Domain List) 710
domain-name (DHCPv6) 2376
domain-name 2304
domain-style 1978
dpd-interval 2702
dpd-timeout 2703
dport 2620
dscp 2622
duplex 423
echo 366
edit (filename) 129
edit 128
egress-vlan-id 1979
egress-vlan-name 1980
enable (NAT) 2654

enable (Privileged Exec mode) 100
enable (VRRP) 2053
enable db-summary-opt 931
enable password 165
enable secret 168
encapsulation dot1q 573
encapsulation ppp 2790
encapsulation ppp 393
encapsulation ppp 580
end 102
enrollment (trustpoint configuration mode) 2013
erase factory-default 130
erase factory-default 2192
erase proxy-autoconfig-file 1875
erase startup-config 131
erase web-auth-https-file 1876
exec-timeout 171
exit 103
exit-address-family 1174
export map 1458
fail-count 2575
fingerprint (trustpoint configuration mode) 2014
firewall 2599
flowcontrol (switch port) 425
flowcontrol hardware (asyn/console) 173
fullupdate (RIP) 1459
fullupdate (RIP) 827
group 1981
ha associate 2040
help 104
host (DHCP) 2305
host (Entity) 2624
host area 932
host-name (DDNS) 711
hostname 225

http secure-port 203
http-enable 2193
icmp-code 2626
icmp-type 2628
import map 1460
instance priority (MSTP) 483
instance vlan (MSTP) 485
interface (PPP) 582
interface (to configure) 370
interface (traffic-control) 1775
interface tunnel 2704
interface tunnel 2744
ip (ping-polling) 2576
ip address (Entity) 2630
ip address (GRE) 2745
ip address (IP Addressing and Protocol) 661
ip address dhcp 2306
ip address negotiated 583
ip community-list expanded 1177
ip community-list standard 1179
ip community-list 1175
ip ddns-update-method 712
ip dhcp bootp ignore 2308
ip dhcp leasequery enable 2309
ip dhcp option 2310
ip dhcp pool 2312
ip dhcp-client default-route distance 2313
ip dhcp-relay agent-option checking 2317
ip dhcp-relay agent-option remote-id 2319
ip dhcp-relay agent-option 2315
ip dhcp-relay information policy 2321
ip dhcp-relay maxhops 2323
ip dhcp-relay max-message-length 2324
ip dhcp-relay server-address 2326
ip directed-broadcast 663

ip dns forwarding cache 714
ip dns forwarding dead-time 715
ip dns forwarding domain-list 716
ip dns forwarding retry 717
ip dns forwarding source-interface 718
ip dns forwarding timeout 719
ip dns forwarding 713
ip domain-list 720
ip domain-lookup 721
ip domain-name 722
ip extcommunity-list expanded 1181
ip extcommunity-list standard 1183
ip forward-protocol udp 665
ip gratuitous-arp-link 667
ip helper-address 669
ip igmp flood specific-query 1553
ip igmp last-member-query-count 1554
ip igmp last-member-query-interval 1555
ip igmp maximum-groups 1556
ip igmp mroute-proxy 1558
ip igmp proxy-service 1559
ip igmp querier-timeout 1560
ip igmp query-holdtime 1561
ip igmp query-interval 1563
ip igmp query-max-response-time 1565
ip igmp ra-option 1567
ip igmp robustness-variable 1568
ip igmp snooping fast-leave 1570
ip igmp snooping mrouter 1571
ip igmp snooping querier 1572
ip igmp snooping report-suppression 1573
ip igmp snooping routermode 1574
ip igmp snooping source-timeout 1576
ip igmp snooping tcn query solicit 1577
ip igmp snooping 1569

ip igmp source-address-check 1579
ip igmp startup-query-count 1580
ip igmp startup-query-interval 1581
ip igmp trusted 1582
ip igmp version 1583
ip igmp 1552
ip limited-local-proxy-arp 2655
ip limited-local-proxy-arp 671
ip local-proxy-arp 673
ip mroute 1634
ip multicast route 1636
ip multicast route-limit 1638
ip multicast wrong-vif-suppression 1639
ip multicast-routing 1640
ip name-server 723
ip ospf authentication 933
ip ospf authentication-key 934
ip ospf cost 936
ip ospf database-filter 937
ip ospf dead-interval 938
ip ospf disable all 939
ip ospf hello-interval 940
ip ospf message-digest-key 941
ip ospf mtu 943
ip ospf mtu-ignore 944
ip ospf network 945
ip ospf priority 946
ip ospf resync-timeout 947
ip ospf retransmit-interval 948
ip ospf transmit-delay 949
ip pim anycast-rp 1664
ip pim bsr-border 1665
ip pim bsr-candidate 1666
ip pim cisco-register-checksum 1667
ip pim crp-cisco-prefix 1668

ip pim dr-priority 1669
ip pim exclude-genid 1670
ip pim ext-srcs-directly-connected 1671
ip pim hello-holdtime (PIM-SM) 1672
ip pim hello-interval (PIM-SM) 1673
ip pim ignore-rp-set-priority 1674
ip pim jp-timer 1675
ip pim register-rate-limit 1676
ip pim register-rp-reachability 1677
ip pim register-source 1678
ip pim register-suppression 1679
ip pim rp-address 1680
ip pim rp-candidate 1681
ip pim rp-register-kat 1682
ip pim sparse-mode passive 1684
ip pim sparse-mode 1683
ip pim spt-threshold 1685
ip pim ssm 1686
ip policy-route 1423
ip prefix-list (IPv4 Prefix List) 1185
ip proxy-arp 674
ip radius source-interface 1938
ip redirects 675
ip rip authentication key-chain 828
ip rip authentication mode 830
ip rip authentication string 833
ip rip receive version 836
ip rip receive-packet 835
ip rip send version 1-compatible 841
ip rip send version 838
ip rip send-packet 837
ip rip split-horizon 843
ip route static inter-vrf 1461
ip route 1462
ip route 793

ip subnet 2632
ip tacacs source-interface 2031
ip tcp adjust-mss 2747
ip tcp adjust-mss 2768
ip tcp adjust-mss 372
ip tcp adjust-mss 585
ip tcp synack-retries 676
ip tcp timeout established 2601
ip tcp timeout established 677
ip tftp source-interface 132
ip unnumbered 587
ip unreachables 678
ip vrf forwarding 1466
ip vrf 1465
ips 2672
ipv6 address (DHCPv6 PD) 2377
ipv6 address (Entity) 2634
ipv6 address (GRE) 2749
ipv6 address autoconfig 757
ipv6 address dhcp 2380
ipv6 address 755
ipv6 ddns-update-method 725
ipv6 dhcp client pd 2382
ipv6 dhcp option 2384
ipv6 dhcp pool 2386
ipv6 dhcp server 2388
ipv6 enable 759
ipv6 eui64-linklocal 761
ipv6 forwarding 762
ipv6 local pool 2389
ipv6 mld last-member-query-count 1603
ipv6 mld last-member-query-interval 1604
ipv6 mld querier-timeout 1605
ipv6 mld query-interval 1606
ipv6 mld query-max-response-time 1607

ipv6 mld robustness-variable 1608
ipv6 mld snooping fast-leave 1611
ipv6 mld snooping mrouter 1612
ipv6 mld snooping querier 1614
ipv6 mld snooping report-suppression 1615
ipv6 mld snooping 1609
ipv6 mld ssm-map enable 1617
ipv6 mld static-group 1618
ipv6 mld version 1620
ipv6 mld 1602
ipv6 mroute 1641
ipv6 multicast forward-slow-path-packet 763
ipv6 multicast route 1643
ipv6 multicast route-limit 1645
ipv6 multicast-routing 1646
ipv6 nd accept-ra-pinfo 764
ipv6 nd current-hoplimit 765
ipv6 nd managed-config-flag 767
ipv6 nd minimum-ra-interval 768
ipv6 nd other-config-flag 770
ipv6 nd prefix (DHCPv6) 2391
ipv6 nd prefix 771
ipv6 nd ra-interval 773
ipv6 nd ra-lifetime 774
ipv6 nd reachable-time 775
ipv6 nd retransmission-time 777
ipv6 nd suppress-ra 779
ipv6 neighbor 780
ipv6 opportunistic-nd 781
ipv6 ospf authentication spi 1039
ipv6 ospf cost 1041
ipv6 ospf dead-interval 1043
ipv6 ospf display route single-line 1044
ipv6 ospf encryption spi esp 1045
ipv6 ospf hello-interval 1048

ipv6 ospf neighbor 1049
ipv6 ospf network 1051
ipv6 ospf priority 1052
ipv6 ospf retransmit-interval 1053
ipv6 ospf transmit-delay 1054
ipv6 pim anycast-rp 1714
ipv6 pim bsr-border 1716
ipv6 pim bsr-candidate 1718
ipv6 pim cisco-register-checksum 1720
ipv6 pim crp-cisco-prefix 1721
ipv6 pim dr-priority 1722
ipv6 pim exclude-genid 1724
ipv6 pim ext-srcs-directly-connected 1725
ipv6 pim hello-holdtime 1726
ipv6 pim hello-interval 1727
ipv6 pim ignore-rp-set-priority 1728
ipv6 pim jp-timer 1729
ipv6 pim neighbor-filter 1730
ipv6 pim register-rate-limit 1731
ipv6 pim register-rp-reachability 1732
ipv6 pim register-source 1733
ipv6 pim register-suppression 1734
ipv6 pim rp embedded 1738
ipv6 pim rp-address 1735
ipv6 pim rp-candidate 1737
ipv6 pim rp-register-kat 1739
ipv6 pim sparse-mode passive 1741
ipv6 pim sparse-mode 1740
ipv6 pim spt-threshold 1742
ipv6 pim ssm 1743
ipv6 pim unicast-bsm 1744
ipv6 policy-route 1425
ipv6 prefix-list (IPv6 Prefix List) 1187
ipv6 rip metric-offset 881
ipv6 rip split-horizon 883

ipv6 route 782
ipv6 route 796
ipv6 router ospf area 1055
ipv6 router rip 885
ipv6 subnet 2636
ipv6 tcp adjust-mss 2751
ipv6 tcp adjust-mss 2770
ipv6 tcp adjust-mss 374
ipv6 tcp adjust-mss 589
ipv6 tftp source-interface 133
ipv6 unreachables 783
ip-version 2792
keepalive (PPP) 591
key chain 845
key 844
key-string 846
l2tp peer-address dns-lookup 623
l2tp peer-address radius-lookup group 625
l2tp peer-address static 626
l2tp profile 628
l2tp tunnel 2793
l2tp unmanaged port 2795
l2tp-profile 2796
l3-filtering enable 1776
l3-filtering enable 454
lacp global-passive-mode enable 555
lacp port-priority 556
lacp system-priority 557
lacp timeout 558
lease 2328
length (asyn) 175
length (ping-poll data) 2577
lifetime (IPsec Profile) 2705
lifetime (ISAKMP Profile) 2706
line 176

link-address 2393
linkflap action 427
local-proxy-arp 2657
local-proxy-arp 680
local-subaddress 2797
log buffered (filter) 287
log buffered exclude 290
log buffered size 293
log buffered 286
log console (filter) 295
log console exclude 298
log console 294
log date-format 301
log email (filter) 303
log email exclude 306
log email time 309
log email 302
log event-host 204
log event-host 2195
log external (filter) 313
log external exclude 316
log external rotate 319
log external size 321
log external 311
log facility 322
log host (filter) 326
log host exclude 329
log host source 332
log host time 333
log host 324
log monitor (filter) 335
log monitor exclude 338
log permanent (filter) 342
log permanent exclude 345
log permanent size 348

log permanent 341
log trustpoint....351
log url-requests....2681
log url-requests....352
login authentication 1920
logout....105
log-rate-limit nsm 349
mac address-table acquire 428
mac address-table ageing-time 429
mac address-table static 430
mac-filter....455
mac-filter-group....456
mac-learning 457
mail 2478
match as-path 1189
match as-path 1383
match community 1190
match community 1384
match interface....1386
match ip address 1387
match ip next-hop....1389
match ipv6 address....1390
match ipv6 next-hop 1391
match metric 1392
match origin....1393
match route-type....1395
match tag 1396
max-concurrent-dd (IPv6 OSPF) 1057
max-concurrent-dd....950
max-fib-routes (VRF) 1467
max-fib-routes....227
max-fib-routes....797
maximum-area 951
maximum-paths....800
maximum-prefix....847

max-paths....1192
max-static-routes (VRF)....1469
max-static-routes....229
max-static-routes....799
mirror interface....403
mkdir....134
modeltype....2196
move debug....136
move rule (Firewall)....2602
move rule (NAT)....2658
move rule (traffic-control)....1777
move....135
mru jumbo....376
mtu (PPP)....593
mtu....377
multicast....1647
nas....1982
nat....2659
neighbor (IPv6 RIPng)....886
neighbor (OSPF)....952
neighbor (RIP)....848
neighbor activate....1193
neighbor advertisement-interval....1196
neighbor allowas-in....1199
neighbor as-origination-interval....1202
neighbor attribute-unchanged....1204
neighbor capability graceful-restart....1207
neighbor capability orf prefix-list....1210
neighbor capability route-refresh....1213
neighbor collide-established....1216
neighbor default-originate....1218
neighbor description....1221
neighbor disallow-infinite-holdtime....1224
neighbor dont-capability-negotiate....1226
neighbor ebgp-multihop....1229

neighbor enforce-multihop 1232
neighbor filter-list 1235
neighbor interface 1238
neighbor local-as 1239
neighbor maximum-prefix 1241
neighbor next-hop-self 1244
neighbor next-hop-self 1470
neighbor override-capability 1247
neighbor passive 1249
neighbor password 1251
neighbor password 1476
neighbor peer-group (add a neighbor) 1255
neighbor peer-group (create a peer-group) 1257
neighbor port 1258
neighbor prefix-list 1260
neighbor remote-as 1263
neighbor remote-as 1473
neighbor remove-private-AS (BGP only) 1266
neighbor restart-time 1268
neighbor route-map 1270
neighbor route-reflector-client (BGP only) 1274
neighbor route-server-client (BGP only) 1276
neighbor send-community 1277
neighbor shutdown 1280
neighbor soft-reconfiguration inbound 1282
neighbor timers 1285
neighbor transparent-as 1288
neighbor transparent-nexthop 1290
neighbor unsuppress-map 1292
neighbor update-source 1295
neighbor version (BGP only) 1298
neighbor weight 1300
network (BGP and BGP4+) 1303
network (DHCP) 2330
network (Entity) 2638

network (RIP) 1480
network (RIP) 849
network area 953
network synchronization 1306
next-server 2331
no crypto pki certificate 2016
no debug all 230
no debug isakmp 2707
normal-interval 2578
ntp authenticate 2413
ntp authentication-key 2414
ntp broadcastdelay 2415
ntp discard 2416
ntp master 2417
ntp peer 2418
ntp restrict 2420
ntp server 2422
ntp source 2424
ntp trusted-key (deprecated) 2426
optimistic-nd 681
option (DHCPv6) 2395
option 2332
ospf abr-type 955
ospf restart grace-period 956
ospf restart helper 957
ospf router-id 959
overflow database external 961
overflow database 960
passive-interface (IPv6 OSPF) 1058
passive-interface (IPv6 RIPng) 887
passive-interface (OSPF) 962
passive-interface (RIP) 1482
passive-interface (RIP) 851
password (DDNS) 726
peer default ip address 594

peer neighbor-route 596
pfs 2708
ping ipv6 784
ping 1483
ping 682
ping-poll 2579
polarity 431
policy (traffic-control) 1778
policy-based-routing enable 1428
policy-based-routing 1427
ppp authentication refuse 600
ppp authentication 598
ppp hostname 602
ppp ipcp dns suffix-list 606
ppp ipcp dns suffix-list 729
ppp ipcp dns 604
ppp ipcp dns 727
ppp ipcp ip-override 608
ppp password 609
ppp service-name (PPPoE) 610
ppp timeout idle 611
ppp username 612
ppp-auth-protocol 630
pppoe-ac 631
pppoe-ac-service 632
preempt-mode 2054
prefix-delegation pool 2397
priority 2056
privilege level 178
probe enable 2334
probe packets 2335
probe timeout 2336
probe type 2337
protect (Firewall) 2603
protect (IPS) 2673

protect (URL filtering) 2682
protection ipsec 2798
protection local-name 2799
protection profile 2801
protection remote-name 2802
protocol 2640
proxy-auth 633
proxy-port 1921
pwd 137
radius-secure-proxy aaa 1922
radius-secure-proxy local-server 1983
radius-server deadtime 1939
radius-server host 1940
radius-server key 1943
radius-server local 1984
radius-server retransmit 1944
radius-server timeout 1946
range 2338
rd (route distinguisher) 1485
reboot 232
recv-buffer-size (IPv6 RIPng) 888
recv-buffer-size (RIP) 852
red-curve 1780
redistribute (into BGP or BGP4+) 1307
redistribute (into BGP or BGP4+) 1486
redistribute (IPv6 OSPF) 1059
redistribute (IPv6 RIPng) 889
redistribute (OSPF) 1488
redistribute (OSPF) 963
redistribute (RIP) 1490
redistribute (RIP) 853
region (MSTP) 487
reload 233
remote-subaddress 2804
repeat 2540

restart bgp graceful (BGP only) 1309
restart ipv6 ospf graceful 1061
restart ospf graceful 965
restart rip graceful 855
retry-interval (DDNS) 731
revision (MSTP) 488
rip restart grace-period 856
rmdir 138
route (IPv6 RIPng) 890
route (RIP) 1492
route (RIP) 857
route 2339
route-map 1311
route-map 1397
router bgp 1310
router ipv6 ospf 1062
router ipv6 rip 891
router ipv6 vrrp (interface) 2058
router ospf 1495
router ospf 966
router rip 858
router vrrp (interface) 2060
router-id (IPv6 OSPF) 1063
router-id (VRF) 1497
router-id 968
route-target 1493
rsakeypair (trustpoint configuration mode) 2017
rule (Firewall) 2604
rule (MAC Filter) 458
rule (NAT) 2660
rule (traffic-control) 1782
sample-size 2580
script 2541
security-password forced-change 180
security-password history 179

security-password lifetime 181
security-password minimum-categories 183
security-password minimum-length 184
security-password min-lifetime-enforce 182
security-password reject-expired-pwd 185
security-password warning 186
send-lifetime 859
server (radsecproxy-aaa) 1923
server (Server Group) 1948
server auth-port 1985
server enable 1986
server mutual-authentication 1925
server name-check 1926
server trustpoint 1927
service advanced-vty 187
service dhcp-relay 2340
service dhcp-server 2341
service http 205
service password-encryption 188
service ssh 2497
service telnet 189
service test 409
service-name 634
set aggregator 1400
set as-path 1314
set as-path 1401
set atomic-aggregate 1402
set comm-list delete 1403
set community 1315
set community 1404
set dampening 1406
set extcommunity 1408
set ip next-hop (route map) 1410
set ipv6 next-hop 1411
set local-preference 1412

set metric 1413
set metric-type 1415
set origin 1416
set originator-id 1417
set tag 1418
set weight 1419
shared-secret 2805
show aaa local user locked 1929
show aaa server group 1930
show application detail 2643
show application 2642
show arp 1498
show arp 684
show atmf area guests 2204
show atmf area guests-detail 2206
show atmf area nodes 2208
show atmf area nodes-detail 2210
show atmf area summary 2212
show atmf area 2201
show atmf authorization 2213
show atmf backup area 2220
show atmf backup guest 2222
show atmf backup 2216
show atmf container 2224
show atmf detail 2227
show atmf group members 2231
show atmf group 2229
show atmf guests detail 2235
show atmf guests 2233
show atmf links detail 2240
show atmf links guest detail 2251
show atmf links guest 2249
show atmf links statistics 2255
show atmf links 2238
show atmf nodes 2258

show atmf provision nodes 2260
show atmf secure-mode audit link 2264
show atmf secure-mode audit 2263
show atmf secure-mode certificates 2265
show atmf secure-mode sa 2268
show atmf secure-mode statistics 2271
show atmf secure-mode 2261
show atmf tech 2273
show atmf virtual-links 2276
show atmf working-set 2278
show atmf 2197
show auth diagnostics 1878
show auth interface 1879
show auth sessionstatistics 1882
show auth statistics interface 1883
show auth supplicant interface 1887
show auth supplicant 1884
show auth 1877
show auth-web-server page 1889
show auth-web-server 1888
show autoboot 139
show banner login 2499
show bgp ipv6 (BGP4+ only) 1317
show bgp ipv6 community (BGP4+ only) 1318
show bgp ipv6 community-list (BGP4+ only) 1320
show bgp ipv6 dampening (BGP4+ only) 1321
show bgp ipv6 filter-list (BGP4+ only) 1322
show bgp ipv6 inconsistent-as (BGP4+ only) 1323
show bgp ipv6 longer-prefixes (BGP4+ only) 1324
show bgp ipv6 neighbors (BGP4+ only) 1325
show bgp ipv6 paths (BGP4+ only) 1328
show bgp ipv6 prefix-list (BGP4+ only) 1329
show bgp ipv6 quote-regexp (BGP4+ only) 1330
show bgp ipv6 regexp (BGP4+ only) 1331
show bgp ipv6 route-map (BGP4+ only) 1332

show bgp ipv6 summary (BGP4+ only) 1333
show bgp memory maxallocation (BGP only) 1334
show bgp nexthop-tracking (BGP only) 1335
show bgp nexthop-tree-details (BGP only) 1336
show boot 140
show bridge macaddr 462
show bridge 460
show cellular 395
show clock 234
show connection-log events 2606
show connection-log events 353
show counter dhcp-client 2342
show counter dhcp-relay 2343
show counter dhcp-server 2347
show counter ipv6 dhcp-client 2399
show counter ipv6 dhcp-server 2401
show counter log 354
show counter mail 2479
show counter ntp (deprecated) 2427
show counter ping-poll 2582
show counter snmp-server 2438
show cpu history 239
show cpu 236
show crypto key hostkey 2500
show crypto key mypubkey rsa 2018
show crypto key pubkey-chain knownhosts 1501
show crypto key pubkey-chain knownhosts 2502
show crypto key pubkey-chain userkey 2504
show crypto key userkey 2505
show crypto pki certificates (deleted) 1987
show crypto pki certificates local-radius-all-users (deleted) 1988
show crypto pki certificates user (deleted) 1989
show crypto pki certificates 2019
show crypto pki enrollment user 2021
show crypto pki trustpoint 2022

show crypto pki trustpoints (deleted) 1990
show ddns-update-method status 732
show debugging aaa 1931
show debugging atmf packet 2280
show debugging atmf 2279
show debugging bgp (BGP only) 1337
show debugging firewall 2614
show debugging igmp 1584
show debugging ip dns forwarding 733
show debugging ip packet 687
show debugging ipv6 ospf 1064
show debugging ipv6 pim sparse-mode 1745
show debugging ipv6 rip 892
show debugging isakmp 2710
show debugging l2tp 2806
show debugging lacp 560
show debugging mld 1621
show debugging mstp 489
show debugging ospf 969
show debugging pim sparse-mode 1687
show debugging platform packet 432
show debugging ppp 613
show debugging pppoe ac 636
show debugging radius 1950
show debugging rip 861
show debugging snmp 2442
show debugging traffic-control 1784
show debugging trigger 2543
show debugging vrrp 2062
show debugging 241
show dhcp lease 2349
show diagnostic channel-group 561
show entity 2646
show etherchannel detail 563
show etherchannel summary 564

show etherchannel 562
show exception log 355
show file systems 143
show file 142
show firewall connections limits config-check 2610
show firewall connections limits 2609
show firewall connections 2608
show firewall rule config-check 2613
show firewall rule 2611
show firewall 2607
show flowcontrol interface 433
show history 106
show hosts 734
show http 206
show interface (PPP) 614
show interface brief 383
show interface err-disabled 434
show interface memory 242
show interface memory 384
show interface status 386
show interface switchport 435
show interface tunnel (GRE) 2753
show interface tunnel (IPsec) 2711
show interface tunnel (L2TPv3) 2807
show interface tunnel (OpenVPN) 2772
show interface 379
show ip bgp (BGP only) 1338
show ip bgp attribute-info (BGP only) 1339
show ip bgp cidr-only (BGP only) 1340
show ip bgp cidr-only (BGP only) 1503
show ip bgp community (BGP only) 1341
show ip bgp community (BGP only) 1504
show ip bgp community-info (BGP only) 1343
show ip bgp community-list (BGP only) 1344
show ip bgp community-list (BGP only) 1506

show ip bgp dampening (BGP only) 1345
show ip bgp dampening (BGP only) 1507
show ip bgp filter-list (BGP only) 1347
show ip bgp filter-list (BGP only) 1509
show ip bgp inconsistent-as (BGP only) 1348
show ip bgp inconsistent-as (BGP only) 1510
show ip bgp longer-prefixes (BGP only) 1349
show ip bgp longer-prefixes (BGP only) 1511
show ip bgp neighbors (BGP only) 1350
show ip bgp neighbors connection-retrytime (BGP only) 1353
show ip bgp neighbors hold-time (BGP only) 1354
show ip bgp neighbors keepalive (BGP only) 1355
show ip bgp neighbors keepalive-interval (BGP only) 1356
show ip bgp neighbors notification (BGP only) 1357
show ip bgp neighbors open (BGP only) 1358
show ip bgp neighbors rcvd-msgs (BGP only) 1359
show ip bgp neighbors sent-msgs (BGP only) 1360
show ip bgp neighbors update (BGP only) 1361
show ip bgp paths (BGP only) 1362
show ip bgp prefix-list (BGP only) 1363
show ip bgp prefix-list (BGP only) 1512
show ip bgp quote-regexp (BGP only) 1364
show ip bgp quote-regexp (BGP only) 1513
show ip bgp regexp (BGP only) 1366
show ip bgp regexp (BGP only) 1515
show ip bgp route-map (BGP only) 1368
show ip bgp route-map (BGP only) 1517
show ip bgp scan (BGP only) 1369
show ip bgp summary (BGP only) 1370
show ip bgp summary (BGP only) 1518
show ip community-list 1372
show ip dhcp binding 2351
show ip dhcp pool 2353
show ip dhcp server statistics 2359
show ip dhcp server summary 2361

show ip dhcp-relay 2357
show ip dns forwarding cache 736
show ip dns forwarding server 738
show ip dns forwarding 735
show ip domain-list 740
show ip domain-name 741
show ip extcommunity-list 1373
show ip forwarding 689
show ip igmp groups 1585
show ip igmp interface 1587
show ip igmp proxy 1589
show ip igmp snooping mrouter 1590
show ip igmp snooping routermode 1591
show ip igmp snooping source-timeout 1592
show ip igmp snooping statistics 1593
show ip interface vrf 1520
show ip interface vrf 691
show ip interface 690
show ip mroute 1648
show ip mvif 1650
show ip name-server 742
show ip ospf border-routers 973
show ip ospf database asbr-summary 976
show ip ospf database external 977
show ip ospf database network 979
show ip ospf database nssa-external 980
show ip ospf database opaque-area 982
show ip ospf database opaque-as 983
show ip ospf database opaque-link 984
show ip ospf database router 985
show ip ospf database summary 987
show ip ospf database 974
show ip ospf interface 990
show ip ospf neighbor 991
show ip ospf route 993

show ip ospf virtual-links....994
show ip ospf....970
show ip pbr route....1429
show ip pim sparse-mode bsr-router....1688
show ip pim sparse-mode interface detail....1691
show ip pim sparse-mode interface....1689
show ip pim sparse-mode local-members....1692
show ip pim sparse-mode mroute detail....1695
show ip pim sparse-mode mroute....1693
show ip pim sparse-mode neighbor....1697
show ip pim sparse-mode nexthop....1698
show ip pim sparse-mode packet statistics....1699
show ip pim sparse-mode rp mapping....1701
show ip pim sparse-mode rp-hash....1700
show ip prefix-list (IPv4 Prefix List)....1374
show ip protocols bgp (BGP only)....1375
show ip protocols ospf....995
show ip protocols rip....862
show ip rip database....864
show ip rip interface....865
show ip rip vrf database....1522
show ip rip vrf database....866
show ip rip vrf interface....1523
show ip rip vrf interface....867
show ip rip....863
show ip route database....1527
show ip route database....804
show ip route summary....1530
show ip route summary....807
show ip route....1524
show ip route....801
show ip rpf....1651
show ip sockets....693
show ip traffic....696
show ip vrf detail....1533

show ip vrf interface 1534
show ip vrf 1532
show ips categories....2675
show ips....2674
show ipsec counters 2712
show ipsec peer 2713
show ipsec policy....2714
show ipsec profile 2715
show ipsec sa....2717
show ipv6 dhcp binding 2404
show ipv6 dhcp interface 2407
show ipv6 dhcp pool 2409
show ipv6 dhcp 2403
show ipv6 forwarding....785
show ipv6 interface brief....786
show ipv6 mif 1655
show ipv6 mld groups 1622
show ipv6 mld interface 1623
show ipv6 mld snooping mrouter 1624
show ipv6 mld snooping statistics....1625
show ipv6 mroute 1652
show ipv6 multicast forwarding....1654
show ipv6 neighbors 787
show ipv6 ospf database external 1069
show ipv6 ospf database grace....1070
show ipv6 ospf database inter-prefix 1071
show ipv6 ospf database inter-router....1072
show ipv6 ospf database intra-prefix 1073
show ipv6 ospf database link....1074
show ipv6 ospf database network....1075
show ipv6 ospf database router 1077
show ipv6 ospf database....1067
show ipv6 ospf interface 1082
show ipv6 ospf neighbor....1084
show ipv6 ospf route 1086

show ipv6 ospf virtual-links 1088
show ipv6 ospf 1065
show ipv6 pbr route 1431
show ipv6 pim sparse-mode bsr-router 1746
show ipv6 pim sparse-mode interface detail 1749
show ipv6 pim sparse-mode interface 1747
show ipv6 pim sparse-mode local-members 1750
show ipv6 pim sparse-mode mroute detail 1754
show ipv6 pim sparse-mode mroute 1752
show ipv6 pim sparse-mode neighbor 1756
show ipv6 pim sparse-mode nexthop 1757
show ipv6 pim sparse-mode rp mapping 1759
show ipv6 pim sparse-mode rp nexthop 1760
show ipv6 pim sparse-mode rp-hash 1758
show ipv6 prefix-list (IPv6 Prefix List) 1376
show ipv6 protocols rip 893
show ipv6 rip database 895
show ipv6 rip interface 896
show ipv6 rip 894
show ipv6 route summary 790
show ipv6 route summary 811
show ipv6 route 788
show ipv6 route 809
show isakmp counters 2718
show isakmp key (GRE) 2754
show isakmp key (IPsec) 2719
show isakmp key (L2TPv3) 2808
show isakmp peer 2720
show isakmp profile 2721
show isakmp sa 2723
show l2tp session 2809
show l2tp tunnel config-check 2815
show l2tp tunnel 2811
show lacp sys-id 565
show lacp-counter 566

show log config 358
show log external 360
show log permanent 361
show log 356
show mac address-table 436
show mac-filter 463
show mail 2480
show memory allocations 246
show memory history 248
show memory pools 249
show memory shared 250
show memory 244
show mirror interface 406
show mirror 405
show nat rule config-check 2667
show nat rule 2665
show nat 2664
show ntp associations 2428
show ntp counters associations 2432
show ntp counters 2430
show ntp status 2434
show openvpn connections detail 2774
show openvpn connections 2773
show pbr rules 1433
show ping-poll 2584
show platform port 439
show platform 438
show port etherchannel 567
show pppoe-ac config-check 637
show pppoe-ac connections 639
show pppoe-ac statistics 641
show privilege 190
show process 251
show proxy-autoconfig-file 1890
show radius local-server group 1991

show radius local-server nas 1992
show radius local-server statistics 1993
show radius local-server user....1994
show radius server group 1932
show radius 1951
show reboot history 253
show resource....209
show route-map....1377
show route-map....1420
show router-id....254
show running-config atmf 2281
show running-config firewall....2615
show running-config interface 149
show running-config ips 2677
show running-config l2tp-profile....2817
show running-config l2tp-tunnel....2818
show running-config log....362
show running-config nat....2668
show running-config pppoe-ac 644
show running-config router ipv6 vrrp 2063
show running-config router vrrp 2064
show running-config snmp 2443
show running-config ssh....2506
show running-config traffic-control 1785
show running-config trigger 2544
show running-config url-filter....2683
show running-config vrf 1535
show running-config 145
show security-password configuration 191
show security-password user....192
show snmp-server community 2445
show snmp-server group 2446
show snmp-server user 2447
show snmp-server view....2448
show snmp-server 2444

show spanning-tree brief 493
show spanning-tree mst config 495
show spanning-tree mst detail interface 498
show spanning-tree mst detail interface 503
show spanning-tree mst detail 496
show spanning-tree mst instance interface 501
show spanning-tree mst instance 500
show spanning-tree mst interface 502
show spanning-tree mst 494
show spanning-tree statistics instance interface 508
show spanning-tree statistics instance 507
show spanning-tree statistics interface 510
show spanning-tree statistics 505
show spanning-tree vlan range-index 512
show spanning-tree 490
show ssh client 2510
show ssh server allow-users 2513
show ssh server deny-users 2514
show ssh server 2511
show ssh 2508
show startup-config 151
show static-channel-group 568
show storm-control 444
show system environment 256
show system interrupts 257
show system mac 258
show system pci device 259
show system pci tree 260
show system serialnumber 261
show system usb 398
show system 255
show tacacs+ 2032
show tech-support 262
show telnet 193
show traffic-control counters 1787

show traffic-control interface 1789
show traffic-control policy 1791
show traffic-control red-curve....1793
show traffic-control rule config-check 1795
show traffic-control rule 1796
show traffic-control....1797
show trigger....2545
show url-filter 2684
show users 194
show version 152
show vlan 465
show vrrp (session) 2071
show vrrp counters 2067
show vrrp ipv6....2070
show vrrp 2065
shutdown 388
snmp trap link-status suppress 2451
snmp trap link-status 2449
snmp-server community....2455
snmp-server contact....2456
snmp-server enable trap 2457
snmp-server engineID local reset....2461
snmp-server engineID local 2459
snmp-server group 2462
snmp-server host....2464
snmp-server legacy-ifadminstatus....2466
snmp-server location 2467
snmp-server source-interface 2468
snmp-server startup-trap-delay 2469
snmp-server user 2470
snmp-server view....2473
snmp-server....2453
sntp-address 2411
source....2819
source-ip....2588

spanning-tree autoedge (RSTP and MSTP) 513
spanning-tree cisco-interoperability (MSTP) 514
spanning-tree edgeport (RSTP and MSTP) 515
spanning-tree enable 516
spanning-tree errdisable-timeout enable 518
spanning-tree errdisable-timeout interval 519
spanning-tree force-version 520
spanning-tree forward-time 521
spanning-tree guard root 522
spanning-tree hello-time 523
spanning-tree link-type 524
spanning-tree max-age 525
spanning-tree max-hops (MSTP) 526
spanning-tree mode 527
spanning-tree mst configuration 528
spanning-tree mst instance path-cost 530
spanning-tree mst instance priority 532
spanning-tree mst instance restricted-role 533
spanning-tree mst instance restricted-tcn 535
spanning-tree mst instance 529
spanning-tree path-cost 536
spanning-tree portfast (STP) 537
spanning-tree portfast bpdu-filter 539
spanning-tree portfast bpdu-guard 541
spanning-tree priority (bridge priority) 543
spanning-tree priority (port priority) 544
spanning-tree restricted-role 545
spanning-tree restricted-tcn 546
spanning-tree transmit-holdcount 547
speed (asyn) 264
speed 445
sport 2648
ssh client 2517
ssh server allow-users 2521
ssh server authentication 2523

ssh server deny-users 2525
ssh server max-auth-tries 2527
ssh server resolve-host....2528
ssh server scp....2529
ssh server sftp 2530
ssh server 2519
ssh 1536
ssh 2515
state 2282
static-channel-group 569
storm-control level 447
sub-class (htb)....1798
sub-class (priority) 1800
sub-class (wrr) 1802
subject-name (trustpoint configuration)....2023
subnet-mask 2362
sub-sub-class (htb)....1804
sub-sub-class (priority)....1806
sub-sub-class (wrr)....1808
summary-address (IPv6 OSPF)....1089
summary-address 996
suppress-ipv4-updates (DDNS)....744
switchport access vlan 466
switchport atmf-agentlink 2284
switchport atmf-arealink remote-area 2285
switchport atmf-crosslink 2287
switchport atmf-guestlink....2289
switchport atmf-link 2291
switchport mode access 467
switchport mode trunk 468
switchport trunk allowed vlan....469
switchport trunk native vlan 472
synchronization 1378
tacacs-server host 2034
tacacs-server key 2036

tacacs-server timeout 2037
tcpdump 1538
tcpdump 698
telnet server 196
telnet 1539
telnet 195
terminal length 197
terminal monitor 266
terminal resize 198
test interface 410
test 2550
time (trigger) 2551
timeout (ping polling) 2590
timers (BGP) 1379
timers (IPv6 RIPng) 897
timers (RIP) 1540
timers (RIP) 868
timers spf (IPv6 OSPF) (deprecated) 1091
timers spf exp (IPv6 OSPF) 1092
timers spf exp 997
traceroute ipv6 791
traceroute 1542
traceroute 699
traffic-control enable 1810
traffic-control 1811
transform (IPsec Profile) 2724
transform (ISAKMP Profile) 2725
transition-mode 2073
trap 2553
trigger activate 2555
trigger 2554
tunnel checksum 2755
tunnel destination (GRE) 2757
tunnel destination (IPsec) 2727
tunnel dscp 2756

tunnel local id 2820
tunnel local name (GRE)....2759
tunnel local name (IPsec) 2729
tunnel local selector 2730
tunnel mode (GRE) 2760
tunnel mode (IPsec) 2732
tunnel mode (L2TPv3) 2821
tunnel mode openvpn tap 2778
tunnel mode openvpn tun 2779
tunnel openvpn authentication 2775
tunnel openvpn cipher 2776
tunnel openvpn expiry-bytes 2780
tunnel openvpn expiry-seconds....2781
tunnel openvpn port 2782
tunnel openvpn tagging....2783
tunnel protection ipsec (GRE) 2761
tunnel protection ipsec (IPsec) 2733
tunnel protection ipsec 2822
tunnel remote id....2823
tunnel remote name (GRE)....2762
tunnel remote name (IPsec)....2734
tunnel remote selector....2735
tunnel source (GRE)....2763
tunnel source (IPsec)....2737
tunnel ttl 2765
type atmf node 2292
type atmf node 2556
type cpu 2559
type interface 2560
type memory....2561
type periodic 2562
type ping-poll 2563
type reboot 2564
type time....2565
type usb....2566

undebug (DDNS) 745
undebug aaa 1934
undebug all ipv6 pim sparse-mode 1762
undebug all pim sparse-mode 1702
undebug all 267
undebug atmf 2295
undebug bgp (BGP only) 1380
undebug igmp 1595
undebug ip packet interface 700
undebug ipv6 ospf events 1093
undebug ipv6 ospf ifsm 1094
undebug ipv6 ospf lsa 1095
undebug ipv6 ospf nfsm 1096
undebug ipv6 ospf packet 1097
undebug ipv6 ospf route 1098
undebug ipv6 pim sparse-mode 1763
undebug ipv6 rip 898
undebug isakmp 2739
undebug lacp 571
undebug mail 2481
undebug mstp 548
undebug ospf events 998
undebug ospf ifsm 999
undebug ospf lsa 1000
undebug ospf nfsm 1001
undebug ospf nsm 1002
undebug ospf packet 1003
undebug ospf route 1004
undebug ping-poll 2592
undebug platform packet 448
undebug ppp 618
undebug radius 1954
undebug rip 870
undebug snmp 2474
undebug ssh client 2531

undebug ssh server....2532
undebug trigger....2567
undebug vrrp events....2076
undebug vrrp packet....2077
undebug vrrp....2075
unmount....157
unmount....363
up-count....2591
update webgui now....207
update webgui now....210
update-interval (DDNS)....746
update-url (DDNS)....747
url-filter reload custom-lists....2685
url-filter....2686
usb mode-switch....400
use-ipv4-for-ipv6-updates (DDNS)....750
user (RADIUS server)....1996
username (DDNS)....751
username....199
username....2296
version (ISAKMP)....2740
version (RIP)....1543
version (RIP)....871
version....2824
virtual-ip....2078
virtual-ipv6....2080
vlan (RADIUS server)....1998
vlan database....474
vlan....473
vrrp vmac....2082
wait....367
whitelist....2687
write file....158
write memory....159
write terminal....160

zone 2650

Part 1: Setup and Troubleshooting

1 CLI Navigation Commands

Introduction

Overview This chapter provides an alphabetical reference for the commands used to navigate between different modes. This chapter also provides a reference for the help and show commands used to help navigate within the CLI.

Command List

- "configure terminal" on page 97
- "disable (Privileged Exec mode)" on page 98
- "do" on page 99
- "enable (Privileged Exec mode)" on page 100
- "end" on page 102
- "exit" on page 103
- "help" on page 104
- "logout" on page 105
- "show history" on page 106

configure terminal

Overview This command enters the Global Configuration command mode.

Syntax

```
configure terminal
```

Mode Privileged Exec

Example To enter the Global Configuration command mode (note the change in the command prompt), enter the command:

```
awplus# configure terminal
awplus(config)#
```

disable (Privileged Exec mode)

Overview This command exits the Privileged Exec mode, returning the prompt to the User Exec mode. To end a session, use the exit command.

Syntax

```
disable
```

Mode Privileged Exec

Example To exit the Privileged Exec mode, enter the command:

```
awplus# disable
awplus>
```

Related Commands

enable (Privileged Exec mode)

end

exit

do

Overview This command lets you to run User Exec and Privileged Exec mode commands when you are in any configuration mode.

Syntax

```
do <command>
```

Parameter	Description
<command>	Specify the command and its parameters.

Mode Any configuration mode

Example

```
awplus# configure terminal
awplus(config)# do ping 192.0.2.23
```

enable (Privileged Exec mode)

Overview This command enters the Privileged Exec mode and optionally changes the privilege level for a session. If a privilege level is not specified then the maximum privilege level (15) is applied to the session. If the optional privilege level is omitted then only users with the maximum privilege level can access Privileged Exec mode without providing the password as specified by the enable password or enable secret commands. If no password is specified then only users with the maximum privilege level set with the username command can assess Privileged Exec mode.

Syntax

```
enable [<privilege-level>]
```

Parameter	Description
<privilege-level>	Specify the privilege level for a CLI session in the range <1-15>, where 15 is the maximum privilege level, 7 is the intermediate privilege level and 1 is the minimum privilege level. The privilege level for a user must match or exceed the privilege level set for the CLI session for the user to access Privileged Exec mode. Privilege level for a user is configured by username.

Mode User Exec

Usage Many commands are available from the Privileged Exec mode that configure operating parameters for the device, so you should apply password protection to the Privileged Exec mode to prevent unauthorized use. Passwords can be encrypted but then cannot be recovered. Note that non-encrypted passwords are shown in plain text in configurations.

The username command sets the privilege level for the user. After login, users are given access to privilege level 1. Users access higher privilege levels with the enable (Privileged Exec mode) command. If the privilege level specified is higher than the users configured privilege level specified by the username command, then the user is prompted for the password for that level.

Note that a separate password can be configured for each privilege level using the enable password and the enable secret commands from the Global Configuration mode. The service password-encryption command encrypts passwords configured by the enable password and the enable secret commands, so passwords are not shown in plain text in configurations.

Example The following example shows the use of the **enable** command to enter the Privileged Exec mode (note the change in the command prompt).

```
awplus> enable
awplus#
```

The following example shows the **enable** command enabling access the Privileged Exec mode for users with a privilege level of 7 or greater. Users with a privilege level of 7 or greater do not need to enter a password to access Privileged Exec mode. Users with a privilege level 6 or less need to enter a password to access

Privilege Exec mode. Use the enable password command or the enable secret commands to set the password to enable access to Privileged Exec mode.

```
awplus> enable 7
awplus#
```

Related Commands

disable (Privileged Exec mode)

enable password

enable secret

exit

service password-encryption

username

end

Overview This command returns the prompt to the Privileged Exec command mode from any other advanced command mode.

Syntax

```
end
```

Mode All advanced command modes, including Global Configuration and Interface Configuration modes.

Example The following example shows the use of the **end** command to return to the Privileged Exec mode directly from Interface mode.

```
awplus# configure terminal
awplus(config)# interface eth1
awplus(config-if)# end
awplus#
```

Related Commands

disable (Privileged Exec mode)

enable (Privileged Exec mode)

exit

exit

Overview This command exits the current mode, and returns the prompt to the mode at the previous level. When used in User Exec mode, the **exit** command terminates the session.

Syntax

```
exit
```

Mode All command modes, including Global Configuration and Interface Configuration modes.

Example The following example shows the use of the **exit** command to exit Interface mode, and return to Configure mode.

```
awplus# configure terminal
awplus(config)# interface eth1
awplus(config-if)# exit
awplus(config)#
```

Related Commands

disable (Privileged Exec mode)

enable (Privileged Exec mode)

end

help

Overview This command displays a description of the AlliedWare Plus™ OS help system.

Syntax

```
help
```

Mode All command modes

Example To display a description on how to use the system help, use the command:

```
awplus# help
```

Output Figure 1-1: Example output from the **help** command

```
When you need help at the command line, press '?'.

If nothing matches, the help list will be empty. Delete
characters until entering a '?' shows the available options.

Enter '?' after a complete parameter to show remaining valid
command parameters (e.g. 'show ?').

Enter '?' after part of a parameter to show parameters that
complete the typed letters (e.g. 'show ip?').
```

logout

Overview This command exits the User Exec or Privileged Exec modes and ends the session.

Syntax

```
logout
```

Mode User Exec and Privileged Exec

Example To exit the User Exec mode, use the command:

```
awplus# logout
```

show history

Overview This command lists the commands entered in the current session. The history buffer is cleared automatically upon reboot.

The output lists all command line entries, including commands that returned an error.

For information on filtering and saving command output, see the "Getting Started with AlliedWare Plus" Feature Overview and Configuration Guide.

Syntax

```
show history
```

Mode User Exec and Privileged Exec

Example To display the commands entered during the current session, use the command:

```
awplus# show history
```

Output Figure 1-2: Example output from the **show history** command

```
1 en
2 show ru
3 conf t
4 route-map er deny 3
5 exit
6 ex
7 di
```

2 File and Configuration Management Commands

Introduction

Overview This chapter provides an alphabetical reference of AlliedWare Plus™ OS file and configuration management commands.

Filename Syntax and Keyword Usage Many of the commands in this chapter use the placeholder "filename" to represent the name and location of the file that you want to act on. The following table explains the syntax of the filename for each different type of file location.

When you copy a file...	Use this syntax:	Example:
Copying in local Flash memory	`flash:[/][<directory>/]<filename>`	To specify a file in the configs directory in Flash: flash:configs/example.cfg
Copying to or from a USB storage device	`usb:[/][<directory>/]<filename>`	To specify a file in the top-level directory of the USB stick: usb:example.cfg
Copying with HTTP	`http://[[<username>:<password>]@]{<hostname>|<host-ip>}[/<filepath>]/<filename>`	To specify a file in the configs directory on the server: http://www.company.com/configs/example.cfg
Copying with TFTP	`tftp://[[<location>]/<directory>]/<filename>`	To specify a file in the top-level directory of the server: tftp://172.1.1.1/example.cfg
Copying with SCP	`scp://<username>@<location>[/<directory>][/<filename>]`	To specify a file in the configs directory on the server, logging on as user "bob": e.g. scp://bob@10.10.0.12/configs/example.cfg
Copying with SFTP	`sftp://[[<location>]/<directory>]/<filename>`	To specify a file in the top-level directory of the server: sftp://10.0.0.5/example.cfg

Valid characters

The filename and path can include characters from up to four categories. The categories are:

1) uppercase letters: A to Z

2) lowercase letters: a to z

3) digits: 0 to 9

4) special symbols: most printable ASCII characters not included in the previous three categories, including the following characters:

- -
- /
- .
- _
- @
- "
- '
- *
- :
- ~
- ?

Do not use spaces, parentheses or the + symbol within filenames. Use hyphens or underscores instead.

Syntax for directory listings

A leading slash (/) indicates the root of the current filesystem location.

In commands where you need to specify the local filesystem's Flash base directory, you may use **flash** or **flash:** or **flash:/**. For example, these commands are all the same:

- `dir flash`
- `dir flash:`
- `dir flash:/`

Similarly, you can specify the USB storage device base directory with **usb** or **usb:** or **usb:/**

You cannot name a directory or subdirectory **flash**, **nvs**, **usb**, **card**, **tftp**, **scp**, **sftp** or **http.** These keywords are reserved for tab completion when using various file commands.

Command List

- "autoboot enable" on page 110
- "boot config-file" on page 111
- "boot config-file backup" on page 112
- "boot system" on page 113

- "boot system backup" on page 114
- "cd" on page 115
- "copy (filename)" on page 116
- "copy current-software" on page 118
- "copy debug" on page 119
- "copy running-config" on page 120
- "copy startup-config" on page 121
- "copy zmodem" on page 122
- "create autoboot" on page 123
- "delete" on page 124
- "delete debug" on page 125
- "dir" on page 126
- "edit" on page 128
- "edit (filename)" on page 129
- "erase factory-default" on page 130
- "erase startup-config" on page 131
- "ip tftp source-interface" on page 132
- "ipv6 tftp source-interface" on page 133
- "mkdir" on page 134
- "move" on page 135
- "move debug" on page 136
- "pwd" on page 137
- "rmdir" on page 138
- "show autoboot" on page 139
- "show boot" on page 140
- "show file" on page 142
- "show file systems" on page 143
- "show running-config" on page 145
- "show running-config interface" on page 149
- "show startup-config" on page 151
- "show version" on page 152
- "unmount" on page 157
- "write file" on page 158
- "write memory" on page 159
- "write terminal" on page 160

autoboot enable

Overview This command enables the device to restore a release file and/or a configuration file from external media, such as a USB storage device.

When the Autoboot feature is enabled, the device looks for a special file called `autoboot.txt` on the external media. If this file exists, the device will check the key and values in the file and recover the device with a new release file and/or configuration file from the external media. An example of a valid `autoboot.txt` file is shown in the following figure.

Figure 2-1: Example autoboot.txt file

```
[AlliedWare Plus]
Copy_from_external_media_enabled=yes
Boot_Release=AR2050V-5.4.7-1.1.rel
Boot_Config=network1.cfg
```

Use the **no** variant of this command to disable the Autoboot feature.

Syntax

```
autoboot enable
no autoboot enable
```

Default The Autoboot feature operates the first time the device is powered up in the field, after which the feature is disabled by default.

Mode Global Configuration

Example To enable the Autoboot feature, use the command:

```
awplus# configure terminal
awplus# configure terminal
awplus(config)# no autoboot enable
```

Related Commands

create autoboot

show autoboot

show boot

boot config-file

Overview Use this command to set the configuration file to use during the next boot cycle.

Use the **no** variant of this command to remove the configuration file.

Syntax

```
boot config-file <filepath-filename>
no boot config-file
```

Parameter	Description
<filepath-filename>	Filepath and name of a configuration file. The specified configuration file must exist in the specified filesystem. Valid configuration files must have a **.cfg** extension.

Mode Global Configuration

Usage You can only specify that the configuration file is on a USB storage device if there is a backup configuration file already specified in Flash. If you attempt to set the configuration file on a USB storage device and a backup configuration file is not specified in Flash, the following error message is displayed:

```
% Backup configuration files must be stored in the flash
filesystem
```

For an explanation of the configuration fallback order, see the File Management Feature Overview and Configuration Guide.

Examples To run the configuration file “branch.cfg” stored on the device’s Flash filesystem the next time the device boots up, use the commands:

```
awplus# configure terminal
awplus(config)# boot config-file flash:/branch.cfg
```

To stop running the configuration file “branch.cfg” stored on the device’s Flash filesystem when the device boots up, use the commands:

```
awplus# configure terminal
awplus(config)# no boot config-file flash:/branch.cfg
```

Related Commands

boot config-file backup

boot system

boot system backup

show boot

boot config-file backup

Overview Use this command to set a backup configuration file to use if the main configuration file cannot be accessed.

Use the **no** variant of this command to remove the backup configuration file.

Syntax

```
boot config-file backup <filepath-filename>
no boot config-file backup
```

Parameter	Description
<filepath-filename>	Filepath and name of a backup configuration file. Backup configuration files must be in the Flash filesystem. Valid backup configuration files must have a **.cfg** extension.
`backup`	The specified file is a backup configuration file.

Mode Global Configuration

Usage For an explanation of the configuration fallback order, see the File Management Feature Overview and Configuration Guide.

Examples To set the configuration file `backup.cfg` as the backup to the main configuration file, use the commands:

```
awplus# configure terminal
awplus(config)# boot config-file backup flash:/backup.cfg
```

To remove the configuration file `backup.cfg` as the backup to the main configuration file, use the commands:

```
awplus# configure terminal
awplus(config)# no boot config-file backup flash:/backup.cfg
```

Related Commands

boot config-file

boot system

boot system backup

show boot

boot system

Overview Use this command to set the release file to load during the next boot cycle.

Use the **no** variant of this command to stop specifying a primary release file to boot from. If the device boots up with no release file set, it will use autoboot or the backup release file if either of those are configured, or you can use the boot menu to select a release file source. To access the boot menu, type Ctrl-B at bootup.

Syntax

```
boot system <filepath-filename>
no boot system
```

Parameter	Description
<filepath-filename>	Filepath and name of a release file. The specified release file must exist and must be stored in the root directory of the specified filesystem. Valid release files must have a **.rel** extension.

Mode Global Configuration

Usage You can only specify that the release file is on a USB storage device if there is a backup release file already specified in Flash. If you attempt to set the release file on a USB storage device and a backup release file is not specified in Flash, the following error message is displayed:

```
% A backup boot image must be set before setting a current boot
image on USB storage device
```

Examples To boot up with the release AR2050V-5.4.7-1.1.rel file, which is stored on the device's Flash filesystem, the next time the device boots up, use the commands:

```
awplus# configure terminal
awplus(config)# boot system flash:/AR2050V-5.4.7-1.1.rel
```

Related Commands

boot config-file

boot config-file backup

boot system backup

show boot

boot system backup

Overview Use this command to set a backup release file to load if the main release file cannot be loaded.

Use the **no** variant of this command to stop specifying a backup release file.

Syntax

```
boot system backup <filepath-filename>
no boot system backup
```

Parameter	Description
<filepath-filename>	Filepath and name of a backup release file. Backup release files must be in the Flash filesystem. Valid release files must have a **.rel** extension.
`backup`	The specified file is a backup release file.

Mode Global Configuration

Examples To specify the file AR2050V-5.4.7-0.1.rel as the backup to the main release file, use the commands:

```
awplus# configure terminal
awplus(config)# boot system backup flash:/AR2050V-5.4.7-0.1.rel
```

To stop specifying a backup to the main release file, use the commands:

```
awplus# configure terminal
awplus(config)# no boot system backup
```

Related Commands

boot config-file

boot config-file backup

boot system

show boot

cd

Overview This command changes the current working directory.

Syntax

```
cd <directory-name>
```

Parameter	Description
<directory-name>	Name and path of the directory.

Mode Privileged Exec

Example To change to the directory called `images`, use the command:

```
awplus# cd images
```

Related Commands

dir

pwd

show file systems

copy (filename)

Overview This command copies a file. This allows you to:

- copy files from your device to a remote device
- copy files from a remote device to your device
- copy files stored on Flash memory to or from a different memory type, such as a USB storage device
- create two copies of the same file on your device

Syntax

```
copy [force] <source-name> <destination-name>
```

Parameter	Description
`force`	This parameter forces the copy command to overwrite the destination file, if it already exists, without prompting the user for confirmation. If you specify **force**, you can copy files to multiple AMF nodes through a working-set.
<source-name>	The filename and path of the source file. See Introduction on page 107 for valid syntax.
<destination-name>	The filename and path for the destination file. See Introduction on page 107 for valid syntax.

Mode Privileged Exec

Examples To use TFTP to copy the file “bob.key” into the current directory from the remote server at 10.0.0.1, use the command:

```
awplus# copy tftp://10.0.0.1/bob.key bob.key
```

To use SFTP to copy the file “new.cfg” into the current directory from a remote server at 10.0.1.2, use the command:

```
awplus# copy sftp://10.0.1.2/new.cfg bob.key
```

To use SCP with the username “beth” to copy the file old.cfg into the directory config_files on a remote server that is listening on TCP port 2000, use the command:

```
awplus# copy scp://beth@serv:2000/config_files/old.cfg old.cfg
```

To copy the file “newconfig.cfg” onto your device’s Flash from a USB storage device, use the command:

```
awplus# copy usb:/newconfig.cfg flash:/newconfig.cfg
```

To copy the file “newconfig.cfg” to a USB storage device from your device’s Flash, use the command:

```
awplus# copy flash:/newconfig.cfg usb:/newconfig.cfg
```

To copy the file “config.cfg” into the current directory from a USB storage device, and rename it to “configtest.cfg”, use the command:

```
awplus# copy usb:/config.cfg configtest.cfg
```

To copy the file “config.cfg” into the current directory from a remote file server, and rename it to “configtest.cfg”, use the command:

```
awplus# copy fserver:/config.cfg configtest.cfg
```

On an AMF managed network to distribute the file “file.txt” to the top level of Flash memory on all nodes from the top level of Flash memory on the node named “master”, use the commands:

```
awplus# atmf working-set group all
network-name[80]# copy force master.atmf/flash:/file.txt flash:
```

Related Commands

copy zmodem

copy buffered-log

copy permanent-log

edit (filename)

show file systems

copy current-software

Overview This command copies the AlliedWare Plus™ OS software that the device has booted from, to a destination file.

Syntax

```
copy current-software <destination-name>
```

Parameter	Description
<destination-name>	The filename and path where you would like the current running-release saved. This command creates a file if no file exists with the specified filename. If a file already exists, then the CLI prompts you before overwriting the file. See Introduction on page 107 for valid syntax.

Mode Privileged Exec

Example To copy the current software as installed in the working directory with the file name `my-release.rel`, use the command:

```
awplus# copy current-software my-release.rel
```

Related Commands

boot system backup

show boot

copy debug

Overview This command copies a specified debug file to a destination file.

Syntax

```
copy debug {<destination-name>|debug|flash|nvs|scp|tftp|usb}
{<source-name>|debug|flash|nvs|scp|tftp|usb}
```

Parameter	Description
<destination-name>	The filename and path where you would like the debug output saved. See Introduction on page 107 for valid syntax.
<source-name>	The filename and path where the debug output originates. See Introduction on page 107 for valid syntax.

Mode Privileged Exec

Example To copy debug output to a USB storage device with a filename “my-debug”, use the following command:

```
awplus# copy debug usb:my-debug
```

Output Figure 2-2: CLI prompt after entering the **copy debug** command

```
Enter source file name []:
```

Related Commands

delete debug

move debug

copy running-config

Overview This command copies the running-config to a destination file, or copies a source file into the running-config. Commands entered in the running-config do not survive a device reboot unless they are saved in a configuration file.

Syntax

```
copy <source-name> running-config
copy running-config [<destination-name>]
copy running-config startup-config
```

Parameter	Description
<source-name>	The filename and path of a configuration file. This must be a valid configuration file with a **.cfg** filename extension. Specify this when you want the script in the file to become the new running-config. See Introduction on page 107 for valid syntax.
<destination-name>	The filename and path where you would like the current running-config saved. This command creates a file if no file exists with the specified filename. If a file already exists, then the CLI prompts you before overwriting the file. See Introduction on page 107 for valid syntax. If you do not specify a file name, the device saves the running-config to a file called default.cfg.
`startup-config`	Copies the running-config into the file set as the current startup-config file.

Mode Privileged Exec

Examples To copy the `running-config` into the startup-config, use the command:

```
awplus# copy running-config startup-config
```

To copy the file `layer3.cfg` into the `running-config`, use the command:

```
awplus# copy layer3.cfg running-config
```

To use SCP to copy the running-config as `current.cfg` to the remote server listening on TCP port 2000, use the command:

```
awplus# copy running-config
scp://user@server:2000/config_files/current.cfg
```

Related Commands

copy startup-config

write file

write memory

copy startup-config

Overview This command copies the startup-config script into a destination file, or alternatively copies a configuration script from a source file into the startup-config file.

Syntax

```
copy <source-name> startup-config
copy startup-config <destination-name>
```

Parameter	Description
<source-name>	The filename and path of a configuration file. This must be a valid configuration file with a **.cfg** filename extension. Specify this to copy the script in the file into the startup-config file. Note that this does not make the copied file the new startup file, so any further changes made in the configuration file are not added to the startup-config file unless you reuse this command. See Introduction on page 107 for valid syntax.
<destination-name>	The destination and filename that you are saving the startup- config as. This command creates a file if no file exists with the specified filename. If a file already exists, then the CLI prompts you before overwriting the file. See Introduction on page 107 for valid syntax.

Mode Privileged Exec

Examples To copy the file `Layer3.cfg` to the `startup-config`, use the command:

```
awplus# copy Layer3.cfg startup-config
```

To copy the `startup-config` as the file `oldconfig.cfg` in the current directory, use the command:

```
awplus# copy startup-config oldconfig.cfg
```

Related Commands copy running-config

copy zmodem

Overview This command allows you to copy files using ZMODEM using Minicom. ZMODEM works over a serial connection and does not need any interfaces configured to do a file transfer.

Syntax

```
copy <source-name> zmodem
copy zmodem
```

Parameter	Description
<source-name>	The filename and path of the source file. See Introduction on page 107 for valid syntax.

Mode Privileged Exec

Example To copy the local file `asuka.key` using ZMODEM, use the command:

```
awplus# copy asuka.key zmodem
```

Related Commands copy (filename)

show file systems

create autoboot

Overview Use this command to create an `autoboot.txt` file on external media. This command will automatically ensure that the keys and values that are expected in this file are correct. After the file is created the **create autoboot** command will copy the current release and configuration files across to the external media. The external media is then available to restore a release file and/or a configuration file to the device.

Syntax

```
create autoboot usb
```

Mode Privileged Exec

Example To create an autoboot.txt file on a USB storage device, use the command:

```
awplus# create autoboot usb
```

Related Commands

autoboot enable

show autoboot

show boot

delete

Overview This command deletes files or directories.

Syntax `delete [force] [recursive] <filename>`

Parameter	Description
`force`	Ignore nonexistent filenames and never prompt before deletion.
`recursive`	Remove the contents of directories recursively.
`<filename>`	The filename and path of the file to delete. See Introduction on page 107 for valid syntax.

Mode Privileged Exec

Examples To delete the file `temp.cfg` from the current directory, use the command:

```
awplus# delete temp.cfg
```

To delete the read-only file `one.cfg` from the current directory, use the command:

```
awplus# delete force one.cfg
```

To delete the directory `old_configs`, which is not empty, use the command:

```
awplus# delete recursive old_configs
```

To delete the directory `new_configs`, which is not empty, without prompting if any read-only files are being deleted, use the command:

```
awplus# delete force recursive new_configs
```

Related Commands erase startup-config

rmdir

delete debug

Overview Use this command to delete a specified debug output file.

Syntax

```
delete debug <source-name>
```

Parameter	Description
<source-name>	The filename and path where the debug output originates. See Introduction on page 107 for valid URL syntax.

Mode Privileged Exec

Example To delete debug output, use the following command:

```
awplus# delete debug
```

Output Figure 2-3: CLI prompt after entering the **delete debug** command

```
Enter source file name []:
```

Related Commands

copy debug

move debug

dir

Overview This command lists the files on a filesystem. If no directory or file is specified then this command lists the files in the current working directory.

Syntax
```
dir [all] [recursive] [sort [reverse] [name|size|time]
[<filename>|debug|flash|nvs|usb]
```

Parameter	Description
`all`	List all files.
`recursive`	List the contents of directories recursively.
`sort`	Sort directory listing.
`reverse`	Sort using reverse order.
`name`	Sort by name.
`size`	Sort by size.
`time`	Sort by modification time (default).
<filename>	The name of the directory or file. If no directory or file is specified, then this command lists the files in the current working directory.
`debug`	Debug root directory
`flash`	Flash memory root directory
`nvs`	NVS memory root directory
`usb`	USB storage device root directory

Mode Privileged Exec

Examples To list the files in the current working directory, use the command:

```
awplus# dir
```

To list the non-hidden files in the root of the Flash filesystem, use the command:

```
awplus# dir flash
```

To list all the files in the root of the Flash filesystem, use the command:

```
awplus# dir all flash:
```

To list recursively the files in the Flash filesystem, use the command:

```
awplus# dir recursive flash:
```

To list the files in alphabetical order, use the command:

```
awplus# dir sort name
```

To list the files by size, smallest to largest, use the command:

```
awplus# dir sort reverse size
```

To sort the files by modification time, oldest to newest, use the command:

```
awplus# dir sort reverse time
```

Output Figure 2-4: Example output from the **dir** command

```
awplus#dir
       630 -rw- May 19 2016 23:36:31  example.cfg
  23652123 -rw- May 17 2016 03:41:18
       149 -rw- Feb  9 2016 00:40:35  exception.log
```

Related Commands

cd

pwd

edit

Overview This command opens a text file in the AlliedWare Plus™ text editor. Once opened you can use the editor to alter to the file.

If a filename is specified and it already exists, then the editor opens it in the text editor.

If no filename is specified, the editor prompts you for one when you exit it.

Before starting the editor make sure your terminal, terminal emulation program, or Telnet client is 100% compatible with a VT100 terminal. The editor uses VT100 control sequences to display text on the terminal.

For more information about using the editor, including control sequences, see the File Management Feature Overview and Configuration Guide.

Syntax

```
edit [<filename>]
```

Parameter	Description
<filename>	Name of a file in the local Flash filesystem.

Mode Privileged Exec

Examples To create and edit a new text file, use the command:

```
awplus# edit
```

To edit the existing configuration file `myconfig.cfg` stored on your device's Flash memory, use the command:

```
awplus# edit myconfig.cfg
```

Related Commands edit (filename)

show file

edit (filename)

Overview This command opens a remote text file as read-only in the AlliedWare Plus™ text editor.

Before starting the editor make sure your terminal, terminal emulation program, or Telnet client is 100% compatible with a VT100 terminal. The editor uses VT100 control sequences to display text on the terminal.

Syntax

```
edit <filename>
```

Parameter	Description
<filename>	The filename and path of the remote file. See Introduction on page 107 for valid syntax.

Mode Privileged Exec

Example To view the file `bob.key` stored in the security directory of a TFTP server, use the command:

```
awplus# edit tftp://security/bob.key
```

Related Commands

copy (filename)

edit

show file

erase factory-default

Overview This command erases all data from NVS and all data from Flash **excluding** the following:

- the current release file
- the backup release file
- license files

The device is then rebooted and returned to its factory default condition. The device can then be used for AMF automatic node recovery.

Syntax

```
erase factory-default
```

Mode Privileged Exec.

Usage This command is an alias to the atmf cleanup command.

Example To erase data, use the command:

```
Node_1# erase factory-default
```

```
This command will erase all NVS, all flash contents except for
the boot release, and any license files, and then reboot the
switch. Continue? (y/n):y
```

Related Commands atmf cleanup

erase startup-config

Overview This command deletes the file that is set as the startup-config file, which is the configuration file that the system runs when it boots up.

At the next restart, the device loads the default configuration file, default.cfg. If default.cfg no longer exists, then the device loads with the factory default configuration. This provides a mechanism for you to return the device to the factory default settings.

Syntax

```
erase startup-config
```

Mode Privileged Exec

Example To delete the file currently set as the startup-config, use the command:

```
awplus# erase startup-config
```

Related Commands

boot config-file backup

copy running-config

copy startup-config

show boot

ip tftp source-interface

Overview Use this command to manually specify the IP address that all TFTP requests originate from. This is useful in network configurations where TFTP servers only accept requests from certain devices, or where the server cannot dynamically determine the source of the request.

Use the **no** variant of this command to stop specifying a source.

Syntax

```
ip tftp source-interface [<interface>|<ip-add>]
no ip tftp source-interface
```

Parameter	Description
<interface>	The interface that TFTP requests originate from. The device will use the IP address of this interface as its source IP address. You can specify any interface that can have an IP address attached to it (e.g. a VLAN, PPP or Eth interface).
<ip-add>	The IP address that TFTP requests originate from, in dotted decimal format

Default There is no default source specified.

Mode Global Configuration

Usage This command is helpful in network configurations where TFTP traffic needs to traverse point-to-point links or subnets within your network, and you do not want to propagate those point-to-point links through your routing tables.

In those circumstances, the TFTP server cannot dynamically determine the source of the TFTP request, and therefore cannot send the requested data to the correct device. Specifying a source interface or address enables the TFTP server to send the data correctly.

Example To specify that TFTP requests originate from the IP address 192.0.2.1, use the following commands:

```
awplus# configure terminal
awplus(config)# ip tftp source-interface 192.0.2.1
```

Related Commands copy (filename)

ipv6 tftp source-interface

Overview Use this command to manually specify the IPv6 address that all TFTP requests originate from. This is useful in network configurations where TFTP servers only accept requests from certain devices, or where the server cannot dynamically determine the source of the request.

Use the **no** variant of this command to stop specifying a source.

Syntax

```
ipv6 tftp source-interface [<interface>|<ipv6-add>]
no ipv6 tftp source-interface
```

Parameter	Description
<interface>	The interface that TFTP requests originate from. The device will use the IPv6 address of this interface as its source IPv6 address. You can specify any interface that can have an IPv6 address attached to it (e.g. a VLAN, PPP or Eth interface). s
<ipv6-add>	The IPv6 address that TFTP requests originate from, in the format x:x::x:x, for example, 2001:db8::8a2e:7334.

Default There is no default source specified.

Mode Global Configuration

Usage This command is helpful in network configurations where TFTP traffic needs to traverse point-to-point links or subnets within your network, and you do not want to propagate those point-to-point links through your routing tables.

In those circumstances, the TFTP server cannot dynamically determine the source of the TFTP request, and therefore cannot send the requested data to the correct device. Specifying a source interface or address enables the TFTP server to send the data correctly.

Example To specify that TFTP requests originate from the IPv6 address 2001:db8::8a2e:7334, use the following commands:

```
awplus# configure terminal
awplus(config)# ipv6 tftp source-interface 2001:db8::8a2e:7334
```

Related Commands copy (filename)

mkdir

Overview This command makes a new directory.

Syntax

```
mkdir <name>
```

Parameter	Description
<name>	The name and path of the directory that you are creating.

Mode Privileged Exec

Usage You cannot name a directory or subdirectory **flash**, **nvs**, **usb**, **card**, **tftp**, **scp**, **sftp** or **http.** These keywords are reserved for tab completion when using various file commands.

Example To make a new directory called `images` in the current directory, use the command:

```
awplus# mkdir images
```

Related Commands

cd

dir

pwd

move

Overview This command renames or moves a file.

Syntax

```
move <source-name> <destination-name>
```

Parameter	Description
<source-name>	The filename and path of the source file. See Introduction on page 107 for valid syntax.
<destination-name>	The filename and path of the destination file. See Introduction on page 107 for valid syntax.

Mode Privileged Exec

Examples To rename the file `temp.cfg` to `startup.cfg`, use the command:

```
awplus# move temp.cfg startup.cfg
```

To move the file `temp.cfg` from the root of the Flash filesystem to the directory `myconfigs`, use the command:

```
awplus# move temp.cfg myconfigs/temp.cfg
```

Related Commands

delete

edit

show file

show file systems

move debug

Overview This command moves a specified debug file to a destination debug file.

Syntax

```
move debug {<destination-name>|debug|nvs|flash|usb}
```

Parameter	Description
<destination-name>	The filename and path where you would like the debug output moved to. See Introduction on page 107 for valid syntax.

Mode Privileged Exec

Example To move debug output onto a USB storage device with a filename “my-debug”, use the following command:

```
awplus# move debug usb:my-debug
```

Output Figure 2-5: CLI prompt after entering the **move debug** command

```
Enter source file name []:
```

Related Commands

copy debug

delete debug

pwd

Overview This command prints the current working directory.

Syntax

```
pwd
```

Mode Privileged Exec

Example To print the current working directory, use the command:

```
awplus# pwd
```

Related Commands cd

rmdir

Overview This command removes a directory. This command only works on empty directories, unless you specify the optional **force** keyword.

Syntax

```
rmdir [force] <name>
```

Parameter	Description
`force`	Optional keyword that allows you to delete directories that are not empty and contain files or subdirectories.
<name>	The name and path of the directory.

Mode Privileged Exec

Usage You can use the CLI to access filesystems on a specific external memory device. See the Introduction on page 107 for syntax details.

Examples To remove the directory “images” from the top level of the Flash filesystem, use the command:

```
awplus# rmdir flash:/images
```

To create a directory called “level1” containing a subdirectory called “level2”, and then force the removal of both directories, use the commands:

```
awplus# mkdir level1
awplus# mkdir level1/level2
awplus# rmdir force level1
```

Related Commands

cd

dir

mkdir

pwd

show autoboot

Overview This command displays the Autoboot configuration and status.

Syntax

```
show autoboot
```

Mode Privileged Exec

Example To show the Autoboot configuration and status, use the command:

```
awplus# show autoboot
```

Output Figure 2-6: Example output from the **show autoboot** command

```
awplus#show autoboot
Autoboot configuration
------------------------------------------------------------------------------
Autoboot status                  : enabled
USB file autoboot.txt exists     : yes

Restore information on USB
Autoboot enable in autoboot.txt  : yes
Restore release file             : AR2050V-5.4.7-1.1.rel (file exists)
Restore configuration file       : network_1.cfg (file exists)
```

Figure 2-7: Example output from the **show autoboot** command when an external media source is not present

```
awplus#show autoboot
Autoboot configuration
------------------------------------------------------------------------------
Autoboot status                        : disabled
External media source                  : media not found.
```

Related Commands

autoboot enable

create autoboot

show boot

show boot

Overview This command displays the current boot configuration. We recommend that the currently running release is set as the current boot image.

Syntax

```
show boot
```

Mode Privileged Exec

Example To show the current boot configuration, use the command:

```
awplus# show boot
```

Output Figure 2-8: Example output from **show boot** when the current boot config is on a USB storage device

```
awplus#show boot
Boot configuration
-----------------------------------------------------------------
Current software   : AR2050V-5.4.7-1.1.rel
Current boot image : usb:/AR2050V-5.4.7-1.1.rel
Backup  boot image : flash:/AR2050V-5.4.7-0.1.rel
Default boot config: flash:/default.cfg
Current boot config: usb:/my.cfg (file exists)
Backup  boot config: flash:/backup.cfg (file not found)
Autoboot status    : enabled
```

Table 2-1: Parameters in the output from **show boot**

Parameter	Description
`Current software`	The current software release that the device is using.
`Current boot image`	The boot image currently configured for use during the next boot cycle.
`Backup boot image`	The boot image to use during the next boot cycle if the device cannot load the main image.
`Default boot config`	The default startup configuration file. The device loads this configuration script if no file is set as the startup-config file.
`Current boot config`	The configuration file currently configured as the startup-config file. The device loads this configuration file during the next boot cycle if this file exists.

Table 2-1: Parameters in the output from **show boot** (cont.)

Parameter	Description
`Backup boot config`	The configuration file to use during the next boot cycle if the main configuration file cannot be loaded.
`Autoboot status`	The status of the Autoboot feature; either enabled or disabled.

Related Commands

autoboot enable

boot config-file backup

boot system backup

show autoboot

show file

Overview This command displays the contents of a specified file.

Syntax

```
show file <filename>
```

Parameter	Description
<filename>	Name of a file on the local Flash filesystem, or name and directory path of a file.

Mode Privileged Exec

Example To display the contents of the file `oldconfig.cfg`, which is in the current directory, use the command:

```
awplus# show file oldconfig.cfg
```

Related Commands

edit

edit (filename)

show file systems

show file systems

Overview This command lists the filesystems and their utilization information where appropriate.

Syntax
```
show file systems
```

Mode Privileged Exec

Examples To display the filesystems, use the command:

```
awplus# show file systems
```

Output Figure 2-9: Example output from the **show file systems** command

```
awplus#show file systems
 Size(b)   Free(b)   Type   Flags  Prefixes   S/D/V   Lcl/Ntwk  Avail
-----------------------------------------------------------------------
  63.0M     28.5M   flash     rw  flash:     static  local      Y
      -         -   system    rw  system:    virtual local      -
  10.0M      9.8M   debug     rw  debug:     static  local      Y
 499.0K    431.0K   nvs       rw  nvs:       static  local      Y
      -         -   tftp      rw  tftp:      -       network    -
      -         -   scp       rw  scp:       -       network    -
      -         -   sftp      ro  sftp:      -       network    -
      -         -   http      ro  http:      -       network    -
      -         -   rsync     rw  rsync:     -       network    -
```

Table 3: Parameters in the output of the **show file systems** command

Parameter	Description
`Size (B)` `Available`	The total memory available to this filesystem. The units are given after the value and are M for Megabytes or k for kilobytes.
`Free (B)`	The total memory free within this filesystem. The units are given after the value and are M for Megabytes or k for kilobytes.
`Type`	The memory type used for this filesystem; one of: flash system tftp scp sftp http.
`Flags`	The file setting options: rw (read write), ro (read only).

Table 3: Parameters in the output of the **show file systems** command (cont.)

Parameter	Description
`Prefixes`	The prefixes used when entering commands to access the filesystems; one of: flash system tftp scp sftp http.
`S/V/D`	The memory type: static, virtual, dynamic.
`Lcl / Ntwk`	Whether the memory is located locally or via a network connection.
`Avail`	Whether the memory is accessible: Y (yes), N (no), - (not applicable)

Related Commands

edit

edit (filename)

show file

show running-config

Overview This command displays the current configuration of your device. Its output includes all non-default configuration. The default settings are not displayed.

NOTE: *You can control the output by entering | or > at the end of the command:*

- To display only lines that contain a particular word, enter:

  `| include <word>`

- To start the display at the first line that contains a particular word, enter:

  `| begin <word>`

- To save the output to a file, enter:

  `> <filename>`

Syntax `show running-config [full|<feature>]`

Parameter	Description	
`full`	Display the running-config for all features. This is the default setting, so it is the same as entering **show running-config**.	
`<feature>`	Display only the configuration for a single feature. The features available depend on your device and will be some of the following list:	
	access-list	ACL configuration
	antivirus	Antivirus configuration
	application	Application configuration
	as-path	Autonomous system path filter configuration
	as-path access-list	Configuration of ACLs for AS path filtering
	atmf	Allied Telesis Management Framework configuration
	bgp	Border Gateway Protocol (BGP) configuration
	community-list	Community-list configuration
	crypto	Security-specific configuration
	dhcp	DHCP configuration
	dpi	Deep Packet Inspection configuration
	entity	Entity configuration
	firewall	Firewall configuration
	interface	Interface configuration. See show running-config interface for further options.

Parameter	Description	
	ip	Internet Protocol (IP) configuration
	ip pim dense-mode	PIM-DM configuration
	ip pim sparse-mode	PIM-SM configuration
	ip route	IP static route configuration
	ip-reputation	IP Reputation configuration
	ips	IPS configuration
	ipsec	Internet Protocol Security (IPSec) configuration
	ipv6	Internet Protocol version 6 (IPv6) configuration
	ipv6 access-list	IPv6 ACL configuration
	ipv6 mroute	IPv6 multicast route configuration
	ipv6 prefix-list	IPv6 prefix list configuration
	ipv6 route	IPv6 static route configuration
	isakmp	Internet Security Association Key Management Protocol (ISAKMP) configuration
	key chain	Authentication key management configuration
	l2tp-profile	L2TP tunnel profile configuration
	lldp	LLDP configuration
	log	Logging utility configuration
	malware-protection	Malware protection configuration
	nat	Network Address Translation configuration
	power-inline	Power over Ethernet (PoE) configuration
	policy-based-routing	Policy-based routing (PBR) configuration
	pppoe-ac	PPPoE access concentrator configuration
	prefix-list	Prefix-list configuration
	route-map	Route-map configuration
	router	Router configuration
	router-id	Configuration of the router identifier for this system
	security-password	Strong password security configuration
	snmp	SNMP configuration
	ssh	Secure Shell configuration

Parameter	Description	
	switch	Switch configuration
	web-control	Web Control configuration

Mode Privileged Exec and Global Configuration

Example To display the current configuration of your device, use the command:

```
awplus# show running-config
```

Output Figure 2-10: Example output from **show running-config**

```
awplus#show running-config
!
service password-encryption
!
no banner motd
!
username manager privilege 15 password 8 $1$bJoVec4D$JwOJGPr7YqoExA0GVasdE0
!
log host source eth2
!
no service ssh
!

service telnet
!
no service http
!
no clock timezone
!
snmp-server
!
aaa authentication enable default local
aaa authentication login default local
!
ip domain-lookup
!
service dhcp-server
!
bridge 1
!
lacp global-passive-mode enable
!
l2tp tunnel test1
 version 2
 ip-version 4
!
interface eth1
 encapsulation ppp 0
 encapsulation dot1q 1
 bridge-group 1
 ip address dhcp
 !
```

```
interface eth2
 ip address 192.168.0.20/16
!
interface ppp0
 ipv6 address 2001:db9::a3/64
 ipv6 enable
 snmp trap link-status
!
trigger 1
 type cpu 90
 day monday tuesday wednesday thursday friday
!
line con 0
line vty 0 4
!
end
```

Related Commands

copy running-config

show running-config interface

show running-config interface

Overview This command displays the current configuration of one or more interfaces on the device.

Syntax

```
show running-config interface [<interface-list>] [ip igmp|ip
multicast|ip pim dense-mode|ip pim sparse-mode|ipv6
rip|lacp|mstp|ospf|rip|rstp|stp]
```

Parameter	Description
<interface-list>	The interfaces or ports to display information about. An interface-list can be: • a PPP interface (e.g. ppp0), an Eth interface (e.g. eth1), a VLAN (e.g. vlan2), a LAN port (e.g. port1.0.4), a static channel group (e.g. sa2) or a dynamic (LACP) channel group (e.g. po2) • a continuous range of interfaces, ports, static channel groups or dynamic (LACP) channel groups, separated by a hyphen (e.g. vlan2-8, or port1.0.1-1.0.4, or sa1-2, or po1-2) • a comma-separated list of the above (e.g. vlan2,vlan20-30). Do not mix interface types in a list. The specified interfaces must exist.
`lacp`	Displays running configuration for LACP (Link Aggregation Control Protocol) for the specified interfaces.
`ip igmp`	Displays running configuration for IGMP (Internet Group Management Protocol) for the specified interfaces.
`ip multicast`	Displays running configuration for general multicast settings for the specified interfaces.
`ip pim sparse-mode`	Displays running configuration for PIM-SM (Protocol Independent Multicast - Sparse Mode) for the specified interfaces.
`ip pim dense-mode`	Displays running configuration for PIM-DM (Protocol Independent Multicasting - Dense Mode) for the specified interfaces.
`mstp`	Displays running configuration for MSTP (Multiple Spanning Tree Protocol) for the specified interfaces.
`ospf`	Displays running configuration for OSPF (Open Shortest Path First) for the specified interfaces.
`rip`	Displays running configuration for RIP (Routing Information Protocol) for the specified interfaces.
`ipv6 rip`	Displays running configuration for RIPng (RIP for IPv6) for the specified interfaces.

Parameter	Description
`rstp`	Displays running configuration for RSTP (Rapid Spanning Tree Protocol) for the specified interfaces.
`stp`	Displays running configuration for STP (Spanning Tree Protocol) for the specified interfaces.

Mode Privileged Exec and Global Configuration

Default Displays information for all protocols on all interfaces

Examples To display the current running configuration of your device for ports 1 to 4, use the command:

```
awplus# show running-config interface port1.0.1-port1.0.4
```

To display the current running configuration of a device for VLAN 1, use the command:

```
awplus# show running-config interface vlan1
```

To display the current running configuration of a device for VLANs 1 and 3-5, use the command:

```
awplus# show running-config interface vlan1,vlan3-vlan5
```

To display the current OSPF configuration of your device for ports 1 to 6, use the command:

```
awplus# show running-config interface port1.0.1-port1.0.6 ospf
```

Output Figure 2-11: Example output from a **show running-config interface ppp0** command

```
awplus#show running-config interface ppp0
!
interface ppp0
 ipv6 address 2001:db9::a3/64
 ipv6 enable
 snmp trap link-status
!
```

Related Commands copy running-config

show running-config

show startup-config

Overview This command displays the contents of the start-up configuration file, which is the file that the device runs on start-up.

For information on filtering and saving command output, see the "Getting Started with AlliedWare Plus" Feature Overview and Configuration Guide.

Syntax
```
show startup-config
```

Mode Privileged Exec

Example To display the contents of the current start-up configuration file, use the command:

```
awplus# show startup-config
```

Output Figure 2-12: Example output from the **show startup-config** command

```
awplus#show startup-config
!
service password-encryption
!
no banner motd
!
username manager privilege 15 password 8 $1$bJoVec4D$JwOJGPr7YqoExA0GVasdE0
!
no service ssh
!
service telnet
!
no clock timezone
.
.
.
line con 0
line vty 0 4
!
end
```

Related Commands

boot config-file backup

copy running-config

copy startup-config

erase startup-config

show boot

show version

Overview This command displays the version number and copyright details of the current AlliedWare Plus™ OS your device is running.

Syntax

```
show version
```

Mode User Exec and Privileged Exec

Example To display the version details of your currently installed software, use the command:

```
awplus# show version
```

Output Figure 2-13: Example output from **show version**

```
awplus#show version

AlliedWare Plus (TM) 5.4.5 03/19/15 21:15:14

Build name : AR3050S-5.4.5-0.1.rel
Build date : Thu Mar 19 21:15:30 UTC 2015
Build type : RELEASE

 Application Interface Specification Framework
   Copyright (c) 2002-2004 MontaVista Software, Inc;
   Copyright (c) 2005-2010 Red Hat, Inc.
 Command Line Option Parsing Library
   Copyright (c) 1998-2002  Red Hat Software Inc.
 Corosync Cluster Engine
   Copyright (c) 2002-2004 MontaVista Software, Inc. All rights reserved;
   Copyright (c) 2005-2010 Red Hat, Inc.
 DHCP Bind
   Copyright (c) 2005 - 2008, Holger Zuleger HZnet. All rights reserved.
   Copyright (c) 2004-2012  Internet Systems Consortium, Inc. ("ISC").
   Copyright (c) 1996-2003  Internet Software Consortium.
   Copyright (c) 1996-2001  Nominum, Inc.
   Copyright (c) 1995-2000 by Network Associates, Inc.
   Copyright (c) 2002 Stichting NLnet, Netherlands, stichting@nlnet.nl.
   Copyright (c) 1987, 1990, 1993, 1994
      The Regents of the University of California.  All rights reserved.
   Copyright (c) The Internet Society 2005.
      This version of this module is part of RFC 4178; see the RFC itself
      full legal notices.
Copyright (c) 2004 Masarykova universita
 (Masaryk University, Brno, Czech Republic). All rights reserved.
 Copyright (c) 1997 - 2003 Kungliga Tekniska Högskolan
 (Royal Institute of Technology, Stockholm, Sweden).
 All rights reserved.
```

```
Copyright (c) 1998 Doug Rabson. All rights reserved.
 Copyright (c) 2002, Rice University. All rights reserved.
 Copyright (c) 1993 by Digital Equipment Corporation.
 Copyright (c) 2000 Aaron D. Gifford. All rights reserved.
 Copyright (c) 1998 Doug Rabson.
 Copyright (c) 2001 Jake Burkholder. All rights reserved.
Copyright (c) 1995, 1996, 1997, and 1998 WIDE Project.
 All rights reserved.
 Copyright (c) 1999-2000 by Nortel Networks Corporation
 Copyright (c) 2000-2002 Japan Network Information Center.
 All rights reserved.
 Copyright (c) 2004 Nominet, Ltd. Portions Copyright RSA Security Inc.
Copyright (c) 1996, David Mazieres <dm@uun.org>
 Copyright (c) 2008, Damien Miller <djm@openbsd.org>
 Copyright (c) 2000-2001 The OpenSSL Project. All rights reserved.
 DHCP Library
 Copyright (c) 2004-2012 by Internet Systems Consortium, Inc. ("ISC")
 Copyright (c) 1995-2003 by Internet Software Consortium.
Embedded GNU C Library
 Copyright (c) 1991 Regents of the University of California.
 All rights reserved.
 DNS Resolver from BIND 4.9.5
 Copyright (c) 1993 by Digital Equipment Corporation.
 Sun RPC Support
 Copyright (c) 2010, Oracle America, Inc.
 Mach Operating System
 Copyright (c) 1991,1990,1989 Carnegie Mellon University.
 All Rights Reserved.
EventLog
 Copyright (c) 1992, 1993, 1994, 1995, 1996, 1997, 1998, 1999, 2000, 2001,
 2002, 2003, 2004, 2005 Free Software Foundation, Inc.
 Copyright (c) 2003 BalaBit IT Ltd. All rights reserved.
 Author: Balazs Scheidler
 Expat
 Copyright (c) 1998, 1999, 2000 Thai Open Source Software Center Ltd
 and Clark Cooper.
 Copyright (c) 2001, 2002, 2003, 2004, 2005, 2006 Expat maintainers.
Fast Lexical Analyser Generator
 Copyright (c) 2001, 2002, 2003, 2004, 2005, 2006, 2007 The Flex Project.
 Copyright (c) 1990, 1997 The Regents of the University of California.
 All rights reserved.
 File Utility Library
 Copyright (c) Ian F. Darwin 1986-1987, 1989-1992, 1994-1995.
 Software written by Ian F. Darwin and others;
 maintained 1994- Christos Zoulas.
FreeRADIUS
 Copyright (c) 1999, 2000, 2001, 2002, 2003, 2004, 2005, 2006, 2007, 2008,
 2009 The FreeRADIUS Server Project
 Copyright (c) 1999, 2000, 2001, 2002, 2003, 2004, 2005, 2006, 2007, 2008,
 2009 Alan DeKok <aland@deployingradius.com>.
 Copyright (c) 1996, 1997, 1999, 2000, 2002, 2003, 2004, 2005
 Free Software Foundation, Inc.
```

```
Copyright (c) 2003, 2004, 2005 Kostas Kalevras <kkalev@noc.ntua.gr>
 Copyright (c) 2004 Cladju Consulting, Inc.
 Copyright (c) 2001, 2002, 2003, 2004, 2005 Google, Inc.
 Copyright (c) 2003, 2004 Michael Richardson <mcr@sandelman.ottawa.on.ca>
 Copyright (c) 2002, 2003, 2004 Novell, Inc.
 Copyright (c) 2002 Miguel A.L. Paraz <mparaz@mparaz.com>
 Copyright (c) 2002 Simon Ekstrand <simon@routemeister.net>
Copyright (c) 2001 Chad Miller <cmiller@surfsouth.com>
 Copyright (c) 2001 hereUare Communications, Inc.
 Copyright (c) 2000 Jochen Friedrich <jochen@scram.de>
 Copyright (c) 2000, 2002 Miquel van Smoorenburg
 Copyright (c) 2000 Jeff Carneal <jeff@apex.net>
 Copyright (c) 2000 Alan Curry <pacman@world.std.com>
Copyright (c) 2000 David Kerry <davidk@snti.com>
 Copyright (c) 2000 Dmitri Ageev <d_ageev@ortcc.ru>
 Copyright (c) 2000 Nathan Neulinger <nneul@umr.edu>
 Copyright (c) 2000 Mike Machado <mike@innercite.com>
 Copyright (c) 2000, 2001 Chad Miller <cmiller@surfsouth.com>
   Copyright (c) 1997, 1998, 1999 Cistron Internet Services B.V.
   Copyright (c) 1999 Kunihiro Ishiguro <kunihiro@zebra.org>
 Hardware Platform Interface Library
   Copyright (c) 2004 by Intel Corp;
   Copyright (C) IBM Corp. 2004-2008.
IPSec Tools
 Copyright (c) 1995, 1996, 1997, 1998, and 1999 WIDE Project.
 All rights reserved.
 Copyright (c) 2000 Wasabi Systems, Inc. All rights reserved.
 Copyright (c) 2004-2006 Emmanuel Dreyfus. All rights reserved.
 Copyright (c) 2004 SuSE Linux AG, Nuernberg, Germany.
 Contributed by: Michal Ludvig <mludvig@suse.cz>, SUSE Labs.
 All rights reserved.
 Copyright (c) 2008 Timo Teras. All rights reserved.
 Copyright (c) 1984, 1989, 1990, 2000, 2001, 2002, 2003, 2004, 2005, 2006
 Free Software Foundation, Inc.
libcap2 - Support for getting/setting POSIX.1e capabilities
 Copyright (c) 1997-9,2007-2011 Andrew G Morgan <morgan@kernel.org>
 Copyright (C) 2010 Serge Hallyn <serue@us.ibm.com>
 Copyright (C) 1997 Aleph One
 LibHTP - A security-aware parser for the HTTP protocol
 Copyright (c) 2009-2010 Open Information Security Foundation
 Copyright (c) 2010-2013 Qualys, Inc.
 All rights reserved.
Libnet - An API for construction and handling of network packets
 Copyright (c) 1998 - 2002 Mike D. Schiffman <mike@infonexus.com>
 http://www.packetfactory.net/libnet
 LIBNET 1.1.3+ (c) 2009 - 2012 Sam Roberts <vieuxtech@gmail.com>
 libpcap - An API for user-level packet capture
 Copyright (c) 1990, 1991, 1992, 1993, 1994, 1995, 1996, 1997, 1998
 The Regents of the University of California. All rights reserved.
Linux Utilities
 Copyright (C) 1989, 1991 Free Software Foundation, Inc.
 675 Mass Ave, Cambridge, MA 02139, USA
 Copyright (c) 1989 The Regents of the University of California.
 All rights reserved.
 MD5 Message Digest Algorithm
 Copyright (c) 1990-2, RSA Data Security, Inc. Created 1991.
 All rights reserved.
```

```
NET-SNMP SNMP agent software
 (c) 1996, 1998-2000 The Regents of the University of California.
 All rights reserved;
 (c) 2001-2003, Networks Associates Technology, Inc. All rights reserved;
 (c) 2001-2003, Cambridge Broadband Ltd. All rights reserved;
 (c) 2003, Sun Microsystems, Inc. All rights reserved;
 (c) 2003-2006, Sparta, Inc. All rights reserved;
 (c) 2004, Cisco, Inc and Information Network
 Center of Beijing University of Posts and Telecommunications.
 All rights reserved.
 Network Time Protocol
   Copyright (c) 1970-2014 University of Delaware.  All rights reserved.
   Copyright (c) 1984, 1989-1990, 2000-2012 Free Software Foundation, Inc.
 OpenSSL Library
   Copyright (c) 1998-2011 The OpenSSL Project
   Copyright (c) 1995-1998 Eric A. Young, Tim J. Hudson
   All rights reserved.
 PCI Bus Utilities
   Copyright (c) 1997--2003 Martin Mares <mj@ucw.cz>
 PCRE - Perl Compatible Regular Expressions
   Copyright (c) 1997-2013 University of Cambridge. All rights reserved.
   Copyright(c) 2009-2013 Zoltan Herczeg. All rights reserved.
   Copyright (c) 2007-2012, Google Inc. All rights reserved
ProL2TP
 Copyright Katalix Systems Ltd, 2010, 2011. All rights reserved.
 protobuf - Protocol Buffers
 Copyright 2008, Google Inc
 Protocol Buffers, Google's data interchange format - C implementation
 Copyright (c) 2008-2014, Dave Benson and the protobuf-c authors.
 All rights reserved.
pppd - Point-to-Point Protocol Daemon
 Copyright (c) 1984-2000 Carnegie Mellon University. All rights reserved.
 Copyright (c) 1993-2004 Paul Mackerras. All rights reserved.
 Copyright (c) 1995 Pedro Roque Marques. All rights reserved.
 Copyright (c) 1995 Eric Rosenquist. All rights reserved.
 Copyright (c) 1999 Tommi Komulainen. All rights reserved.
 Copyright (C) Andrew Tridgell 1999
 Copyright (c) 2000 by Sun Microsystems, Inc. All rights reserved.
 Copyright (c) 2001 by Sun Microsystems, Inc. All rights reserved.
 Copyright (c) 2002 Google, Inc. All rights reserved.
Racoon2 - A key management system for IPsec
 Copyright (C) 2004, 2005 WIDE Project. All rights reserved.
 Copyright (C) 2004 Emmanuel Dreyfus. All rights reserved.
 Copyright (C) 2004 SuSE Linux AG, Nuernberg, Germany.
 Contributed by: Michal Ludvig <mludvig@suse.cz>, SUSE Labs
 All rights reserved.
 Copyright (c) 1991, 1993
 The Regents of the University of California. All rights reserved.
 Copyright (c) 1998 Todd C. Miller <Todd.Miller@courtesan.com>
 All rights reserved.
```

```
RSA Data Security, Inc. MD5 Message-Digest Algorithm
 (c) 1991-2, RSA Data Security, Inc. Created 1991. All rights reserved.
 Secure Shell
 OpenSSH
 Copyright (c) 1995 Tatu Ylonen <ylo@cs.hut.fi>, Espoo, Finland.
 All rights reserved.
 Copyright (c) 1983, 1990, 1992, 1993, 1995
 The Regents of the University of California. All rights reserved.
Cryptographic attack detector
 Copyright (c) 1998 CORE SDI S.A., Buenos Aires, Argentina.
 Ssh-keyscan
 Copyright (c) 1995, 1996 by David Mazieres <dm@lcs.mit.edu>.
 sFlow(R) Agent Software
 Copyright (c) 2002-2006 InMon Corp.
Sudo
 Copyright (c) 1994-1996, 1998-2014
 Todd C. Miller <Todd.Miller@courtesan.com>
 Copyright (c) 2001 Emin Martinian
 Copyright (c) 1989, 1990, 1991, 1993
 The Regents of the University of California. All rights reserved.
 Copyright (c) 2011, VMware, Inc. All rights reserved.
 Copyright (c) 2000 The NetBSD Foundation, Inc. All rights reserved.
 Copyright (c) 1996 by Internet Software Consortium.
 Copyright (C) 1995-2012 Jean-loup Gailly and Mark Adler
 System Call Trace
   Copyright (c) 1991, 1992 Paul Kranenburg <pk@cs.few.eur.nl>
   Copyright (c) 1993 Branko Lankester <branko@hacktic.nl>
   Copyright (c) 1993 Ulrich Pegelow <pegelow@moorea.uni-muenster.de>
   Copyright (c) 1995, 1996
      Michael Elizabeth Chastain <mec@duracef.shout.net>
   Copyright (c) 1993, 1994, 1995, 1996 Rick Sladkey <jrs@world.std.com>
   Copyright (c) 1998-2001 Wichert Akkerman <wakkerma@deephackmode.org>
      All rights reserved.
 TCP Dump Utility
   Copyright (c) 1988-1997, 2000
      The Regents of the University of California.  All rights reserved.
 Telnet
   Copyright (c) 1983, 1995 Eric P. Allman
   Copyright (c) 1988, 1990, 1991 and 1993
      The Regents of the University of California.  All rights reserved.
TIPC Utilities
 Copyright (c) 2004-2005, Ericsson Research Canada
 Copyright (c) 2004-2006, Ericsson AB
 Copyright (c) 2005-2008,2010-2011, Wind River Systems
 Copyright (c) 2012, Compass EOS Ltd http://compass-eos.com/
 All rights reserved.

Portions of this product are covered by the GNU (L)GPL, source code may be
downloaded from: http://www.alliedtelesis.co.nz/support/gpl/awp.html
```

Related Commands

boot system backup

show boot

unmount

Overview Use this command to unmount an external storage device. We recommend you unmount storage devices before removing them, to avoid file corruption. This is especially important if files may be automatically written to the storage device, such as external log files or AMF backup files.

Syntax

```
unmount usb
```

Parameter	Description
`usb`	Unmount the USB storage device.

Mode Privileged Exec

Example To unmount a USB storage device and safely remove it from the device, use the command:

```
awplus# unmount usb
```

Related Commands

clear log external

log external

show file systems

show log config

show log external

Command changes Version 5.4.7-1.1: command added

write file

Overview This command copies the running-config into the file that is set as the current startup-config file. This command is a synonym of the **write memory** and **copy running-config startup-config** commands.

Syntax

```
write [file]
```

Mode Privileged Exec

Example To write configuration data to the start-up configuration file, use the command:

```
awplus# write file
```

Related Commands

copy running-config

write memory

show running-config

write memory

Overview This command copies the running-config into the file that is set as the current startup-config file. This command is a synonym of the **write file** and **copy running-config startup-config** commands.

Syntax

```
write [memory]
```

Mode Privileged Exec

Example To write configuration data to the start-up configuration file, use the command:

```
awplus# write memory
```

Related Commands

copy running-config

write file

show running-config

write terminal

Overview This command displays the current configuration of the device. This command is a synonym of the show running-config command.

Syntax

```
write terminal
```

Mode Privileged Exec

Example To display the current configuration of your device, use the command:

```
awplus# write terminal
```

Related Commands show running-config

3 User Access Commands

Introduction

Overview This chapter provides an alphabetical reference of commands used to configure user access.

Command List

- "clear line console" on page 163
- "clear line vty" on page 164
- "enable password" on page 165
- "enable secret" on page 168
- "exec-timeout" on page 171
- "flowcontrol hardware (asyn/console)" on page 173
- "length (asyn)" on page 175
- "line" on page 176
- "privilege level" on page 178
- "security-password history" on page 179
- "security-password forced-change" on page 180
- "security-password lifetime" on page 181
- "security-password min-lifetime-enforce" on page 182
- "security-password minimum-categories" on page 183
- "security-password minimum-length" on page 184
- "security-password reject-expired-pwd" on page 185
- "security-password warning" on page 186
- "service advanced-vty" on page 187
- "service password-encryption" on page 188
- "service telnet" on page 189

- "show privilege" on page 190
- "show security-password configuration" on page 191
- "show security-password user" on page 192
- "show telnet" on page 193
- "show users" on page 194
- "telnet" on page 195
- "telnet server" on page 196
- "terminal length" on page 197
- "terminal resize" on page 198
- "username" on page 199

clear line console

Overview This command resets a console line. If a terminal session exists on the line then the terminal session is terminated. If console line settings have changed then the new settings are applied.

Syntax

```
clear line console 0
```

Mode Privileged Exec

Example To reset the console line (asyn), use the command:

```
awplus# clear line console 0
awplus# % The new settings for console line 0 have been applied
```

Related Commands

clear line vty

flowcontrol hardware (asyn/console)

line

show users

clear line vty

Overview This command resets a VTY line. If a session exists on the line then it is closed.

Syntax

```
clear line vty <0-32>
```

Parameter	Description
<0-32>	Line number

Mode Privileged Exec

Example To reset the first VTY line, use the command:

```
awplus# clear line vty 1
```

Related Commands

privilege level

line

show telnet

show users

enable password

Overview To set a local password to control access to various privilege levels, use the enable password Global Configuration command. Use the enable password command to modify or create a password to be used, and use the no enable password command to remove the password.

Note that the enable secret command is an alias for the enable password command, and the no enable secret command is an alias for the no enable password command. Issuing a no enable password command removes a password configured with the enable secret command. The enable password command is shown in the running and startup configurations. Note that if the enable secret command is entered then enable password is shown in the configuration.

Syntax

```
enable password [<plain>|8 <hidden>|level <1-15> 8 <hidden>]
no enable password [level <1-15>]
```

Parameter	Description
<plain>	Specifies the unencrypted password.
8	Specifies a hidden password will follow.
<hidden>	Specifies the hidden encrypted password. Use an encrypted password for better security where a password crosses the network or is stored on a TFTP server.
level	Privilege level <1-15>. Level for which the password applies. You can specify up to 16 privilege levels, using numbers 1 through 15. Level 1 is normal EXEC-mode user privileges for User Exec mode. If this argument is not specified in the command or the **no** variant of the command, the privilege level defaults to 15 (enable mode privileges) for Privileged Exec mode. A privilege level of 7 can be set for intermediate CLI security.

Default The privilege level for enable password is level 15 by default. Previously the default was level 1.

Mode Global Configuration

Usage This command enables the Network Administrator to set a password for entering the Privileged Exec mode when using the enable (Privileged Exec mode) command. There are three methods to enable a password. In the examples below, for each method, note that the configuration is different and the configuration file output is different, but the password string to be used to enter the Privileged Exec mode with the **enable** command is the same (**mypasswd**).

A user can now have an intermediate CLI security level set with this command for privilege level 7 to access all the show commands in Privileged Exec mode and all the commands in User Exec mode, but not any configuration commands in Privileged Exec mode.

Note that the enable password command is an alias for the enable secret command and one password per privilege level is allowed using these commands. Do not assign one password to a privilege level with enable password and another password to a privilege level with enable secret. Use enable password or enable secret commands. Do not use both on the same level.

Using plain passwords

The plain password is a clear text string that appears in the configuration file as configured.

```
awplus# configure terminal
awplus(config)# enable password mypasswd
awplus(config)# end
```

This results in the following show output:

```
awplus#show run
Current configuration:
hostname awplus
enable password mypasswd
!
interface lo
```

Using encrypted passwords

You can configure an encrypted password using the service password-encryption command. First, use the enable password command to specify the string that you want to use as a password (**mypasswd**). Then, use the service password-encryption command to encrypt the specified string (**mypasswd**). The advantage of using an encrypted password is that the configuration file does not show **mypasswd**, it will only show the encrypted string **fU7zHzuutY2SA**.

```
awplus# configure terminal
awplus(config)# enable password mypasswd
awplus(config)# service password-encryption
awplus(config)# end
```

This results in the following show output:

```
awplus#show run
Current configuration:
hostname awplus
enable password 8 fU7zHzuutY2SA
service password-encryption
!
interface lo
```

Using hidden passwords

You can configure an encrypted password using the **HIDDEN** parameter (**8**) with the enable password command. Use this method if you already know the encrypted string corresponding to the plain text string that you want to use as a password. It is not required to use the service password-encryption command for

this method. The output in the configuration file will show only the encrypted string, and not the text string.

```
awplus# configure terminal
awplus(config)# enable password 8 fU7zHzuutY2SA
awplus(config)# end
```

This results in the following show output:

```
awplus#show run
Current configuration:
hostname awplus
enable password 8 fU7zHzuutY2SA
!
interface lo
```

Related Commands

enable (Privileged Exec mode)

enable secret

service password-encryption

privilege level

show privilege

username

show running-config

enable secret

Overview To set a local password to control access to various privilege levels, use the enable secret Global Configuration command. Use the enable secret command to modify or create a password to be used, and use the no enable secret command to remove the password.

Note that the enable secret command is an alias for the enable password command, and the no enable secret command is an alias for the no enable password command. Issuing a no enable password command removes a password configured with the enable secret command. The enable password command is shown in the running and startup configurations. Note that if the enable secret command is entered then enable password is shown in the configuration

Syntax

```
enable secret [<plain>|8 <hidden>|level <0-15> 8 <hidden>]
no enable secret [level <1-15>]
```

Parameter	Description
`<plain>`	Specifies the unencrypted password.
`8`	Specifies a hidden password will follow.
`<hidden>`	Specifies the hidden encrypted password. Use an encrypted password for better security where a password crosses the network or is stored on a TFTP server.
`level`	Privilege level <1-15>. Level for which the password applies. You can specify up to 16 privilege levels, using numbers 1 through 15. Level 1 is normal EXEC-mode user privileges for User Exec mode. If this argument is not specified in the command or the **no** variant of the command, the privilege level defaults to 15 (enable mode privileges) for Privileged Exec mode. A privilege level of 7 can be set for intermediate CLI security.

Default The privilege level for enable secret is level 15 by default.

Mode Global Configuration

Usage This command enables the Network Administrator to set a password for entering the Privileged Exec mode when using the enable (Privileged Exec mode) command. There are three methods to enable a password. In the examples below, for each method, note that the configuration is different and the configuration file output is different, but the password string to be used to enter the Privileged Exec mode with the **enable** command is the same (**mypasswd**).

A user can have an intermediate CLI security level set with this command for privilege level 7 to access all the show commands in Privileged Exec mode and all the commands in User Exec mode, but not any configuration commands in Privileged Exec mode.

Note that the enable secret command is an alias for the enable password command and one password per privilege level is allowed using these commands. Do not assign one password to a privilege level with enable password and another password to a privilege level with enable secret. Use enable password or enable secret commands. Do not use both on the same level.

Using plain passwords

The plain password is a clear text string that appears in the configuration file as configured.

```
awplus# configure terminal
awplus(config)# enable secret mypasswd
awplus(config)# end
```

This results in the following show output:

```
awplus#show run
Current configuration:
hostname awplus
enable password mypasswd
!
interface lo
```

Using encrypted passwords

Configure an encrypted password using the service password-encryption command. First, use the enable password command to specify the string that you want to use as a password (**mypasswd**). Then, use the service password-encryption command to encrypt the specified string (**mypasswd**). The advantage of using an encrypted password is that the configuration file does not show **mypasswd**, it will only show the encrypted string **fU7zHzuutY2SA**.

```
awplus# configure terminal
awplus(config)# enable secret mypasswd
awplus(config)# service password-encryption
awplus(config)# end
```

This results in the following show output:

```
awplus#show run
Current configuration:
hostname awplus
enable password 8 fU7zHzuutY2SA
service password-encryption
!
interface lo
```

Using hidden passwords

Configure an encrypted password using the **HIDDEN** parameter (**8**) with the **enable password** command. Use this method if you already know the encrypted string corresponding to the plain text string that you want to use as a password. It is not required to use the service password-encryption command for this method.

The output in the configuration file will show only the encrypted string, and not the text string:

```
awplus# configure terminal
awplus(config)# enable secret 8 fU7zHzuutY2SA
awplus(config)# end
```

This results in the following show output:

```
awplus#show run
Current configuration:
hostname awplus
enable password 8 fU7zHzuutY2SA
!
interface lo
```

Related Commands

enable (Privileged Exec mode)

enable secret

service password-encryption

privilege level

show privilege

username

show running-config

exec-timeout

Overview This command sets the interval your device waits for user input from either a console or VTY connection. Once the timeout interval is reached, the connection is dropped. This command sets the time limit when the console or VTY connection automatically logs off after no activity.

The **no** variant of this command removes a specified timeout and resets to the default timeout (10 minutes).

Syntax

```
exec-timeout {<minutes>} [<seconds>]
no exec-timeout
```

Parameter	Description
<minutes>	<0-35791> Required integer timeout value in minutes
<seconds>	<0-2147483> Optional integer timeout value in seconds

Default The default for the **exec-timeout** command is 10 minutes and 0 seconds (**exec-timeout 10 0**).

Mode Line Configuration

Usage This command is used set the time the telnet session waits for an idle VTY session, before it times out. An **exec-timeout 0 0** setting will cause the telnet session to wait indefinitely. The command **exec-timeout 0 0** is useful while configuring a device, but reduces device security.

If no input is detected during the interval then the current connection resumes. If no connections exist then the terminal returns to an idle state and disconnects incoming sessions.

Examples To set VTY connections to timeout after 2 minutes, 30 seconds if there is no response from the user, use the following commands:

```
awplus# configure terminal
awplus(config)# line vty 0 32
awplus(config-line)# exec-timeout 2 30
```

To reset the console connection to the default timeout of 10 minutes 0 seconds if there is no response from the user, use the following commands:

```
awplus# configure terminal
awplus(config)# line console 0
awplus(config-line)# no exec-timeout
```

Validation Commands show running-config

Related Commands

line

service telnet

flowcontrol hardware (asyn/console)

Overview Use this command to enable RTS/CTS (Ready To Send/Clear To Send) hardware flow control on a terminal console line (asyn port) between the DTE (Data Terminal Equipment) and the DCE (Data Communications Equipment).

Syntax

```
flowcontrol hardware
no flowcontrol hardware
```

Mode Line Configuration

Default Hardware flow control is disabled by default.

Usage Hardware flow control makes use of the RTS and CTS control signals between the DTE and DCE where the rate of transmitted data is faster than the rate of received data. Flow control is a technique for ensuring that a transmitting entity does not overwhelm a receiving entity with data. When the buffers on the receiving device are full, a message is sent to the sending device to suspend the transmission until the data in the buffers has been processed.

Hardware flow control can be configured on terminal console lines (e.g. asyn0). For Reverse Telnet connections, hardware flow control must be configured to match on both the Access Server and the Remote Device. For terminal console sessions, hardware flow control must be configured to match on both the DTE and the DCE. Settings are saved in the running configuration. Changes are applied after reboot, clear line console, or after closing the session.

Use **show running-config** and **show startup-config** commands to view hardware flow control settings that take effect after reboot for a terminal console line. See the **show running-config** command output:

```
awplus#show running-config
!
line con 1
  speed 9600
  mode out 2001
  flowcontrol hardware
!
```

Note that line configuration commands do not take effect immediately. Line configuration commands take effect after one of the following commands or events:

- issuing a clear line console command
- issuing a reboot command
- logging out of the current session

Examples

To enable hardware flow control on terminal console line asyn0, use the commands:

```
awplus# configure terminal
awplus(config)# line console 0
awplus(config-line)# flowcontrol hardware
```

To disable hardware flow control on terminal console line asyn0, use the commands:

```
awplus# configure terminal
awplus(config)# line console 0
awplus(config-line)# no flowcontrol hardware
```

Related Commands

clear line console

show running-config

speed (asyn)

length (asyn)

Overview Use this command to specify the number of rows of output that the device will display before pausing, for the console or VTY line that you are configuring.

The **no** variant of this command restores the length of a line (terminal session) attached to a console port or to a VTY to its default length of 22 rows.

Syntax

```
length <0-512>
no length
```

Parameter	Description
<0-512>	Number of lines on screen. Specify 0 for no pausing.

Mode Line Configuration

Default The length of a terminal session is 22 rows. The **no length** command restores the default.

Usage If the output from a command is longer than the length of the line the output will be paused and the '–More–' prompt allows you to move to the next screen full of data.

A length of 0 will turn off pausing and data will be displayed to the console as long as there is data to display.

Examples To set the terminal session length on the console to 10 rows, use the command:

```
awplus# configure terminal
awplus(config)# line console 0
awplus(config-line)# length 10
```

To reset the terminal session length on the console to the default (22 rows), use the command:

```
awplus# configure terminal
awplus(config)# line console 0
awplus(config-line)# no length
```

To display output to the console continuously, use the command:

```
awplus# configure terminal
awplus(config)# line console 0
awplus(config-line)# length 0
```

Related Commands terminal resize

terminal length

line

Overview Use this command to enter line configuration mode for the specified VTYs or the console. The command prompt changes to show that the device is in Line Configuration mode.

Syntax

```
line vty <first-line> [<last-line>]
line console 0
```

Parameter	Description
<first-line>	*<0-32>* Specify the first line number.
<last-line>	*<0-32>* Specify the last line number.
`console`	The console terminal line(s) for local access.
`vty`	Virtual terminal for remote console access.

Mode Global Configuration

Usage This command puts you into Line Configuration mode. Once in Line Configuration mode, you can configure console and virtual terminal settings, including setting speed (asyn), length (asyn), privilege level, and authentication (login authentication) or accounting (accounting login) method lists.

To change the console (asyn) port speed, use this **line** command to enter Line Configuration mode before using the speed (asyn)command. Set the console speed (Baud rate) to match the transmission rate of the device connected to the console (asyn) port on your device.

Note that line configuration commands do not take effect immediately. Line configuration commands take effect after one of the following commands or events:

- issuing a clear line console command
- issuing a reboot command
- logging out of the current session

Examples To enter Line Configuration mode in order to configure all VTYs, use the commands:

```
awplus# configure terminal
awplus(config)# line vty 0 32
awplus(config-line)#
```

To enter Line Configuration mode to configure the console (asyn 0) port terminal line, use the commands:

```
awplus# configure terminal
awplus(config)# line console 0
awplus(config-line)#
```

Related Commands

accounting login

clear line console

clear line vty

flowcontrol hardware (asyn/console)

length (asyn)

login authentication

privilege level

speed (asyn)

privilege level

Overview This command sets a privilege level for VTY or console connections. The configured privilege level from this command overrides a specific user's initial privilege level at the console login.

Syntax

```
privilege level <1-15>
```

Mode Line Configuration

Usage You can set an intermediate CLI security level for a console user with this command by applying privilege level 7 to access all show commands in Privileged Exec and all User Exec commands. However, intermediate CLI security will not show configuration commands in Privileged Exec.

Examples To set the console connection to have the maximum privilege level, use the following commands:

```
awplus# configure terminal
awplus(config)# line console 0
awplus(config-line)# privilege level 15
```

To set all VTY connections to have the minimum privilege level, use the following commands:

```
awplus# configure terminal
awplus(config)# line vty 0 5
awplus(config-line)# privilege level 1
```

To set all VTY connections to have an intermediate CLI security level, to access all show commands, use the following commands:

```
awplus# configure terminal
awplus(config)# line vty 0 5
awplus(config-line)# privilege level 7
```

Related Commands

enable password

line

show privilege

username

security-password history

Overview This command specifies the number of previous passwords that are unable to be reused. A new password is invalid if it matches a password retained in the password history.

The **no** variant of the command disables this feature.

Syntax

```
security-password history <0-15>
no security-password history
```

Parameter	Description
<0-15>	The allowable range of previous passwords to match against. A value of *0* will disable the history functionality and is equivalent to the **no security-password history** command. If the history functionality is disabled, all users' password history is reset and all password history is lost.

Default The default history value is `0`, which will disable the history functionality.

Mode Global Configuration

Examples To restrict reuse of the three most recent passwords, use the command:

```
awplus# configure terminal
awplus(config)# security-password history 3
```

To allow the reuse of recent passwords, use the command:

```
awplus# configure terminal
awplus(config)# no security-password history
```

Related Commands

security-password forced-change

security-password lifetime

security-password min-lifetime-enforce

security-password minimum-categories

security-password minimum-length

security-password reject-expired-pwd

security-password warning

show running-config security-password

show security-password configuration

show security-password user

security-password forced-change

Overview This command specifies whether or not a user is forced to change an expired password at the next login. If this feature is enabled, users whose passwords have expired are forced to change to a password that must comply with the current password security rules at the next login.

Note that to use this command, the lifetime feature must be enabled with the security-password lifetime command and the reject-expired-pwd feature must be disabled with the security-password reject-expired-pwd command.

The **no** variant of the command disables this feature.

Syntax

```
security-password forced-change
no security-password forced-change
```

Default The forced-change feature is disabled by default.

Mode Global Configuration

Example To force a user to change their expired password at the next login, use the command:

```
awplus# configure terminal
awplus(config)# security-password forced-change
```

Related Commands

security-password history

security-password lifetime

security-password min-lifetime-enforce

security-password minimum-categories

security-password minimum-length

security-password reject-expired-pwd

security-password warning

show running-config security-password

show security-password configuration

show security-password user

security-password lifetime

Overview This command enables password expiry by specifying a password lifetime in days.

Note that when the password lifetime feature is disabled, it also disables the security-password forced-change command and the security-password warning command.

The **no** variant of the command disables this feature.

Syntax

```
security-password lifetime <0-1000>
no security-password lifetime
```

Parameter	Description
<0-1000>	Password lifetime specified in days. A value of *0* will disable lifetime functionality and the password will never expire. This is equivalent to the **no security-password lifetime** command.

Default The default password lifetime is `0`, which will disable the lifetime functionality.

Mode Global Configuration

Example To configure the password lifetime to 10 days, use the command:

```
awplus# configure terminal
awplus(config)# security-password lifetime 10
```

Related Commands

security-password forced-change

security-password history

security-password min-lifetime-enforce

security-password minimum-categories

security-password minimum-length

security-password reject-expired-pwd

security-password warning

show running-config security-password

show security-password configuration

show security-password user

security-password min-lifetime-enforce

Overview Use this command to configure a minimum number of days before a password can be changed by a user. With this feature enabled, once a user sets the password, the user cannot change it again until the minimum lifetime has passed.

Use the **no** variant of this command to remove the minimum lifetime.

Syntax

```
security-password min-lifetime-enforce <0-1000>
no security-password min-lifetime-enforce
```

Parameter	Description
<0-1000>	The minimum number of days before a password can be changed

Default By default, no minimum lifetime is enforced.

Mode Global Configuration

Usage The minimum lifetime is helpful in conjunction with a security policy that prevents people from re-using old passwords. For example, if you do not allow people to re-use any of their last 5 passwords, a person can bypass that restriction by changing their password 5 times in quick succession and then re-setting it to their previous password. The minimum lifetime prevents that by preventing people from changing their password in quick succession.

Example To force users to wait at least 2 days between changing passwords, use the command:

```
awplus(config)# security-password min-lifetime-enforce 2
```

Related Commands

security-password forced-change

security-password history

security-password lifetime

security-password minimum-categories

security-password minimum-length

security-password reject-expired-pwd

security-password warning

show running-config security-password

show security-password configuration

show security-password user

Command changes Version 5.4.7-0.2: command added

security-password minimum-categories

Overview This command specifies the minimum number of categories that the password must contain in order to be considered valid. The password categories are:

- uppercase letters: A to Z
- lowercase letters: a to z
- digits: 0 to 9
- special symbols: all printable ASCII characters not included in the previous three categories. The question mark (?) cannot be used as it is reserved for help functionality.

Note that to ensure password security, the minimum number of categories should align with the lifetime selected, i.e. the fewer categories specified the shorter the lifetime specified.

Syntax

```
security-password minimum-categories <1-4>
```

Parameter	Description
<1-4>	Number of categories the password must satisfy, in the range 1 to 4.

Default The default number of categories that the password must satisfy is `1`.

Mode Global Configuration

Example To configure the required minimum number of character categories to be `3`, use the command:

```
awplus# configure terminal
awplus(config)# security-password minimum-categories 3
```

Related Commands

security-password forced-change

security-password history

security-password lifetime

security-password min-lifetime-enforce

security-password minimum-length

security-password reject-expired-pwd

security-password warning

show running-config security-password

show security-password configuration

show security-password user

security-password minimum-length

Overview This command specifies the minimum allowable password length. This value is checked against when there is a password change or a user account is created.

Syntax

```
security-password minimum-length <1-23>
```

Parameter	Description
<1-23>	Minimum password length in the range from 1 to 23.

Default The default minimum password length is `1`.

Mode Global Configuration

Example To configure the required minimum password length as `8`, use the command:

```
awplus# configure terminal
awplus(config)# security-password minimum-length 8
```

Related Commands

security-password forced-change

security-password history

security-password lifetime

security-password min-lifetime-enforce

security-password minimum-categories

security-password reject-expired-pwd

security-password warning

show running-config security-password

show security-password configuration

show security-password user

security-password reject-expired-pwd

Overview This command specifies whether or not a user is allowed to login with an expired password. Users with expired passwords are rejected at login if this functionality is enabled. Users then have to contact the Network Administrator to change their password.

CAUTION: *Once all users' passwords are expired you are unable to login to the device again if the security-password reject-expired-pwd command has been executed. You will have to reboot the device with a default configuration file, or load an earlier software version that does not have the security password feature.*

We recommend you never have the command line "security-password reject-expired-pwd" in a default config file.

Note that when the reject-expired-pwd functionality is disabled and a user logs on with an expired password, if the forced-change feature is enabled with security-password forced-change command, a user may have to change the password during login depending on the password lifetime specified by the security-password lifetime command.

The **no** variant of the command disables this feature.

Syntax

```
security-password reject-expired-pwd
no security-password reject-expired-pwd
```

Default The reject-expired-pwd feature is disabled by default.

Mode Global Configuration

Example To configure the system to reject users with an expired password, use the command:

```
awplus# configure terminal
awplus(config)# security-password reject-expired-pwd
```

Related Commands

security-password forced-change

security-password history

security-password lifetime

security-password min-lifetime-enforce

security-password minimum-categories

security-password minimum-length

security-password warning

show running-config security-password

show security-password configuration

show security-password user

security-password warning

Overview This command specifies the number of days before the password expires that the user will receive a warning message specifying the remaining lifetime of the password.

Note that the warning period cannot be set unless the lifetime feature is enabled with the security-password lifetime command.

The **no** variant of the command disables this feature.

Syntax

```
security-password warning <0-1000>
no security-password warning
```

Parameter	Description
<0-1000>	Warning period in the range from *0* to *1000* days. A value *0* disables the warning functionality and no warning message is displayed for expiring passwords. This is equivalent to the **no security-password warning** command. The warning period must be less than, or equal to, the password lifetime set with the security-password lifetime command.

Default The default warning period is 0, which disables warning functionality.

Mode Global Configuration

Example To configure a warning period of three days, use the command:

```
awplus# configure terminal
awplus(config)# security-password warning 3
```

Related Commands

security-password forced-change

security-password history

security-password lifetime

security-password min-lifetime-enforce

security-password minimum-categories

security-password minimum-length

security-password reject-expired-pwd

show running-config security-password

show security-password configuration

show security-password user

service advanced-vty

Overview This command enables the advanced-vty help feature. This allows you to use TAB completion for commands. Where multiple options are possible, the help feature displays the possible options.

The **no service advanced-vty** command disables the advanced-vty help feature.

Syntax

```
service advanced-vty
no service advanced-vty
```

Default The advanced-vty help feature is enabled by default.

Mode Global Configuration

Examples To disable the advanced-vty help feature, use the command:

```
awplus# configure terminal
awplus(config)# no service advanced-vty
```

To re-enable the advanced-vty help feature after it has been disabled, use the following commands:

```
awplus# configure terminal
awplus(config)# service advanced-vty
```

service password-encryption

Overview Use this command to enable password encryption. This is enabled by default. When password encryption is enabled, the device displays passwords in the running config in encrypted form instead of in plain text.

Use the **no service password-encryption** command to stop the device from displaying newly-entered passwords in encrypted form. This does not change the display of existing passwords.

Syntax

```
service password-encryption
no service password-encryption
```

Mode Global Configuration

Example

```
awplus# configure terminal
awplus(config)# service password-encryption
```

Validation Commands show running-config

Related Commands enable password

service telnet

Overview Use this command to enable the telnet server. The server is enabled by default. Enabling the telnet server starts the device listening for incoming telnet sessions on the configured port.

The server listens on port 23, unless you have changed the port by using the privilege level command.

Use the **no** variant of this command to disable the telnet server. Disabling the telnet server will stop the device listening for new incoming telnet sessions. However, existing telnet sessions will still be active.

Syntax

```
service telnet [ip|ipv6]
no service telnet [ip|ipv6]
```

Default The IPv4 and IPv6 telnet servers are enabled by default.

The configured telnet port is TCP port 23 by default.

Mode Global Configuration

Examples To enable both the IPv4 and IPv6 telnet servers, use the following commands:

```
awplus# configure terminal
awplus(config)# service telnet
```

To enable the IPv6 telnet server only, use the following commands:

```
awplus# configure terminal
awplus(config)# service telnet ipv6
```

To disable both the IPv4 and IPv6 telnet servers, use the following commands:

```
awplus# configure terminal
awplus(config)# no service telnet
```

To disable the IPv6 telnet server only, use the following commands:

```
awplus# configure terminal
awplus(config)# no service telnet ipv6
```

Related Commands

clear line vty

show telnet

telnet server

show privilege

Overview This command displays the current user privilege level, which can be any privilege level in the range <1-15>. Privilege levels <1-6> allow limited user access (all User Exec commands), privilege levels <7-14> allow restricted user access (all User Exec commands plus Privileged Exec show commands). Privilege level 15 gives full user access to all Privileged Exec commands.

Syntax

```
show privilege
```

Mode User Exec and Privileged Exec

Usage A user can have an intermediate CLI security level set with this command for privilege levels <7-14> to access all show commands in Privileged Exec mode and all commands in User Exec mode, but no configuration commands in Privileged Exec mode.

Example To show the current privilege level of the user, use the command:

```
awplus# show privilege
```

Output Figure 3-1: Example output from the **show privilege** command

```
awplus#show privilege
Current privilege level is 15
awplus#disable
awplus>show privilege
Current privilege level is 1
```

Related Commands privilege level

show security-password configuration

Overview This command displays the configuration settings for the various security password rules.

Syntax

```
show security-password configuration
```

Mode Privileged Exec

Example To display the current security-password rule configuration settings, use the command:

```
awplus# show security-password configuration
```

Output Figure 3-2: Example output from the **show security-password configuration** command

```
Security Password Configuration
Minimum password length ..............................  8
Minimum password character categories to match .....  3
Number of previously used passwords to restrict.....  4
Password lifetime ....................................  30 day(s)
  Warning period before password expires ............  3 day(s)
Reject expired password at login .....................  Disabled
  Force changing expired password at login .........  Enabled
```

Related Commands

security-password forced-change

security-password history

security-password lifetime

security-password min-lifetime-enforce

security-password minimum-categories

security-password minimum-length

security-password reject-expired-pwd

security-password warning

show security-password user

show security-password user

Overview This command displays user account and password information for all users.

Syntax

```
show security-password user
```

Mode Privileged Exec

Example To display the system users' remaining lifetime or last password change, use the command:

```
awplus# show security-password user
```

Output Figure 3-3: Example output from the **show security-password** user command

```
User account and password information

UserName          Privilege Last-PWD-Change   Remaining-lifetime
-------------------------------------------------------------------
manager           15          4625 day(s) ago   No Expiry
bob15             15             0 day(s) ago   30 days
ted7              7              0 day(s) ago   No Expiry
mike1             1              0 day(s) ago   No Expiry
```

Related Commands

security-password forced-change

security-password history

security-password lifetime

security-password min-lifetime-enforce

security-password minimum-categories

security-password minimum-length

security-password reject-expired-pwd

security-password warning

show security-password configuration

show telnet

Overview This command shows the Telnet server settings.

Syntax

```
show telnet
```

Mode User Exec and Privileged Exec

Example To show the Telnet server settings, use the command:

```
awplus# show telnet
```

Output Figure 3-4: Example output from the **show telnet** command

```
Telnet Server Configuration
-------------------------------------------------------------
Telnet server               : Enabled
Protocol                    : IPv4,IPv6
Port                        : 23
```

Related Commands

clear line vty

service telnet

show users

telnet server

show users

Overview This command shows information about the users who are currently logged into the device.

Syntax

```
show users
```

Mode User Exec and Privileged Exec

Example To show the users currently connected to the device, use the command:

```
awplus# show users
```

Output Figure 3-5: Example output from the **show users** command

```
Line     User             Host(s)  Idle      Location        Priv Idletime Timeout
con 0    manager          idle     00:00:00  ttyS0           15   10       N/A
vty 0    bob              idle     00:00:03  172.16.11.3     1    0        5
```

Table 1: Parameters in the output of the **show users** command

Parameter	Description
Line	Console port user is connected to.
User	Login name of user.
Host(s)	Status of the host the user is connected to.
Idle	How long the host has been idle.
Location	URL location of user.
Priv	The privilege level in the range 1 to 15, with 15 being the highest.
Idletime	The time interval the device waits for user input from either a console or VTY connection.
Timeout	The time interval before a server is considered unreachable.

telnet

Overview Use this command to open a telnet session to a remote device.

Syntax
```
telnet {<hostname>|[ip] <ipv4-addr>|[ipv6] <ipv6-addr>}
[<port>]
```

Syntax (VRF-lite)
```
telnet [vrf <vrf-name>] {<hostname>|[ip] <ipv4-addr>|[ipv6]
<ipv6-addr>} [<port>]
```

Parameter	Description
`vrf`	Apply this command to a VRF instance.
<vrf-name>	The name of the VRF instance.
<hostname>	The host name of the remote system.
`ip`	Keyword used to specify the IPv4 address or host name of a remote system.
<ipv4-addr>	An IPv4 address of the remote system.
`ipv6`	Keyword used to specify the IPv6 address of a remote system
<ipv6-addr>	Placeholder for an IPv6 address in the format `x:x::x:x`, for example, `2001:db8::8a2e:7334`
<port>	Specify a TCP port number (well known ports are in the range 1-1023, registered ports are 1024-49151, and private ports are 49152-65535).

Mode User Exec and Privileged Exec

Examples To connect to TCP port 2602 on the device at 10.2.2.2, use the command:

```
awplus# telnet 10.2.2.2 2602
```

To connect to the telnet server `host.example`, use the command:

```
awplus# telnet host.example
```

To connect to the telnet server `host.example` on TCP port `100`, use the command:

```
awplus# telnet host.example 100
```

Example (VRF-lite) To open a telnet session to a remote host `192.168.0.1` associated with VRF instance `red`, use the command:

```
awplus# telnet vrf red ip 192.168.0.1
```

Command changes Version 5.4.6-2.1: VRF-lite support added.

telnet server

Overview This command enables the telnet server on the specified TCP port. If the server is already enabled then it will be restarted on the new port. Changing the port number does not affect the port used by existing sessions.

Syntax

```
telnet server {<1-65535>|default}
```

Parameter	Description
<1-65535>	The TCP port to listen on.
`default`	Use the default TCP port number 23.

Mode Global Configuration

Example To enable the telnet server on TCP port 2323, use the following commands:

```
awplus# configure terminal
awplus(config)# telnet server 2323
```

Related Commands show telnet

terminal length

Overview Use the **terminal length** command to specify the number of rows of output that the device will display before pausing, for the currently-active terminal only.

Use the **terminal no length** command to remove the length specified by this command. The default length will apply unless you have changed the length for some or all lines by using the length (asyn) command.

Syntax

```
terminal length <length>
terminal no length [<length>]
```

Parameter	Description
<length>	<0-512> Number of rows that the device will display on the currently-active terminal before pausing.

Mode User Exec and Privileged Exec

Examples The following example sets the number of lines to 15:

```
awplus# terminal length 15
```

The following example removes terminal length set previously:

```
awplus# terminal no length
```

Related Commands terminal resize

length (asyn)

terminal resize

Overview Use this command to automatically adjust the number of rows of output on the console, which the device will display before pausing, to the number of rows configured on the user's terminal.

Syntax

```
terminal resize
```

Mode User Exec and Privileged Exec

Usage When the user's terminal size is changed, then a remote session via SSH or TELNET adjusts the terminal size automatically. However, this cannot normally be done automatically for a serial or console port. This command automatically adjusts the terminal size for a serial or console port.

Examples The following example automatically adjusts the number of rows shown on the console:

```
awplus# terminal resize
```

Related Commands length (asyn)

terminal length

username

Overview This command creates or modifies a user to assign a privilege level and a password.

NOTE: *The default username privilege level of 1 is not shown in running-config output. Any username privilege level that has been modified from the default is shown.*

Syntax

```
username <name> privilege <1-15> [password [8] <password>]
username <name> password [8] <password>
no username <name>
```

Parameter	Description	
<name>	The login name for the user. Do not use punctuation marks such as single quotes (‘ ‘), double quotes (“ “), or colons (:) with the user login name.	
`privilege`	The user’s privilege level. Use the privilege levels to set the access rights for each user.	
	<1-15>	A privilege level: either 1-14 (limited access) or 15 (full access). A user with privilege level 1-14 can only access higher privilege levels if an enable password has been configured for the level the user tries to access and the user enters that password. A user at privilege level 1 can access the majority of show commands. A user at privilege level 7 can access the majority of show commands including platform show commands. Privilege Level 15 (to access the Privileged Exec command mode) is required to access configuration commands as well as show commands in Privileged Exec.
`password`	A password that the user must enter when logging in.	
	`8`	Specifies that you are entering a password as a string that has already been encrypted, instead of entering a plain-text password. The running-config displays the new password as an encrypted string even if password encryption is turned off. Note that the user enters the plain-text version of the password when logging in.
	<password>	The user’s password. The password can be up to 23 characters in length and include characters from up to four categories. The password categories are: • uppercase letters: A to Z • lowercase letters: a to z • digits: 0 to 9 • special symbols: all printable ASCII characters not included in the previous three categories. The question mark ? cannot be used as it is reserved for help functionality.

Mode Global Configuration

Default The privilege level is 1 by default. Note the default is not shown in running-config output.

Usage

An intermediate CLI security level (privilege level 7 to privilege level 14) allows a CLI user access to the majority of show commands, including the platform show commands that are available at privilege level 1 to privilege level 6. Note that some show commands, such as **show running-configuration** and **show startup-configuration**, are only available at privilege level 15.

Examples

To create the user "bob" with a privilege level of 15, for all show commands including show running-configuration and show startup-configuration and to access configuration commands in Privileged Exec command mode, and the password "bobs_secret", use the commands:

```
awplus# configure terminal
awplus(config)# username bob privilege 15 password bobs_secret
```

To create a user "junior_admin" with a privilege level of 7, which will have intermediate CLI security level access for most show commands, and the password "show_only", use the commands:

```
awplus# configure terminal
awplus(config)# username junior_admin privilege 7 password
show_only
```

Related Commands

enable password

security-password minimum-categories

security-password minimum-length

4 GUI Commands

Introduction

Overview This chapter provides an alphabetical reference of commands used to configure the GUI. For more information, see the "Getting Started with AlliedWare Plus" Feature Overview and Configuration Guide

Command List

- "atmf topology-gui enable" on page 202
- "http secure-port" on page 203
- "log event-host" on page 204
- "service http" on page 205
- "show http" on page 206
- "update webgui now" on page 207

atmf topology-gui enable

Overview Use this command to enable the operation of Vista Manager EX on the Master device.

Vista Manager EX delivers state-of-the-art monitoring and management for your Autonomous Management Framework™ (AMF) network, by automatically creating a complete topology map of switches, firewalls and wireless access points (APs). An expanded view includes third-party devices such as security cameras.

Use the **no** variant of this command to disable operation of Vista Manager EX.

Syntax

```
atmf topology-gui enable
no atmf topology-gui enable
```

Default Disabled by default on AMF Master and member nodes. Enabled by default on Controllers.

Mode Global Configuration mode

Usage To use Vista Manager EX, you must also enable the HTTP service on all AMF nodes, including all AMF masters and controllers. The HTTP service is enabled by default on AlliedWare Plus switches and disabled by default on AR-Series firewalls. To enable it, use the commands:

```
Node1# configure terminal
Node1(config)# service http
```

On one master in each AMF area in your network, you also need to configure the master to send event notifications to Vista Manager EX. To do this, use the commands:

```
Node1# configure terminal
Node1(config)# log event-host <ip-address> atmf-topology-event
```

Example To enable Vista Manager EX on Node1, use the following commands:

```
Node1# configure terminal
Node1(config)# atmf topology-gui enable
```

To disable Vista Manager EX on Node1, use the following commands:

```
Node1# configure terminal
Node1(config)# no atmf topology-gui enable
```

Related Commands

atmf enable

log event-host

service http

http secure-port

Overview Use this command to change the HTTPS port used to access the Firewall GUI.

Use the **no** variant of this command to return to using the default port, which is 443.

Syntax

```
http secure-port <1-65535>
no http secure-port
```

Parameter	Description
<1-65535>	The HTTPS port number

Default This command is disabled by default and port 443 is used for accessing the GUI.

Mode Global Configuration

Usage Note that any device on which a non-default secure port is set will have limited capabilities when accessed via Vista Manager. Additionally, all external API requests will need to be directed to the configured port, instead of the default port 443.

Example To set the port to 8443, use the commands:

```
awplus# configure terminal
awplus(config)# http secure-port 8443
```

To return to using the default port of 443, use the commands:

```
awplus# configure terminal
awplus(config)# no http secure-port
```

Related Commands service http

show http

Command changes Version 5.4.7-1.1: command added

log event-host

Overview Use this command to set up an external host to log AMF topology events through Vista Manager. This command is run on the Master device.

Use the **no** variant of this command to disable log events through Vista Manager.

Syntax

```
log event-host [<ipv4-addr>|<ipv6-addr>] atmf-topology-event
no log event-host [<ipv4-addr>|<ipv6-addr>] atmf-topology-event
```

Parameter	Description
<ipv4-addr>	ipv4 address of the event host
<ipv6-addr>	ipv6 address of the event host

Default Log events are disabled by default.

Mode Global Configuration

Usage Event hosts are set so syslog sends the messages out as they come.

NOTE: *There is a difference between log event and log host messages:*

- Log event messages are sent out as they come by syslog
- Log host messages are set to wait for a number of messages (20) to send them out together for traffic optimization.

Example To enable Node 1 to log event messages from host IP address 192.0.2.31, use the following commands:

```
Node1# configure terminal
Node1(config)# log event-host 192.0.2.31 atmf-topology-event
```

To disable Node 1 to log event messages from host IP address 192.0.2.31, use the following commands:

```
Node1# configure terminal
Node1(config)# no log event-host 192.0.2.31 atmf-topology-event
```

Related Commands atmf topology-gui enable

service http

Overview Use this command to enable the HTTP (Hypertext Transfer Protocol) service.

This service is required to support Vista Manager EX™ and the Firewall GUI.

Use the **no** variant of this command to disable the HTTP feature.

Syntax

```
service http
no service http
```

Default Disabled

Mode Global Configuration

Example To enable the HTTP service, use the following commands:

```
awplus# configure terminal
awplus(config)# service http
```

To disable the HTTP service, use the following commands:

```
awplus# configure terminal
awplus(config)# no service http
```

Validation Commands show running-config

show http

Overview This command shows the HTTP server settings.

Syntax

```
show http
```

Mode User Exec and Privileged Exec

Example To show the HTTP server settings, use the command:

```
awplus# show http
```

Output Figure 4-1: Example output from the **show http** command

```
awplus#show http
HTTP Server Configuration
-----------------------------------------------------------
HTTP server                    : Enabled
Port                           : 80
Web GUI Information
-----------------------------------------------------------
GUI file in use                : webgui
GUI version:                   : 3.1
```

Related Commands

clear line vty

service http

update webgui now

Overview Use this command to check whether you have the latest version of the device's GUI and update it if a newer version is available.

Syntax

```
update webgui now
```

Mode Privileged Exec

Usage This command applies since software version 5.4.6-1.1. Prior to 5.4.6-1.1, users used the **copy** command to copy GUI files onto the AR-series firewall instead. If you did that, you need to delete all GUI files from Flash memory before you run the "update webgui now" command. To delete all GUI files, use the command:

```
awplus#del *gui_*.tar.gz
```

Examples To check for GUI updates, use the following command:

```
awplus#update webgui now
```

Related Commands show resource

5 Update Manager Commands

Introduction

This chapter provides an alphabetical reference of commands used to update a resource. For more information, see the Update Manager Feature Overview and Configuration_Guide.

Command List

- "show resource" on page 209
- "update webgui now" on page 210

show resource

Overview Use this command to show information about the resources of features that have been enabled.

Syntax `show resource [<resource_name>]`

Parameter	Description
<resource_name>	Specific resource to show

Mode Privileged Exec

Examples To show information about the resources of features that have been enabled, use the following command:

```
awplus#show resource
```

Output Figure 5-1: Example output for the **show resource** command

Table 5-1:

```
awplus#show resource
-------------------------------------------------------------------------
Resource Name    Status      Version    Interval   Last Download
                                                   Next Download Check
-------------------------------------------------------------------------
iprep_et_rules   Checking    1.1         4          Wed Dec 31 23:59:00 2013
                                        hours      Thu Jan 1 01:00:00 2014
```

The parameters in the example output are explained in the following table.

Parameter	Description
Resource Name	Name of the updatable resource
Status	Resource status. There are five types of status: Sleeping, Checking, Starting, Downloading, Stopping.
Version	Current version of the resource
Interval	Configured update check interval for the resource
Last Download	Time stamp of last resource downloaded
Next Download Check	Time stamp of next download check for the resource

Related Commands update webgui now

update webgui now

Overview Use this command to check whether you have the latest version of the device's GUI and update it if a newer version is available.

Syntax

```
update webgui now
```

Mode Privileged Exec

Usage This command applies since software version 5.4.6-1.1. Prior to 5.4.6-1.1, users used the **copy** command to copy GUI files onto the AR-series firewall instead. If you did that, you need to delete all GUI files from Flash memory before you run the "update webgui now" command. To delete all GUI files, use the command:

```
awplus#del *gui_*.tar.gz
```

Examples To check for GUI updates, use the following command:

```
awplus#update webgui now
```

Related Commands show resource

6 System Configuration and Monitoring Commands

Introduction

Overview This chapter provides an alphabetical reference of commands for configuring and monitoring the system.

Command List

- "banner exec" on page 213
- "banner login (system)" on page 215
- "banner motd" on page 217
- "clock set" on page 219
- "clock summer-time date" on page 220
- "clock summer-time recurring" on page 222
- "clock timezone" on page 224
- "hostname" on page 225
- "max-fib-routes" on page 227
- "max-static-routes" on page 229
- "no debug all" on page 230
- "reboot" on page 232
- "reload" on page 233
- "show clock" on page 234
- "show cpu" on page 236
- "show cpu history" on page 239
- "show debugging" on page 241
- "show interface memory" on page 242
- "show memory" on page 244
- "show memory allocations" on page 246

- "show memory history" on page 248
- "show memory pools" on page 249
- "show memory shared" on page 250
- "show process" on page 251
- "show reboot history" on page 253
- "show router-id" on page 254
- "show system" on page 255
- "show system environment" on page 256
- "show system interrupts" on page 257
- "show system mac" on page 258
- "show system pci device" on page 259
- "show system pci tree" on page 260
- "show system serialnumber" on page 261
- "show tech-support" on page 262
- "speed (asyn)" on page 264
- "terminal monitor" on page 266
- "undebug all" on page 267

banner exec

Overview This command configures the User Exec mode banner that is displayed on the console after you login. The **banner exec default** command restores the User Exec banner to the default banner. Use the **no banner exec** command to disable the User Exec banner and remove the default User Exec banner.

Syntax

```
banner exec <banner-text>
banner exec default
no banner exec
```

Default By default, the AlliedWare Plus™ version and build date is displayed at console login, such as:

```
AlliedWare Plus (TM) 5.4.7 01/03/17 12:00:00
```

Mode Global Configuration

Examples To configure a User Exec mode banner after login (in this example, to tell people to use the **enable** command to move to Privileged Exec mode), enter the following commands:

```
awplus#configure terminal
awplus(config)#banner exec Use enable to move to Priv Exec mode
awplus(config)#exit
awplus#exit

awplus login: manager
Password:

Use enable to move to Priv Exec mode

awplus>
```

To restore the default User Exec mode banner after login, enter the following commands:

```
awplus#configure terminal
awplus(config)#banner exec default
awplus(config)#exit
awplus#exit

awplus login: manager
Password:

AlliedWare Plus (TM) 5.4.7 01/03/17 12:00:00

awplus>
```

To remove the User Exec mode banner after login, enter the following commands:

```
awplus#configure terminal
awplus(config)#no banner exec
awplus(config)#exit
awplus#exit

awplus login: manager
Password:

awplus>
```

Related Commands

banner login (system)

banner motd

banner login (system)

Overview This command configures the login banner that is displayed on the console when you login. The login banner is displayed on all connected terminals. The login banner is displayed after the MOTD (Message-of-the-Day) banner and before the login username and password prompts.

Use the **no banner login** command to disable the login banner.

Syntax

```
banner login
no banner login
```

Default By default, no login banner is displayed at console login.

Mode Global Configuration

Examples To configure a login banner of "Authorised users only" to be displayed when you login, enter the following commands:

```
awplus#configure terminal
awplus(config)#banner login
Type CNTL/D to finish.

Authorised users only

awplus(config)#exit
awplus#exit

Authorised users only

awplus login: manager
Password:

AlliedWare Plus (TM) 5.4.7 01/03/17 12:00:00

awplus>
```

To remove the login banner, enter the following commands:

```
awplus#configure terminal
awplus(config)#no banner login
awplus(config)#exit
awplus#exit

awplus login: manager
Password:

AlliedWare Plus (TM) 5.4.7 01/03/17 12:00:00

awplus>
```

Related Commands

banner exec

banner motd

banner motd

Overview Use this command to create or edit the text MotD (Message-of-the-Day) banner displayed before login. The MotD banner is displayed on all connected terminals. The MotD banner is useful for sending messages that affect all network users, for example, any imminent system shutdowns.

Use the **no** variant of this command to delete the MotD banner.

Syntax

```
banner motd <motd-text>
no banner motd
```

Parameter	Description
<motd-text>	The text to appear in the Message of the Day banner.

Default By default, the device displays the AlliedWare Plus™ OS version and build date when you login.

Mode Global Configuration

Examples To configure a MotD banner of "System shutdown at 6pm today" to be displayed when you log in, enter the following commands:

```
awplus>enable
awplus#configure terminal
Enter configuration commands, one per line.  End with CNTL/Z.
awplus(config)#banner motd System shutdown at 6pm today
awplus(config)#exit
awplus#exit

System shutdown at 6pm today
awplus login: manager
Password:

AlliedWare Plus (TM) 5.4.7 01/03/17 12:00:00

awplus>
```

To delete the login banner, enter the following commands:

```
awplus>enable
awplus#configure terminal
Enter configuration commands, one per line.  End with CNTL/Z.
awplus(config)#no banner motd
awplus(config)#exit
awplus#exit

awplus login: manager
Password:

AlliedWare Plus (TM) 5.4.7 01/03/17 12:00:00

awplus>
```

Related Commands

banner exec

banner login (system)

clock set

Overview This command sets the time and date for the system clock.

Syntax

```
clock set <hh:mm:ss> <day> <month> <year>
```

Parameter	Description
<hh:mm:ss>	Local time in 24-hour format
<day>	Day of the current month, from 1 to 31
<month>	The first three letters of the current month
<year>	Current year, from 2000 to 2035

Mode Privileged Exec

Usage Configure the timezone before setting the local time. Otherwise, when you change the timezone, the device applies the new offset to the local time.

NOTE: *If Network Time Protocol (NTP) is enabled, then you cannot change the time or date using this command. NTP maintains the clock automatically using an external time source. If you wish to manually alter the time or date, you must first disable NTP.*

Example To set the time and date on your system to 2pm on the 2nd of October 2016, use the command:

```
awplus# clock set 14:00:00 2 oct 2016
```

Related Commands clock timezone

clock summer-time date

Overview This command defines the start and end of summertime for a specific year only, and specifies summertime's offset value to Standard Time for that year.

The **no** variant of this command removes the device's summertime setting. This clears both specific summertime dates and recurring dates (set with the clock summer-time recurring command).

By default, the device has no summertime definitions set.

Syntax

```
clock summer-time <timezone-name> date <start-day>
<start-month> <start-year> <start-time> <end-day> <end-month>
<end-year> <end-time> <1-180>
```

```
no clock summer-time
```

Parameter	Description
<timezone-name>	A description of the summertime zone, up to 6 characters long.
`date`	Specifies that this is a date-based summertime setting for just the specified year.
<start-day>	Day that the summertime starts, from 1 to 31.
<start-month>	First three letters of the name of the month that the summertime starts.
<start-year>	Year that summertime starts, from 2000 to 2035.
<start-time>	Time of the day that summertime starts, in the 24-hour time format HH:MM.
<end-day>	Day that summertime ends, from 1 to 31.
<end-month>	First three letters of the name of the month that the summertime ends.
<end-year>	Year that summertime ends, from 2000 to 2035.
<end-time>	Time of the day that summertime ends, in the 24-hour time format HH:MM.
<1-180>	The offset in minutes.

Mode Global Configuration

Examples To set a summertime definition for New Zealand using NZST (UTC+12:00) as the standard time, and NZDT (UTC+13:00) as summertime, with the summertime set to begin on the 25th of September 2016 and end on the 2nd of April 2017:

```
awplus(config)# clock summer-time NZDT date 25 sep 2:00 2016 2
apr 2:00 2017 60
```

To remove any summertime settings on the system, use the command:

```
awplus(config)# no clock summer-time
```

Related Commands

clock summer-time recurring

clock timezone

clock summer-time recurring

Overview This command defines the start and end of summertime for every year, and specifies summertime's offset value to Standard Time.

The **no** variant of this command removes the device's summertime setting. This clears both specific summertime dates (set with the clock summer-time date command) and recurring dates.

By default, the device has no summertime definitions set.

Syntax

```
clock summer-time <timezone-name> recurring <start-week>
<start-day> <start-month> <start-time> <end-week> <end-day>
<end-month> <end-time> <1-180>

no clock summer-time
```

Parameter	Description
<timezone-name>	A description of the summertime zone, up to 6 characters long.
`recurring`	Specifies that this summertime setting applies every year from now on.
<start-week>	Week of the month when summertime starts, in the range 1-5. The value 5 indicates the last week that has the specified day in it for the specified month. For example, to start summertime on the last Sunday of the month, enter 5 for <*start-week*> and sun for <*start-day*>.
<start-day>	Day of the week when summertime starts. Valid values are mon, tue, wed, thu, fri, sat or sun.
<start-month>	First three letters of the name of the month that summertime starts.
<start-time>	Time of the day that summertime starts, in the 24-hour time format HH:MM.
<end-week>	Week of the month when summertime ends, in the range 1-5. The value 5 indicates the last week that has the specified day in it for the specified month. For example, to end summertime on the last Sunday of the month, enter 5 for <*end-week*> and sun for <*end-day*>.
<end-day>	Day of the week when summertime ends. Valid values are mon, tue, wed, thu, fri, sat or sun.
<end-month>	First three letters of the name of the month that summertime ends.
<end-time>	Time of the day that summertime ends, in the 24-hour time format HH:MM.
<1-180>	The offset in minutes.

Mode Global Configuration

Examples To set a summertime definition for New Zealand using NZST (UTC+12:00) as the standard time, and NZDT (UTC+13:00) as summertime, with summertime set to start on the last Sunday in September, and end on the 1st Sunday in April, use the command:

```
awplus(config)# clock summer-time NZDT recurring 5 sun sep 2:00
1 sun apr 2:00 60
```

To remove any summertime settings on the system, use the command:

```
awplus(config)# no clock summer-time
```

Related Commands clock summer-time date

clock timezone

clock timezone

Overview This command defines the device's clock timezone. The timezone is set as a offset to the UTC.

The **no** variant of this command resets the system time to UTC.

By default, the system time is set to UTC.

Syntax

```
clock timezone <timezone-name> {minus|plus}
[<0-13>|<0-12>:<00-59>]
no clock timezone
```

Parameter	Description
<timezone-name>	A description of the timezone, up to 6 characters long.
minusorplus	The direction of offset from UTC. The **minus** option indicates that the timezone is behind UTC. The **plus** option indicates that the timezone is ahead of UTC.
<0-13>	The offset in hours or from UTC.
<0-12>:<00-59>	The offset in hours or from UTC.

Mode Global Configuration

Usage Configure the timezone before setting the local time. Otherwise, when you change the timezone, the device applies the new offset to the local time.

Examples To set the timezone to New Zealand Standard Time with an offset from UTC of +12 hours, use the command:

```
awplus(config)# clock timezone NZST plus 12
```

To set the timezone to Indian Standard Time with an offset from UTC of +5:30 hours, use the command:

```
awplus(config)# clock timezone IST plus 5:30
```

To set the timezone back to UTC with no offsets, use the command:

```
awplus(config)# no clock timezone
```

Related Commands clock set

clock summer-time date

clock summer-time recurring

hostname

Overview This command sets the name applied to the device as shown at the prompt. The hostname is:

- displayed in the output of the show system command
- displayed in the CLI prompt so you know which device you are configuring
- stored in the MIB object sysName

Use the **no** variant of this command to revert the hostname setting to its default. For devices that are not part of an AMF network, the default is "awplus".

Syntax

```
hostname <hostname>
no hostname [<hostname>]
```

Parameter	Description
<hostname>	Specifies the name given to a specific device.

Default `awplus`

Mode Global Configuration

Usage Within an AMF network, any device without a user-defined hostname will automatically be assigned a name based on its MAC address.

To efficiently manage your network using AMF, we strongly advise that you devise a naming convention for your network devices and apply an appropriate hostname to each device.

The name must also follow the rules for ARPANET host names. The name must start with a letter, end with a letter or digit, and use only letters, digits, and hyphens. Refer to RFC 1035.

Example To set the system name to `HQ-Sales`, use the command:

```
awplus# configure terminal
awplus(config)# hostname HQ-Sales
```

This changes the prompt to:

```
HQ-Sales(config)#
```

To revert to the default hostname `awplus`, use the command:

```
HQ-Sales(config)# no hostname
```

This changes the prompt to:

```
awplus(config)#
```

NOTE: *When AMF is configured, running the* ***no hostname*** *command will apply a hostname that is based on the MAC address of the device node, for example,* ***node_0000_5e00_5301****.*

Related Commands show system

max-fib-routes

Overview This command enables you to control the maximum number of FIB routes configured. It operates by providing parameters that enable you to configure preset maximums and warning message thresholds.

NOTE: *When using VRF-lite, this command applies to the Global VRF instance; to set the max-fib-routes for a user-defined VRF instance use the max-fib-routes (VRF) command. For static routes use the max-static-routes command for the Global VRF instance and the max-static-routes (VRF) command for a user-defined VRF instance.*

Use the **no** variant of this command to set the maximum number of FIB routes to the default of 4294967294 FIB routes.

Syntax

```
max-fib-routes <1-4294967294> [<1-100>|warning-only]
no max-fib-routes
```

Parameter	Description
`max-fib-routes`	This is the maximum number of routes that can be stored in the device's Forwarding Information dataBase. In practice, other practical system limits would prevent this maximum being reached.
<1-4294967294>	The allowable configurable range for setting the maximum number of FIB-routes.
<1-100>	This parameter enables you to optionally apply a percentage value. This percentage will be based on the maximum number of FIB routes you have specified. This will cause a warning message to appear when your routes reach your specified percentage value. Routes can continue to be added until your configured maximum value is reached.
`warning-only`	This parameter enables you to optionally apply a warning message. If you set this option a warning message will appear if your maximum configured value is reached. Routes can continue to be added until your device reaches either the maximum capacity value of 4294967294, or a practical system limit.

Default The default number of FIB routes is the maximum number of FIB routes (4294967294).

Mode Global Configuration

Examples To set the maximum number of dynamic routes to 2000 and warning threshold of 75%, use the following commands:

```
awplus# config terminal
awplus(config)# max-fib-routes 2000 75
```

Related Commands max-fib-routes (VRF)

max-static-routes

Overview Use this command to set the maximum number of static routes, excluding FIB (Forwarding Information Base) routes.

NOTE: *For FIB routes use the max-fib-routes command.*

Use the **no** variant of this command to set the maximum number of static routes to the default of 1024 static routes.

Syntax

```
max-static-routes <1-1024>
no max-static-routes
```

Default The default number of static routes is the maximum number of static routes (1024).

Mode Global Configuration

Example To reset the maximum number of static routes to the default maximum, use the command:

```
awplus# configure terminal
awplus(config)# no max-static-routes
```

NOTE: *Static routes are applied before adding routes to the RIB (Routing Information Base). Therefore, rejected static routes will not appear in the running config.*

Related Commands max-fib-routes

no debug all

Overview This command disables the debugging facility for all features on your device. This stops the device from generating any diagnostic debugging messages.

The debugging facility is disabled by default.

Syntax

```
no debug all [ipv6|nsm|ospf|pim sparse-mode|rip|vrrp]
```

Parameter	Description
`bgp`	Turns off all debugging for BGP (Border Gateway Protocol).
`ipv6`	Turns off all debugging for IPv6 (Internet Protocol version 6).
`nsm`	Turns off all debugging for the NSM (Network Services Module).
`ospf`	Turns off all debugging for OSPF (Open Shortest Path First).
`pim sparse-mode`	Turns off all debugging for PIM (Protocol Independent Multicast) Sparse Mode.
`rip`	Turns off all debugging for RIP (Routing Information Protocol).
`vrrp`	Turns off all debugging for VRRP (Virtual Router Redundancy Protocol).

Mode Global Configuration and Privileged Exec

Example To disable debugging for all features, use the command:

```
awplus# no debug all
```

To disable all bgp debugging, use the command:

```
awplus# no debug all bgp
```

To disable all IPv6 debugging, use the command:

```
awplus# no debug all ipv6
```

To disable all NSM debugging, use the command:

```
awplus# no debug all nsm
```

To disable all OSPF debugging, use the command:

```
awplus# no debug all ospf
```

To disable all PIM Sparse Mode debugging, use the command:

```
awplus# no debug all pim sparse-mode
```

To disable all RIP debugging, use the command:

```
awplus# no debug all rip
```

To disable all VRRP debugging, use the command:

```
awplus# no debug all vrrp
```

Related Commands undebug all

Command changes Version 5.4.7-1.1: PIM Sparse Mode parameter added

Version 5.4.7-1.1: RIP parameter added

reboot

Overview This command halts the device and performs a cold restart (also known as reload). It displays a confirmation request before restarting.

Syntax

```
reboot
reload
```

Mode Privileged Exec

Usage The **reboot** and **reload** commands perform the same action.

Examples To restart the device, use the command:

```
awplus# reboot
reboot system? (y/n): y
```

reload

Overview This command performs the same function as the reboot command.

show clock

Overview This command displays the system's current configured local time and date. It also displays other clock related information such as timezone and summertime configuration.

Syntax

```
show clock
```

Mode User Exec and Privileged Exec

Example To display the system's current local time, use the command:

```
awplus# show clock
```

Output Figure 6-1: Example output from the **show clock** command for a device using New Zealand time

```
Local Time: Mon,  17 Oct 2016 13:56:06 +1200
UTC Time:   Mon,  17 Oct 2016 01:56:06 +0000
Timezone: NZST
Timezone Offset: +12:00
Summer time zone: NZDT
Summer time starts: Last Sunday in September at 02:00:00
Summer time ends: First Sunday in April at 02:00:00
Summer time offset: 60 mins
Summer time recurring: Yes
```

Table 1: Parameters in the output of the **show clock** command

Parameter	Description
Local Time	Current local time.
UTC Time	Current UTC time.
Timezone	The current configured timezone name.
Timezone Offset	Number of hours offset to UTC.
Summer time zone	The current configured summertime zone name.
Summer time starts	Date and time set as the start of summer time.
Summer time ends	Date and time set as the end of summer time.
Summer time offset	Number of minutes that summer time is offset from the system's timezone.
Summer time recurring	Whether the device will apply the summer time settings every year or only once.

Related Commands

clock set

clock summer-time date

clock summer-time recurring

clock timezone

show cpu

Overview This command displays a list of running processes with their CPU utilization.

For information on filtering and saving command output, see the "Getting Started with AlliedWare Plus" Feature Overview and Configuration Guide.

Syntax

```
show cpu [sort {thrds|pri|sleep|runtime}]
```

Parameter	Description	
`sort`	Changes the sorting order using the following fields. If you do not specify a field, then the list is sorted by percentage CPU utilization.	
	`thrds`	Sort by the number of threads.
	`pri`	Sort by the process priority.
	`sleep`	Sort by the average time sleeping.
	`runtime`	Sort by the runtime of the process.

Mode User Exec and Privileged Exec

Examples To show the CPU utilization of current processes, sorting them by the number of threads the processes are using, use the command:

```
awplus# show cpu sort thrds
```

Output Figure 6-2: Example output from **show cpu**

```
awplus#show cpu
CPU averages:
 1 second: 0%, 20 seconds: 0%, 60 seconds: 0%
System load averages:
 1 minute: 0.16, 5 minutes: 0.13, 15 minutes: 0.13
Current CPU load:
 userspace: 2%, kernel: 6%, interrupts: 0% iowaits: 0%

user processes
==============
  pid name            thrds  cpu%   pri state sleep% runtime
  763 hostd               1   2.9    20   run     0   128
  803 diag_monitor        1   0.4    20 sleep     0  3292
  768 hsl                14   0.4    20 sleep     0  3912
    1 init                1   0.0    20 sleep     0   686
  478 rtccludge           1   0.0    20 sleep     0     9
  504 portmap             1   0.0    20 sleep     0     2
17555 sh                  1   0.0    20 sleep     0     1
17556 console_log_ale     1   0.0    20 sleep     0     1
  515 syslog-ng           1   0.0    20 sleep     0   153
  521 dbus-daemon         1   0.0    20 sleep     0     2
  532 automount           1   0.0    20 sleep     0   453
  571 appmond             1   0.0    20 sleep     0    41
  587 crond               1   0.0    20 sleep     0    17
  589 openhpid            9   0.0    20 sleep     0   284
  609 inetd               1   0.0    20 sleep     0     2
  761 nsm                 1   0.0    20 sleep     0   260
  765 imi                 1   0.0    20 sleep     0   616
  799 almond              1   0.0    20 sleep     0    52
  805 cntrd               1   0.0    20 sleep     0    45
  807 poehw               3   0.0    20 sleep     0   207
  820 authd               1   0.0    20 sleep     0    76
  ...

kernel threads
==============
  pid name             cpu%   pri state sleep% runtime
  144 aio               0.0     0 sleep     0     0
   95 bdi-default       0.0    20 sleep     0     0
  149 crypto            0.0     0 sleep     0     0
  474 flush-31:4        0.0    20 sleep     0     1
  143 fsnotify_mark     0.0    20 sleep     0     0
  426 jffs2_gcd_mtd0    0.0    30 sleep     0   353
   96 kblockd           0.0     0 sleep     0     0
   12 khelper           0.0     0 sleep     0     0
  105 khubd             0.0    20 sleep     0     0
    3 ksoftirqd/0       0.0    20 sleep     0     0
  142 kswapd0           0.0    20 sleep     0     0
    2 kthreadd          0.0    20 sleep     0     0
    4 kworker/0:0       0.0    20 sleep     0    29
    6 linkwatch         0.0     0 sleep     0     0
  466 loop0             0.0     0 sleep     0   801
    7 migration/0       0.0  -100 sleep     0     0
  244 mtdblock0         0.0    20 sleep     0     5
   93 sync_supers       0.0    20 sleep     0     1
```

Table 2: Parameters in the output of the **show cpu** command

Parameter	Description
`CPU averages`	Average CPU utilization for the periods stated.
`System load averages`	The average number of processes waiting for CPU time for the periods stated.
`Current CPU load`	Current CPU utilization specified by load types.
`pid`	Identifier number of the process.
`name`	A shortened name for the process
`thrds`	Number of threads in the process.
`cpu%`	Percentage of CPU utilization that this process is consuming.
`pri`	Process priority state.
`state`	Process state; one of “run”, “sleep”, “zombie”, and “dead”.
`sleep%`	Percentage of time that the process is in the sleep state.
`runtime`	The time that the process has been running for, measured in jiffies. A jiffy is the duration of one tick of the system timer interrupt.

Related Commands

show memory

show memory allocations

show memory history

show memory pools

show process

show cpu history

Overview This command prints a graph showing the historical CPU utilization.

For information on filtering and saving command output, see the "Getting Started with AlliedWare Plus" Feature Overview and Configuration Guide.

Syntax

```
show cpu history
```

Mode User Exec and Privileged Exec

Usage This command's output displays three graphs of the percentage CPU utilization:

- per second for the last minute, then
- per minute for the last hour, then
- per 30 minutes for the last 30 hours.

Examples To display a graph showing the historical CPU utilization of the device, use the command:

```
awplus# show cpu history
```

Output Figure 6-3: Example output from the **show cpu history** command

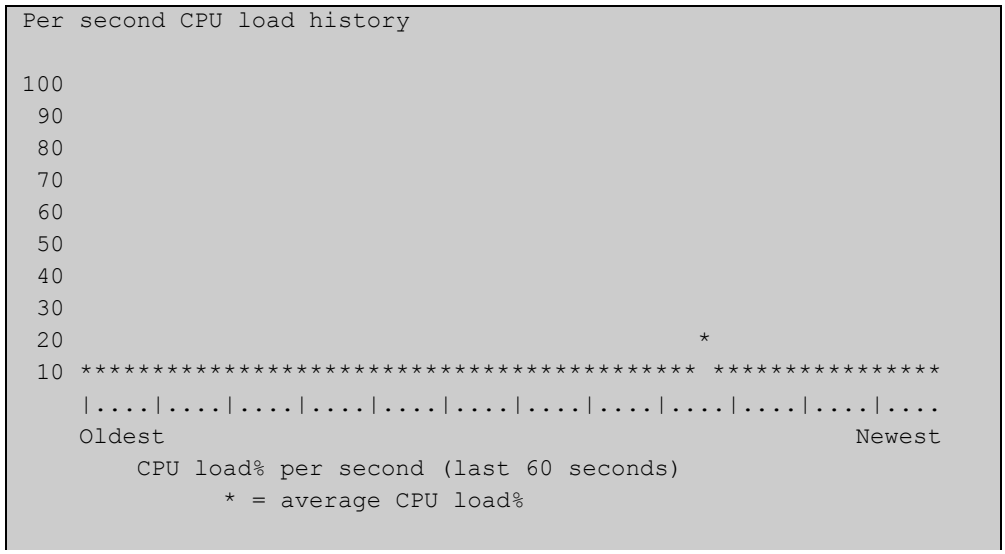

```
Per second CPU load history

100
 90
 80
 70
 60
 50
 40
 30
 20                                          *
 10 ******************************************* ***************
    |....|....|....|....|....|....|....|....|....|....|....|....
    Oldest                                                 Newest
        CPU load% per second (last 60 seconds)
              * = average CPU load%
```

```
Per minute CPU load history

100
 90
 80
 70
 60                                                  +
 50
 40
 30
 20 ++ +++++++++ +++++++ ++++ + ++++++ ++++ +++ +++++ +++++++++
 10 ************************************************************
    |....|....|....|....|....|....|....|....|....|....|....|....
    Oldest                                                 Newest
        CPU load% per minute (last 60 minutes)
              * = average CPU load%, + = maximum

Per (30) minute CPU load history

100
 90
 80
 70                                                        +
 60
 50
 40
 30
 20
 10                                                       ***
    |....|....|....|....|....|....|....|....|....|....|....|....
    Oldest                                                 Newest
        CPU load% per 30 minutes (last 60 values / 30 hours)
              * = average, - = minimum, + = maximum
```

Related Commands

show memory

show memory allocations

show memory pools

show process

show debugging

Overview This command displays information for all debugging options.

For information on filtering and saving command output, see the "Getting Started with AlliedWare Plus" Feature Overview and Configuration Guide.

Syntax

```
show debugging
```

Default This command runs all the **show debugging** commands in alphabetical order.

Mode User Exec and Privileged Exec

Usage This command displays all debugging information, similar to the way the show tech-support command displays all show output for use by Allied Telesis authorized service personnel only.

Example To display all debugging information, use the command:

```
awplus# show debugging
```

Output Figure 6-4: Example output from the **show debugging** command

```
awplus#show debugging
AAA debugging status:
  Authentication debugging is off
  Authorization debugging is off
  Accounting debugging is off
Antivirus Debugging Status: off
% Error: ATMF is not configured.
BGP debugging status:
  BGP debugging is off
  BGP nht debugging is off
  BGP nsm debugging is off
  BGP events debugging is off
  BGP keepalives debugging is off
  BGP updates debugging is off
  BGP fsm debugging is off
  BGP filter debugging is off
  BGP Route Flap Dampening debugging is off

Firewall Debugging Status: off
Traffic shaping debugging status: off
IGMP Debugging status:
  IGMP Decoder debugging is off
  IGMP Encoder debugging is off
  IGMP Events debugging is off
  IGMP FSM debugging is off
  IGMP Tree-Info-Base (TIB) debugging is off
DNS Relay debugging status:
  debugging is off
IP packet debugging status:
OSPFv3 debugging status:
...
```

show interface memory

Overview This command displays the shared memory used by either all interfaces, or the specified interface or interfaces. The output is useful for diagnostic purposes by Allied Telesis authorized service personnel.

For information on filtering and saving command output, see the "Getting Started with AlliedWare Plus" Feature Overview and Configuration Guide.

Syntax

```
show interface memory
show interface <port-list> memory
```

Parameter	Description
<port-list>	Display information about only the specified port or ports. The port list can be: • an Eth (e.g. eth1) or switch port (e.g. port1.0.4), a static channel group (e.g. sa2) or a dynamic (LACP) channel group (e.g. po2) • a continuous range of ports separated by a hyphen (e.g. port1.0.1-1.0.4, or sa1-2, or po1-2) • a comma-separated list of ports and port ranges (e.g. port1.0.1,port1.0.4-1.0.6). Do not mix port types in the same list.

Mode User Exec and Privileged Exec

Example To display the shared memory used by all interfaces, use the command:

```
awplus# show interface memory
```

To display the shared memory used by port1.0.1 and port1.0.5 to port1.0.6, use the command:

```
awplus# show interface port1.0.1,port1.0.5-1.0.6 memory
```

Output Figure 6-5: Example output from the **show interface memory** command

```
awplus#show interface memory
Vlan blocking state shared memory usage
---------------------------------------------
Interface    shmid        Bytes Used     nattch     Status
port1.0.1    294921       512            1
port1.0.2    491535       512            1
port1.0.3    458766       512            1
port1.0.4    524304       512            1
port1.0.5    425997       512            1
port1.0.6    589842       512            1
port1.0.7    557073       512            1
port1.0.8    622611       512            1
eth2         327690       512            1
eth1         393228       512            1
lo           360459       512            1
```

Figure 6-6: Example output from **show interface <port-list> memory** for a list of interfaces

```
awplus#show interface port1.0.1,port1.0.5-1.0.6 memory
Vlan blocking state shared memory usage
---------------------------------------------
Interface    shmid        Bytes Used     nattch     Status
port1.0.1    294921       512            1
port1.0.5    425997       512            1
port1.0.6    589842       512            1
```

Related Commands

show interface brief

show interface status

show interface switchport

show memory

Overview This command displays the memory used by each process that is currently running

For information on filtering and saving command output, see the "Getting Started with AlliedWare Plus" Feature Overview and Configuration Guide.

Syntax

```
show memory [sort {size|peak|stk}]
```

Parameter	Description	
`sort`	Changes the sorting order for the list of processes. If you do not specify this, then the list is sorted by percentage memory utilization.	
	`size`	Sort by the amount of memory the process is currently using.
	`peak`	Sort by the amount of memory the process is currently using.
	`stk`	Sort by the stack size of the process.

Mode User Exec and Privileged Exec

Example To display the memory used by the current running processes, use the command:

```
awplus# show memory
```

Output Figure 6-7: Example output from **show memory**

```
awplus#show memory

RAM total: 824680 kB; free: 635032 kB; buffers: 20272 kB

user processes
==============
  pid name             mem%  size(kB)  peak(kB)  data(kB)   stk(kB)  virt(kB)
 1443 squid             1.9     16408    299768     23568       264    299768
 1441 squid             1.9     16416    299776     23568       272    299776
 1440 squid             1.9     16416    299776     23568       272    299776
 1439 squid             1.9     16416    299776     23568       272    299776
 1438 squid             1.9     16152    298928     23568       264    298864
 1226 imi               1.3     10968     23104      2760       160     22912
 1228 hsl               1.2     10512    692944    608160       144    631856
 2156 imish             1.0      8856    158456     75904       160     94696
 1221 nsm               1.0      9008     21696      1968       152     21632
 1296 ospfd             0.8      6936     19144      1016       144     19080
 1293 bgpd              0.8      7264     19184      1168       152     19120
 1291 pimd              0.8      6600     20992      2944       144     20928
 1283 ripd              0.8      6640     18328       944       152     18256
...
```

Table 3: Parameters in the output of the **show memory** command

Parameter	Description
`RAM total`	Total amount of RAM memory free.
`free`	Available memory size.
`buffers`	Memory allocated kernel buffers.
`pid`	Identifier number for the process.
`name`	Short name used to describe the process.
`mem%`	Percentage of memory utilization the process is currently using.
`size`	Amount of memory currently used by the process.
`peak`	Greatest amount of memory ever used by the process.
`data`	Amount of memory used for data.
`stk`	The stack size.

Related Commands

show memory allocations

show memory history

show memory pools

show memory shared

show memory allocations

Overview This command displays the memory allocations used by processes.

For information on filtering and saving command output, see the "Getting Started with AlliedWare Plus" Feature Overview and Configuration Guide.

Syntax

```
show memory allocations [<process>]
```

Parameter	Description
<process>	Displays the memory allocation used by the specified process.

Mode User Exec and Privileged Exec

Example To display the memory allocations used by all processes on your device, use the command:

```
awplus# show memory allocations
```

Output Figure 6-8: Example output from the **show memory allocations** command

```
awplus#show memory allocations
Memory allocations for imi
----------------------------

Current 15093760 (peak 15093760)

Statically allocated memory:
 - binary/exe                :    1675264
 - libraries                 :    8916992
 - bss/global data           :    2985984
 - stack                     :     139264

Dynamically allocated memory (heap):
 - total allocated           :    1351680
   - in use                  :    1282440
   - non-mmapped             :    1351680
 - maximum total allocated   :    1351680
 - total free space          :      69240
   - releasable              :      68968
   - space in freed fastbins :         16

Context
           filename:line   allocated      freed
 +            lib.c:749          484
.
.
.
```

Related Commands

show memory

show memory history

show memory pools

show memory shared

show tech-support

show memory history

Overview This command prints a graph showing the historical memory usage.

For information on filtering and saving command output, see the "Getting Started with AlliedWare Plus" Feature Overview and Configuration Guide.

Syntax

```
show memory history
```

Mode User Exec and Privileged Exec

Usage This command's output displays three graphs of the percentage memory utilization:

- per second for the last minute, then
- per minute for the last hour, then
- per 30 minutes for the last 30 hours.

Examples To show a graph displaying the historical memory usage, use the command:

```
awplus# show memory history
```

Output Figure 6-9: Example output from the **show memory history** command

```
Per minute memory utilization history

100
 90
 80
 70
 60
 50
 40************************************************************
 30
 20
 10
    |....|....|....|....|....|....|....|....|....|....|....|....
    Oldest                                                 Newest
        Memory utilization% per minute (last 60 minutes)
              * = average memory utilisation%.
...
```

Related Commands

show memory allocations

show memory pools

show memory shared

show tech-support

show memory pools

Overview This command shows the memory pools used by processes.

For information on filtering and saving command output, see the "Getting Started with AlliedWare Plus" Feature Overview and Configuration Guide.

Syntax

```
show memory pools [<process>]
```

Parameter	Description
<process>	Displays the memory pools used by the specified process.

Mode User Exec and Privileged Exec

Example To shows the memory pools used by processes, use the command:

```
awplus# show memory pools
```

Output Figure 6-10: Example output from the **show memory pools** command

```
awplus#show memory pools
Memory pools for imi
----------------------

Current 15290368 (peak 15290368)

Statically allocated memory:
 - binary/exe                 :    1675264
 - libraries                  :    8916992
 - bss/global data            :    2985984
 - stack                      :     139264

Dynamically allocated memory (heap):
 - total allocated            :    1548288
   - in use                   :    1479816
   - non-mmapped              :    1548288
 - maximum total allocated    :    1548288
 - total free space           :      68472
   - releasable               :      68200
   - space in freed fastbins  :         16
.
.
.
```

Related Commands

show memory allocations

show memory history

show tech-support

show memory shared

Overview This command displays shared memory allocation information. The output is useful for diagnostic purposes by Allied Telesis authorized service personnel.

For information on filtering and saving command output, see the "Getting Started with AlliedWare Plus" Feature Overview and Configuration Guide.

Syntax

```
show memory shared
```

Mode User Exec and Privileged Exec

Example To display information about the shared memory allocation used on the device, use the command:

```
awplus# show memory shared
```

Output Figure 6-11: Example output from the **show memory shared** command

```
awplus#show memory shared
Shared Memory Status
--------------------------
Segment allocated  = 39
Pages allocated    = 39
Pages resident     = 11

Shared Memory Limits
--------------------------
Maximum number of segments          = 4096
Maximum segment size (kbytes)       = 32768
Maximum total shared memory (pages) = 2097152
Minimum segment size (bytes)        = 1
```

Related Commands

show memory allocations

show memory history

show memory

show process

Overview This command lists a summary of the current running processes.

For information on filtering and saving command output, see the "Getting Started with AlliedWare Plus" Feature Overview and Configuration Guide.

Syntax

```
show process [sort {cpu|mem}]
```

Parameter	Description	
sort	Changes the sorting order for the list of processes.	
	cpu	Sorts the list by the percentage of CPU utilization.
	mem	Sorts the list by the percentage of memory utilization.

Mode User Exec and Privileged Exec

Usage This command displays a snapshot of currently-running processes. If you want to see CPU or memory utilization history instead, use the commands show cpu history or show memory history.

Example To display a summary of the current running processes, use the command:

```
awplus# show process
```

Output Figure 6-12: Example output from the **show process** command

```
CPU averages:
 1 second: 8%, 20 seconds: 5%, 60 seconds: 5%
System load averages:
 1 minute: 0.04, 5 minutes: 0.08, 15 minutes: 0.12
Current CPU load:
 userspace: 9%, kernel: 9%, interrupts: 0% iowaits: 0%
RAM total: 514920 kB; free: 382600 kB; buffers: 16368 kB

user processes
==============
pid name          thrds  cpu%  mem%   pri  state  sleep%
962 pss             12     0     6    25  sleep       5
1   init             1     0     0    25  sleep       0
797 syslog-ng        1     0     0    16  sleep      88
...
kernel threads
==============
pid name          cpu%  pri  state  sleep%
71  aio/0         0     20   sleep  0
3   events/0      0     10   sleep  98
...
```

Table 4: Parameters in the output from the **show process** command

Parameter	Description
`CPU averages`	Average CPU utilization for the periods stated.
`System load averages`	The average number of processes waiting for CPU time for the periods stated.
`Current CPU load`	Current CPU utilization specified by load types
`RAM total`	Total memory size.
`free`	Available memory.
`buffers`	Memory allocated to kernel buffers.
`pid`	Identifier for the process.
`name`	Short name to describe the process.
`thrds`	Number of threads in the process.
`cpu%`	Percentage of CPU utilization that this process is consuming.
`mem%`	Percentage of memory utilization that this process is consuming.
`pri`	Process priority.
`state`	Process state; one of “run”, “sleep”, “stop”, “zombie”, or “dead”.
`sleep%`	Percentage of time the process is in the sleep state.

Related Commands

show cpu

show cpu history

show reboot history

Overview Use this command to display the device's reboot history.

Syntax

```
show reboot history
```

Mode User Exec and Privileged Exec

Example To show the reboot history, use the command:

```
awplus# show reboot history
```

Output Figure 6-13: Example output from the **show reboot history** command

```
awplus#show reboot history

<date>     <time>    <type>      <description>
-----------------------------------------------
2016-10-10 01:42:04  Expected    User Request
2016-10-10 01:35:31  Expected    User Request
2016-10-10 01:16:25  Unexpected  Rebooting due to critical process (network/nsm)
failure!
2016-10-10 01:11:04  Unexpected  Rebooting due to critical process (network/nsm)
failure!
2016-10-09 19:56:16  Expected    User Request
2016-10-09 19:51:20  Expected    User Request
```

Table 5: Parameters in the output from the **show reboot history** command

Parameter	Description
Unexpected	A non-intended reboot.
Expected	A planned or user-triggered reboot.
User request	User initiated reboot via the CLI.

Related Commands show tech-support

show router-id

Overview Use this command to show the Router ID of the current system.

Syntax

```
show router-id
```

Mode User Exec and Privileged Exec

Example To display the Router ID of the current system, use the command:

```
awplus# show router-id
```

Output Figure 6-14: Example output from the **show router-id** command

```
awplus>show router-id
Router ID: 10.55.0.2 (automatic)
```

show system

Overview This command displays general system information about the device, including the hardware, memory usage, and software version. It also displays location and contact details when these have been set.

For information on filtering and saving command output, see the "Getting Started with AlliedWare Plus" Feature Overview and Configuration Guide.

Syntax

```
show system
```

Mode User Exec and Privileged Exec

Example To display configuration information, use the command:

```
awplus# show system
```

Output Figure 6-15: Example output from **show system**

```
awplus#show system
System Status                                    Mon Nov 16 08:42:16 2015

Board       ID  Bay     Board Name                          Rev   Serial number
-------------------------------------------------------------------------------
Base       425          AR3050S                             X1-0  A05049G27NE2004
-------------------------------------------------------------------------------
RAM:  Total: 824680 kB Free: 634632 kB
Flash: 3.6GB Used: 109.1MB Available: 3.3GB
-------------------------------------------------------------------------------
Environment Status : ***Fault***
Uptime             : 0 days 23:11:05
Bootloader version : 5.0.6

Current software : AR3050S-5.4.5-2.1.rel
Software version : 5.4.5-2.1
Build date : Thu Nov 12 12:11:29 NZDT 2015

Current boot config: flash:/default.cfg (file exists)

System Name
 awplus
System Contact
System Location
```

Related Commands show system environment

show system environment

Overview This command displays the current environmental status of your device and any attached PSU, XEM, or other expansion option. The environmental status covers information about temperatures, fans, and voltage.

For information on filtering and saving command output, see the "Getting Started with AlliedWare Plus" Feature Overview and Configuration Guide.

Syntax

```
show system environment
```

Mode User Exec and Privileged Exec

Example To display the system's environmental status, use the command:

```
awplus# show system environment
```

Output Figure 6-16: Example output from **show system environment**

```
awplus#show system environment
Environment Monitoring Status

Overall Status: ***Fault***

Resource ID: 1  Name: AR4050S
ID  Sensor (Units)                    Reading  Low Limit High Limit Status
1   Fan: Fan (Rpm)                       3516       2411        -       Ok
2   Voltage: 2.5V (Volts)               2.461      2.344      2.865     Ok
3   Voltage: Battery (Volts)            1.181      2.700      3.586  FAULT
4   Voltage: 3.3V (Volts)               3.266      2.973      3.627     Ok
5   Voltage: 5.0V (Volts)               4.974      4.505      5.495     Ok
6   Voltage: 12V (Volts)               11.563     10.813     13.188     Ok
7   Voltage: 0.92V (Volts)              0.844      0.872      0.970  FAULT
8   Temp: Internal (Degrees C)             32   58(Hyst)         65     Ok
```

Related Commands show system

show system interrupts

Overview Use this command to display the number of interrupts for each IRQ (Interrupt Request) used to interrupt input lines on a PIC (Programmable Interrupt Controller) on your device.

For information on filtering and saving command output, see the "Getting Started with AlliedWare Plus" Feature Overview and Configuration Guide.

Syntax

```
show system interrupts
```

Mode User Exec and Privileged Exec

Example To display information about the number of interrupts for each IRQ in your device, use the command:

```
awplus# show system interrupts
```

Output Figure 6-17: Example output from the **show system interrupts** command

```
awplus#show system interrupts

           CPU0       CPU1
 8:      151378     152020      Core Enabled   0   timer
 16:          0          0       CIU Enabled   0   Ethernet
 25:        256          0     CIU-W Enabled   0   octeon_wdt
 26:          0        256     CIU-W Enabled   0   octeon_wdt
 41:     946096     947120     CIU-M Enabled   0   SMP-IPI
 51:          0          0       CIU Enabled   0   RGMII
 53:          0          0       CIU Enabled   0   Ethernet
 59:       1025          0       CIU Enabled   0   serial
 60:       5825          0       CIU Enabled   0   i2c-octeon
 61:          3          0       CIU Enabled   0   i2c-octeon
 63:          0          0       CIB Enabled   0   xhci-hcd:usb1
 65:          0          0  CIU-GPIO Enabled   0   0-0021
 ...
```

Related Commands show system environment

show system mac

Overview This command displays the physical MAC address of the device.

Syntax

```
show system mac
```

Mode User Exec and Privileged Exec

Example To display the physical MAC address enter the following command:

```
awplus# show system mac
```

Output Figure 6-18: Example output from the **show system mac** command

```
awplus#show system mac
0200.0034.5682
0200.0034.5683
0200.0034.5684
```

show system pci device

Overview Use this command to display the PCI devices on your device.

Syntax

```
show system pci device
```

Mode User Exec and Privileged Exec

Example To display information about the PCI devices on your device, use the command:

```
awplus# show system pci device
```

Related Commands show system environment

show system pci tree

show system pci tree

Overview Use this command to display the PCI tree on your device.

Syntax

```
show system pci tree
```

Mode User Exec and Privileged Exec

Example To display information about the PCI tree on your device, use the command:

```
awplus# show system pci tree
```

Related Commands

show system environment

show system pci device

show system serialnumber

Overview This command shows the serial number information for the device.

For information on filtering and saving command output, see the "Getting Started with AlliedWare Plus" Feature Overview and Configuration Guide.

Syntax

```
show system serialnumber
```

Mode User Exec and Privileged Exec

Example To display the serial number information for the device, use the command:

```
awplus# show system serialnumber
```

Output Figure 6-19: Example output from the **show system serial number** command

```
awplus#show system serialnumber
45AX5300X
```

show tech-support

Overview This command generates system and debugging information for the device and saves it to a file.

This command is useful for collecting a large amount of information so that it can then be analyzed for troubleshooting purposes. The output of this command can be provided to technical support staff when reporting a problem.

You can optionally limit the command output to display only information for a given protocol or feature. The features available depend on your device and will be a subset of the features listed in the table below.

Syntax

```
show tech-support
{[all|atmf|auth|bgp|card|dhcpsn|epsr|firewall|igmp|ip|ipv6|mld
|openflow|ospf|ospf6|pim|rip|ripng|stack|stp|system|tacacs+|
update]} [outfile <filename>]
```

Parameter	Description
`all`	Display full information
`atmf`	Display ATMF-specific information
`auth`	Display authentication-related information
`bgp`	Display BGP-related information
`card`	Display Chassis Card specific information
`dhcpsn`	Display DHCP Snooping specific information
`epsr`	Display EPSR specific information
`firewall`	Display firewall specific information
`igmp`	Display IGMP specific information
`ip`	Display IP specific information
`ipv6`	Display IPv6 specific information
`mld`	Display MLD specific information
`openflow`	Display information related to OpenFlow
`ospf`	Display OSPF related information
`ospf6`	Display OSPF6 specific information
`pim`	Display PIM related information
`rip`	RIP related information
`ripng`	Display RIPNG specific information
`stack`	Display stacking device information
`stp`	Display STP specific information
`system`	Display general system information

Parameter	Description
`tacacs+`	Display TACACS+ information
`update`	Display resource update specific information
`|`	Output modifier
`>`	Output redirection
`>>`	Output redirection (append)
`outfile`	Output file name
`<filename>`	Specifies a name for the output file. If no name is specified, this file will be saved as: tech-support.txt.gz.

Default Captures **all** information for the device.

By default the output is saved to the file 'tech-support.txt.gz' in the current directory. If this file already exists in the current directory then a new file is generated with the time stamp appended to the file name, for example 'tech-support20161009.txt.gz', so the previous file is retained.

Usage The command generates a large amount of output, which is saved to a file in compressed format. The output file name can be specified by outfile option. If the output file already exists, a new file name is generated with the current time stamp. If the output filename does not end with ".gz", then ".gz" is appended to the filename. Since output files may be too large for Flash on the device we recommend saving files to external memory or a TFTP server whenever possible to avoid device lockup. This method is not likely to be appropriate when running the working set option of AMF across a range of physically separated devices.

Mode Privileged Exec

Examples To produce the output needed by technical support staff, use the command:

```
awplus# show tech-support
```

speed (asyn)

Overview This command changes the console speed from the device. Note that a change in console speed is applied for subsequent console sessions. Exit the current session to enable the console speed change using the clear line console command.

Syntax

```
speed <console-speed-in-bps>
```

Parameter	Description	
<console-speed-in-bps>	Console speed Baud rate in bps (bits per second).	
	1200	1200 Baud
	2400	2400 Baud
	9600	9600 Baud
	19200	19200 Baud
	38400	38400 Baud
	57600	57600 Baud
	115200	115200 Baud

Default The default console speed baud rate is 9600 bps.

Mode Line Configuration

Usage This command is used to change the console (asyn) port speed. Set the console speed to match the transmission rate of the device connected to the console (asyn) port on your device.

Example To set the terminal console (asyn0) port speed from the device to 57600 bps, then exit the session, use the commands:

```
awplus# configure terminal
awplus(config)# line console 0
awplus(config-line)# speed 57600
awplus(config-line)# exit
awplus(config)# exit
awplus# exit
```

Then log in again to enable the change:

```
awplus login:
Password:
awplus>
```

Related Commands

clear line console

line

show running-config

show startup-config

speed

terminal monitor

Overview Use this command to display debugging output on a terminal.

To display the cursor after a line of debugging output, press the Enter key.

Use the command **terminal no monitor** to stop displaying debugging output on the terminal, or use the timeout option to stop displaying debugging output on the terminal after a set time.

Syntax

```
terminal monitor [<1-60>]
terminal no monitor
```

Parameter	Description
<1-60>	Set a timeout between 1 and 60 seconds for terminal output.

Default Disabled

Mode User Exec and Privileged Exec

Examples To display debugging output on a terminal, enter the command:

```
awplus# terminal monitor
```

To specify timeout of debugging output after 60 seconds, enter the command:

```
awplus# terminal monitor 60
```

To stop displaying debugging output on the terminal, use the command:

```
awplus# terminal no monitor
```

Related Commands All debug commands

undebug all

Overview This command applies the functionality of the no debug all command.

7 Logging Commands

Introduction

Overview This chapter provides an alphabetical reference of commands used to configure logging. See the Logging Feature Overview and Configuration Guide for more information about the different types of log and how to filter log messages.

Command List

- "clear exception log" on page 271
- "clear log" on page 272
- "clear log buffered" on page 273
- "clear log external" on page 274
- "clear log permanent" on page 275
- "connection-log events" on page 276
- "copy buffered-log" on page 277
- "copy permanent-log" on page 278
- "default log buffered" on page 279
- "default log console" on page 280
- "default log email" on page 281
- "default log external" on page 282
- "default log host" on page 283
- "default log monitor" on page 284
- "default log permanent" on page 285
- "log buffered" on page 286
- "log buffered (filter)" on page 287
- "log buffered exclude" on page 290
- "log buffered size" on page 293

- "log console" on page 294
- "log console (filter)" on page 295
- "log console exclude" on page 298
- "log date-format" on page 301
- "log email" on page 302
- "log email (filter)" on page 303
- "log email exclude" on page 306
- "log email time" on page 309
- "log external" on page 311
- "log external (filter)" on page 313
- "log external exclude" on page 316
- "log external rotate" on page 319
- "log external size" on page 321
- "log facility" on page 322
- "log host" on page 324
- "log host (filter)" on page 326
- "log host exclude" on page 329
- "log host source" on page 332
- "log host time" on page 333
- "log monitor (filter)" on page 335
- "log monitor exclude" on page 338
- "log permanent" on page 341
- "log permanent (filter)" on page 342
- "log permanent exclude" on page 345
- "log permanent size" on page 348
- "log-rate-limit nsm" on page 349
- "log trustpoint" on page 351
- "log url-requests" on page 352
- "show connection-log events" on page 353
- "show counter log" on page 354
- "show exception log" on page 355
- "show log" on page 356
- "show log config" on page 358
- "show log external" on page 360
- "show log permanent" on page 361

- "show running-config log" on page 362
- "unmount" on page 363

clear exception log

Overview This command resets the contents of the exception log, but does not remove the associated core files.

Syntax
```
clear exception log
```

Mode Privileged Exec

Example
```
awplus# clear exception log
```

clear log

Overview This command removes the contents of the buffered and permanent logs.

Syntax

```
clear log
```

Mode Privileged Exec

Example To delete the contents of the buffered and permanent log use the command:

```
awplus# clear log
```

Related Commands

clear log buffered

clear log permanent

show log

clear log buffered

Overview This command removes the contents of the buffered log.

Syntax

```
clear log buffered
```

Mode Privileged Exec

Example To delete the contents of the buffered log use the following commands:

```
awplus# clear log buffered
```

Related Commands

default log buffered

log buffered

log buffered (filter)

log buffered size

log buffered exclude

show log

show log config

clear log external

Overview Use this command to delete the external log file from the USB storage device it is stored on.

If the external log is rotating between multiple files, this command deletes all those files, not just the most recent one.

Syntax

```
clear log external
```

Mode Privileged Exec

Example To delete the external log file, use the command:

```
awplus# clear log external
```

Related Commands

default log external

log external

log external (filter)

log external exclude

log external rotate

log external size

show log config

show log external

unmount

Command changes Version 5.4.7-1.1: command added

clear log permanent

Overview This command removes the contents of the permanent log.

Syntax

```
clear log permanent
```

Mode Privileged Exec

Example To delete the contents of the permanent log use the following commands:

```
awplus# clear log permanent
```

Related Commands

default log permanent

log permanent

log permanent (filter)

log permanent exclude

log permanent size

show log config

show log permanent

connection-log events

Overview Use this command to enable extra logging for indicating the start and the end of connections passing through the firewall.

Use the **no** variant of this command to turn off the extra logging of connections passing through the firewall.

Syntax

```
connection-log events [new|end|all]
no connection-log events [new|end|all]
```

Parameter	Description
`new`	New connection
`end`	Connections closed
`all`	All new connections and connections closed. Default.

Default Connection logging is not enabled by default.

Mode Global Configuration.

Usage There are two types of messages you can log: new connections and connections that ended. You can control the amount of messages you log by choosing to log either type of message or all of the message types.

Messages contain the following information:

- time
- source and destination addresses (NATed and unNATed)
- protocol
- source and destination ports (NATed and unNATed)
- bytes and packets passed (found in the connection end message)

Example To log all of the new connections and all of the closed connections, use the commands:

```
awplus# configure terminal
awplus(config)# connection-log events all
```

Related Commands show connection-log events

Command changes Version 5.4.7-1.1: command added.

copy buffered-log

Overview Use this command to copy the buffered log to an internal or external destination.

Syntax

```
copy buffered-log <destination-name>
```

Parameter	Description
<destination-name>	The filename and path for the destination file. See Introduction on page 107 for valid syntax.

Mode Privileged Exec

Example To copy the buffered log file onto a USB storage device and name the file "buffered-log.log", use the command:

```
awplus# copy buffered-log usb:/buffered-log.log
```

Related Commands

log buffered

show file systems

show log

Command changes Version 5.4.7-1.1: command added

copy permanent-log

Overview Use this command to copy the permanent log to an internal or external destination.

Syntax

```
copy permanent-log <destination-name>
```

Parameter	Description
<destination-name>	The filename and path for the destination file. See Introduction on page 107 for valid syntax.

Mode Privileged Exec

Example To copy the permanent log file onto a USB storage device and name the file "permanent-log.log", use the command:

```
awplus# copy permanent-log usb:/permanent-log.log
```

Related Commands

log permanent

show file systems

show log permanent

Command changes Version 5.4.7-1.1: command added

default log buffered

Overview This command restores the default settings for the buffered log stored in RAM. By default the size of the buffered log is 50 kB and it accepts messages with the severity level of “warnings” and above.

Syntax

```
default log buffered
```

Default The buffered log is enabled by default.

Mode Global Configuration

Example To restore the buffered log to its default settings use the following commands:

```
awplus# configure terminal
awplus(config)# default log buffered
```

Related Commands

clear log buffered

log buffered

log buffered (filter)

log buffered size

log buffered exclude

show log

show log config

default log console

Overview This command restores the default settings for log messages sent to the terminal when a log console command is issued. By default all messages are sent to the console when a **log console** command is issued.

Syntax

```
default log console
```

Mode Global Configuration

Example To restore the log console to its default settings use the following commands:

```
awplus# configure terminal
awplus(config)# default log console
```

Related Commands

log console

log console (filter)

log console exclude

show log config

default log email

Overview This command restores the default settings for log messages sent to an email address. By default no filters are defined for email addresses. Filters must be defined before messages will be sent. This command also restores the remote syslog server time offset value to local (no offset).

Syntax

```
default log email <email-address>
```

Parameter	Description
<email-address>	The email address to send log messages to

Mode Global Configuration

Example To restore the default settings for log messages sent to the email address `admin@alliedtelesis.com` use the following commands:

```
awplus# configure terminal
awplus(config)# default log email admin@alliedtelesis.com
```

Related Commands

log email

log email (filter)

log email exclude

log email time

show log config

default log external

Overview Use this command to restore the default settings for the external log. By default, the size of the external log is 50 kB, it rotates through 1 additional file, and it accepts messages with a severity level of notices and above.

Note that this command does not clear the configured filename for the external log.

Syntax

```
default log external
```

Mode Global Configuration

Example To restore the default settings for the external log, use the commands:

```
awplus# configure terminal
awplus(config)# default log external
```

Related Commands

clear log external

log external

log external (filter)

log external exclude

log external rotate

log external size

show log config

show log external

unmount

Command changes Version 5.4.7-1.1: command added

default log host

Overview This command restores the default settings for log sent to a remote syslog server. By default no filters are defined for remote syslog servers. Filters must be defined before messages will be sent. This command also restores the remote syslog server time offset value to local (no offset).

Syntax

```
default log host <ip-addr>
```

Parameter	Description
<ip-addr>	The IP address of a remote syslog server

Mode Global Configuration

Example To restore the default settings for messages sent to the remote syslog server with IP address `10.32.16.21` use the following commands:

```
awplus# configure terminal
awplus(config)# default log host 10.32.16.21
```

Related Commands

log host

log host (filter)

log host exclude

log host source

log host time

show log config

default log monitor

Overview This command restores the default settings for log messages sent to the terminal when a terminal monitor command is used.

Syntax

```
default log monitor
```

Default All messages are sent to the terminal when a terminal monitor command is used.

Mode Global Configuration

Example To restore the log monitor to its default settings use the following commands:

```
awplus# configure terminal
awplus(config)# default log monitor
```

Related Commands

log monitor (filter)

log monitor exclude

show log config

terminal monitor

default log permanent

Overview This command restores the default settings for the permanent log stored in NVS. By default, the size of the permanent log is 50 kB and it accepts messages with the severity level of `warnings` and above.

Syntax
```
default log permanent
```

Default The permanent log is enabled by default.

Mode Global Configuration

Example To restore the permanent log to its default settings use the following commands:

```
awplus# configure terminal
awplus(config)# default log permanent
```

Related Commands
clear log permanent
log permanent
log permanent (filter)
log permanent exclude
log permanent size
show log config
show log permanent

log buffered

Overview This command configures the device to store log messages in RAM. Messages stored in RAM are not retained on the device over a restart. Once the buffered log reaches its configured maximum allowable size old messages will be deleted to make way for new ones.

Syntax

```
log buffered
no log buffered
```

Default The buffered log is configured by default.

Mode Global Configuration

Examples To configured the device to store log messages in RAM use the following commands:

```
awplus# configure terminal
awplus(config)# log buffered
```

To configure the device to not store log messages in a RAM buffer use the following commands:

```
awplus# configure terminal
awplus(config)# no log buffered
```

Related Commands

clear log buffered

copy buffered-log

default log buffered

log buffered (filter)

log buffered size

log buffered exclude

show log

show log config

log buffered (filter)

Overview Use this command to create a filter to select messages to be sent to the buffered log. Selection can be based on the priority/ severity of the message, the program that generated the message, the logging facility used, a sub-string within the message or a combination of some or all of these.

The **no** variant of this command removes the corresponding filter, so that the specified messages are no longer sent to the buffered log.

Syntax

```
log buffered [level <level>] [program <program-name>] [facility
<facility>] [msgtext <text-string>]

no log buffered [level <level>] [program <program-name>]
[facility <facility>] [msgtext <text-string>]
```

Parameter	Description	
`level`	Filter messages to the buffered log by severity level.	
<level>	The minimum severity of message to send to the buffered log. The level can be specified as one of the following numbers or level names, where 0 is the highest severity and 7 is the lowest severity:	
	`0|emergencies`	System is unusable
	`1|alerts`	Action must be taken immediately
	`2|critical`	Critical conditions
	`3|errors`	Error conditions
	`4|warnings`	Warning conditions
	`5|notices`	Normal, but significant, conditions
	`6|informational`	Informational messages
	`7|debugging`	Debug-level messages
`program`	Filter messages to the buffered log by program. Include messages from a specified program in the buffered log.	
<program-name>	The name of a program to log messages from, either one of the following predefined program names (not case-sensitive), or another program name (case-sensitive) that you find in the log output:	
	`rip`	Routing Information Protocol (RIP)
	`ripng`	Routing Information Protocol - next generation (RIPng)
	`ospf`	Open Shortest Path First (OSPF)
	`ospfv3`	Open Shortest Path First (OSPF) version 3 (OSPFv3)
	`bgp`	Border Gateway Protocol (BGP)
	`rsvp`	Resource Reservation Protocol (RSVP)
	`pim-sm`	Protocol Independent Multicast - Sparse Mode (PIM-SM)

Parameter	Description	
	`pim-smv6`	PIM-SM version 6 (PIM-SMv6)
	`lacp`	Link Aggregation Control Protocol (LACP)
	`stp`	Spanning Tree Protocol (STP)
	`rstp`	Rapid Spanning Tree Protocol (RSTP)
	`mstp`	Multiple Spanning Tree Protocol (MSTP)
	`imi`	Integrated Management Interface (IMI)
	`imish`	Integrated Management Interface Shell (IMISH)
`facility`	Filter messages to the buffered log by syslog facility.	
<facility>	Specify one of the following syslog facilities to include messages from in the buffered log:	
	`kern`	Kernel messages
	`user`	Random user-level messages
	`mail`	Mail system
	`daemon`	System daemons
	`auth`	Security/authorization messages
	`syslog`	Messages generated internally by syslogd
	`lpr`	Line printer subsystem
	`news`	Network news subsystem
	`uucp`	UUCP subsystem
	`cron`	Clock daemon
	`authpriv`	Security/authorization messages (private)
	`ftp`	FTP daemon
`msgtext`	Select messages containing a certain text string.	
<text-string>	A text string to match (maximum 128 characters). This is case sensitive, and must be the last text on the command line.	

Default By default the buffered log has a filter to select messages whose severity level is "notices (5)" or higher. This filter may be removed using the **no** variant of this command.

Mode Global Configuration

Examples To add a filter to send all messages containing the text "Bridging initialization" to the buffered log, use the following commands:

```
awplus# configure terminal
awplus(config)# log buffered msgtext Bridging initialization
```

To remove a filter that sends all messages containing the text “Bridging initialization” to the buffered log, use the following commands:

```
awplus# configure terminal
awplus(config)# no log buffered msgtext Bridging initialization
```

Related Commands

clear log buffered

default log buffered

log buffered

log buffered size

log buffered exclude

show log

show log config

log buffered exclude

Overview Use this command to exclude specified log messages from the buffered log. You can exclude messages on the basis of:

- the priority/severity of the message
- the program that generated the message
- the logging facility used
- a sub-string within the message, or
- a combination of some or all of these.

Use the **no** variant of this command to stop excluding the specified messages.

Syntax

```
log buffered exclude [level <level>] [program <program-name>]
[facility <facility>] [msgtext <text-string>]
```

```
no log buffered exclude [level <level>] [program
<program-name>] [facility <facility>] [msgtext <text-string>]
```

Parameter	Description	
`level`	Exclude messages of the specified severity level.	
<level>	The severity level to exclude. The level can be specified as one of the following numbers or level names, where 0 is the highest severity and 7 is the lowest severity:	
	`0|emergencies`	System is unusable
	`1|alerts`	Action must be taken immediately
	`2|critical`	Critical conditions
	`3|errors`	Error conditions
	`4|warnings`	Warning conditions
	`5|notices`	Normal, but significant, conditions
	`6|informational`	Informational messages
	`7|debugging`	Debug-level messages
`program`	Exclude messages from a specified program.	
<program-name>	The name of a program. Either one of the following predefined program names (not case-sensitive), or another program name (case-sensitive) that you find in the log output.	
	`rip`	Routing Information Protocol (RIP)
	`ripng`	Routing Information Protocol - next generation (RIPng)
	`ospf`	Open Shortest Path First (OSPF)
	`ospfv3`	Open Shortest Path First (OSPF) version 3 (OSPFv3)
	`bgp`	Border Gateway Protocol (BGP)
	`rsvp`	Resource Reservation Protocol (RSVP)

Parameter	Description	
	`pim-sm`	Protocol Independent Multicast - Sparse Mode (PIM-SM)
	`pim-smv6`	PIM-SM version 6 (PIM-SMv6)
	`lacp`	Link Aggregation Control Protocol (LACP)
	`stp`	Spanning Tree Protocol (STP)
	`rstp`	Rapid Spanning Tree Protocol (RSTP)
	`mstp`	Multiple Spanning Tree Protocol (MSTP)
	`imi`	Integrated Management Interface (IMI)
	`imish`	Integrated Management Interface Shell (IMISH)
`facility`	Exclude messages from a syslog facility.	
<facility>	Specify one of the following syslog facilities to exclude messages from:	
	`kern`	Kernel messages
	`user`	Random user-level messages
	`mail`	Mail system
	`daemon`	System daemons
	`auth`	Security/authorization messages
	`syslog`	Messages generated internally by syslogd
	`lpr`	Line printer subsystem
	`news`	Network news subsystem
	`uucp`	UUCP subsystem
	`cron`	Clock daemon
	`authpriv`	Security/authorization messages (private)
	`ftp`	FTP daemon
`msgtext`	Exclude messages containing a certain text string.	
<text-string>	A text string to match (maximum 128 characters). This is case sensitive, and must be the last text on the command line.	

Default No log messages are excluded

Mode Global configuration

Example To remove messages that contain the string “example of irrelevant message”, use the following commands:

```
awplus# configure terminal
awplus(config)# log buffered exclude msgtext example of
irrelevant message
```

Related Commands

clear log buffered

default log buffered

log buffered

log buffered (filter)

log buffered size

show log

show log config

log buffered size

Overview This command configures the amount of memory that the buffered log is permitted to use. Once this memory allocation has been filled old messages will be deleted to make room for new messages.

Syntax

```
log buffered size <50-250>
```

Parameter	Description
<50-250>	Size of the RAM log in kilobytes

Mode Global Configuration

Example To allow the buffered log to use up to 100 kB of RAM use the following commands:

```
awplus# configure terminal
awplus(config)# log buffered size 100
```

Related Commands

clear log buffered

copy buffered-log

default log buffered

log buffered

log buffered (filter)

log buffered exclude

show log

show log config

log console

Overview This command configures the device to send log messages to consoles. The console log is configured by default to send messages to the device's main console port.

Use the **no** variant of this command to configure the device not to send log messages to consoles.

Syntax

```
log console
no log console
```

Mode Global Configuration

Examples To configure the device to send log messages use the following commands:

```
awplus# configure terminal
awplus(config)# log console
```

To configure the device not to send log messages in all consoles use the following commands:

```
awplus# configure terminal
awplus(config)# no log console
```

Related Commands

default log console

log console (filter)

log console exclude

show log config

log console (filter)

Overview This command creates a filter to select messages to be sent to all consoles when the **log console** command is given. Selection can be based on the priority/severity of the message, the program that generated the message, the logging facility used, a sub-string within the message or a combination of some or all of these.

Syntax

```
log console [level <level>] [program <program-name>] [facility
<facility>] [msgtext <text-string>]
```

```
no log console [level <level>] [program <program-name>]
[facility <facility>] [msgtext <text-string>]
```

Parameter	Description	
`level`	Filter messages by severity level.	
<level>	The minimum severity of message to send. The level can be specified as one of the following numbers or level names, where 0 is the highest severity and 7 is the lowest severity:	
	`0|emergencies`	System is unusable
	`1|alerts`	Action must be taken immediately
	`2|critical`	Critical conditions
	`3|errors`	Error conditions
	`4|warnings`	Warning conditions
	`5|notices`	Normal, but significant, conditions
	`6|informational`	Informational messages
	`7|debugging`	Debug-level messages
`program`	Filter messages by program. Include messages from a specified program.	
<program-name>	The name of a program to log messages from, either one of the following predefined program names (not case-sensitive), or another program name (case-sensitive) that you find in the log output:	
	`rip`	Routing Information Protocol (RIP)
	`ripng`	Routing Information Protocol - next generation (RIPng)
	`ospf`	Open Shortest Path First (OSPF)
	`ospfv3`	Open Shortest Path First (OSPF) version 3 (OSPFv3)
	`bgp`	Border Gateway Protocol (BGP)
	`rsvp`	Resource Reservation Protocol (RSVP)
	`pim-sm`	Protocol Independent Multicast - Sparse Mode (PIM-SM)
	`pim-smv6`	PIM-SM version 6 (PIM-SMv6)
	`lacp`	Link Aggregation Control Protocol (LACP)
	`stp`	Spanning Tree Protocol (STP)

Parameter	Description	
	`rstp`	Rapid Spanning Tree Protocol (RSTP)
	`mstp`	Multiple Spanning Tree Protocol (MSTP)
	`imi`	Integrated Management Interface (IMI)
	`imish`	Integrated Management Interface Shell (IMISH)
`facility`	Filter messages by syslog facility.	
<facility>	Specify one of the following syslog facilities to include messages from:	
	`kern`	Kernel messages
	`user`	Random user-level messages
	`mail`	Mail system
	`daemon`	System daemons
	`auth`	Security/authorization messages
	`syslog`	Messages generated internally by syslogd
	`lpr`	Line printer subsystem
	`news`	Network news subsystem
	`uucp`	UUCP subsystem
	`cron`	Clock daemon
	`authpriv`	Security/authorization messages (private)
	`ftp`	FTP daemon
`msgtext`	Select messages containing a certain text string.	
<text-string>	A text string to match (maximum 128 characters). This is case sensitive, and must be the last text on the command line.	

Default By default the console log has a filter to select messages whose severity level is `critical` or higher. This filter may be removed using the **no** variant of this command. This filter may be removed and replaced by filters that are more selective.

Mode Global Configuration

Examples To create a filter to send all messages containing the text “Bridging initialization” to console instances where the **log console** command has been entered, use the following commands:

```
awplus# configure terminal
awplus(config)# log console msgtext "Bridging initialization"
```

To remove a default filter that includes sending **critical**, **alert** and **emergency** level messages to the console, use the following commands:

```
awplus# configure terminal
awplus(config)# no log console level critical
```

Related Commands

default log console

log console

log console exclude

show log config

log console exclude

Overview Use this command to prevent specified log messages from being sent to the console, when console logging is turned on. You can exclude messages on the basis of:

- the priority/severity of the message
- the program that generated the message
- the logging facility used
- a sub-string within the message, or
- a combination of some or all of these.

Use the **no** variant of this command to stop excluding the specified messages.

Syntax

```
log console exclude [level <level>] [program <program-name>]
[facility <facility>] [msgtext <text-string>]
```

```
no log console exclude [level <level>] [program <program-name>]
[facility <facility>] [msgtext <text-string>]
```

Parameter	Description	
`level`	Exclude messages of the specified severity level.	
<level>	The severity level to exclude. The level can be specified as one of the following numbers or level names, where 0 is the highest severity and 7 is the lowest severity:	
	`0|emergencies`	System is unusable
	`1|alerts`	Action must be taken immediately
	`2|critical`	Critical conditions
	`3|errors`	Error conditions
	`4|warnings`	Warning conditions
	`5|notices`	Normal, but significant, conditions
	`6|informational`	Informational messages
	`7|debugging`	Debug-level messages
`program`	Exclude messages from a specified program.	
<program-name>	The name of a program. Either one of the following predefined program names (not case-sensitive), or another program name (case-sensitive) that you find in the log output.	
	`rip`	Routing Information Protocol (RIP)
	`ripng`	Routing Information Protocol - next generation (RIPng)
	`ospf`	Open Shortest Path First (OSPF)
	`ospfv3`	Open Shortest Path First (OSPF) version 3 (OSPFv3)
	`bgp`	Border Gateway Protocol (BGP)

Parameter	Description	
	`rsvp`	Resource Reservation Protocol (RSVP)
	`pim-sm`	Protocol Independent Multicast - Sparse Mode (PIM-SM)
	`pim-smv6`	PIM-SM version 6 (PIM-SMv6)
	`lacp`	Link Aggregation Control Protocol (LACP)
	`stp`	Spanning Tree Protocol (STP)
	`rstp`	Rapid Spanning Tree Protocol (RSTP)
	`mstp`	Multiple Spanning Tree Protocol (MSTP)
	`imi`	Integrated Management Interface (IMI)
	`imish`	Integrated Management Interface Shell (IMISH)
`facility`	Exclude messages from a syslog facility.	
<facility>	Specify one of the following syslog facilities to exclude messages from:	
	`kern`	Kernel messages
	`user`	Random user-level messages
	`mail`	Mail system
	`daemon`	System daemons
	`auth`	Security/authorization messages
	`syslog`	Messages generated internally by syslogd
	`lpr`	Line printer subsystem
	`news`	Network news subsystem
	`uucp`	UUCP subsystem
	`cron`	Clock daemon
	`authpriv`	Security/authorization messages (private)
	`ftp`	FTP daemon
`msgtext`	Exclude messages containing a certain text string.	
<text-string>	A text string to match (maximum 128 characters). This is case sensitive, and must be the last text on the command line.	

Default No log messages are excluded

Mode Global configuration

Example To remove messages that contain the string “example of irrelevant message”, use the following commands:

```
awplus# configure terminal
awplus(config)# log console exclude msgtext example of
irrelevant message
```

Related Commands

default log console

log console

log console (filter)

show log config

log date-format

Overview Use this command to change the date format for log messages to an ISO 8601 compliant format, or to return to the default date format.

Syntax

```
log date-format {iso|default}
```

Parameter	Description
`iso`	Display the date and time in the ISO 8601 compliant format of: YYYY-MM-DDThh:mm:ssTZD
`default`	Display the date and time in the default date format of YYYY MMM DD HH:MM:SS

Default The default option of YYYY MMM DD HH:MM:SS (except when using terminal monitor, when it is HH:MM:SS)

Mode Global Configuration

Usage In the ISO 8601 compliant format, a T separates the date from the time, and the time is followed by the timezone offset from UTC time. For example, this is a log message with an ISO 8601 compliant date:

```
2016-09-29T08:55:43+13:00 user.notice Gateway IMISH[1983]:
[manager@ttyS0]show run
```

This is a log message with the default date format:

```
2016 Sep 29 08:55:43 user.notice Gateway IMISH[1983]:
[manager@ttyS0]show run
```

The date format setting affects all log messages, no matter where the messages are stored or displayed.

Examples To set the date format to the ISO 8601 compliant format, use the commands:

```
awplus# configure terminal
awplus(config)# log date-format iso
```

To return to the default date format of YYYY MMM DD HH:MM:SS, use the commands:

```
awplus# configure terminal
awplus(config)# log date-format default
```

Related Commands

show exception log

show log

show log permanent

Command changes Version 5.4.6-2.1: command added

log email

Overview This command configures the device to send log messages to an email address. The email address is specified in this command.

Syntax

```
log email <email-address>
```

Parameter	Description
<email-address>	The email address to send log messages to

Default By default no filters are defined for email log targets. Filters must be defined before messages will be sent.

Mode Global Configuration

Example To have log messages emailed to the email address `admin@alliedtelesis.com` use the following commands:

```
awplus# configure terminal
awplus(config)# log email admin@alliedtelesis.com
```

Related Commands

default log email

log email (filter)

log email exclude

log email time

show log config

log email (filter)

Overview This command creates a filter to select messages to be sent to an email address. Selection can be based on the priority/ severity of the message, the program that generated the message, the logging facility used, a sub-string within the message or a combination of some or all of these.

The **no** variant of this command configures the device to no longer send log messages to a specified email address. All configuration relating to this log target will be removed.

Syntax

```
log email <email-address> [level <level>] [program
<program-name>] [facility <facility>] [msgtext <text-string>]
```

```
no log email <email-address> [level <level>] [program
<program-name>] [facility <facility>] [msgtext <text-string>]
```

Parameter	Description	
<email-address>	The email address to send logging messages to	
`level`	Filter messages by severity level.	
<level>	The minimum severity of message to send. The level can be specified as one of the following numbers or level names, where 0 is the highest severity and 7 is the lowest severity:	
	`0|emergencies`	System is unusable
	`1|alerts`	Action must be taken immediately
	`2|critical`	Critical conditions
	`3|errors`	Error conditions
	`4|warnings`	Warning conditions
	`5|notices`	Normal, but significant, conditions
	`6|informational`	Informational messages
	`7|debugging`	Debug-level messages
`program`	Filter messages by program. Include messages from a specified program.	
<program-name>	The name of a program to log messages from, either one of the following predefined program names (not case-sensitive), or another program name (case-sensitive) that you find in the log output:	
	`rip`	Routing Information Protocol (RIP)
	`ripng`	Routing Information Protocol - next generation (RIPng)
	`ospf`	Open Shortest Path First (OSPF)
	`ospfv3`	Open Shortest Path First (OSPF) version 3 (OSPFv3)
	`bgp`	Border Gateway Protocol (BGP)
	`rsvp`	Resource Reservation Protocol (RSVP)

Parameter	Description	
	`pim-sm`	Protocol Independent Multicast - Sparse Mode (PIM-SM)
	`pim-smv6`	PIM-SM version 6 (PIM-SMv6)
	`lacp`	Link Aggregation Control Protocol (LACP)
	`stp`	Spanning Tree Protocol (STP)
	`rstp`	Rapid Spanning Tree Protocol (RSTP)
	`mstp`	Multiple Spanning Tree Protocol (MSTP)
	`imi`	Integrated Management Interface (IMI)
	`imish`	Integrated Management Interface Shell (IMISH)
`facility`	Filter messages by syslog facility.	
<facility>	Specify one of the following syslog facilities to include messages from:	
	`kern`	Kernel messages
	`user`	Random user-level messages
	`mail`	Mail system
	`daemon`	System daemons
	`auth`	Security/authorization messages
	`syslog`	Messages generated internally by syslogd
	`lpr`	Line printer subsystem
	`news`	Network news subsystem
	`uucp`	UUCP subsystem
	`cron`	Clock daemon
	`authpriv`	Security/authorization messages (private)
	`ftp`	FTP daemon
`msgtext`	Select messages containing a certain text string.	
<text-string>	A text string to match (maximum 128 characters). This is case sensitive, and must be the last text on the command line.	

Mode Global Configuration

Examples To create a filter to send all messages containing the text “Bridging initialization”, to the email address admin@homebase.com, use the following commands:

```
awplus# configure terminal
awplus(config)# log email admin@homebase.com msgtext "Bridging initialization"
```

To create a filter to send messages with a severity level of **informational** and above to the email address admin@alliedtelesis.com, use the following commands:

```
awplus# configure terminal
awplus(config)# log email admin@alliedtelesis.com level
informational
```

To stop the device emailing log messages emailed to the email address admin@alliedtelesis.com, use the following commands:

```
awplus# configure terminal
awplus(config)# no log email admin@homebase.com
```

To remove a filter that sends messages with a severity level of **informational** and above to the email address admin@alliedtelesis.com, use the following commands:

```
awplus# configure terminal
awplus(config)# no log email admin@alliedtelesis.com level
informational
```

Related Commands

default log email

log email

log email exclude

log email time

show log config

log email exclude

Overview Use this command to prevent specified log messages from being emailed, when the device is configured to send log messages to an email address. You can exclude messages on the basis of:

- the priority/severity of the message
- the program that generated the message
- the logging facility used
- a sub-string within the message, or
- a combination of some or all of these.

Use the **no** variant of this command to stop excluding the specified messages.

Syntax

```
log email exclude [level <level>] [program <program-name>]
[facility <facility>] [msgtext <text-string>]
```

```
no log email exclude [level <level>] [program <program-name>]
[facility <facility>] [msgtext <text-string>]
```

Parameter	Description	
`level`	Exclude messages of the specified severity level.	
<level>	The severity level to exclude. The level can be specified as one of the following numbers or level names, where 0 is the highest severity and 7 is the lowest severity:	
	`0|emergencies`	System is unusable
	`1|alerts`	Action must be taken immediately
	`2|critical`	Critical conditions
	`3|errors`	Error conditions
	`4|warnings`	Warning conditions
	`5|notices`	Normal, but significant, conditions
	`6|informational`	Informational messages
	`7|debugging`	Debug-level messages
`program`	Exclude messages from a specified program.	
<program-name>	The name of a program. Either one of the following predefined program names (not case-sensitive), or another program name (case-sensitive) that you find in the log output.	
	`rip`	Routing Information Protocol (RIP)
	`ripng`	Routing Information Protocol - next generation (RIPng)
	`ospf`	Open Shortest Path First (OSPF)
	`ospfv3`	Open Shortest Path First (OSPF) version 3 (OSPFv3)
	`bgp`	Border Gateway Protocol (BGP)

Parameter	Description	
	`rsvp`	Resource Reservation Protocol (RSVP)
	`pim-sm`	Protocol Independent Multicast - Sparse Mode (PIM-SM)
	`pim-smv6`	PIM-SM version 6 (PIM-SMv6)
	`lacp`	Link Aggregation Control Protocol (LACP)
	`stp`	Spanning Tree Protocol (STP)
	`rstp`	Rapid Spanning Tree Protocol (RSTP)
	`mstp`	Multiple Spanning Tree Protocol (MSTP)
	`imi`	Integrated Management Interface (IMI)
	`imish`	Integrated Management Interface Shell (IMISH)
`facility`	Exclude messages from a syslog facility.	
<facility>	Specify one of the following syslog facilities to exclude messages from:	
	`kern`	Kernel messages
	`user`	Random user-level messages
	`mail`	Mail system
	`daemon`	System daemons
	`auth`	Security/authorization messages
	`syslog`	Messages generated internally by syslogd
	`lpr`	Line printer subsystem
	`news`	Network news subsystem
	`uucp`	UUCP subsystem
	`cron`	Clock daemon
	`authpriv`	Security/authorization messages (private)
	`ftp`	FTP daemon
`msgtext`	Exclude messages containing a certain text string.	
<text-string>	A text string to match (maximum 128 characters). This is case sensitive, and must be the last text on the command line.	

Default No log messages are excluded

Mode Global configuration

Example To remove messages that contain the string “example of irrelevant message”, use the following commands:

```
awplus# configure terminal
awplus(config)# log email exclude msgtext example of irrelevant message
```

Related Commands

default log email

log email

log email (filter)

log email time

show log config

log email time

Overview This command configures the time used in messages sent to an email address. If the syslog server is in a different time zone to your device then the time offset can be configured using either the **utc-offset** parameter option keyword or the **local-offset** parameter option keyword, where **utc-offset** is the time difference from UTC (Universal Time, Coordinated) and **local-offset** is the difference from local time.

Syntax

```
log email <email-address> time {local|local-offset|utc-offset
{plus|minus}<0-24>}
```

Parameter	Description
<email-address>	The email address to send log messages to
`time`	Specify the time difference between the email recipient and the device you are configuring.
`local`	The device is in the same time zone as the email recipient
`local-offset`	The device is in a different time zone to the email recipient. Use the **plus** or **minus** keywords and specify the difference (offset) from local time of the device to the email recipient in hours.
`utc-offset`	The device is in a different time zone to the email recipient. Use the **plus** or **minus** keywords and specify the difference (offset) from UTC time of the device to the email recipient in hours.
`plus`	Negative offset (difference) from the device to the email recipient.
`minus`	Positive offset (difference) from the device to the email recipient.
<0-24>	World Time zone offset in hours

Default The default is **local** time.

Mode Global Configuration

Usage Use the **local** option if the email recipient is in the same time zone as this device. Messages will display the time as on the local device when the message was generated.

Use the **offset** option if the email recipient is in a different time zone to this device. Specify the time offset of the email recipient in hours. Messages will display the time they were generated on this device but converted to the time zone of the email recipient.

Examples

To send messages to the email address `test@home.com` in the same time zone as the device's local time zone, use the following commands:

```
awplus# configure terminal
awplus(config)# log email admin@base.com time local 0
```

To send messages to the email address `admin@base.com` with the time information converted to the time zone of the email recipient, which is 3 hours ahead of the device's local time zone, use the following commands:

```
awplus# configure terminal
awplus(config)# log email admin@base.com time local-offset plus
3
```

To send messages to the email address `user@remote.com` with the time information converted to the time zone of the email recipient, which is 3 hours behind the device's UTC time zone, use the following commands:

```
awplus# configure terminal
awplus(config)# log email user@remote.com time utc-offset minus
3
```

Related Commands

default log email

log email

log email (filter)

log email exclude

show log config

log external

Overview Use this command to enable external logging. External logging sends syslog messages to a file on a USB storage device.

If the file does not already exist on the storage device, it (and any specified subdirectory) will be automatically created. If the file already exists, messages are appended to it.

Use the **no** variant of this command to disable external logging.

Syntax

```
log external <filename>
no log external
```

Parameter	Description
<filename>	The file and optionally directory path to store the log messages in. See Introduction on page 107 for valid syntax.

Default External logging is disabled by default.

Mode Global Configuration

Usage We strongly recommend using ext3 or ext4 as the file system on the external storage device. These file systems have a lower risk of file corruption occurring if the switch or firewall loses power.

You should also unmount the storage device before removing it from the switch or firewall, to avoid corrupting the log file. To unmount the device, use the **unmount** command.

If you are using this on a VCStack, each stack member needs to have its own external storage device. Enabling or disabling external logging enables or disables it on all stack members.

Example To save messages to a file called “messages.log” in a directory called “log” on a USB storage device, use the command:

```
awplus# configure terminal
awplus(config)# log external usb:/log/messages.log
```

Related Commands

clear log external

default log external

log external (filter)

log external exclude

log external rotate

log external size

show log config

show log external

unmount

Command changes Version 5.4.7-1.1: command added

log external (filter)

Overview Use this command to create a filter to select messages to be sent to the external log. You can include messages based on:

- the priority/severity of the message
- the program that generated the message
- the logging facility used
- a sub-string within the message, or
- a combination of some or all of these.

The **no** variant of this command removes the corresponding filter, so that the specified messages are no longer sent to the external log.

Syntax

```
log external [level <level>] [program <program-name>] [facility
<facility>] [msgtext <text-string>]
```

```
no log external [level <level>] [program <program-name>]
[facility <facility>] [msgtext <text-string>]
```

Parameter	Description	
`level`	Filter messages to the external log by severity level.	
<level>	The minimum severity of message to send to the external log. The level can be specified as one of the following numbers or level names, where 0 is the highest severity and 7 is the lowest severity:	
	`0|emergencies`	System is unusable
	`1|alerts`	Action must be taken immediately
	`2|critical`	Critical conditions
	`3|errors`	Error conditions
	`4|warnings`	Warning conditions
	`5|notices`	Normal, but significant, conditions
	`6|informational`	Informational messages
	`7|debugging`	Debug-level messages
`program`	Filter messages to the external log by program. Include messages from a specified program in the external log.	
<program-name>	The name of a program to log messages from, either one of the following predefined program names (not case-sensitive), or another program name (case-sensitive) that you find in the log output:	
	`rip`	Routing Information Protocol (RIP)
	`ripng`	Routing Information Protocol - next generation (RIPng)
	`ospf`	Open Shortest Path First (OSPF)

Parameter	Description	
	`ospfv3`	Open Shortest Path First (OSPF) version 3 (OSPFv3)
	`bgp`	Border Gateway Protocol (BGP)
	`rsvp`	Resource Reservation Protocol (RSVP)
	`pim-sm`	Protocol Independent Multicast - Sparse Mode (PIM-SM)
	`pim-smv6`	PIM-SM version 6 (PIM-SMv6)
	`lacp`	Link Aggregation Control Protocol (LACP)
	`stp`	Spanning Tree Protocol (STP)
	`rstp`	Rapid Spanning Tree Protocol (RSTP)
	`mstp`	Multiple Spanning Tree Protocol (MSTP)
	`imi`	Integrated Management Interface (IMI)
	`imish`	Integrated Management Interface Shell (IMISH)
`facility`	Filter messages to the external log by syslog facility.	
<facility>	Specify one of the following syslog facilities to include messages from in the log:	
	`kern`	Kernel messages
	`user`	Random user-level messages
	`mail`	Mail system
	`daemon`	System daemons
	`auth`	Security/authorization messages
	`syslog`	Messages generated internally by syslogd
	`lpr`	Line printer subsystem
	`news`	Network news subsystem
	`uucp`	UUCP subsystem
	`cron`	Clock daemon
	`authpriv`	Security/authorization messages (private)
	`ftp`	FTP daemon
`msgtext`	Select messages containing a certain text string.	
<text-string>	A text string to match (maximum 128 characters). This is case sensitive, and must be the last text on the command line.	

Default By default the external log has a filter to select messages whose severity level is "notices (5)" or higher. This filter may be removed using the **no** variant of this command.

Mode Global Configuration

Examples

To add a filter to send all messages containing the text “Bridging initialization” to the external log, use the following commands:

```
awplus# configure terminal
awplus(config)# log external msgtext Bridging initialization
```

To remove a filter that sends all messages containing the text “Bridging initialization” to the external log, use the following commands:

```
awplus# configure terminal
awplus(config)# no log external msgtext Bridging initialization
```

Related Commands

clear log external

default log external

log external

log external exclude

log external rotate

log external size

show log config

show log external

unmount

Command changes

Version 5.4.7-1.1: command added

log external exclude

Overview Use this command to exclude specified log messages from the external log. You can exclude messages on the basis of:

- the priority/severity of the message
- the program that generated the message
- the logging facility used
- a sub-string within the message, or
- a combination of some or all of these.

Use the **no** variant of this command to stop excluding the specified messages.

Syntax

```
log external exclude [level <level>] [program <program-name>]
[facility <facility>] [msgtext <text-string>]

no log external exclude [level <level>] [program
<program-name>] [facility <facility>] [msgtext <text-string>]
```

Parameter	Description	
`level`	Exclude messages of the specified severity level.	
<level>	The severity level to exclude. The level can be specified as one of the following numbers or level names, where 0 is the highest severity and 7 is the lowest severity:	
	`0|emergencies`	System is unusable
	`1|alerts`	Action must be taken immediately
	`2|critical`	Critical conditions
	`3|errors`	Error conditions
	`4|warnings`	Warning conditions
	`5|notices`	Normal, but significant, conditions
	`6|informational`	Informational messages
	`7|debugging`	Debug-level messages
`program`	Exclude messages from a specified program.	
<program-name>	The name of a program. Either one of the following predefined program names (not case-sensitive), or another program name (case-sensitive) that you find in the log output.	
	`rip`	Routing Information Protocol (RIP)
	`ripng`	Routing Information Protocol - next generation (RIPng)
	`ospf`	Open Shortest Path First (OSPF)
	`ospfv3`	Open Shortest Path First (OSPF) version 3 (OSPFv3)
	`bgp`	Border Gateway Protocol (BGP)
	`rsvp`	Resource Reservation Protocol (RSVP)

Parameter	Description	
	`pim-sm`	Protocol Independent Multicast - Sparse Mode (PIM-SM)
	`pim-smv6`	PIM-SM version 6 (PIM-SMv6)
	`lacp`	Link Aggregation Control Protocol (LACP)
	`stp`	Spanning Tree Protocol (STP)
	`rstp`	Rapid Spanning Tree Protocol (RSTP)
	`mstp`	Multiple Spanning Tree Protocol (MSTP)
	`imi`	Integrated Management Interface (IMI)
	`imish`	Integrated Management Interface Shell (IMISH)
`facility`	Exclude messages from a syslog facility.	
<facility>	Specify one of the following syslog facilities to exclude messages from:	
	`kern`	Kernel messages
	`user`	Random user-level messages
	`mail`	Mail system
	`daemon`	System daemons
	`auth`	Security/authorization messages
	`syslog`	Messages generated internally by syslogd
	`lpr`	Line printer subsystem
	`news`	Network news subsystem
	`uucp`	UUCP subsystem
	`cron`	Clock daemon
	`authpriv`	Security/authorization messages (private)
	`ftp`	FTP daemon
`msgtext`	Exclude messages containing a certain text string.	
<text-string>	A text string to match (maximum 128 characters). This is case sensitive, and must be the last text on the command line.	

Default No log messages are excluded

Mode Global Configuration

Example To remove messages that contain the string “example of irrelevant message”, use the following commands:

```
awplus# configure terminal
awplus(config)# log external exclude msgtext example of
irrelevant message
```

Related Commands clear log external

default log external

log external

log external (filter)

log external rotate

log external size

show log config

show log external

unmount

Command changes Version 5.4.7-1.1: command added

log external rotate

Overview Use this command to configure the number of files that the external log can rotate through.

Use the **no** variant of this command to return to the default.

Syntax

```
log external rotate <0-255>
no log external rotate
```

Parameter	Description
<0-255>	The number of additional files to rotate through. Note that the device rotates between the initial file and the number of additional files specified by this value - see the Usage section below.

Default The default is 1, which rotates between the initial file and 1 additional file (for example, rotates between messages.log and messages.log.1)

Mode Global Configuration

Usage The device rotates between the initial file and the number of additional files specified by this command. For example, the diagram below shows how setting rotate to 2 makes the device rotate through 3 files.

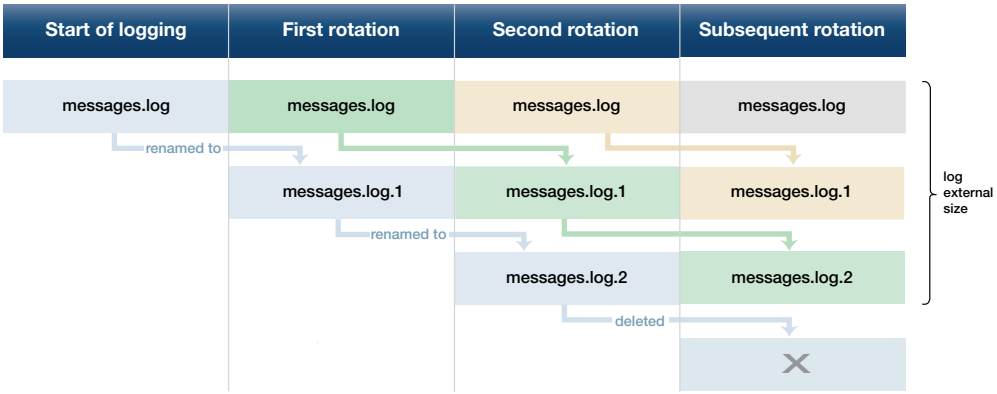

Note that if you set rotate to 0, and the external log file becomes full, then the device deletes the full log file and creates a new (empty) file of the same name to save messages into. For this reason, we recommend setting rotate to at least 1.

Example To set the rotation value to 2, and therefore rotate between 3 files, use the commands:

```
awplus# configure terminal
awplus(config)# log external rotate 2
```

Related Commands

clear log external

default log external

log external

log external (filter)

log external exclude

log external size

show log config

show log external

unmount

Command changes

Version 5.4.7-1.1: command added

log external size

Overview Use this command to configure the total amount of size that the external log is permitted to use, in kilobytes. The maximum possible depends on the storage device's file system.

Note that if you are rotating between multiple files, this is the maximum size of all files, not of each individual file. For example, if you are rotating between 2 files (**log external rotate 1**), each file will have a maximum size of 25 kBytes by default.

Use the **no** variant of this command to return to the default size.

Syntax

```
log external size [<50-4194304>]
no log external size
```

Parameter	Description
<50-4194304>	The total amount of size that the external log is permitted to use, in kilobytes.

Default 50 kBytes

Mode Global Configuration

Example To configure a total log size of 100 kBytes, use the commands:

```
awplus# configure terminal
awplus(config)# log external size 100
```

Related Commands

clear log external

default log external

log external

log external (filter)

log external exclude

log external rotate

log external size

show log config

show log external

unmount

Command changes Version 5.4.7-1.1: command added

log facility

Overview Use this command to assign a facility to all log messages generated on this device. This facility overrides any facility that is automatically generated as part of the log message.

Use the **no** variant of this command to remove the configured facility.

Syntax

```
log facility {kern|user|mail|daemon|auth|syslog|lpr|news|uucp|
cron|authpriv|ftp|local0|local1|local2|local3|local4|local5|
local6|local7}
```

```
no log facility
```

Default None. The outgoing syslog facility depends on the log message.

Mode Global Configuration

Usage Specifying different facilities for log messages generated on different devices can allow messages from multiple devices sent to a common server to be distinguished from each other.

Ordinarily, the facility values generated in log messages have meanings as shown in the following table. Using this command will override these meanings, and the new meanings will depend on the use you put them to.

Table 7-1: Ordinary meanings of the facility parameter in log messages

Facility	Description
kern	Kernel messages
user	User-level messages
mail	Mail system
daemon	System daemons
auth	Security/authorization messages
syslog	Messages generated internally by the syslog daemon
lpr	Line printer subsystem
news	Network news subsystem
uucp	UNIX-to-UNIX Copy Program subsystem
cron	Clock daemon
authpriv	Security/authorization (private) messages

Table 7-1: Ordinary meanings of the facility parameter in log messages (cont.)

Facility	Description
ftp	FTP daemon
local<0..7>	The facility labels above have specific meanings, while the local facility labels are intended to be put to local use. In AlliedWare Plus, some of these local facility labels are used in log messages. In particular, local5 is assigned to log messages generated by UTM Firewall security features.

Example To specify a facility of local6, use the following commands:

```
awplus# configure terminal
awplus(config)# log facility local6
```

Related Commands show log config

log host

Overview This command configures the device to send log messages to a remote syslog server via UDP port 514. The IP address of the remote server must be specified. By default no filters are defined for remote syslog servers. Filters must be defined before messages will be sent.

Use the **no** variant of this command to stop sending log messages to the remote syslog server.

Syntax

```
log host <ipv4-addr> [secure]
log host <ipv6-addr>
no log host <ipv4-addr>|<ipv6-addr>
```

Parameter	Description
<ipv4-addr>	Specify the source IPv4 address, in dotted decimal notation (A.B.C.D).
<ipv6-addr>	Specify the source IPv6 address, in X:X::X:X notation.
secure	Optional value to create a secure log destination. This option is only valid for IPv4 hosts.

Mode Global Configuration

Usage Use the optional **secure** parameter to configure a secure IPv4 syslog host. For secure hosts, syslog over TLS is used to encrypt the logs. The certificate received from the remote log server must have an issuer chain that terminates with the root CA certificate for any of the trustpoints that are associated with the application.

The remote server may also request that a certificate is transmitted from the local device. In this situation the first trustpoint added to the syslog application will be transmitted to the remote server.

For detailed information about securing syslog, see the PKI Feature Overview_and Configuration Guide.

Examples To configure the device to send log messages to a remote secure syslog server with IP address 10.32.16.99, use the following commands:

```
awplus# configure terminal
awplus(config)# log host 10.32.16.99 secure
```

To stop the device from sending log messages to the remote syslog server with IP address 10.32.16.99, use the following commands:

```
awplus# configure terminal
awplus(config)# no log host 10.32.16.99
```

Related Commands default log host

log host (filter)

log host exclude

log host source

log host time

log trustpoint

show log config

log host (filter)

Overview This command creates a filter to select messages to be sent to a remote syslog server. Selection can be based on the priority/severity of the message, the program that generated the message, the logging facility used, a substring within the message or a combination of some or all of these.

The **no** variant of this command configures the device to no longer send log messages to a remote syslog server. The IP address of the syslog server must be specified. All configuration relating to this log target will be removed.

Syntax

```
log host <ip-addr> [level <level>] [program <program-name>]
[facility <facility>] [msgtext <text-string>]
```

```
no log host <ip-addr> [level <level>] [program <program-name>]
[facility <facility>] [msgtext <text-string>]
```

Parameter	Description	
<ip-addr>	The IP address of a remote syslog server.	
`level`	Filter messages by severity level.	
<level>	The minimum severity of message to send. The level can be specified as one of the following numbers or level names, where 0 is the highest severity and 7 is the lowest severity:	
	`0|emergencies`	System is unusable
	`1|alerts`	Action must be taken immediately
	`2|critical`	Critical conditions
	`3|errors`	Error conditions
	`4|warnings`	Warning conditions
	`5|notices`	Normal, but significant, conditions
	`6|informational`	Informational messages
	`7|debugging`	Debug-level messages
`program`	Filter messages by program. Include messages from a specified program.	
<program-name>	The name of a program to log messages from, either one of the following predefined program names (not case-sensitive), or another program name (case-sensitive) that you find in the log output:	
	`rip`	Routing Information Protocol (RIP)
	`ripng`	Routing Information Protocol - next generation (RIPng)
	`ospf`	Open Shortest Path First (OSPF)
	`ospfv3`	Open Shortest Path First (OSPF) version 3 (OSPFv3)
	`bgp`	Border Gateway Protocol (BGP)
	`rsvp`	Resource Reservation Protocol (RSVP)
	`pim-sm`	Protocol Independent Multicast - Sparse Mode (PIM-SM)

Parameter	Description	
	`pim-smv6`	PIM-SM version 6 (PIM-SMv6)
	`lacp`	Link Aggregation Control Protocol (LACP)
	`stp`	Spanning Tree Protocol (STP)
	`rstp`	Rapid Spanning Tree Protocol (RSTP)
	`mstp`	Multiple Spanning Tree Protocol (MSTP)
	`imi`	Integrated Management Interface (IMI)
	`imish`	Integrated Management Interface Shell (IMISH)
`facility`	Filter messages by syslog facility.	
<facility>	Specify one of the following syslog facilities to include messages from:	
	`kern`	Kernel messages
	`user`	Random user-level messages
	`mail`	Mail system
	`daemon`	System daemons
	`auth`	Security/authorization messages
	`syslog`	Messages generated internally by syslogd
	`lpr`	Line printer subsystem
	`news`	Network news subsystem
	`uucp`	UUCP subsystem
	`cron`	Clock daemon
	`authpriv`	Security/authorization messages (private)
	`ftp`	FTP daemon
`msgtext`	Select messages containing a certain text string.	
<text-string>	A text string to match (maximum 128 characters). This is case sensitive, and must be the last text on the command line.	

Mode Global Configuration

Examples To create a filter to send all messages containing the text “Bridging initialization”, to a remote syslog server with IP address 10.32.16.21, use the following commands:

```
awplus# configure terminal
awplus(config)# log host 10.32.16.21 msgtext "Bridging initialization"
```

To create a filter to send messages with a severity level of **informational** and above to the syslog server with IP address 10.32.16.21, use the following commands:

```
awplus# configure terminal
awplus(config)# log host 10.32.16.21 level informational
```

To remove a filter that sends all messages containing the text “Bridging initialization”, to a remote syslog server with IP address 10.32.16.21, use the following commands:

```
awplus# configure terminal
awplus(config)# no log host 10.32.16.21 msgtext "Bridging
initialization"
```

To remove a filter that sends messages with a severity level of **informational** and above to the syslog server with IP address 10.32.16.21, use the following commands:

```
awplusawpluls# configure terminal
awplus(config)# no log host 10.32.16.21 level informational
```

Related Commands

default log host

log host

log host exclude

log host source

log host time

show log config

log host exclude

Overview Use this command to prevent specified log messages from being sent to the remote syslog server, when log host is enabled. You can exclude messages on the basis of:

- the priority/severity of the message
- the program that generated the message
- the logging facility used
- a sub-string within the message, or
- a combination of some or all of these.

Use the **no** variant of this command to stop excluding the specified messages.

Syntax

```
log host exclude [level <level>] [program <program-name>]
[facility <facility>] [msgtext <text-string>]
```

```
no log host exclude [level <level>] [program <program-name>]
[facility <facility>] [msgtext <text-string>]
```

Parameter	Description	
`level`	Exclude messages of the specified severity level.	
<level>	The severity level to exclude. The level can be specified as one of the following numbers or level names, where 0 is the highest severity and 7 is the lowest severity:	
	`0|emergencies`	System is unusable
	`1|alerts`	Action must be taken immediately
	`2|critical`	Critical conditions
	`3|errors`	Error conditions
	`4|warnings`	Warning conditions
	`5|notices`	Normal, but significant, conditions
	`6|informational`	Informational messages
	`7|debugging`	Debug-level messages
`program`	Exclude messages from a specified program.	
<program-name>	The name of a program. Either one of the following predefined program names (not case-sensitive), or another program name (case-sensitive) that you find in the log output.	
	`rip`	Routing Information Protocol (RIP)
	`ripng`	Routing Information Protocol - next generation (RIPng)
	`ospf`	Open Shortest Path First (OSPF)
	`ospfv3`	Open Shortest Path First (OSPF) version 3 (OSPFv3)
	`bgp`	Border Gateway Protocol (BGP)

Parameter	Description	
	`rsvp`	Resource Reservation Protocol (RSVP)
	`pim-sm`	Protocol Independent Multicast - Sparse Mode (PIM-SM)
	`pim-smv6`	PIM-SM version 6 (PIM-SMv6)
	`lacp`	Link Aggregation Control Protocol (LACP)
	`stp`	Spanning Tree Protocol (STP)
	`rstp`	Rapid Spanning Tree Protocol (RSTP)
	`mstp`	Multiple Spanning Tree Protocol (MSTP)
	`imi`	Integrated Management Interface (IMI)
	`imish`	Integrated Management Interface Shell (IMISH)
`facility`	Exclude messages from a syslog facility.	
<facility>	Specify one of the following syslog facilities to exclude messages from:	
	`kern`	Kernel messages
	`user`	Random user-level messages
	`mail`	Mail system
	`daemon`	System daemons
	`auth`	Security/authorization messages
	`syslog`	Messages generated internally by syslogd
	`lpr`	Line printer subsystem
	`news`	Network news subsystem
	`uucp`	UUCP subsystem
	`cron`	Clock daemon
	`authpriv`	Security/authorization messages (private)
	`ftp`	FTP daemon
`msgtext`	Exclude messages containing a certain text string.	
<text-string>	A text string to match (maximum 128 characters). This is case sensitive, and must be the last text on the command line.	

Default No log messages are excluded

Mode Global configuration

Example To remove messages that contain the string “example of irrelevant message”, use the following commands:

```
awplus# configure terminal
awplus(config)# log host exclude msgtext example of irrelevant message
```

Related Commands

default log host

log host

log host (filter)

log host source

log host time

show log config

log host source

Overview Use this command to specify a source interface or IP address for the device to send syslog messages from. You can specify any one of an interface name, an IPv4 address or an IPv6 address.

This is useful if the device can reach the syslog server via multiple interfaces or addresses and you want to control which interface/address the device uses.

Use the **no** variant of this command to stop specifying a source interface or address.

Syntax

```
log host source {<interface-name>|<ipv4-addr>|<ipv6-addr>}
no log host source
```

Parameter	Description
<interface-name>	Specify the source interface name. You can enter a VLAN, eth interface or loopback interface.
<ipv4-add>	Specify the source IPv4 address, in dotted decimal notation (A.B.C.D).
<ipv6-add>	Specify the source IPv6 address, in X:X::X:X notation.

Default None (no source is configured)

Mode Global Configuration

Example To send syslog messages from 192.168.1.1, use the commands:

```
awplus# configure terminal
awplus(config)# log host source 192.168.1.1
```

Related Commands

default log host

log host

log host (filter)

log host exclude

log host time

show log config

log host time

Overview This command configures the time used in messages sent to a remote syslog server. If the syslog server is in a different time zone to your device then the time offset can be configured using either the **utc-offset** parameter option keyword or the **local-offset** parameter option keyword, where **utc-offset** is the time difference from UTC (Universal Time, Coordinated) and **local-offset** is the difference from local time.

Syntax

```
log host <email-address> time {local|local-offset|utc-offset
{plus|minus} <0-24>}
```

Parameter	Description
<email-address>	The email address to send log messages to
`time`	Specify the time difference between the email recipient and the device you are configuring.
`local`	The device is in the same time zone as the email recipient
`local-offset`	The device is in a different time zone to the email recipient. Use the **plus** or **minus** keywords and specify the difference (offset) from local time of the device to the email recipient in hours.
`utc-offset`	The device is in a different time zone to the email recipient. Use the **plus** or **minus** keywords and specify the difference (offset) from UTC time of the device to the email recipient in hours.
`plus`	Negative offset (difference) from the device to the syslog server.
`minus`	Positive offset (difference) from the device to the syslog server.
<0-24>	World Time zone offset in hours

Default The default is **local** time.

Mode Global Configuration

Usage Use the **local** option if the remote syslog server is in the same time zone as the device. Messages will display the time as on the local device when the message was generated.

Use the **offset** option if the email recipient is in a different time zone to this device. Specify the time offset of the remote syslog server in hours. Messages will display the time they were generated on this device but converted to the time zone of the remote syslog server.

Examples To send messages to the remote syslog server with the IP address `10.32.16.21` in the same time zone as the device's local time zone, use the following commands:

```
awplus# configure terminal
awplus(config)# log host 10.32.16.21 time local 0
```

To send messages to the remote syslog server with the IP address 10.32.16.12 with the time information converted to the time zone of the remote syslog server, which is 3 hours ahead of the device's local time zone, use the following commands:

```
awplus# configure terminal
awplus(config)# log host 10.32.16.12 time local-offset plus 3
```

To send messages to the remote syslog server with the IP address 10.32.16.02 with the time information converted to the time zone of the email recipient, which is 3 hours behind the device's UTC time zone, use the following commands:

```
awplus# configure terminal
awplus(config)# log host 10.32.16.02 time utc-offset minus 3
```

Related Commands

default log host

log host

log host (filter)

log host exclude

log host source

show log config

log monitor (filter)

Overview This command creates a filter to select messages to be sent to the terminal when the terminal monitor command is given. Selection can be based on the priority/severity of the message, the program that generated the message, the logging facility used, a sub-string within the message or a combination of some or all of these.

Syntax

```
log monitor [level <level>] [program <program-name>] [facility
<facility>] [msgtext <text-string>]

no log monitor [level <level>] [program <program-name>]
[facility <facility>] [msgtext <text-string>]
```

Parameter	Description	
`level`	Filter messages by severity level.	
<level>	The minimum severity of message to send. The level can be specified as one of the following numbers or level names, where 0 is the highest severity and 7 is the lowest severity:	
	`0|emergencies`	System is unusable
	`1|alerts`	Action must be taken immediately
	`2|critical`	Critical conditions
	`3|errors`	Error conditions
	`4|warnings`	Warning conditions
	`5|notices`	Normal, but significant, conditions
	`6|informational`	Informational messages
	`7|debugging`	Debug-level messages
`program`	Filter messages by program. Include messages from a specified program.	
<program-name>	The name of a program to log messages from, either one of the following predefined program names (not case-sensitive), or another program name (case-sensitive) that you find in the log output:	
	`rip`	Routing Information Protocol (RIP)
	`ripng`	Routing Information Protocol - next generation (RIPng)
	`ospf`	Open Shortest Path First (OSPF)
	`ospfv3`	Open Shortest Path First (OSPF) version 3 (OSPFv3)
	`bgp`	Border Gateway Protocol (BGP)
	`rsvp`	Resource Reservation Protocol (RSVP)
	`pim-sm`	Protocol Independent Multicast - Sparse Mode (PIM-SM)
	`pim-smv6`	PIM-SM version 6 (PIM-SMv6)
	`lacp`	Link Aggregation Control Protocol (LACP)

Parameter	Description	
	`stp`	Spanning Tree Protocol (STP)
	`rstp`	Rapid Spanning Tree Protocol (RSTP)
	`mstp`	Multiple Spanning Tree Protocol (MSTP)
	`imi`	Integrated Management Interface (IMI)
	`imish`	Integrated Management Interface Shell (IMISH)
`facility`	Filter messages by syslog facility.	
<facility>	Specify one of the following syslog facilities to include messages from:	
	`kern`	Kernel messages
	`user`	Random user-level messages
	`mail`	Mail system
	`daemon`	System daemons
	`auth`	Security/authorization messages
	`syslog`	Messages generated internally by syslogd
	`lpr`	Line printer subsystem
	`news`	Network news subsystem
	`uucp`	UUCP subsystem
	`cron`	Clock daemon
	`authpriv`	Security/authorization messages (private)
	`ftp`	FTP daemon
`msgtext`	Select messages containing a certain text string.	
<text-string>	A text string to match (maximum 128 characters). This is case sensitive, and must be the last text on the command line.	

Default By default there is a filter to select all messages. This filter may be removed and replaced by filters that are more selective.

Mode Global Configuration

Examples To create a filter to send all messages that are generated by authentication and have a severity of **info** or higher to terminal instances where the terminal monitor command has been given, use the following commands:

```
awplus# configure terminal
awplus(config)# log monitor level info program auth
```

To remove a default filter that includes sending everything to the terminal, use the following commands:

```
awplus# configure terminal
awplus(config)# no log monitor level debugging
```

Related Commands

default log monitor

log monitor exclude

show log config

terminal monitor

log monitor exclude

Overview Use this command to prevent specified log messages from being displayed on a terminal, when terminal monitor is enabled. You can exclude messages on the basis of:

- the priority/severity of the message
- the program that generated the message
- the logging facility used
- a sub-string within the message, or
- a combination of some or all of these.

Use the **no** variant of this command to stop excluding the specified messages.

Syntax

```
log console exclude [level <level>] [program <program-name>]
[facility <facility>] [msgtext <text-string>]
```

```
no log console exclude [level <level>] [program <program-name>]
[facility <facility>] [msgtext <text-string>]
```

Parameter	Description	
`level`	Exclude messages of the specified severity level.	
<level>	The severity level to exclude. The level can be specified as one of the following numbers or level names, where 0 is the highest severity and 7 is the lowest severity:	
	`0|emergencies`	System is unusable
	`1|alerts`	Action must be taken immediately
	`2|critical`	Critical conditions
	`3|errors`	Error conditions
	`4|warnings`	Warning conditions
	`5|notices`	Normal, but significant, conditions
	`6|informational`	Informational messages
	`7|debugging`	Debug-level messages
`program`	Exclude messages from a specified program.	
<program-name>	The name of a program. Either one of the following predefined program names (not case-sensitive), or another program name (case-sensitive) that you find in the log output.	
	`rip`	Routing Information Protocol (RIP)
	`ripng`	Routing Information Protocol - next generation (RIPng)
	`ospf`	Open Shortest Path First (OSPF)
	`ospfv3`	Open Shortest Path First (OSPF) version 3 (OSPFv3)
	`bgp`	Border Gateway Protocol (BGP)

Parameter	Description	
	`rsvp`	Resource Reservation Protocol (RSVP)
	`pim-dm`	Protocol Independent Multicast - Dense Mode (PIM-DM)
	`pim-sm`	Protocol Independent Multicast - Sparse Mode (PIM-SM)
	`pim-smv6`	PIM-SM version 6 (PIM-SMv6)
	`stp`	Spanning Tree Protocol (STP)
	`rstp`	Rapid Spanning Tree Protocol (RSTP)
	`mstp`	Multiple Spanning Tree Protocol (MSTP)
	`imi`	Integrated Management Interface (IMI)
	`imish`	Integrated Management Interface Shell (IMISH)
`facility`	Exclude messages from a syslog facility.	
<facility>	Specify one of the following syslog facilities to exclude messages from:	
	`kern`	Kernel messages
	`user`	Random user-level messages
	`mail`	Mail system
	`daemon`	System daemons
	`auth`	Security/authorization messages
	`syslog`	Messages generated internally by syslogd
	`lpr`	Line printer subsystem
	`news`	Network news subsystem
	`uucp`	UUCP subsystem
	`cron`	Clock daemon
	`authpriv`	Security/authorization messages (private)
	`ftp`	FTP daemon
`msgtext`	Exclude messages containing a certain text string.	
<text-string>	A text string to match (maximum 128 characters). This is case sensitive, and must be the last text on the command line.	

Default No log messages are excluded

Mode Global configuration

Example To remove messages that contain the string “example of irrelevant message”, use the following commands:

```
awplus# configure terminal
awplus(config)# log monitor exclude msgtext example of
irrelevant message
```

Related Commands

default log monitor

log monitor (filter)

show log config

terminal monitor

log permanent

Overview This command configures the device to send permanent log messages to non-volatile storage (NVS) on the device. The content of the permanent log is retained over a reboot. Once the permanent log reaches its configured maximum allowable size old messages will be deleted to make way for new messages.

The **no** variant of this command configures the device not to send any messages to the permanent log. Log messages will not be retained over a restart.

Syntax

```
log permanent
no log permanent
```

Mode Global Configuration

Examples To enable permanent logging use the following commands:

```
awplus# configure terminal
awplus(config)# log permanent
```

To disable permanent logging use the following commands:

```
awplus# configure terminal
awplus(config)# no log permanent
```

Related Commands

clear log permanent

copy permanent-log

default log permanent

log permanent (filter)

log permanent exclude

log permanent size

show log config

show log permanent

log permanent (filter)

Overview This command creates a filter to select messages to be sent to the permanent log. Selection can be based on the priority/ severity of the message, the program that generated the message, the logging facility used, a sub-string within the message or a combination of some or all of these.

The **no** variant of this command removes the corresponding filter, so that the specified messages are no longer sent to the permanent log.

Syntax

```
log permanent [level <level>] [program <program-name>]
[facility <facility>] [msgtext <text-string>]
```

```
no log permanent [level <level>] [program <program-name>]
[facility <facility>] [msgtext <text-string>]
```

Parameter	Description	
`level`	Filter messages sent to the permanent log by severity level.	
<level>	The minimum severity of message to send. The level can be specified as one of the following numbers or level names, where 0 is the highest severity and 7 is the lowest severity:	
	`0|emergencies`	System is unusable
	`1|alerts`	Action must be taken immediately
	`2|critical`	Critical conditions
	`3|errors`	Error conditions
	`4|warnings`	Warning conditions
	`5|notices`	Normal, but significant, conditions
	`6|informational`	Informational messages
	`7|debugging`	Debug-level messages
`program`	Filter messages by program. Include messages from a specified program.	
<program-name>	The name of a program to log messages from, either one of the following predefined program names (not case-sensitive), or another program name (case-sensitive) that you find in the log output:	
	`rip`	Routing Information Protocol (RIP)
	`ripng`	Routing Information Protocol - next generation (RIPng)
	`ospf`	Open Shortest Path First (OSPF)
	`ospfv3`	Open Shortest Path First (OSPF) version 3 (OSPFv3)
	`bgp`	Border Gateway Protocol (BGP)
	`rsvp`	Resource Reservation Protocol (RSVP)
	`pim-sm`	Protocol Independent Multicast - Sparse Mode (PIM-SM)
	`pim-smv6`	PIM-SM version 6 (PIM-SMv6)

Parameter	Description	
	`lacp`	Link Aggregation Control Protocol (LACP)
	`stp`	Spanning Tree Protocol (STP)
	`rstp`	Rapid Spanning Tree Protocol (RSTP)
	`mstp`	Multiple Spanning Tree Protocol (MSTP)
	`imi`	Integrated Management Interface (IMI)
	`imish`	Integrated Management Interface Shell (IMISH)
`facility`	Filter messages by syslog facility.	
<facility>	Specify one of the following syslog facilities to include messages from:	
	`kern`	Kernel messages
	`user`	Random user-level messages
	`mail`	Mail system
	`daemon`	System daemons
	`auth`	Security/authorization messages
	`syslog`	Messages generated internally by syslogd
	`lpr`	Line printer subsystem
	`news`	Network news subsystem
	`uucp`	UUCP subsystem
	`cron`	Clock daemon
	`authpriv`	Security/authorization messages (private)
	`ftp`	FTP daemon
`msgtext`	Select messages containing a certain text string.	
<text-string>	A text string to match (maximum 128 characters). This is case sensitive, and must be the last text on the command line.	

Default By default the buffered log has a filter to select messages whose severity level is `notices (5)` or higher. This filter may be removed using the **no** variant of this command.

Mode Global Configuration

Examples To create a filter to send all messages containing the text "`Bridging initialization`", to the permanent log use the following commands:

```
awplus# configure terminal
awplus(config)# log permanent msgtext Bridging initialization
```

Related Commands clear log permanent

default log permanent

log permanent

log permanent exclude

log permanent size

show log config

show log permanent

log permanent exclude

Overview Use this command to prevent specified log messages from being sent to the permanent log. You can exclude messages on the basis of:

- the priority/severity of the message
- the program that generated the message
- the logging facility used
- a sub-string within the message, or
- a combination of some or all of these.

Use the **no** variant of this command to stop excluding the specified messages.

Syntax

```
log permanent exclude [level <level>] [program <program-name>]
[facility <facility>] [msgtext <text-string>]

no log permanent exclude [level <level>] [program
<program-name>] [facility <facility>] [msgtext <text-string>]
```

Parameter	Description	
`level`	Exclude messages of the specified severity level.	
<level>	The severity level to exclude. The level can be specified as one of the following numbers or level names, where 0 is the highest severity and 7 is the lowest severity:	
	`0|emergencies`	System is unusable
	`1|alerts`	Action must be taken immediately
	`2|critical`	Critical conditions
	`3|errors`	Error conditions
	`4|warnings`	Warning conditions
	`5|notices`	Normal, but significant, conditions
	`6|informational`	Informational messages
	`7|debugging`	Debug-level messages
`program`	Exclude messages from a specified program.	
<program-name>	The name of a program. Either one of the following predefined program names (not case-sensitive), or another program name (case-sensitive) that you find in the log output.	
	`rip`	Routing Information Protocol (RIP)
	`ripng`	Routing Information Protocol - next generation (RIPng)
	`ospf`	Open Shortest Path First (OSPF)
	`ospfv3`	Open Shortest Path First (OSPF) version 3 (OSPFv3)
	`bgp`	Border Gateway Protocol (BGP)
	`rsvp`	Resource Reservation Protocol (RSVP)

Parameter	Description	
	`pim-sm`	Protocol Independent Multicast - Sparse Mode (PIM-SM)
	`pim-smv6`	PIM-SM version 6 (PIM-SMv6)
	`lacp`	Link Aggregation Control Protocol (LACP)
	`stp`	Spanning Tree Protocol (STP)
	`rstp`	Rapid Spanning Tree Protocol (RSTP)
	`mstp`	Multiple Spanning Tree Protocol (MSTP)
	`imi`	Integrated Management Interface (IMI)
	`imish`	Integrated Management Interface Shell (IMISH)
`facility`	Exclude messages from a syslog facility.	
<facility>	Specify one of the following syslog facilities to exclude messages from:	
	`kern`	Kernel messages
	`user`	Random user-level messages
	`mail`	Mail system
	`daemon`	System daemons
	`auth`	Security/authorization messages
	`syslog`	Messages generated internally by syslogd
	`lpr`	Line printer subsystem
	`news`	Network news subsystem
	`uucp`	UUCP subsystem
	`cron`	Clock daemon
	`authpriv`	Security/authorization messages (private)
	`ftp`	FTP daemon
`msgtext`	Exclude messages containing a certain text string.	
<text-string>	A text string to match (maximum 128 characters). This is case sensitive, and must be the last text on the command line.	

Default No log messages are excluded

Mode Global configuration

Example To remove messages that contain the string “example of irrelevant message”, use the following commands:

```
awplus# configure terminal
awplus(config)# log permanent exclude msgtext example of
irrelevant message
```

Related Commands clear log permanent

default log permanent

log permanent

log permanent (filter)

log permanent size

show log config

show log permanent

log permanent size

Overview This command configures the amount of memory that the permanent log is permitted to use. Once this memory allocation has been filled old messages will be deleted to make room for new messages.

Syntax

```
log permanent size <50-250>
```

Parameter	Description
<50-250>	Size of the permanent log in kilobytes

Mode Global Configuration

Example To allow the permanent log to use up to 100 kB of NVS use the following commands:

```
awplus# configure terminal
awplus(config)# log permanent size 100
```

Related Commands

clear log permanent

copy permanent-log

default log permanent

log permanent

log permanent (filter)

log permanent exclude

show log config

show log permanent

log-rate-limit nsm

Overview This command limits the number of log messages generated by the device for a given interval.

Use the **no** variant of this command to revert to the default number of log messages generated by the device of up to 200 log messages per second.

Syntax

```
log-rate-limit nsm messages <message-limit> interval
<time-interval>
```

```
no log-rate-limit nsm
```

Parameter	Description
<message-limit>	<1-65535> The number of log messages generated by the device.
<time-interval>	<0-65535> The time period for log message generation in 1/100 seconds. If an interval of 0 is specified then no log message rate limiting is applied.

Default By default, the device will allow 200 log messages to be generated per second.

Mode Global Configuration

Usage Previously, if the device received a continuous stream of IGMP packets with errors, such as when a packet storm occurs because of a network loop, then the device generates a lot of log messages using more and more memory, which may ultimately cause the device to shutdown. This log rate limiting feature constrains the rate that log messages are generated by the device.

Note that if within the given time interval, the number of log messages exceeds the limit, then any excess log messages are discarded. At the end of the time interval, a single log message is generated indicating that log messages were discarded due to the log rate limit being exceeded.

Thus if the expectation is that there will be a lot of discarded log messages due to log rate limiting, then it is advisable to set the time interval to no less than 100, which means that there would only be one log message, indicating log excessive log messages have been discarded.

Examples To limit the device to generate up to 300 log messages per second, use the following commands:

```
awplus# configure terminal
```

```
awplus(config)# log-rate-limit nsm messages 300 interval 100
```

To return the device the default setting, to generate up to 200 log messages per second, use the following commands:

```
awplus# configure terminal
awplus(config)# no log-rate-limit nsm
```

log trustpoint

Overview This command adds one or more trustpoints to be used with the syslog application. Multiple trustpoints may be specified, or the command may be executed multiple times, to add multiple trustpoints to the application.

The **no** version of this command removes one or more trustpoints from the list of trustpoints associated with the application.

Syntax

```
log trustpoint [<trustpoint-list>]
no log trustpoint [<trustpoint-list>]
```

Parameter	Description
<trustpoint-list>	Specify one or more trustpoints to be added or deleted.

Default No trustpoints are created by default.

Mode Global Configuration

Usage The device certificate associated with first trustpoint added to the application will be transmitted to remote servers. The certificate received from the remote server must have an issuer chain that terminates with the root CA certificate for any of the trustpoints that are associated with the application.

If no trustpoints are specified in the command, the trustpoint list will be unchanged.

If **no log trustpoint** is issued without specifying any trustpoints, then all trustpoints will be disassociated from the application.

Example You can add multiple trustpoints by executing the command multiple times:

```
awplus# configure terminal
awplus(config)# log trustpoint trustpoint_1
awplus(config)# log trustpoint trustpoint_2
```

Alternatively, add multiple trustpoints with a single command:

```
awplus(config)# log trustpoint trustpoint_2 trustpoint_3
```

Disassociate all trustpoints from the syslog application using the command:

```
awplus(config)# log trustpoint trustpoint_2 trustpoint_3
```

Related Commands log host

show log config

log url-requests

Overview If URL Filtering is enabled, then by default, black list hits and issues with match criteria and list files are logged.

Use this command to enable logging of all HTTP and HTTPS URL requests (both permitted and denied) passing through the firewall.

Use the **no** variant of this command to disable extra logging of HTTP and HTTPS URL requests passing through the firewall.

Syntax

```
log url-requests
no log url-requests
```

Default Disabled by default.

Mode URL Filter Configuration

Usage When enabled, additional log messages for HTTP and HTTPS URL requests passing through the firewall contain the:

- URL being accessed
- IP address of the user that requested the URL

Example To configure logging of all HTTP and HTTPS URL requests passing through the firewall (permitted as well as denied), use the following commands:

```
awplus# configure terminal
awplus(config)# url-filter
awplus(config-url-filter)# log url-requests
```

Related Commands url-filter

Command changes Version 5.4.7-1.1: command added

show connection-log events

Overview This command displays the configuration state (enabled or disabled) for the logging of connections passing through the firewall, as configured by the connection-log events command.

Syntax
```
show connection-log events
```

Mode User Exec

Example To show the logging configuration state for the connections passing through the firewall, use the command:

```
awplus# show connection-log events
```

Output Figure 7-1: Example output from **show connection-log events**

```
awplus#show connection-log events
Log new connection events:    Disabled
Log connection end events:    Enabled
```

Related Commands connection-log events

Command changes Version 5.4.7-1.1: command added.

show counter log

Overview This command displays log counter information.

Syntax

```
show counter log
```

Mode User Exec and Privileged Exec

Example To display the log counter information, use the command:

```
awplus# show counter log
```

Output Figure 7-2: Example output from the **show counter log** command

```
Log counters
Total Received        ......... 2328
Total Received P0     ......... 0
Total Received P1     ......... 0
Total Received P2     ......... 1
Total Received P3     ......... 9
Total Received P4     ......... 32
Total Received P5     ......... 312
Total Received P6     ......... 1602
Total Received P7     ......... 372
```

Table 8: Parameters in output of the **show counter log** command

Parameter	Description
Total Received	Total number of messages received by the log
Total Received P0	Total number of Priority 0 (Emergency) messages received
Total Received P1	Total number of Priority 1 (Alert) messages received
Total Received P2	Total number of Priority 2 (Critical) messages received
Total Received P3	Total number of Priority 3 (Error) messages received
Total Received P4	Total number of Priority 4 (Warning) messages received
Total Received P5	Total number of Priority 5 (Notice) messages received
Total Received P6	Total number of Priority 6 (Info) messages received
Total Received P7	Total number of Priority 7 (Debug) messages received

Related Commands show log config

show exception log

Overview This command displays the contents of the exception log.

Syntax

```
show exception log
```

Mode User Exec and Privileged Exec

Example To display the exception log, use the command:

```
awplus# show exception log
```

Output Figure 7-3: Example output from the **show exception log** command on a device

```
awplus#show exception log
<date> <time> <facility>.<severity> <program[<pid>]>: <message>
------------------------------------------------------------------------
2017 Jul 19 05:14:16 local7.debug awplus corehandler : Process hsl (PID:745) sig
nal 11, core dumped to /flash/hsl-IE200-test_2017_07-20170718-1-2-1500441256-1
227.tgz
------------------------------------------------------------------------
```

show log

Overview This command displays the contents of the buffered log.

For information on filtering and saving command output, see the "Getting Started with AlliedWare_Plus" Feature Overview and Configuration Guide.

Syntax

```
show log [tail [<10-250>]]
```

Parameter	Description
`tail`	Display only the latest log entries.
<10-250>	Specify the number of log entries to display.

Default By default the entire contents of the buffered log is displayed.

Mode User Exec, Privileged Exec and Global Configuration

Usage If the optional **tail** parameter is specified, only the latest 10 messages in the buffered log are displayed. A numerical value can be specified after the **tail** parameter to select how many of the latest messages should be displayed.

The **show log** command is only available to users at privilege level 7 and above. To set a user's privilege level, use the command:

```
awplus(config)# username <name> privilege <1-15>
```

Examples To display the contents of the buffered log use the command:

```
awplus# show log
```

To display the 10 latest entries in the buffered log use the command:

```
awplus# show log tail 10
```

Output Figure 7-4: Example output from **show log**

```
awplus#show log

<date> <time> <facility>.<severity> <program[<pid>]>: <message>

------------------------------------------------------------------------
2011 Aug 29 07:55:22 kern.notice awplus kernel: Linux version 2.6.32.12-at1 (mak
er@awpmaker03-dl) (gcc version 4.3.3 (Gentoo 4.3.3-r3 p1.2, pie-10.1.5) ) #1 Wed
 Dec 8 11:53:40 NZDT 2010
2011 Aug 29 07:55:22 kern.warning awplus kernel: No pci config register base in
dev tree, using default
2011 Aug 29 07:55:23 kern.notice awplus kernel: Kernel command line: console=tty
S0,9600 releasefile=AR2050V-5.4.7-1.1.rel ramdisk=14688 bootversion=1.1.0-rc12
loglevel=1 extraflash=00000000
2011 Aug 29 07:55:25 kern.notice awplus kernel: RAMDISK: squashfs filesystem fou
nd at block 0
2011 Aug 29 07:55:28 kern.warning awplus kernel: ipifwd: module license 'Proprie
tary' taints kernel.
...
```

Related Commands

clear log buffered

copy buffered-log

default log buffered

log buffered

log buffered (filter)

log buffered size

log buffered exclude

show log config

show log config

Overview This command displays information about the logging system. This includes the configuration of the various log destinations, such as buffered, permanent, syslog servers (hosts) and email addresses. This also displays the latest status information for each log destination.

Syntax

```
show log config
```

Mode User Exec, Privileged Exec and Global Configuration

Example To display the logging configuration use the command:

```
awplus# show log config
```

Output Figure 7-5: Example output from **show log config**

```
Facility: default

PKI trustpoints: example_trustpoint

Buffered log:
 Status ......... enabled
  Maximum size ... 100kb
  Filters:
 *1 Level ........ notices
    Program ...... any
    Facility ..... any
    Message text . any
  2 Level ........ informational
    Program ...... auth
    Facility ..... daemon
    Message text . any
  Statistics ..... 1327 messages received, 821 accepted by filter (2016 Oct 11
10:36:16)
Permanent log:
  Status ......... enabled
  Maximum size ... 60kb
  Filters:
  1 Level ........ error
    Program ...... any
    Facility ..... any
    Message text . any
 *2 Level ........ warnings
    Program ...... dhcp
    Facility ..... any
    Message text . "pool exhausted"
  Statistics ..... 1327 messages received, 12 accepted by filter (2016 Oct 11
10:36:16)
```

```
Host 10.32.16.21:
  Time offset .... +2:00
  Offset type .... UTC
  Source ......... -
  Secured ........ enabled
  Filters:
  1 Level ........ critical
    Program ...... any
    Facility ..... any
    Message text . any
  Statistics ..... 1327 messages received, 1 accepted by filter (2016 Oct 11
10:36:16)
Email admin@alliedtelesis.com:
  Time offset .... +0:00
  Offset type .... Local
  Filters:
  1 Level ........ emergencies
    Program ...... any
    Facility ..... any
    Message text . any
  Statistics ..... 1327 messages received, 0 accepted by filter (2016 Oct 11
10:36:16)
...
```

In the above example the '*' next to filter 1 in the buffered log configuration indicates that this is the default filter. The permanent log has had its default filter removed, so none of the filters are marked with '*'.

NOTE: *Terminal log and console log cannot be set at the same time. If console logging is enabled then the terminal logging is turned off.*

Related Commands

show counter log

show log

show log permanent

show log external

Overview Use this command to display the contents of the external log, which is stored on a USB storage device.

Syntax

```
show log external [tail [<10-250>]]
```

Parameter	Description
`tail`	Display only the latest log entries.
<10-250>	Specify the number of log entries to display.

Mode Global Configuration

Privileged Exec

User Exec

Usage If the optional **tail** parameter is specified, only the latest 10 messages in the permanent log are displayed. A numerical value can be specified after the **tail** parameter to change how many of the latest messages should be displayed.

Example To display the last 5 entries in the external log, use the command:

```
awplus# show log external tail 5
```

Related Commands

clear log external

default log external

log external

log external (filter)

log external exclude

log external rotate

log external size

show log config

unmount

Command changes Version 5.4.7-1.1: command added

show log permanent

Overview This command displays the contents of the permanent log.

Syntax

```
show log permanent [tail [<10-250>]]
```

Parameter	Description
`tail`	Display only the latest log entries.
<10-250>	Specify the number of log entries to display.

Usage If the optional **tail** parameter is specified only, the latest 10 messages in the permanent log are displayed. A numerical value can be specified after the **tail** parameter to change how many of the latest messages should be displayed.

Mode User Exec, Privileged Exec and Global Configuration

Example To display the permanent log, use the command:

```
awplus# show log permanent
```

Output Figure 7-6: Example output from **show log permanent**

```
awplus#show log permanent

<date> <time> <facility>.<severity> <program[<pid>]>: <message>
------------------------------------------------------------------------
2014 Jun 10 09:30:09 syslog.notice syslog-ng[67]: syslog-ng starting up;
version=\'2.0rc3\'
2014 Jun 10 09:30:09 auth.warning portmap[106]: user rpc not found, reverting to
user bin
2014 Jun 10 09:30:09 cron.notice crond[116]: crond 2.3.2 dillon, started, log
level 8
2014 Jun 10 09:30:14 daemon.err snmpd[181]: /flash/.configs/snmpd.conf: line 20:
Error: bad SUBTREE object
2014 Jun 10 09:30:14 user.info HSL[192]: HSL: INFO: Registering port port1.0.1
```

Related Commands

clear log permanent

copy permanent-log

default log permanent

log permanent

log permanent (filter)

log permanent exclude

log permanent size

show log config

show running-config log

Overview This command displays the current running configuration of the Log utility.

Syntax

```
show running-config log
```

Mode Privileged Exec and Global Configuration

Example To display the current configuration of the log utility, use the command:

```
awplus# show running-config log
```

Related Commands show log

show log config

unmount

Overview Use this command to unmount an external storage device. We recommend you unmount storage devices before removing them, to avoid file corruption. This is especially important if files may be automatically written to the storage device, such as external log files or AMF backup files.

Syntax

```
unmount usb
```

Parameter	Description
`usb`	Unmount the USB storage device.

Mode Privileged Exec

Example To unmount a USB storage device and safely remove it from the device, use the command:

```
awplus# unmount usb
```

Related Commands

clear log external

log external

show file systems

show log config

show log external

Command changes Version 5.4.7-1.1: command added

8 Scripting Commands

Introduction

Overview This chapter provides commands used for command scripts.

Command List

- "activate" on page 365
- "echo" on page 366
- "wait" on page 367

activate

Overview This command activates a script file.

Syntax `activate [background] <script>`

Parameter	Description
`background`	Activate a script to run in the background. A process that is running in the background will operate as a separate task, and will not interrupt foreground processing. Generally, we recommend running short, interactive scripts in the foreground and longer scripts in the background. The default is to run the script in the foreground.
<script>	The file name of the script to activate. The script is a command script consisting of commands documented in this software reference. Note that you must use either a **.scp** or a **.sh** filename extension for a valid script text file, as described below in the usage section for this command.

Mode Privileged Exec

Usage When a script is activated, the privilege level is set to 1 enabling User Exec commands to run in the script. If you need to run Privileged Exec commands in your script you need to add an enable (Privileged Exec mode) command to the start of your script. If you need to run Global Configuration commands in your script you need to add a configure terminal command after the **enable** command at the start of your script.

The **activate** command executes the script in a new shell. A terminal length shell command, such as **terminal length 0** may also be required to disable a delay that would pause the display.

A script must be a text file with a filename extension of either **.sh** or **.scp** only for the AlliedWare Plus™ CLI to activate the script file. The **.sh** filename extension indicates the file is an ASH script, and the **.scp** filename extension indicates the file is an AlliedWare Plus™ script.

Examples To activate a command script to run as a background process, use the command:

```
awplus# activate background test.scp
```

Related Commands configure terminal

echo

enable (Privileged Exec mode)

wait

echo

Overview This command echoes a string to the terminal, followed by a blank line.

Syntax

```
echo <line>
```

Parameter	Description
<line>	The string to echo

Mode User Exec and Privileged Exec

Usage This command may be useful in CLI scripts, to make the script print user-visible comments.

Example To echo the string `Hello World` to the console, use the command:

```
awplus# echo Hello World
```

Output

```
Hello World
```

Related Commands activate

wait

wait

Overview This command pauses execution of the active script for the specified period of time.

Syntax

```
wait <delay>
```

Parameter	Description
<delay>	<1-65335> Specify the time delay in seconds

Default No wait delay is specified by default to pause script execution.

Mode Privileged Exec (when executed from a script not directly from the command line)

Usage Use this command to pause script execution in an **.scp** (AlliedWare Plus™ script) or an **.sh** (ASH script) file executed by the activate command. The script must contain an **enable** command, because the **wait** command is only executed in the Privileged Exec mode.

Example See an **.scp** script file extract below that will show port counters for interface port1.0.1 over a 10 second interval:

```
enable

show interface port1.0.1

wait 10

show interface port1.0.1
```

Related Commands

activate

echo

enable (Privileged Exec mode)

9 Interface Commands

Introduction

Overview This chapter provides an alphabetical reference of commands used to configure and display interfaces.

Command List

- "description (interface)" on page 369
- "interface (to configure)" on page 370
- "ip tcp adjust-mss" on page 372
- "ipv6 tcp adjust-mss" on page 374
- "mru jumbo" on page 376
- "mtu" on page 377
- "show interface" on page 379
- "show interface brief" on page 383
- "show interface memory" on page 384
- "show interface status" on page 386
- "shutdown" on page 388

description (interface)

Overview Use this command to add a description to a specific port or interface.

Syntax

```
description <description>
```

Parameter	Description
<description>	Text describing the specific interface. Descriptions can contain any printable ASCII characters (ASCII 32-126).

Mode Interface Configuration

Example The following example uses this command to describe the device that a switch port is connected to.

```
awplus# configure terminal
awplus(config)# interface port1.0.2
awplus(config-if)# description Boardroom PC
```

Command changes Version 5.4.7-1.1: valid character set changed to printable ASCII characters

interface (to configure)

Overview Use this command to select one or more interfaces to configure.

Syntax

```
interface <interface-list>
interface lo
```

Parameter	Description
`<interface-list>`	The interfaces or ports to configure. An interface-list can be: • an interface such as a VLAN (e.g. `vlan1`), a switch port (e.g. `port1.0.1`), a static channel group (e.g. `sa3`), a dynamic (LACP) channel group (e.g. `po4`), a PPP interface (e.g. `ppp0`), an Ethernet interface, (e.g. eth1), a tunnel interface (e.g. tunnel0) or a bridge interface (e.g. br2). • a continuous range of interfaces, ports, static channel groups or dynamic (LACP) channel groups separated by a hyphen; e.g. `vlan2-8`, or `port1.0.1-1.0.6`, or `sa1-2`, or `po1-2` • a comma-separated list of the above; e.g. `port1.0.1,port1.0.4-1.0.6`. Do not mix interface types in a list The specified interfaces must exist.
`lo`	The local loopback interface.

Usage A local loopback interface is one that is always available for higher layer protocols to use and advertise to the network. Although a local loopback interface is assigned an IP address, it does not have the usual requirement of connecting to a lower layer physical entity. This lack of physical attachment creates the perception of a local loopback interface always being accessible via the network.

Local loopback interfaces can be utilized by a number of protocols for various purposes. They can be used to improve access to the device and also increase its reliability, security, scalability and protection. In addition, local loopback interfaces can add flexibility and simplify management, information gathering and filtering.

One example of this increased reliability is for OSPF to advertise a local loopback interface as an interface-route into the network irrespective of the physical links that may be “up” or “down” at the time. This provides a higher probability that the routing traffic will be received and subsequently forwarded.

Mode Global Configuration

Example The following example shows how to enter Interface mode to configure `vlan1`. Note how the prompt changes.

```
awplus# configure terminal
awplus(config)# interface vlan1
awplus(config-if)#
```

The following example shows how to enter Interface mode to configure PPP interface, PPP0.

```
awplus# configure terminal
awplus(config)# interface ppp0
awplus(config-if)#
```

The following example shows how to enter Interface mode to configure the local loopback interface.

```
awplus# configure terminal
awplus(config)# interface lo
awplus(config-if)#
```

The following example shows how to enter interface mode to configure bridge br2.

```
awplus# configure terminal
awplus(config)# interface br2
awplus(config-if)#
```

Related Commands

ip address (IP Addressing and Protocol)

show interface

show interface brief

ip tcp adjust-mss

Overview Use this command to set the Maximum Segment Size (MSS) size for an interface, where MSS is the maximum TCP data packet size that the interface can transmit before fragmentation.

Use the **no** variant of this command to remove a previously specified MSS size for a PPP interface, and restore the default MSS size.

Syntax

```
ip tcp adjust-mss {<mss-size>|pmtu}
no ip tcp adjust-mss
```

Parameter	Description
<mss-size>	<64-1460> Specifies the MSS size in bytes.
pmtu	Adjust TCP MSS automatically with respect to the MTU on the interface.

Default The default setting allows a TCP server or a TCP client to set the MSS value for itself.

Mode Interface Configuration

Usage When a host initiates a TCP session with a server it negotiates the IP segment size by using the MSS option field in the TCP packet. The value of the MSS option field is determined by the Maximum Transmission Unit (MTU) configuration on the host.

You can set a feasible MSS value on the following interfaces:

- PPPoE
- Ethernet
- VTI Tunnels (IPSeC, GRE, IPv6, L2TP, OpenVPN)
- VLAN

Examples To configure an MSS size of 1452 bytes on PPP interface ppp0, use the commands:

```
awplus# configure terminal
awplus(config)# interface ppp0
awplus(config-if)# ip tcp adjust-mss 1452
```

To configure an MSS size of 1452 bytes on Ethernet interface eth1, use the commands:

```
awplus# configure terminal
awplus(config)# interface eth1
awplus(config-if)# ip tcp adjust-mss 1452
```

To restore the MSS size to the default size on PPP interface `ppp0`, use the commands:

```
awplus# configure terminal
awplus(config)# interface ppp0
awplus(config-if)# no ip tcp adjust-mss
```

Related Commands

mtu (PPP)

show interface

show interface (PPP)

show interface tunnel (GRE)

ipv6 tcp adjust-mss

Overview Use this command to set the IPv6 Maximum Segment Size (MSS) size for an interface, where MSS is the maximum TCP data packet size that the interface can transmit before fragmentation.

Use the **no** variant of this command to remove a previously specified MSS size for a PPP interface, and restore the default MSS size.

Syntax

```
ip tcp adjust-mss {<mss-size>|pmtu}
no ip tcp adjust-mss
```

Parameter	Description
<mss-size>	<64-1460> Specifies the MSS size in bytes.
pmtu	Adjust TCP MSS automatically with respect to the MTU on the interface.

Default The default setting allows a TCP server or a TCP client to set the MSS value for itself.

Mode Interface Configuration

Usage When a host initiates a TCP session with a server it negotiates the IP segment size by using the MSS option field in the TCP packet. The value of the MSS option field is determined by the Maximum Transmission Unit (MTU) configuration on the host.

You can set a feasible MSS value on the following interfaces:

- PPPoE
- Ethernet
- VTI Tunnels (IPSec, GRE, IPv6, L2TP, OpenVPN)
- VLAN

Examples To configure an IPv6 MSS size of 1452 bytes on PPP interface ppp0, use the commands:

```
awplus# configure terminal
awplus(config)# interface ppp0
awplus(config-if)# ipv6 tcp adjust-mss 1452
```

To configure an IPv6 MSS size of 1452 bytes on Ethernet interface eth1, use the commands:

```
awplus# configure terminal
awplus(config)# interface eth1
awplus(config-if)# ip tcp adjust-mss 1452
```

To restore the MSS size to the default size on PPP interface `ppp0`, use the commands:

```
awplus# configure terminal
awplus(config)# interface ppp0
awplus(config-if)# no ip tcp adjust-mss
```

Related Commands

mtu (PPP)

show interface

show interface (PPP)

show interface tunnel (GRE)

mru jumbo

Overview Use this command to enable the device to forward jumbo frames. For more information, see the Switching Feature Overview and Configuration Guide.

When jumbo frame support is enabled, the maximum size of packets that the device can forward is 9710 bytes of payload.

Use the no variant of this command to remove jumbo frame support, and restore the default MRU size (1500 bytes) for switch ports.

NOTE:

The figure of 1500 or 9710 bytes specifies the payload only. For an IEEE 802.1q frame, provision is made (internally) for the following additional components:

- Source and Destination addresses
- EtherType field
- Priority and VLAN tag fields
- FCS

These additional components increase the frame size internally (to 1522 bytes in the default case).

Syntax

```
mru jumbo
no mru
```

Default By default, jumbo frame support is not enabled.

Mode Interface Configuration for switch ports.

Usage Note that show interface output will only show MRU size for switch ports.

We recommend limiting the number of ports with jumbo frames support enabled to two.

Examples To enable the device to forward jumbo frames on `port1.0.2`, use the commands:

```
awplus# configure terminal
awplus(config)# interface port1.0.2
awplus(config-if)# mru jumbo
```

To remove the jumbo frame support, and therefore restore the MRU size of 1500 bytes on `port1.0.2`, use the commands:

```
awplus# configure terminal
awplus(config)# interface port1.0.2
awplus(config-if)# no mru
```

Related Commands show interface

mtu

Overview Use this command to set the Maximum Transmission Unit (MTU) size for VLANs, where MTU is the maximum packet size that VLANs can transmit. The MTU size setting is applied to both IPv4 and IPv6 packet transmission.

Use the **no** variant of this command to remove a previously specified Maximum Transmission Unit (MTU) size for VLANs, and restore the default MTU size (1500 bytes) for VLANs.

Syntax

```
mtu <68-1582>
no mtu
```

Default The default MTU size is 1500 bytes for VLAN interfaces.

Mode Interface Configuration for VLAN interfaces.

Usage If a device receives an IPv4 packet for Layer 3 switching to another VLAN with an MTU size smaller than the packet size, and if the packet has the '**don't fragment**' bit set, then the device will send an ICMP '**destination unreachable**' (3) packet type and a '**fragmentation needed and DF set**' (4) code back to the source. For IPv6 packets bigger than the MTU size of the transmitting VLAN interface, an ICMP '**packet too big**' (ICMP type 2 code 0) message is sent to the source.

Note that you cannot configure MTU on bridge interfaces. The MTU of the bridge interface is determined by the member interface of the bridge which has the lowest MTU. For example, if you attach eth1 with MTU 1200, ppp1 with MTU 1400, and vlan1 with MTU 1500 to a bridge interface, the MTU for that interface will be 1200.

Note that show interface output will only show MTU size for VLAN interfaces.

Examples To configure an MTU size of 1500 bytes on interface "vlan2", use the commands:

```
awplus# configure terminal
awplus(config)# interface vlan2
awplus(config-if)# mtu 1500
```

To configure an MTU size of 1500 bytes on interfaces "vlan2" to "vlan4", use the commands:

```
awplus# configure terminal
awplus(config)# interface vlan2-vlan4
awplus(config-if)# mtu 1500
```

To restore the MTU size to the default MTU size of 1500 bytes on "vlan2", use the commands

```
awplus# configure terminal
awplus(config)# interface vlan2
awplus(config-if)# no mtu
```

To restore the MTU size to the default MTU size of 1500 bytes on “vlan2” to “vlan4”, use the commands

```
awplus# configure terminal
awplus(config)# interface vlan2-vlan4
awplus(config-if)# no mtu
```

Related Commands show interface

show interface

Overview Use this command to display interface configuration and status.

For information on filtering and saving command output, see the "Getting Started with AlliedWare Plus" Feature Overview and Configuration Guide.

Syntax

```
show interface [<interface-list>]
show interface lo
```

Parameter	Description
<interface-list>	The interfaces or ports to configure. An interface-list can be: • an interface such as a VLAN (e.g. `vlan1`), a switch port (e.g. `port1.0.1`), a static channel group (e.g. `sa3`), a dynamic (LACP) channel group (e.g. `po4`), a PPP interface (e.g. `ppp0`), an Ethernet interface (e.g. eth1), a tunnel interface (e.g. tunnel0), or a bridge interface (e.g. br2). • a continuous range of interfaces, ports, static channel groups or dynamic (LACP) channel groups separated by a hyphen; e.g. `vlan2-8`, or `port1.0.1-1.0.6`, or `sa1-2`, or `po1-2` • a comma-separated list of the above; e.g. `port1.0.1,port1.0.4-1.0.6`. Do not mix interface types in a list The specified interfaces must exist.
`lo`	The local loopback interface.

Mode User Exec and Privileged Exec

Usage Note that the output displayed with this command will show MTU (Maximum Transmission Unit) size for VLAN interfaces, and MRU (Maximum Received Unit) size for switch ports.

Example To display configuration and status information for all interfaces, use the command:

```
awplus# show interface
```

Figure 9-1: Example output from the **show interface** command

```
awplus#show interface
Interface port1.0.1
  Scope: both
  Link is UP, administrative state is UP
  Thrash-limiting
    Status Not Detected, Action link-down, Timeout 60(s)
  Hardware is Ethernet, address is 0000.cd24.daeb
  index 5001 metric 1 mru 1500
  <UP,BROADCAST,RUNNING,MULTICAST>
  current duplex full, current speed 1000
  configured duplex auto, configured speed auto, configured polarity auto
  current ecofriendly lpi
  configured ecofriendly lpi
  SNMP link-status traps: Sending (Suppressed after 20 traps in 60 sec.)
    input packets 2396, bytes 324820, dropped 0, multicast packets 2370
    output packets 73235, bytes 406566, multicast packets 7321 broadcast packets 7
  Time since last state change: 0 days 16:35:52

...
```

To display configuration and status information for interface `lo`, use the command:

```
awplus# show interface lo
```

Figure 9-2: Example output from the **show interface lo** command

```
awplus#show interface lo
Interface lo
  Scope: both
  Link is UP, administrative state is UP
  Hardware is Loopback
  index 1 metric 1
  <UP,LOOPBACK,RUNNING>
  SNMP link-status traps: Disabled
    input packets 0, bytes 0, dropped 0, multicast packets 0
    output packets 0, bytes 0, multicast packets 0 broadcast packets 0
  Time since last state change: 69 days 01:28:47
```

To display configuration and status information for interfaces `vlan1` and `vlan2`, use the command:

```
awplus# show interface vlan1,vlan2
```

Figure 9-3: Example output from the **show interface vlan1,vlan2** command

```
awplus#show interface vlan1,vlan2
Interface vlan1
  Scope: both
  Link is UP, administrative state is UP
  Hardware is VLAN, address is 0015.77e9.5c50
  IPv4 address 192.168.1.1/24 broadcast 192.168.1.255
  index 201 metric 1 mtu 1500
  arp ageing timeout 300
<UP,BROADCAST,RUNNING,MULTICAST>
  SNMP link-status traps: Disabled
  Bandwidth 1g
    input packets 295606, bytes 56993106, dropped 5, multicast packets 156
    output packets 299172, bytes 67379392, multicast packets 0 broadcast packets 0
  Time since last state change: 0 days 14:22:39

 Interface vlan2
  Scope: both
  Link is DOWN, administrative state is UP
  Hardware is VLAN, address is 0015.77e9.5c50
  IPv4 address 192.168.2.1/24 broadcast 192.168.2.255
  Description: ip_phone_vlan
  index 202 metric 1 mtu 1500
  arp ageing timeout 300
  <UP,BROADCAST,MULTICAST>
  SNMP link-status traps: Disabled
  Bandwidth 1g
    input packets 0, bytes 0, dropped 0, multicast packets 0
    output packets 90, bytes 4244, multicast packets 0 broadcast packets 0
  Time since last state change: 0 days 14:22:39
```

To display configuration and status information for `br1`, use the command:

```
awplus# show interface br1
```

```
awplus#show interface br1
Interface br1
  Link is UP, administrative state is UP
  Hardware is Bridge
  IPv6 address fe80::200:cdff:fe38:f7/64
  index 33555969 metric 1
  MAC ageing time 300
  <UP,BROADCAST,RUNNING,MULTICAST>
  SNMP link-status traps: Disabled
    input packets 0, bytes 0, dropped 0, multicast packets 0
    output packets 3, bytes 218, multicast packets 0 broadcast packets 0
  Time since last state change: 0 days 00:00:09
```

To display configuration and status information for `eth1`, use the command:

```
awplus# show interface eth1
```

Figure 9-4: Example output from the **show interface eth1** command:

```
awplus#show interface eth1
Interface eth1
  Link is DOWN, administrative state is UP
  Hardware is Ethernet, address is 0200.0034.5682
  index 9 metric 1 mtu 1500
  configured duplex auto, configured speed auto, configured polarity auto
  <UP,BROADCAST,MULTICAST>
  SNMP link-status traps: Disabled
  Bandwidth 1g
    input packets 0, bytes 0, dropped 0, multicast packets 0
    output packets 0, bytes 0
  Time since last state change: 0 days 20:18:54
```

Related Commands

mru jumbo

mtu

show interface brief

show interface brief

Overview Use this command to display brief interface, configuration, and status information, including provisioning information.

For information on filtering and saving command output, see the "Getting Started with AlliedWare Plus" Feature Overview and Configuration Guide.

Syntax

```
show interface brief
```

Mode User Exec and Privileged Exec

Output Figure 9-5: Example output from **show interface brief**

```
awplus#show interface brief
Interface              Status          Protocol
port1.0.1              admin up        down
port1.0.2              admin up        down
port1.0.3              admin up        down
port1.0.4              admin up        down
port1.0.5              admin up        down
port1.0.6              admin up        down
port1.0.7              admin up        down
port1.0.8              admin up        down
eth2                   admin up        down
eth1                   admin up        down
lo                     admin up        running
vlan1                  admin up        down
vlan2                  admin up        down
ppp1                   admin up        down
```

Table 9-1: Parameters in the output of **show interface brief**

Parameter	Description
`Interface`	The name or type of interface.
`Status`	The administrative state. This can be either **admin up** or **admin down**.
`Protocol`	The link state. This can be either **down**, **running**, or **provisioned**.

Related Commands show interface

show interface memory

show interface memory

Overview This command displays the shared memory used by either all interfaces, or the specified interface or interfaces. The output is useful for diagnostic purposes by Allied Telesis authorized service personnel.

For information on filtering and saving command output, see the "Getting Started with AlliedWare Plus" Feature Overview and Configuration Guide.

Syntax

```
show interface memory
show interface <port-list> memory
```

Parameter	Description
<port-list>	Display information about only the specified port or ports. The port list can be: • an Eth (e.g. eth1) or switch port (e.g. port1.0.4), a static channel group (e.g. sa2) or a dynamic (LACP) channel group (e.g. po2) • a continuous range of ports separated by a hyphen (e.g. port1.0.1-1.0.4, or sa1-2, or po1-2) • a comma-separated list of ports and port ranges (e.g. port1.0.1,port1.0.4-1.0.6). Do not mix port types in the same list.

Mode User Exec and Privileged Exec

Example To display the shared memory used by all interfaces, use the command:

```
awplus# show interface memory
```

To display the shared memory used by port1.0.1 and port1.0.5 to port1.0.6, use the command:

```
awplus# show interface port1.0.1,port1.0.5-1.0.6 memory
```

Output Figure 9-6: Example output from the **show interface memory** command

```
awplus#show interface memory
Vlan blocking state shared memory usage
---------------------------------------------
Interface    shmid        Bytes Used     nattch     Status
port1.0.1    294921       512            1
port1.0.2    491535       512            1
port1.0.3    458766       512            1
port1.0.4    524304       512            1
port1.0.5    425997       512            1
port1.0.6    589842       512            1
port1.0.7    557073       512            1
port1.0.8    622611       512            1
eth2         327690       512            1
eth1         393228       512            1
lo           360459       512            1
```

Figure 9-7: Example output from **show interface <port-list> memory** for a list of interfaces

```
awplus#show interface port1.0.1,port1.0.5-1.0.6 memory
Vlan blocking state shared memory usage
---------------------------------------------
Interface    shmid        Bytes Used     nattch     Status
port1.0.1    294921       512            1
port1.0.5    425997       512            1
port1.0.6    589842       512            1
```

Related Commands

show interface brief

show interface status

show interface switchport

show interface status

Overview Use this command to display the status of the specified interface or interfaces. Note that when no interface or interfaces are specified then the status of all interfaces on the device are shown.

Syntax

```
show interface [<port-list>] status
```

Parameter	Description
<port-list>	The ports to display information about. The port list can be: • a switch port (e.g. port1.0.6), a static channel group (e.g. sa2) or a dynamic (LACP) channel group (e.g. po2) • a continuous range of ports separated by a hyphen, e.g. port1.0.1-1.0.6, or sa1-2, or po1-2 • a comma-separated list of ports and port ranges, e.g. port1.0.1,port1.0.4-1.0.6. Do not mix switch ports, static channel groups, and dynamic (LACP) channel groups in the same list

Examples To display the status of ports 1.0.1 to 1.0.4, use the commands:

```
awplus# show interface port1.0.1-1.0.4 status
```

Table 10: Example output from the **show interface <port-list> status** command

```
awplus#show interface port1.0.1-1.0.4 status
Port       Name               Status            Vlan Duplex   Speed Type
port1.0.1                     notconnect           1 auto      auto 1000BASE-T
port1.0.2                     notconnect           1 auto      auto 1000BASE-T
port1.0.3                     notconnect           1 auto      auto 1000BASE-T
port1.0.4                     notconnect           1 auto      auto 1000BASE-T
```

To display the status of all ports, use the commands:

```
awplus# show interface status
```

Table 11: Example output from the **show interface status** command

```
awplus#sho int status
Port      Name               Status             Vlan Duplex   Speed Type
port1.0.1 Trunk_Net          connected         trunk a-full  a-1000 1000BaseTX
port1.0.2 Access_Net1        connected             5 full      1000 1000BaseTX
port1.0.3 Access_Net1        disabled              5 auto      auto 1000BaseTX
port1.0.4 Access_Net2        connected             6 auto      auto 1000BaseTX
...
eth2                         notconnect          none auto      auto 1000BASE-T
eth1                         notconnect          none auto      auto 1000BASE-T
```

Table 12: Parameters in the output from the **show interface status** command

Parameter	Description
`Port`	Name/Type of the interface.
`Name`	Description of the interface.
`Status`	The administrative and operational status of the interface; one of: • disabled: the interface is administratively down. • connect: the interface is operationally up. • notconnect: the interface is operationally down.
`Vlan`	VLAN type or VLAN IDs associated with the port: • When the VLAN mode is trunk, it displays **trunk** (it does not display the VLAN IDs). • When the VLAN mode is access, it displays the VLAN ID. • When the VLAN mode is private promiscuous, it displays the primary VLAN ID if it has one, and **promiscuous** if it does not have a VLAN ID. • When the VLAN mode is private host, it displays the primary and secondary VLAN IDs. • When the port is an Eth port, it displays **none**: there is no VLAN associated with it. • When the VLAN is dynamically assigned, it displays the current dynamically assigned VLAN ID (not the access VLAN ID), or **dynamic** if it has multiple VLANs dynamically assigned.
`Duplex`	The actual duplex mode of the interface, preceded by **a-** if it has autonegotiated this duplex mode. If the port is disabled or not connected, it displays the configured duplex setting.
`Speed`	The actual link speed of the interface, preceded by **a-** if it has autonegotiated this speed. If the port is disabled or not connected, it displays the configured speed setting.
`Type`	The type of interface, e.g. 1000BaseTX. For SFP bays, it displays **Unknown** if it does not recognize the type of SFP installed, or **Not present** if an SFP is not installed or is faulty.

Related Commands

show interface

show interface memory

shutdown

Overview This command shuts down the selected interface. This administratively disables the link and takes the link down at the physical (electrical) layer.

Use the **no** variant of this command to disable this function and therefore to bring the link back up again.

Syntax

```
shutdown
no shutdown
```

Mode Interface Configuration

Usage If you shutdown an aggregator, the device shows the admin status of the aggregator and its component ports as “admin down”. While the aggregator is down, the device accepts **shutdown** and **no shutdown** commands on component ports, but these have no effect on port status. Ports will not come up again while the aggregator is down.

Example To shut down port1.0.2, use the commands:

```
awplus# configure terminal
awplus(config)# interface port1.0.2
awplus(config-if)# shutdown
```

To bring up port1.0.2, use the commands:

```
awplus# configure terminal
awplus(config)# interface port1.0.2
awplus(config-if)# no shutdown
```

To shut down vlan2, use the commands:

```
awplus# configure terminal
awplus(config)# interface vlan2
awplus(config-if)# shutdown
```

To bring up vlan2, use the commands:

```
awplus# configure terminal
awplus(config)# interface vlan2
awplus(config-if)# no shutdown
```

10 USB Cellular Modem Commands

Introduction

Overview This chapter provides an alphabetical reference of commands used to configure USB Cellular Modems.

For more information, see the USB Cellular Modem Feature Overview and Configuration Guide.

Command List

- "apn" on page 390
- "chat-script" on page 392
- "encapsulation ppp" on page 393
- "show cellular" on page 395
- "show system usb" on page 398
- "usb mode-switch" on page 400

apn

Overview Use this command to set the Access Point Name (APN) to use to connect to a 3G serial cellular network.

Use the **no** variant of this command to unset the APN.

Syntax

```
apn <access-point-name>
no apn <access-point-name>
```

Parameter	Description
<access-point-name>	The APN to use to connect to a cellular network (for example, www.example.com).

Default No APN is set

Mode Interface Configuration (Cellular)

Usage The APN has to be set in order to initiate the cellular network connection. Some mobile network operators do not require a specific APN to be specified, in this case any APN can be used.

Examples To set the APN to www.example.com for a cellular interface, use the commands:

```
awplus# configure terminal
awplus(config)# int cellular0
awplus(config-if)# apn www.example.com
```

Output Figure 10-1: Example output from the **apn** command

```
awplus#configure terminal
awplus(config)#int cellular0
awplus(config-if)#apn www.example.com
```

To unset the APN, use the commands:

```
awplus# configure terminal
awplus(config)# int cellular0
awplus(config-if)# no apn
```

Output Figure 10-2: Example output from the **no apn** command

```
awplus#configure terminal
awplus(config)#int cellular0
awplus(config-if)#no apn
```

Related Commands chat-script

show cellular

show system usb

usb mode-switch

chat-script

Overview Use this command to set a chat-script, instead of the default chat-script, to connect to a 3G serial cellular network.

Use the **no** variant of this command to set the chat-script back to the default.

Syntax

```
chat-script <file-name>
no chat-script <file-name>
```

Parameter	Description
<file-name>	The path to the chat-script file (this file has to have a ".chat" extension).

Default The default chat-script is a built in chat-script that in most cases is sufficient for connecting to a cellular network.

Mode Interface Configuration (Cellular)

Usage The chat-script file must have the file extension ".chat". The chat-script consists of a sequence of expect-send pairs of strings. The send strings are AT (Hayes) commands. Any occurrence of the string $APN in the chat-script will be substituted with the Access Point Name (APN) configured on a cellular interface.

Examples To use a non-default chat-script, "connect.chat", use the commands:

```
awplus# configure terminal
awplus(config)# interface cellular0
awplus(config-if)# #chat-script connect.chat
```

To use the default chat-script, use the commands:

```
awplus# configure terminal
awplus(config)# interface cellular0
awplus(config-if)# #no chat-script
```

Related Commands

apn

show cellular

show system usb

usb mode-switch

encapsulation ppp

Overview Use this command to enable PPP encapsulation and create one or more PPP interfaces over Ethernet, a cellular interface, or a L2TPv2 managed VPN.

Use the **no** variant of this command to disable PPP encapsulation and remove the specified PPP interface.

Syntax

```
encapsulation ppp <index>
no encapsulation ppp <index>
```

Parameter	Description
<index>	The PPP interface index number in the range from 0 to 255.

Default No PPP encapsulation or interfaces are configured by default.

Mode Interface Configuration mode for an Ethernet interface (e.g. **interface eth1**), or an Ethernet sub-interface (e.g. **interface eth1.1**), or a cellular interface (e.g. **interface cellular0**).

L2TP Tunnel Configuration mode for an L2TP tunnel (e.g. **l2tp tunnel tunnel0**).

Examples To configure a PPP interface with index 0 for Ethernet interface eth1, use the commands:

```
awplus# configure terminal
awplus(config)# interface eth1
awplus(config-if)# encapsulation ppp 0
```

To shut down the ppp0 interface and remove it from Ethernet interface eth1, use the commands:

```
awplus# configure terminal
awplus(config)# interface ppp0
awplus(config-if)# shutdown
awplus(config-if)# interface eth1
awplus(config-if)# no encapsulation ppp 0
```

To set the L2TP tunnel tunnel1 to encapsulate the PPP interface with index 1, use the commands:

```
awplus# configure terminal
awplus(config)# l2tp tunnel tunnel1
awplus(config-l2tp-tunnel)# encapsulation ppp 1
```

To remove the PPP interface with index 1 from L2TP tunnel tunnel1, use the commands:

```
awplus# configure terminal
awplus(config)# l2tp tunnel tunnel1
awplus(config-l2tp-tunnel)# no encapsulation ppp 1
```

Related Commands

l2tp tunnel

ppp service-name (PPPoE)

show interface (PPP)

show cellular

Overview Use this command to display status information about 3G serial USB cellular modems currently plugged into your AR-Series Firewall.

Syntax `show cellular <cellular-interface-name>`

Parameter	Description
<cellular-interface-name>	Specify the name of a cellular interface. This option displays status information for the cellular modem associated with that interface.

Default None

Mode Privileged Exec

Usage If a cellular interface is specified, then the command only shows information for the cellular modem associated with that interface. Different vendors, and models of cellular modems often provide different sets of information:

- Vendor-specific information will not be displayed if the information is unable to be obtained from the cellular modem.
- For information that is common to most cellular modems, "(unknown)" will be displayed if the information was not obtained successfully.

Examples To show status information about all cellular modems, use the command:

```
awplus# show cellular
```

Output Figure 10-3: Example output from **show cellular**

```
awplus#show cellular
Interface cellular0
  Manufacturer: huawei
  Model ID: E1762
  Revision ID: 11.126.10.00.74
  Serial ID: 351553036840711
  IMSI: 530011104647258
  Signal Quality:
    RSSI: -71 dBm
    Bit Error Rate: (unknown)
  Service Center Address:
    Phone Number: +6421600600
    Number Type: International
  GPRS Mobile Station Class: Class A
  Serial Port Configuration:
    Baud rate: 115200
    Character Format: 8-N-1
    Parity: Space
```

```
  Terminal Equipment Character Set: IRA
  Cable interface DTE-DCE local flow control:
    To DTE: RTS
    To DCE: CTS
  System Time: 1980/01/06,03:37:39
  GPRS Network Registration Status: Registered, home network
  PIN Request Status: READY
  Functionality Level: Full functionality (power-saving disabled)
  Facility Lock Status:
    SIM card lock: Not active
    SIM fixed dialling memory feature: Not active
    Network personalization: Not active
    Network subset personalization: Not active
    Service provider personalization: Not active
    Corporate personalization: Not active
    Lock phone to first SIM card: Not active
  Call Mode: Single mode
  Wireless Data Service: 3GPP systems (GERAN, UTRAN and E-UTRAN)
  GPRS Service Status: Mobile station is attached to a GPRS service
  Dialling Number Type: National
  Bearer Service Type:
    Autobauding: Enabled
    Service: Data circuit asynchronous (UDI or 3.1 kHz modem)
    Connection Element: Non-transparent
  Automatic time and time zone update via NITS: Not enabled
  PPP support between TE and MT: Supported
  Last Error Report: No cause information available
  PLMN selection method: User controlled PLMN selected from Access Technology
PDP Contexts:
  Context ID: 1
    Type: IP
    APN: www.vodafone.net.nz
    Address: 0.0.0.0
    Header Compression: Off
    Status: Not active
  Primary DNS: 0.0.0.0
  Secondary DNS: 0.0.0.0
  Diagnostic mode baud rate: 115200
  TE-DCE baud rate: 115200
  Tolerance to long delays in PDP call setup: Enabled
  Hardware Version: CD25TCPV
  System Info:
    System Service State: Valid service
    System Service Domain: CS and PS service
    Roaming Status: Not roaming
    System Mode: WCDMA mode
    SIM card state: Valid USIM card state
    System Sub-mode: WCDMA mode
  System Config:
    Supported System Mode: Auto-select
    Network Acquisition Order: WCDMA, then GSM
    Service Domain Support: CS and PS
 Card-Lock:
    Lock Status: Unlock code does not need to be provided
    Remaining Unlock Attempts: 10
    PLMN ID of the operator who has locked this device: None
```

```
 Signal Strength:
    RSSI (dBm): -64
    ECIO (dBm): -5
    RSCP (dBm): -69
  ICCID: 984610411061462785F5
  Software Version: E1762 11.126.10.00.74,CD25TCPV,Ver.B
  HSUPA status: Enabled
  HSDPA status: Enabled
  Card Mode: USIM
  Device Mode:
    Mode ID: 20
    Port Modes:
      Port 0: MDM
      Port 1: NDIS
      Port 2: DIAG
      Port 3: PCUI
      Port 4: CDROM
  Data Service Traffic:
    Last Connection Time (s): 5134
    Last Bytes Transmitted: 0
    Last Bytes Received: 168
    Total Connection Time (s): 64354
    Total Bytes Transmitted: 910
    Total Bytes Received: 3168
  PIN Status:
    Status: READY
    Remaining input attempts:
      PUK: 10
      PIN: 3
      PUK2: 10
      PIN2: 3
```

To show status information about the cellular modem associated with interface ‘cellular0’ only, use the command:

```
awplus# show cellular cellular0
```

Related Commands

apn

chat-script

show system usb

usb mode-switch

show system usb

Overview Use this command to display technical information about connected USB devices.

Syntax

```
show system usb [detail]
```

Parameter	Description
`detail`	This option provides greater detail about the USB device, such as descriptors for the device, configuration and Interface.

Default None

Mode Privileged Exec

Examples To show information about USB devices connected to your AR-Series Firewall, use the command:

```
awplus# show system usb
```

Output Figure 10-4: Example output from **show system usb**

```
awplus#show system usb
Bus 001 Device 003: ID 12d1:140c Huawei Technologies Co., Ltd. E180v modem
```

To show greater detail of information about USB devices connected to your AR-Series Firewall, use the command:

```
awplus# show system usb detail
```

Output Figure 10-5: Example output from **show system usb detail**

```
awplus#show system usb detail

Bus 001 Device 002: ID 12d1:1001 Huawei Technologies Co., Ltd. E169/E620/E800 HS
DPA Modem
Device Descriptor:
  bLength                18
  bDescriptorType         1
  bcdUSB               2.00
  bDeviceClass            0 (Defined at Interface level)
  bDeviceSubClass         0
  bDeviceProtocol         0
  bMaxPacketSize0        64
```

```
  idVendor           0x12d1 Huawei Technologies Co., Ltd.
  idProduct          0x1001 E169/E620/E800 HSDPA Modem
  bcdDevice            0.00
  iManufacturer           3 HUAWEI Technology
  iProduct                2 HUAWEI Mobile
  iSerial                 0
  bNumConfigurations      1
  Configuration Descriptor:
    bLength                 9
    bDescriptorType         2
    wTotalLength           85
    bNumInterfaces          3
    bConfigurationValue     1
    iConfiguration          1 Huawei   Configuration
    bmAttributes         0xe0
      Self Powered
      Remote Wakeup
    MaxPower              500mA
    Interface Descriptor:
      bLength                 9
      bDescriptorType         4
      bInterfaceNumber        0
      bAlternateSetting       0
      bNumEndpoints           3
      bInterfaceClass       255 Vendor Specific Class
      bInterfaceSubClass    255 Vendor Specific Subclass
      bInterfaceProtocol    255 Vendor Specific Protocol
      iInterface              0
...
```

Related Commands

apn

chat-script

show cellular

usb mode-switch

usb mode-switch

Overview Use this command to map a specific USB device to a mode-switch configuration file.

The **no** variant of this command removes the configuration corresponding to a specific ID.

Syntax

```
usb mode-switch id <1-16> vendor-id <vendor-id> product-id
<product-id> [manufacturer <manufacturer>|product
<product>|serial <serial>|vendor <vendor>|model
<model>|revision <revision>] file <file-name>
```

```
no usb mode-switch id <1-16>
```

Parameter	Description
id	mode switch configuration ID.
<1-16>	Configuration ID number (from 1 through 16).
vendor-id	Specify the USB device's vendor ID.
<vendor-id>	4 digit hexadecimal value representing the device's vendor ID.
product-id	Specify the USB device's product ID.
<product-id>	4 digit hexadecimal value representing the device's product ID.
manufacturer	Specify the USB product descriptor.
<manufacturer>	All or part of the USB manufacturer string descriptor (with spaces replaced by underscores).
product	Specify the USB product descriptor.
<product>	All or part of the USB product string descriptor (with spaces replaced by underscores).
serial	Specify the USB serial descriptor.
<serial>	All or part of the USB serial string descriptor (with spaces replaced by underscores).
vendor	Specify the SCSI vendor descriptor.
<vendor>	All or part of the SCSI model descriptor (with spaces replaced by underscores).
model	Specify the SCSI model descriptor.
<model>	All or part of the SCSI revision descriptor (with spaces replaced by underscores).
revision	Specify the SCSI revision descriptor.
<revision>	All or part of the SCSI revision descriptor (with spaces replaced by underscores).

Parameter	Description
`file`	Specify the mode switch config file to be used instead of the default when the target device is inserted.
<file>	Mode switch configuration file URL with extension .conf.

Default Some USB devices will use a default mode switch configuration file if one is not specified.

Mode Global Configuration

Usage Some USB devices must be explicitly told to switch to a compatible mode. The **usb mode-switch** command does this by matching on a target device by its USB vendor and product IDs, and executing a specified configuration file.

Additional parameters can be defined which specify other USB and SCSI descriptors. These are useful if there are multiple devices that have the same product and vendor IDs, but differ in the other parameters. The mode switch configuration files must have the extension ".conf".

Examples To add a mode switch configuration for a USB device, use the commands:

```
awplus# configure terminal
awplus(config)# usb mode-switch id 1 vendor-id 12d1 product-id 140c manufacturer HUAWEI file switch.conf
```

To remove a mode switch configuration for a USB device, use the commands:

```
awplus# configure terminal
awplus(config)# no usb mode-switch id 1
```

Related Commands

apn

chat-script

show cellular

show system usb

usb mode-switch

11 Port Mirroring Commands

Introduction

Overview This chapter provides an alphabetical reference of commands used to configure Port Mirroring.

For more information, see the Mirroring Feature Overview and Configuration Guide.

Command List

- "mirror interface" on page 403
- "show mirror" on page 405
- "show mirror interface" on page 406

mirror interface

Overview Use this command to define a mirror port and mirrored (monitored) ports and direction of traffic to be mirrored. The port for which you enter interface mode will be the mirror port.

The destination port is removed from all VLANs, and no longer participates in other switching.

Use the **no** variant of this command to disable port mirroring by the destination port on the specified source port.

Syntax

```
mirror interface <source-port-list> direction
{both|receive|transmit}
```

```
no mirror interface <source-port-list>
```

Parameter	Description
<source-port-list>	The source switch ports to mirror. A port-list can be: • a port (e.g. port1.0.2) • a continuous range of ports separated by a hyphen, e.g. port1.0.1-1.0.2 • a comma-separated list of ports and port ranges, e.g. port1.0.1,port1.0.4-1.0.6 The source port list cannot include dynamic or static channel groups (link aggregators).
`direction`	Specifies whether to mirror traffic that the source port receives, transmits, or both.
`both`	Mirroring traffic both received and transmitted by the source port.
`receive`	Mirroring traffic received by the source port.
`transmit`	Mirroring traffic transmitted by the source port.

Mode Interface Configuration

Usage Use this command to send traffic to another device connected to the mirror port for monitoring.

For more information, see the Mirroring Feature Overview and Configuration Guide.

A mirror port cannot be associated with a VLAN. If a switch port is configured to be a mirror port, it is automatically removed from any VLAN it was associated with.

This command can only be applied to a single mirror (destination) port, not to a range of ports, nor to a static or dynamic channel group. Do not apply multiple interfaces with an interface command before issuing the mirror interface command. One interface may have multiple mirror interfaces.

Example To mirror traffic received and transmitted on port1.0.4 and port1.0.5 to destination port1.0.3, use the commands:

```
awplus# configure terminal
awplus(config)# interface port1.0.3
awplus(config-if)# mirror interface port1.0.4,port1.0.5
direction both
```

show mirror

Overview Use this command to display the status of all mirrored ports.

Syntax

```
show mirror
```

Mode User Exec and Privileged Exec

Example To display the status of all mirrored ports, use the following command:

```
awplus# show mirror
```

Output Figure 11-1: Example output from the **show mirror** command

```
Mirror Test Port Name: port1.0.1
Mirror option: Enabled
Mirror direction: both
Monitored Port Name: port1.0.2
Mirror Test Port Name: port1.0.3
Mirror option: Enabled
Mirror direction: receive
Monitored Port Name: port1.0.4
Mirror Test Port Name: port1.0.3
Mirror option: Enabled
Mirror direction: receive
Monitored Port Name: port1.0.1
Mirror Test Port Name: port1.0.1
Mirror option: Enabled
Mirror direction: receive
Monitored Port Name: port1.0.3
Mirror Test Port Name: port1.0.1
Mirror option: Enabled
Mirror direction: transmit
Monitored Port Name: port1.0.4
```

show mirror interface

Overview Use this command to display port mirroring configuration for a mirrored (monitored) switch port.

Syntax `show mirror interface <port>`

Parameter	Description
<port>	The monitored switch port to display information about.

Mode User Exec, Privileged Exec and Interface Configuration

Example To display port mirroring configuration for the `port1.0.4`, use the following commands:

```
awplus# configure terminal
awplus(config)# interface port1.0.4
awplus(config-if)# show mirror interface port1.0.4
```

Output Figure 11-2: Example output from the **show mirror interface** command

```
Mirror Test Port Name: port1.0.3
Mirror option: Enabled
Mirror direction: both
Monitored Port Name: port1.0.4
```

12 Interface Testing Commands

Introduction

Overview This chapter provides an alphabetical reference of commands used for testing interfaces.

Command List

- "clear test interface" on page 408
- "service test" on page 409
- "test interface" on page 410

clear test interface

Overview This command clears test results and counters after issuing the test interface command. Test results and counters must be cleared before executing subsequent test interface commands.

Syntax

```
clear test interface {<port-list>|all}
```

Parameter	Description
`<port-list>`	The ports to test. A port-list can be: • a switch port (e.g. `port1.0.6`) • a continuous range of ports separated by a hyphen, e.g. `port1.0.1-port1.0.6` • a comma-separated list of the above, e.g. `port1.0.1,port1.0.5-1.0.6` The specified ports must exist.
`all`	All interfaces

Mode Privileged Exec

Examples To clear the counters for `port1.0.1` use the command:

```
awplus# clear test interface port1.0.1
```

To clear the counters for all interfaces use the command:

```
awplus# clear test interface all
```

Related Commands test interface

service test

Overview This command puts the device into the interface testing state, ready to begin testing. After entering this command, enter Interface Configuration mode for the desired interfaces and enter the command test interface.

Do not test interfaces on a device that is part of a live network—disconnect the device first.

Use the **no** variant of this command to stop the test service.

Syntax

```
service test
no service test
```

Mode Global Configuration

Example To put the device into a test state, use the command:

```
awplus(config)# service test
```

Related Commands test interface

test interface

Overview This command starts a test on a port or all ports or a selected range or list of ports.

Use the **no** variant of this command to disable this function. The test duration can be configured by specifying the time in minutes after specifying a port or ports to test.

For an example of all the commands required to test switch ports, see the Examples section in this command. To test an Ethernet port, set its speed to 100 by using the command **speed 100.**

NOTE: *Do not run test interface on live networks because this will degrade network performance.*

Syntax

```
test interface {<port-list>|all} [time{<1-60>|cont}]
no test interface {<port-list>|all}
```

Parameter	Description
`<port-list>`	The ports to test. A port-list can be: • a switch port (e.g. `port1.0.6`) • a continuous range of ports separated by a hyphen, e.g. `port1.0.1-port1.0.6` • a comma-separated list of the above, e.g. `port1.0.1,port1.0.5-1.0.6` The specified ports must exist.
`all`	All ports
`time`	Keyword entered prior to the value for the time duration of the interface test.
`<1-60>`	Specifies duration of time to test the interface or interfaces in minutes (from a minimum of 1 minute to a maximum of 60 minutes). The default is 4 minutes.
`cont`	Specifies continuous interface testing until canceled with command negation.

Mode Privileged Exec

Example To test the switch ports in VLAN 1, install loopbacks in the ports, and enter the following commands:

```
awplus(config)# service test
awplus(config)# no spanning-tree rstp enable bridge-forward
awplus(config)# interface vlan1
awplus(config-if)# shutdown
awplus(config-if)# end
awplus# test interface all
```

To see the output, use the commands:

```
awplus# show test
awplus# show test count
```

To start the test on all interfaces for 1 minute use the command:

```
awplus# test interface all time 1
```

Related Commands clear test interface

Part 2: Interfaces and Layer 2

13 Switching Commands

Introduction

Overview This chapter provides an alphabetical reference of commands used to configure switching.

For more information, see the Switching Feature Overview and Configuration Guide.

Command List

- "backpressure" on page 415
- "clear mac address-table dynamic" on page 417
- "clear mac address-table static" on page 419
- "clear port counter" on page 420
- "debug platform packet" on page 421
- "duplex" on page 423
- "flowcontrol (switch port)" on page 425
- "linkflap action" on page 427
- "mac address-table acquire" on page 428
- "mac address-table ageing-time" on page 429
- "mac address-table static" on page 430
- "polarity" on page 431
- "show debugging platform packet" on page 432
- "show flowcontrol interface" on page 433
- "show interface err-disabled" on page 434
- "show interface switchport" on page 435
- "show mac address-table" on page 436
- "show platform" on page 438

- "show platform port" on page 439
- "show storm-control" on page 444
- "speed" on page 445
- "storm-control level" on page 447
- "undebug platform packet" on page 448

backpressure

Overview This command provides a method of applying flow control to ports running in half duplex mode. The setting will only apply when the link is in the half-duplex state.

You can disable backpressure on an interface using the **off** parameter or the **no** variant of this command.

Syntax

```
backpressure {on|off}
no backpressure
```

Parameters	Description
`on`	Enables half-duplex flow control.
`off`	Disables half-duplex flow control.

Default Backpressure is turned off by default. You can determine whether an interface has backpressure enabled by viewing the running-config output; **backpressure on** is shown for interfaces if this feature is enabled.

Mode Interface Configuration

Usage The backpressure feature enables half duplex Ethernet ports to control traffic flow during congestion by preventing further packets arriving. Back pressure utilizes a pre-802.3x mechanism in order to apply Ethernet flow control to switch ports that are configured in the half duplex mode.

The flow control applied by the flowcontrol (switch port) command operates only on full-duplex links, whereas back pressure operates only on half-duplex links.

If a port has insufficient capacity to receive further frames, the device will simulate a collision by transmitting a CSMACD jamming signal from this port until the buffer empties. The jamming signal causes the sending device to stop transmitting and wait a random period of time, before retransmitting its data, thus providing time for the buffer to clear. Although this command is only valid for switch ports operating in half-duplex mode the remote device (the one sending the data) can be operating in the full duplex mode.

To see the currently-negotiated duplex mode for ports whose links are up, use the command show interface. To see the configured duplex mode (when different from the default), use the command show running-config.

Examples To enable back pressure flow control on interfaces `port1.0.1-port1.0.2` enter the following commands:

```
awplus# configure terminal
awplus(config)# interface port1.0.1-port1.0.2
awplus(config-if)# backpressure on
```

To disable back pressure flow control on interface `port1.0.2` enter the following commands:

```
awplus# configure terminal
awplus(config)# interface port1.0.2
awplus(config-if)# backpressure off
```

Validation Commands

show running-config

show interface

Related Commands

duplex

clear mac address-table dynamic

Overview Use this command to clear the filtering database of all entries learned for a selected MAC address, an MSTP instance, a switch port interface or a VLAN interface.

Syntax
```
clear mac address-table dynamic [address
<mac-address>|interface <port> [instance <inst>]|vlan <vid>]
```

Parameter	Description
`address`	Specify a MAC (Media Access Control) address to be cleared from the filtering database.
`<mac-address>`	Enter a MAC address to be cleared from the database in the format HHHH.HHHH.HHHH.
`interface`	Specify a switch port to be cleared from the filtering database.
`instance`	Specify an MSTP (Multiple Spanning Tree) instance to be cleared from the filtering database.
`<inst>`	Enter an MSTP instance in the range 1 to 63 to be cleared from the filtering database.
`vlan`	Specify a VLAN to be cleared from the filtering database.
`<vid>`	Enter a VID (VLAN ID) in the range 1 to 4094 to be cleared from the filtering database.

Mode Privileged Exec

Usage Use this command with options to clear the filtering database of all entries learned for a given MAC address, interface or VLAN. Use this command without options to clear any learned entries.

Use the optional `instance` parameter to clear the filtering database entries associated with a specified MSTP instance Note that you must first specify a switch port interface before you can specify an MSTP instance.

Compare this usage and operation with the clear mac address-table static command. Note that an MSTP instance cannot be specified with the command **clear mac address-table static**.

Examples This example shows how to clear all dynamically learned filtering database entries for all interfaces, addresses, VLANs.

```
awplus# clear mac address-table dynamic
```

This example shows how to clear all dynamically learned filtering database entries when learned through device operation for the MAC address 0000.5E00.5302.

```
awplus# clear mac address-table dynamic address 0000.5E00.5302
```

This example shows how to clear all dynamically learned filtering database entries when learned through device operation for a given MSTP instance `1` on switch port interface `port1.0.2`.

```
awplus# clear mac address-table dynamic interface port1.0.2
instance 1
```

Related Commands

clear mac address-table static

show mac address-table

clear mac address-table static

Overview Use this command to clear the filtering database of all statically configured entries for a selected MAC address, interface, or VLAN.

Syntax

```
clear mac address-table static [address <mac-address>|interface
<port>|vlan <vid>]
```

Parameter	Description
`address`	The MAC address whose entries are to be cleared from the filtering database.
`<mac-address>`	Specifies the MAC (Media Access Control) address to be cleared from. Enter this address in the format HHHH.HHHH.HHHH.
`interface`	Specify the interface from which statically configured entries are to be cleared.
`<port>`	Specify the switch port from which address entries will be cleared. This can be a single switch port, (e.g. port1.0.4), a static channel group (e.g. sa2), or a dynamic (LACP) channel group (e.g. po2).
`vlan`	A VLAN whose statically configured entries are to be cleared.
`<vid>`	Specifies the VLAN ID whose statically configured entries are to be cleared.

Mode Privileged Exec

Usage Use this command with options to clear the filtering database of all entries made from the CLI for a given MAC address, interface or VLAN. Use this command without options to clear any entries made from the CLI.

Compare this usage with clear mac address-table dynamic command.

Examples This example shows how to clear all filtering database entries configured through the CLI.

```
awplus# clear mac address-table static
```

This example shows how to clear all filtering database entries for a specific interface configured through the CLI.

```
awplus# clear mac address-table static interface port1.0.3
```

This example shows how to clear filtering database entries configured through the CLI for the mac address 0000.5E00.5302.

```
awplus# clear mac address-table static address 0000.5E00.5302
```

Related Commands

clear mac address-table dynamic

mac address-table static

show mac address-table

clear port counter

Overview Use this command to clear the packet counters of the port.

Syntax

```
clear port counter [<port>]
```

Parameter	Description
<port>	The port number or range

Mode Privileged Exec

Example To clear the packet counter for `port1.0.1`, use the command:

```
awplus#  clear port counter port1.0.1
```

Related Commands show platform port

debug platform packet

Overview This command enables platform to CPU level packet debug functionality on the device.

Use the **no** variant of this command to disable platform to CPU level packet debug. If the result means both send and receive packet debug are disabled, then any active timeout will be canceled.

Syntax

```
debug platform packet [recv] [send] [timeout <timeout>] [vlan <vlan-id>|all]
no debug platform packet [recv] [send]
```

Parameter	Description
`recv`	Debug packets received.
`send`	Debug packets sent.
`timeout`	Stop debug after a specified time.
<timeout>	<0-3600>The timeout period, specified in seconds.
`vlan`	Limit debug to a single VLAN ID specified.
<vlan-id>	<1-4094> The VLAN ID to limit the debug output on.
`all`	Debug all VLANs (default setting).

Default A 5 minute timeout is configured by default if no other timeout duration is specified.

Mode Privileged Exec and Global Configuration

Usage This command can be used to trace packets sent and received by the CPU. If a timeout is not specified, then a default 5 minute timeout will be applied.

If a timeout of 0 is specified, packet debug will be generated until the **no** variant of this command is used or another timeout value is specified. The timeout value applies to both send and receive debug and is updated whenever the **debug platform packet** command is used.

Examples To enable both receive and send packet debug for the default timeout of 5 minutes, enter:

```
awplus# debug platform packet
```

To enable receive packet debug for 10 seconds, enter:

```
awplus# debug platform packet recv timeout 10
```

To enable send packet debug with no timeout, enter:

```
awplus# debug platform packet send timeout 0
```

To enable VLAN packet debug for VLAN 2 with a timeout duration of 3 minutes, enter:

```
awplus# debug platform packet vlan 2 timeout 150
```

To disable receive packet debug, enter:

```
awplus# no debug platform packet recv
```

Related Commands

show debugging platform packet

undebug platform packet

duplex

Overview This command changes the duplex mode for the specified port.

To see the currently-negotiated duplex mode for ports whose links are up, use the command show interface. To see the configured duplex mode (when different from the default), use the command show running-config.

Syntax

```
duplex {auto|full|half}
```

Parameter	Description
`auto`	Auto-negotiate duplex mode.
`full`	Operate in full duplex mode only.
`half`	Operate in half duplex mode only.

Default By default, ports auto-negotiate duplex mode (except for 100Base-FX ports which do not support auto-negotiation, so default to full duplex mode).

Mode Interface Configuration

Usage Switch ports in a static or dynamic (LACP) channel group must have the same port speed and be in full duplex mode. Once switch ports have been aggregated into a channel group, you can set the duplex mode of all the switch ports in the channel group by applying this command to the channel group.

Examples To specify full duplex for `port1.0.4`, enter the following commands:

```
awplus# configure terminal
awplus(config)# interface port1.0.4
awplus(config-if)# duplex full
```

To specify half duplex for `port1.0.4`, enter the following commands:

```
awplus# configure terminal
awplus(config)# interface port1.0.4
awplus(config-if)# duplex half
```

To auto-negotiate duplex mode for `port1.0.4`, enter the following commands:

```
awplus# configure terminal
awplus(config)# interface port1.0.4
awplus(config-if)# duplex auto
```

Related Commands

backpressure

polarity

speed

show interface

flowcontrol (switch port)

Overview Use this command to enable flow control, and configure the flow control mode for the switch port.

Use the **no** variant of this command to disable flow control for the specified switch port.

Syntax

```
flowcontrol both
flowcontrol {send|receive} {off|on}
no flowcontrol
```

Parameter	Description
`both`	Use this parameter to specify send and receive flow control for the port.
`receive`	When the port receives pause frames, it temporarily stops (pauses) sending traffic.
`on`	Enable the specified flow control.
`off`	Disable the specified flow control.
`send`	When the port is congested (receiving too much traffic), it sends pause frames to request the other end to temporarily stop (pause) sending traffic.

Default By default, flow control is disabled.

Mode Interface Configuration

Usage The flow control mechanism specified by 802.3x is only for full duplex links. It operates by sending PAUSE frames to the link partner to temporarily suspend transmission on the link.

Flow control enables connected Ethernet ports to control traffic rates during congestion by allowing congested nodes to pause link operation at the other end. If one port experiences congestion, and cannot receive any more traffic, it notifies the other port to stop sending until the condition clears. When the local device detects congestion at its end, it notifies the remote device by sending a pause frame. On receiving a pause frame, the remote device stops sending data packets, which prevents loss of data packets during the congestion period.

Flow control is not recommended when running QoS or ACLs, because the complex queuing, scheduling, and filtering configured by QoS or ACLs may be slowed by applying flow control.

For half-duplex links, an older form of flow control known as backpressure is supported. See the related backpressure command.

For flow control on async serial (console) ports, see the flowcontrol hardware (asyn/console) command.

Examples

```
awplus# configure terminal
awplus(config)# interface port1.0.2
awplus(config-if)# flowcontrol receive on
awplus# configure terminal
awplus(config)# interface port1.0.2
awplus(config-if)# flowcontrol send on
awplus# configure terminal
awplus(config)# interface port1.0.2
awplus(config-if)# flowcontrol receive off
awplus# configure terminal
awplus(config)# interface port1.0.2
awplus(config-if)# flowcontrol send off
```

Related Commands

backpressure

show running-config

linkflap action

Overview Use this command to detect flapping on all ports. If more than 15 flaps occur in less than 15 seconds the flapping port will shut down.

Use the **no** variant of this command to disable flapping detection at this rate.

Syntax

```
linkflap action [shutdown]
no linkflap action
```

Parameter	Description
`linkflap`	Global setting for link flapping.
`action`	Specify the action for port.
`shutdown`	Shutdown the port.

Default Linkflap action is disabled by default.

Mode Global Configuration

Example To enable the linkflap action command on the device, use the following commands:

```
awplus# configure terminal
awplus(config)# linkflap action shutdown
```

mac address-table acquire

Overview Use this command to enable MAC address learning on the device.

Use the **no** variant of this command to disable learning.

Syntax
```
mac address-table acquire
no mac address-table acquire
```

Default Learning is enabled by default for all instances.

Mode Global Configuration

Example
```
awplus# configure terminal
awplus(config)# mac address-table acquire
```

mac address-table ageing-time

Overview Use this command to specify an ageing-out time for a learned MAC address. The learned MAC address will persist for at least the specified time.

The **no** variant of this command will reset the ageing-out time back to the default of 300 seconds (5 minutes).

Syntax

```
mac address-table ageing-time <ageing-timer> none
no mac address-table ageing-time
```

Parameter	Description
<ageing-timer>	*<10-1000000>* The number of seconds of persistence.
none	Disable learned MAC address timeout.

Default The default ageing time is 300 seconds.

Mode Global Configuration

Examples The following commands specify various ageing timeouts on the device:

```
awplus# configure terminal
awplus(config)# mac address-table ageing-time 1000
awplus# configure terminal
awplus(config)# mac address-table ageing-time none
awplus# configure terminal
awplus(config)# no mac address-table ageing-time
```

mac address-table static

Overview Use this command to statically configure the MAC address-table to forward or discard frames with a matching destination MAC address.

Syntax

```
mac address-table static <mac-addr> {forward|discard} interface
<port> [vlan <vid>]
```

```
no mac address-table static <mac-addr> {forward|discard}
interface <port> [vlan <vid>]
```

Parameter	Description
<mac-addr>	The destination MAC address in `HHHH.HHHH.HHHH` format.
<port>	The port to display information about. The port may be a switch port (e.g. `port1.0.4`), a static channel group (e.g. `sa2`), or a dynamic (LACP) channel group (e.g. `po2`).
<vid>	The VLAN ID. If you do not specify a VLAN, its value defaults to vlan 1.

Mode Global Configuration

Usage The **mac address-table static** command is only applicable to Layer 2 switched traffic within a single VLAN. Do not apply the **mac address-table static** command to Layer 3 switched traffic passing from one VLAN to another VLAN. Frames will not be discarded across VLANs because packets are routed across VLANs. This command only works on Layer 2 traffic.

Example

```
awplus# configure terminal
```

```
awplus(config)# mac address-table static 2222.2222.2222 forward
interface port1.0.4 vlan 3
```

Related Commands clear mac address-table static

show mac address-table

polarity

Overview This command sets the MDI/MDIX polarity on a copper-based switch port.

Syntax

```
polarity {auto|mdi|mdix}
```

Parameter	Description
`mdi`	Sets the polarity to MDI (medium dependent interface).
`mdix`	Sets the polarity to MDI-X (medium dependent interface crossover).
`auto`	The switch port sets the polarity automatically. This is the default option.

Default By default, switch ports set the polarity automatically (**auto**).

Mode Interface Configuration

Usage We recommend the default **auto** setting for MDI/MDIX polarity. Polarity applies to copper 10BASE-T, 100BASE-T, and 1000BASE-T switch ports; it does not apply to fiber ports. See the "MDI/MDIX Connection Modes" section in the Switching Feature Overview and Configuration Guide for more information.

Example To set the polarity for `port1.0.6` to fixed MDI mode, use the following commands:

```
awplus# configure terminal
awplus(config)# interface port1.0.6
awplus(config-if)# polarity mdi
```

show debugging platform packet

Overview This command shows platform to CPU level packet debugging information.

Syntax

```
show debugging platform packet
```

Mode User Exec and Privileged Exec

Example To display the platform packet debugging information, use the command:

```
awplus# show debugging platform packet
```

Related Commands

debug platform packet

undebug platform packet

show flowcontrol interface

Overview Use this command to display flow control information.

Syntax

```
show flowcontrol interface <port>
```

Parameter	Description
<port>	Specifies the name of the port to be displayed.

Mode User Exec and Privileged Exec

Example To display the flow control for the `port1.0.5`, use the command:

```
awplus# show flowcontrol interface port1.0.5
```

Output Figure 13-1: Example output from the **show flowcontrol interface** command for a specific interface

```
Port     Send  FlowControl    Receive  FlowControl  RxPause TxPause
          admin    oper         admin    oper
-----      ------- --------     ------- --------     ------- -------
port1.0.5 on       on           on       on           0       0
```

show interface err-disabled

Overview Use this command to show the ports which have been dynamically shut down by protocols running on the device and the protocols responsible for the shutdown.

Syntax

```
show interface [<interface-range> err-disabled]
```

Parameter	Description
<interface-range>	Interface range
`err-disabled`	Brief summary of interfaces shut down by protocols

Mode User Exec and Privileged Exec

Example To show which protocols have shut down ports, use the commands:

```
awplus# show interface err-disabled
```

show interface switchport

Overview Use this command to show VLAN information about each switch port.

Syntax

```
show interface switchport
```

Mode User Exec and Privileged Exec

Example To display VLAN information about each switch port, enter the command:

```
awplus# show interface switchport
```

Output Figure 13-2: Example output from the **show interface switchport** command

```
 Interface name          : port1.0.1
 Switchport mode         : access
 Ingress filter          : enable
 Acceptable frame types  : all
 Default Vlan            :  2
 Configured Vlans        : 2

 Interface name          : port1.0.2
 Switchport mode         : trunk
 Ingress filter          : enable
 Acceptable frame types  : all
 Default Vlan            :  1
 Configured Vlans        : 1 4 5 6 7 8
...
```

Related Commands show interface memory

show mac address-table

Overview Use this command to display the mac address-table for all configured VLANs.

Syntax

```
show mac address-table
```

Mode User Exec and Privileged Exec

Usage The **show mac address-table** command is only applicable to view a mac address-table for Layer 2 switched traffic within VLANs.

Example To display the mac address-table, use the following command:

```
awplus# show mac address-table
```

Output See the below sample output captured when there was no traffic being switched:

```
awplus#show mac address-table

VLAN Port          MAC               State
1    unknown       0000.cd28.0752    static
ARP  -             0000.cd00.0000    static
```

See the sample output captured when packets were switched and mac addresses were learned:

```
awplus#show mac address-table

VLAN Port          MAC               State
1    unknown       0000.cd28.0752    static
1    port1.0.6     0030.846e.9bf4    dynamic
1    port1.0.4     0030.846e.bac7    dynamic
ARP  -             0000.cd00.0000    static
```

Note the new mac addresses learned for `port1.0.4` and `port1.0.6` added as dynamic entries.

Note the first column of the output below shows VLAN IDs if multiple VLANs are configured:

```
awplus#show mac address-table

VLAN Port          MAC               State
1    unknown       0000.cd28.0752    static
1    port1.0.4     0030.846e.bac7    dynamic
2    unknown       0000.cd28.0752    static
2    port1.0.6     0030.846e.9bf4    dynamic
ARP  -             0000.cd00.0000    static
```

Also note manually configured static mac-addresses are shown to the right of the type column:

```
awplus(config)#mac address-table static 0000.1111.2222 for int
port1.0.3 vlan 2
awplus(config)#end
awplus#
awplus#show mac address-table

VLAN Port          MAC               State
1    unknown       0000.cd28.0752    static
1    port1.0.2     0030.846e.bac7    dynamic
2    port1.0.3     0000.1111.2222    static
2    unknown       0000.cd28.0752    static
2    port1.0.5     0030.846e.9bf4    dynamic
ARP  -             0000.cd00.0000    static
```

Related Commands

clear mac address-table dynamic

clear mac address-table static

mac address-table static

show platform

Overview This command displays the settings configured by using the **platform** commands.

Syntax

```
show platform
```

Mode Privileged Exec

Usage This command displays the settings in the running config. For changes in some of these settings to take effect, the device must be rebooted with the new settings in the startup config.

Example To check the settings configured with **platform** commands on the device, use the following command:

```
awplus# show platform
```

Output Figure 13-3: Example output from the **show platform** command

```
awplus#show platform
MAC vlan hashing algorithm    unknown
```

Table 1: Parameters in the output of the **show platform** command

Parameter	Description
MAC vlan hashing algorithm	The MAC VLAN hash-key-generating algorithm. This setting is unused.

show platform port

Overview This command displays the various port registers or platform counters for specified switchports.

Syntax

```
show platform port [<port-list>|counters]
```

Parameter	Description
<port-list>	The ports to display information about. A port-list can be: • a continuous range of ports separated by a hyphen, e.g. `port1.0.1-1.0.6` • a comma-separated list of ports and port ranges, e.g. `port1.0.1,port1.0.4-1.0.6`.
`counters`	Show the platform counters.

Mode Privileged Exec

Examples To display port registers for port1.0.1 and port1.0.2 use the following command:

```
awplus# show platform port port1.0.1-port1.0.2
```

To display platform counters for port1.0.1 and port1.0.2 use the following command:

```
awplus# show platform port port1.0.1-port1.0.2 counters
```

Output Figure 13-4: Example output from the **show platform port** command

```
awplus#show platform port port1.0.1
Phy register value for port1.0.1 (ifindex: 5001)

00:1140  01:7949  02:0362  03:5e14  04:01e1  05:0000  06:0064  07:2001
08:0000  09:0600  0a:0000  0b:0000  0c:0000  0d:4007  0e:0000  0f:3000
10:0020  11:0000  12:0000  13:0000  14:0000  15:0000  16:0000  17:0000
18:7277  19:1000  1a:0000  1b:ffff  1c:6cc7  1d:0000  1e:0000  1f:0000
sfp phy
00:1140  01:7949  02:0362  03:5e14  04:01e1  05:0000  06:0064  07:2001
08:0000  09:0600  0a:0000  0b:0000  0c:0000  0d:4007  0e:0000  0f:3000
10:0020  11:0000  12:0000  13:0000  14:0000  15:0000  16:0000  17:0000
18:7277  19:1000  1a:0000  1b:ffff  1c:6cc7  1d:0000  1e:0000  1f:0000


Port configuration for lport 0x08000000:
Phy Driver: 54680 Gigabit PHY Driver
  enabled:                1
  loopback:               0
  link:                   0
  speed:                  0  max speed:               1000
  duplex:                 0
  linkscan:               1
  autonegotiate:          1
  master:                 2
  tx pause:               0  rx pause:                   0
  untagged vlan:          1
  vlan filter:            1
  stp state:              1
  learn:                  5
  discard:                0
  jam:                    0
  max frame size:      1518
  MC Disable SA:         no
  MC Disable TTL:        no
  MC egress untag:        0
  MC egress vid:          0
  MC TTL threshold:       0
```

Table 2: Parameters in the output from the **show platform port** command

Parameter	Description
Ethernet MAC counters	
`Combined receive/ transmit packets by size (octets) counters`	Number of packets in each size range received and transmitted.
`64`	Number of 64 octet packets received and transmitted.
`65 - 127`	Number of 65 - 127 octet packets received and transmitted.

Table 2: Parameters in the output from the **show platform port** command

Parameter	Description
128 - 255	Number of 128 - 255 octet packets received and transmitted.
256 - 511	Number of 256 - 511 octet packets received and transmitted.
512 - 1023	Number of 512 - 1023 octet packets received and transmitted.
1024 - MaxPktSz	Number of packets received and transmitted with size 1024 octets to the maximum packet length.
1519 - 1522	Number of 1519 - 1522 octet packets received and transmitted.
1519 - 2047	Number of 1519 - 2047 octet packets received and transmitted.
2048 - 4095	Number of 2048 - 4095 octet packets received and transmitted.
4096 - 9216	Number of 4096 - 9216 octet packets received and transmitted.
General Counters	
Receive	Counters for traffic received.
Octets	Number of octets received.
Pkts	Number of packets received.
FCSErrors	Number of FCS (Frame Check Sequence) error events received.
UnicastPkts	Number of unicast packets received.
MulticastPkts	Number of multicast packets received.
BroadcastPkts	Number of broadcast packets received.
PauseMACCtlFrms	Number of Pause MAC Control Frames received.
OversizePkts	Number of oversize packets received.
Fragments	Number of fragments received.
Jabbers	Number of jabber frames received.
UnsupportOpcode	Number of MAC Control frames with unsupported opcode received.
AlignmentErrors	Receive Alignment Error Frame Counter.

Table 2: Parameters in the output from the **show platform port** command

Parameter	Description
SysErDurCarrier	Receive Code Error Counter.
CarrierSenseErr	Receive False Carrier Counter.
UndersizePkts	Number of undersized packets received.
Transmit	Counters for traffic transmitted.
Octets	Number of octets transmitted.
Pkts	Number of packets transmitted.
UnicastPkts	Number of unicast packets transmitted.
MulticastPkts	Number of multicast packets transmitted.
BroadcastPkts	Number of broadcast packets transmitted.
PauseMACCtlFrms	Number of Pause MAC Control Frames transmitted.
OversizePkts	Number of oversize packets transmitted.
FrameWDeferrdTx	Transmit Single Deferral Frame counter.
FrmWExcesDefer	Transmit Multiple Deferral Frame counter.
SingleCollsnFrm	Transmit Single Collision Frame counter.
MultCollsnFrm	Transmit Multiple Collision Frame counter.
LateCollisions	Transmit Late Collision Frame counter.
ExcessivCollsns	Transmit Excessive Collision Frame counter.
Collisions	Transmit Total Collision counter
Layer 3 Counters	
ifInUcastPkts	Inbound interface Unicast counter.
ifInDiscards	Inbound interface Discarded Packets counter.
ipInHdrErrors	Inbound interface Header Errors counter.
ifOutUcastPkts	Outbound interface Unicast counter.
ifOutErrors	Outbound interface Error counter.
Miscellaneous Counters	
DropEvents	Drop Event counter

Table 2: Parameters in the output from the **show platform port** command

Parameter	Description
`ifOutDiscards`	Outbound interface Discarded Packets counter.
`MTUExcdDiscard`	Receive MTU Check Error Frame Counter

show storm-control

Overview Use this command to display storm-control information for all interfaces or a particular interface.

Syntax

```
show storm-control [<port>]
```

Parameter	Description
<port>	The port to display information about. The port may be a switch port (e.g. port1.0.4), a static channel group (e.g. sa2), or a dynamic (LACP) channel group (e.g. po2).

Mode User Exec and Privileged Exec

Example To display storm-control information for port1.0.2, use the following command:

```
awplus# show storm-control port1.0.2
```

Output Figure 13-5: Example output from the **show storm-control** command for port1.0.2

```
Port       BcastLevel  McastLevel  DlfLevel
port1.0.2      40. 0%     100. 0%   100. 0%
```

Related Commands storm-control level

speed

Overview This command changes the speed of the specified port. You can optionally specify the speed or speeds that get autonegotiated, so autonegotiation is only attempted at the specified speeds.

To see the currently-negotiated speed for ports whose links are up, use the show interface command. To see the configured speed (when different from the default), use the show running-config command.

Syntax

```
speed {10|100|1000}
speed auto [10] [100] [1000]
```

The following table shows the speed options for each type of port.

Port type	Speed Options (units are Mbps)

RJ-45 copper ports	`auto` (default)
	`10`
	`100`
	`1000`

Mode Interface Configuration

Default By default, ports autonegotiate speed.

Usage Switch ports in a static or dynamic (LACP) channel group must have the same port speed and be in full duplex mode. Once switch ports have been aggregated into a channel group, you can set the speed of all the switch ports in the channel group by applying this command to the channel group.

NOTE: *If multiple speeds are specified after the auto option to autonegotiate speeds, then the device only attempts autonegotiation at those specified speeds.*

Examples To set the speed of a tri-speed port to 100Mbps, enter the following commands:

```
awplus# configure terminal
awplus(config)# interface port1.0.2
awplus(config-if)# speed 100
```

To return the port to auto-negotiating its speed, enter the following commands:

```
awplus# configure terminal
awplus(config)# interface port1.0.2
awplus(config-if)# speed auto
```

To set the port to auto-negotiate its speed at 100Mbps and 1000Mbps, enter the following commands:

```
awplus# configure terminal
awplus(config)# interface port1.0.2
awplus(config-if)# speed auto 100 1000
```

To set the port to auto-negotiate its speed at 1000Mbps only, enter the following commands:

```
awplus# configure terminal
awplus(config)# interface port1.0.2
awplus(config-if)# speed auto 1000
```

Related Commands

duplex

polarity

show interface

speed (asyn)

storm-control level

Overview Use this command to specify the speed limiting level for broadcasting, multicast, or destination lookup failure (DLF) traffic for the port. Storm-control limits the selected traffic type to the specified percentage of the maximum port speed.

Use the **no** variant of this command to disable storm-control for broadcast, multicast or DLF traffic.

Syntax

```
storm-control {broadcast|multicast|dlf} level <level>
no storm-control {broadcast|multicast|dlf} level
```

Parameter	Description
<level>	<0-100> Specifies the percentage of the maximum port speed allowed for broadcast, multicast or destination lookup failure traffic.
broadcast	Applies the storm-control to broadcast frames.
multicast	Applies the storm-control to multicast frames.
dlf	Applies the storm-control to destination lookup failure traffic.

Default By default, storm-control is disabled.

Mode Interface Configuration

Usage Flooding techniques are used to block the forwarding of unnecessary flooded traffic. A packet storm occurs when a large number of broadcast packets are received on a port. Forwarding these packets can cause the network to slow down or time out.

Example To limit broadcast traffic on port1.0.2 to 30% of the maximum port speed, use the following commands:

```
awplus# configure terminal
awplus(config)# interface port1.0.2
awplus(config-if)# storm-control broadcast level 30
```

Related Commands show storm-control

undebug platform packet

Overview This command applies the functionality of the no debug platform packet command.

14 Bridging Commands

Introduction

Overview This chapter provides an alphabetical reference of commands used to configure bridging. For more information, see the Bridging Commands Feature Overview and Configuration Guide.

Command List

- "ageing-time" on page 450
- "bridge" on page 451
- "bridge-group" on page 452
- "clear mac-filter" on page 453
- "l3-filtering enable" on page 454
- "mac-filter" on page 455
- "mac-filter-group" on page 456
- "mac-learning" on page 457
- "rule (MAC Filter)" on page 458
- "show bridge" on page 460
- "show bridge macaddr" on page 462
- "show mac-filter" on page 463

ageing-time

Overview This command specifies the time period that a learned MAC address will remain defined within the bridge's MAC address table.

Use the **no** variant of this command to set the ageing out time back to the default.

Syntax

```
ageing-time <10-1000000>
no ageing-time
```

Parameter	Description
<10-1000000>	The number of seconds that the MAC addresses will remain in the table.

Default 300 seconds (5 minutes)

Mode Interface Configuration

Examples To change the ageing time on br2 to 60 seconds (1 minute), use the following commands:

```
awplus#configure terminal
awplus(config)#interface br2
awplus(config-if)#ageing-time 60
```

To reset the ageing time back to its default, use the following commands:

```
awplus#configure terminal
awplus(config-if)#no ageing-time
```

To reset the ageing time back to its default, you can also use the following commands:

```
awplus#configure terminal
awplus(config-if)#ageing-time 300
```

Output None

Related Commands bridge

bridge-group

show bridge

show bridge macaddr

bridge

Overview Use this command to create a software bridge.

Use the **no** variant of this command to remove the specified bridge.

Syntax

```
bridge [<bridge-id>]
no bridge [<bridge-id>]
```

Parameter	Description
<bridge-id>	The bridge ID (from 1 to 64). This is made up of the bridge priority and the bridge's MAC address.

Default No configured bridges

Mode Global Configuration

Usage The bridge interface name will be prefixed with 'br' followed by the bridge ID.

If interfaces exist on a bridge, then the bridge cannot be removed. For example if interface eth1 exists on bridge 2, then the ***no bridge 2*** *command will give you the following message:*

```
% failed to remove interface br2, there are still configured
sub-interfaces.
```

Example To create a bridge with the ID of 2, use the following commands:

```
awplus#configure terminal
awplus(config)#bridge 2
```

To remove the bridge with the ID of 2, use the following commands:

```
awplus#configure terminal
awplus(config)##no bridge 2
```

Related Commands

ageing-time

bridge-group

show bridge

show bridge macaddr

bridge-group

Overview Use this command to add an interface to a bridge.

Use the **no** variant of this command to remove an interface from a bridge.

Syntax

```
bridge-group <1-64>
no bridge-group
```

Parameter	Description
<1-64>	The ID of the bridge that you are adding the interface to.

Default An interface is not part of any bridge by default.

Mode Interface configuration.

Usage Interfaces can only be part of one bridge, so when removing the bridge no parameters are required.

Interfaces that have been added to a bridge will lose their Layer 3 properties. The bridge will act as the Layer 3 interface. The bridge will provide Layer 2 connectivity between interfaces that are a part of the bridge.

You can only add eth, VLAN, OpenVPN (TAP only), and L2TPv3 ethernet pseudowire interfaces to your bridge.

Examples To add eth1 to bridge 2, use the following commands:

```
awplus#configure terminal
awplus(config)#interface eth1
awplus(config-if)#bridge-group 2
```

To remove eth1 from your bridge, use the following commands:

```
awplus#configure terminal
awplus(config)#interface eth1
awplus(config-if)#bridge-group
```

Related Commands

ageing-time

bridge

show bridge

show bridge macaddr

clear mac-filter

Overview This command clears all the mac-filter counters on a bridge.

Syntax

```
clear mac-filter counter bridge <bridge-id>
```

Parameter	Description
<bridge-id>	The bridge ID (from 1 to 64).

Default None

Mode Privileged Exec

Examples To clear the mac-filter counters on bridge 1, use the following commands:

```
awplus#clear mac-filter counter bridge 1
```

Output Figure 14-1: Example output from the **clear mac-filter bridge** command displaying information about all rules:

```
Clears filter counters on bridge interface br1
```

Related Commands

mac-filter

mac-filter-group

show mac-filter

l3-filtering enable

Overview Use this command to enable traffic control for bridged traffic on a bridge interface.

Use the **no** variant of this command to disable traffic control for bridged traffic on a bridge interface.

Syntax

```
l3-filtering enable
no l3-filtering enable
```

Default Traffic control is disabled by default for bridged traffic.

Mode Interface mode for a bridge interface

Example To enable traffic control for bridged traffic on br1, use the commands:

```
awplus# configure terminal
awplus(config)# interface br1
awplus(config-if)# l3-filtering enable
```

Related Commands traffic-control

Command changes Version 5.4.7-0.1: command added. Previously, traffic control was enabled by default on all bridge interfaces.

mac-filter

Overview This command creates a Layer 2 MAC filter that can be applied on a bridge.

Use the **no** variant of this command to remove the MAC filter.

Syntax

```
mac-filter [<mac-filter-name>]
no mac-filter [<mac-filter-name>]
```

Parameter	Description
<mac-filter-name>	The name of the mac-filter (maximum of 16 characters).

Default None

Mode Interface Configuration

Usage You can only create one MAC filter at one time.

Examples To create a mac-filter with the name of ATL-router1,use the following commands:

```
awplus#configure terminal
awplus(config)#mac-filter ATL-router1
```

To delete a mac-filter, use the following commands:

```
awplus#configure terminal
awplus(config)#no mac-filter ATL-router1
```

Output None

Related Commands

clear mac-filter

mac-filter-group

show mac-filter

mac-filter-group

Overview This command applies a Layer two MAC filter on a bridge.

Use the **no** variant of this command to remove the mac-filter on a bridge.

Syntax

```
mac-filter-group [<mac-filter-name>]
no mac-filter-group
```

Parameter	Description
<mac-filter-name>	The name of the mac-filter (maximum 16 characters).

Default None

Mode Interface Configuration

Usage You can only apply one MAC filter at one time.

Examples To apply a mac-filter with the name of ATL-router1 on bridge interface br1,use the following commands:

```
awplus#configure terminal
awplus(config)#interface br1
awplus(config-if)#mac-filter-group ATL-router1
```

To remove the mac-filter on a bridge, use the following commands:

```
awplus#configure terminal
awplus(config)#interface br1
awplus(config-if)#no mac-filter-group
```

Output Figure 14-2: Example output from the **mac-filter-group** command displaying information about all bridges:

```
mac-filter "ATL-router1" will be applied to the bridge interface
br1
```

Related Commands

clear mac-filter

mac-filter

show mac-filter

mac-learning

Overview Use this command to enable FDB MAC address learning on a bridge interface. In some circumstances, FDB MAC address learning on a software-based router bridge is not useful, and it is better to flood the traffic within interfaces associated with the bridge instance, to ensure the traffic reaches its destination.

Use the **no** variant of this command to disable or enable FDB MAC address learning on a bridge.

Syntax

```
mac-learning
no mac-learning
```

Default Learning is enabled by default.

Mode Interface mode for a bridge interface

Example To turn off learning on bridge 2, use the following commands:

```
awplus# configure terminal
awplus(config)# interface br2
awplus(config-if)# no mac-learning
```

To turn learning on bridge 2 back on, use the following commands:

```
awplus# configure terminal
awplus(config)# interface br2
awplus(config-if)# mac-learning
```

Command changes Version 5.4.7-0.1: command added

rule (MAC Filter)

Syntax This command adds a filter rule to a mac-filter. You can also add further rules to rules that you have already specified.

Use the **no** variant of this command to remove a rule.

Syntax

```
rule <rule-name> {deny|permit} [dmac {<MAC>|any}] [smac
{<MAC>|any}] [proto {<rule-name>|any}] [{after|before} rule
<rule-name>]
```

```
no rule <rule-name>
```

Parameter	Description
<rule-name>	The name of the rule (maximum 16 characters).
deny	Drop the matched frame.
permit	Allow the matched frame.
dmac	Destination MAC address.
<MAC>	MAC address in HHHH.HHHH.HHHH format.
any	any MAC address.
smac	Source MAC address.
proto	Ethernet protocol type.
after	Insert a rule before an existing rule.
before	Insert a rule after an existing rule.
rule	MAC filter rule.

Default No rule

Mode MAC Filter Mode

Examples To add a rule called PC1 to a mac-filter-group called ATL-router1,use the following commands:

```
awplus#configure terminal
awplus(config)#mac-filter ATL-router1
awplus(config-macfilter)#rule PC1 permit dmac any smac
00c4.6d20.c0f4 proto any
```

To reset a mac-filter back to its default, use the following commands:

```
awplus#configure terminal
awplus(config)#mac-filter ATL-router1
awplus(config-macfilter)#no rule PC1
```

Output Figure 14-3: Example output from the **rule** command displaying information about all rules:

```
rule "PC1" will be added to the specified mac-filter.
```

Related Commands

clear mac-filter

mac-filter

mac-filter-group

show mac-filter

show bridge

Syntax Use this command to display detailed information about your bridge(s).

Syntax `show bridge [<bridge-list>]`

Parameter	Description
<bridge-list>	The bridge/s to display the information about. The <*bridge-list*> can be: • a single bridge(e.g. br2) • a continuous range of bridges (e.g. br1-3) • a comma separated list of bridges and/or ranges (e.g. br1,br2,br3-br5)

Default Displays detailed information about all bridges, if no <*bridge-list*> is specified.

Mode Privileged Exec

Examples To display information about all bridges, use the following command:

```
awplus#show bridge
```

To display information about bridge 2, use the following command:

```
awplus#show bridge br2
```

To display information about bridge in the range 1 to 3, use the following command:

```
awplus#show bridge br1-3
```

To display information about bridges 1, and from 3 to 5, use the following command:

```
awplus#show bridge br1,br3-5
```

Output Figure 14-4: Example output from the **show bridge** command displaying information about all bridges:

```
awplus#show bridge
Bridge Name     Aging Timer     Interfaces
----------------------------------------
br1                     300     eth1
br2                     300     vlan1
                                eth2
br3                     300
br4                     300
br5                     300
```

Figure 14-5: Example output from the **show bridge** command displaying information about bridge 2.

```
awplus#show bridge br2
Bridge Name     Aging Timer     Interfaces
----------------------------------------
br2             300             vlan1
                                eth2
```

Related Commands

ageing-time

bridge

bridge-group

show bridge macaddr

show bridge macaddr

Overview Use this command to display the MAC entries learned in the MAC table for your bridge.

Syntax

```
show bridge macaddr <bridge-list>
```

Parameter	Description
<bridge-list>	The bridge interfaces to display the information about. The *<bridge-list>* can be: • a single bridge(e.g. br2) • a continuous range of bridges (e.g. br1-3) • a comma separated list of bridges and/or ranges (e.g. br1,br2,br3-br5)

Mode Global Configuration

Example To display the learned MAC entries for bridge 2, use the following commands:

```
awplus#configure terminal
awplus(config)#show bridge macaddr br2
```

Output Figure 14-6: Example output from the **show bridge macaddr** command displaying information about bridge 2:

```
awplus#show bridge macaddr br2
Bridge Name    Interface       mac addr              is local?   ageing
-------------------------------------------------------------------------
br2            vlan10          ec:cd:6d:20:c0:fb     no          41
br2            vlan50          00:c4:6d:20:c0:e6     no           0
br2            vlan50          00:c4:6d:20:c0:e7     no           1
br2            vlan50          00:c4:6d:20:c0:e8     no           2
br2            vlan50          00:c4:6d:20:c0:f2     no          12
br2            vlan50          00:c4:6d:20:c0:f3     no          13
br2            vlan50          00:c4:6d:20:c0:f4     no          14
br2            vlan50          ec:cd:6d:20:c0:bd     yes          0
br2            vlan50          ec:cd:6d:48:e4:72     no          41
```

Related Commands

ageing-time

bridge

bridge-group

show bridge

show mac-filter

Overview This command displays all hit counters for all MAC filter rules applied to a bridge.

Syntax

```
show mac-filter [bridge <bridge-id>]
```

Parameter	Description
<bridge-id>	The bridge ID (from 1 to 16).

Default Displays all counters for all mac-filters on a bridge

Mode Privileged Exec Mode

Examples To display all mac-filter bridge counters, use the following commands:

```
awplus#show mac-filter
```

To display mac-filter bridge counters for bridge 2, use the following commands:

```
awplus#show mac-filter bridge 2
```

Output Figure 14-7: Example output from the **show mac-filter bridge** command displaying information about all rules:

```
awplus#show mac-filter
Bridge   Rule        DMAC           SMAC           Pkt Count    Byte Count
-------------------------------------------------------------------------
br1      DENY_1      any            0000.1111.2222     112          148312
br1      DENY_2      aabb.ccdd.eeff 1234.5678.9123      30           40462
br1      PERMIT      any            any               2261         3364302
br2      BROADCAST   ffff.ffff.ffff any                 54            6653
br2      DENY_IPv6   any            any               1057          972605
br2      DENY_USER   any            aabb.ccdd.eeff     365          447433
br2      PERMIT      any            any              32581        36648579
```

Related Commands mac-filter

mac-filter-group

15 VLAN Commands

Introduction

Overview This chapter provides an alphabetical reference of commands used to configure VLANs. For more information see the VLAN Feature Overview and Configuration Guide.

Command List

- "show vlan" on page 465
- "switchport access vlan" on page 466
- "switchport mode access" on page 467
- "switchport mode trunk" on page 468
- "switchport trunk allowed vlan" on page 469
- "switchport trunk native vlan" on page 472
- "vlan" on page 473
- "vlan database" on page 474

show vlan

Overview Use this command to display information about a particular VLAN by specifying its VLAN ID. Selecting **all** will display information for all the VLANs configured.

Syntax
```
show vlan
{all|brief|dynamic|static|auto|static-ports|<1-4094>}
```

Parameter	Description
<1-4094>	Display information about the VLAN specified by the VLAN ID.
`all`	Display information about all VLANs on the device.
`brief`	Display information about all VLANs on the device.
`dynamic`	Display information about all VLANs learned dynamically.
`static`	Display information about all statically configured VLANs.
`auto`	Display information about all auto-configured VLANs.
`static-ports`	Display static egress/forbidden ports.

Mode User Exec and Privileged Exec

Example To display information about VLAN 2, use the command:

```
awplus# show vlan 2
```

Output Figure 15-1: Example output from the **show vlan** command

```
VLAN ID  Name            Type    State   Member ports
                                         (u)-Untagged, (t)-Tagged
======= ================ ======= ======= ====================================
2       VLAN0002         STATIC  ACTIVE  port1.0.3(u) port1.0.4(u) port1.0.5(u)
                                         port1.0.6(u)
...
```

Related Commands vlan

switchport access vlan

Overview Use this command to change the port-based VLAN of the current port.

Use the **no** variant of this command to change the port-based VLAN of this port to the default VLAN, vlan1.

Syntax

```
switchport access vlan <vlan-id>
no switchport access vlan
```

Parameter	Description
<vlan-id>	<1-4094> The port-based VLAN ID for the port.

Default Reset the default VLAN 1 to specified switchports using the negated form of this command.

Mode Interface Configuration

Usage Any untagged frame received on this port will be associated with the specified VLAN.

Examples To change the port-based VLAN to VLAN 3 for port1.0.2, use the commands:

```
awplus# configure terminal
awplus(config)# interface port1.0.2
awplus(config-if)# switchport access vlan 3
```

To reset the port-based VLAN to the default VLAN 1 for port1.0.2, use the commands:

```
awplus# configure terminal
awplus(config)# interface port1.0.2
awplus(config-if)# no switchport access vlan
```

Related Commands show interface switchport

show vlan

switchport mode access

Overview Use this command to set the switching characteristics of the port to access mode. Received frames are classified based on the VLAN characteristics, then accepted or discarded based on the specified filtering criteria.

Syntax

```
switchport mode access [ingress-filter {enable|disable}]
```

Parameter	Description
`ingress-filter`	Set the ingress filtering for the received frames.
`enable`	Turn on ingress filtering for received frames. This is the default.
`disable`	Turn off ingress filtering to accept frames that do not meet the classification criteria.

Default By default, ports are in access mode with ingress filtering on.

Usage Use access mode to send untagged frames only.

Mode Interface Configuration

Example

```
awplus# configure terminal
awplus(config)# interface port1.0.2
awplus(config-if)# switchport mode access ingress-filter enable
```

Validation Command show interface switchport

switchport mode trunk

Overview Use this command to set the switching characteristics of the port to trunk. Received frames are classified based on the VLAN characteristics, then accepted or discarded based on the specified filtering criteria.

Syntax

```
switchport mode trunk [ingress-filter {enable|disable}]
```

Parameter	Description
`ingress-filter`	Set the ingress filtering for the frames received.
`enable`	Turn on ingress filtering for received frames. This is the default.
`disable`	Turn off ingress filtering to accept frames that do not meet the classification criteria.

Default By default, ports are in access mode, are untagged members of the default VLAN (vlan1), and have ingress filtering on.

Mode Interface Configuration

Usage A port in trunk mode can be a tagged member of multiple VLANs, and an untagged member of one native VLAN.

To configure which VLANs this port will trunk for, use the switchport trunk allowed vlan command.

Example

```
awplus# configure terminal
awplus(config)# interface port1.0.3
awplus(config-if)# switchport mode trunk ingress-filter enable
```

Validation Command show interface switchport

switchport trunk allowed vlan

Overview Use this command to add VLANs to be trunked over this switch port. Traffic for these VLANs can be sent and received on the port.

Use the **no** variant of this command to reset switching characteristics of a specified interface to negate a trunked configuration specified with **switchport trunk allowed vlan** command.

Syntax

```
switchport trunk allowed vlan all
switchport trunk allowed vlan none
switchport trunk allowed vlan add <vid-list>
switchport trunk allowed vlan remove <vid-list>
switchport trunk allowed vlan except <vid-list>
no switchport trunk
```

Parameter	Description
`all`	Allow all VLANs to transmit and receive through the port.
`none`	Allow no VLANs to transmit and receive through the port.
`add`	Add a VLAN to the list of VLANs that are allowed to transmit and receive through the port. Only use this parameter if a list of VLANs is already configured on a port.
`remove`	Remove a VLAN from the list of VLANs that are allowed to transmit and receive through the port. Only use this parameter if a list of VLANs is already configured on a port. If you are removing VLAN port membership for a large number of switchports and VLANs, note that this command may take a number of minutes to run.
`except`	All VLANs, except the VLAN for which the VID is specified, are part of its port member set. Only use this parameter to remove VLANs after either this parameter or the **all** parameter have added VLANs to a port.
<vid-list>	<2-4094> The ID of the VLAN or VLANs that will be added to, or removed from, the port. A single VLAN, VLAN range, or comma-separated VLAN list can be set. For a VLAN range, specify two VLAN numbers: lowest, then highest number in the range, separated by a hyphen. For a VLAN list, specify the VLAN numbers separated by commas. Do not enter spaces between hyphens or commas when setting parameters for VLAN ranges or lists.

Default By default, ports are untagged members of the default VLAN (vlan1).

Mode Interface Configuration

Usage The **all** parameter sets the port to be a tagged member of all the VLANs configured on the device. The **none** parameter removes all VLANs from the port's tagged member set. The **add** and **remove** parameters will add and remove VLANs to and from the port's member set. The **except** parameter creates an exception to the list.

If you use the **all** parameter, and then you want to remove VLANs from the port's member list, you must use the **except** parameter to remove the unwanted VLANs. Similarly, if you use the **except** parameter to remove a list of VLANs, and you want to change that list, you must use the **except** parameter to make that change (not the **add** and **remove** parameters).

For example, if you want to remove VLAN3-5 from a port and the port's configuration is currently **switchport trunk allowed vlan all**, then you should remove VLAN3-5 by entering the **except** parameter, instead of using the **remove** parameter. This means using the following commands:

```
awplus# configure terminal
awplus(config)# interface port1.0.6
awplus(config-if)# switchport trunk allowed vlan except 3-5
```

If you do this, then the configuration changes to:

```
awplus#show running-config

interface port1.0.6
switchport
switchport mode trunk
switchport trunk allowed vlan except 3-5
```

For example, if you want to add VLAN4 back in again, and the port configuration is currently **switchport trunk allowed vlan except 3-5**, then you should add VLAN4 by re-entering the **except** parameter with the list of VLANs to remove, instead of using the **add** parameter. This means using the following commands:

```
awplus# configure terminal
awplus(config)# interface port1.0.5
awplus(config-if)# switchport trunk allowed vlan except 3,5
```

If you do this, then the configuration changes to:

```
awplus#show running-config

interface port1.0.5
switchport
switchport mode trunk
switchport trunk allowed vlan except 3,5
```

Examples The following shows adding a single VLAN to the port's member set.

```
awplus# configure terminal
awplus(config)# interface port1.0.2
awplus(config-if)# switchport trunk allowed vlan add 2
```

The following shows adding a range of VLANs to the port's member set.

```
awplus# configure terminal
awplus(config)# interface port1.0.2
awplus(config-if)# switchport trunk allowed vlan add 2-4
```

The following shows adding a list of VLANs to the port's member set.

```
awplus# configure terminal
awplus(config)# interface port1.0.2
awplus(config-if)# switchport trunk allowed vlan add 2,3,4
```

switchport trunk native vlan

Overview Use this command to configure the native VLAN for this port. The native VLAN is used for classifying the incoming untagged packets. Use the **none** parameter with this command to remove the native VLAN from the port and set the acceptable frame types to vlan-tagged only.

Use the **no** variant of this command to revert the native VLAN to the default VLAN ID 1. Command negation removes tagged VLANs, and sets the native VLAN to the default VLAN.

Syntax

```
switchport trunk native vlan {<vid>|none}
no switchport trunk native vlan
```

Parameter	Description
<vid>	The ID of the VLAN that will be used to classify the incoming untagged packets, in the range 2-2094. The VLAN ID must be a part of the VLAN member set of the port.
none	No native VLAN specified. This option removes the native VLAN from the port and sets the acceptable frame types to vlan-tagged only. Note: Use the **no** variant of this command to revert to the default VLAN 1 as the native VLAN for the specified interface switchport - not **none**.

Default VLAN 1 (the default VLAN), which is reverted to using the **no** form of this command.

Mode Interface Configuration

Examples The following commands show configuration of VLAN 2 as the native VLAN for port1.0.2:

```
awplus# configure terminal
awplus(config)# interface port1.0.2
awplus(config-if)# switchport trunk native vlan 2
```

The following commands show the removal of the native VLAN for interface port1.0.2:

```
awplus# configure terminal
awplus(config)# interface port1.0.2
awplus(config-if)# switchport trunk native vlan none
```

The following commands revert the native VLAN to the default VLAN 1 for interface port1.0.2:

```
awplus# configure terminal
awplus(config)# interface port1.0.2
awplus(config-if)# no switchport trunk native vlan
```

vlan

Overview This command creates VLANs, assigns names to them, and enables or disables them. Disabling the VLAN causes all forwarding over the specified VLAN ID to cease. Enabling the VLAN allows forwarding of frames on the specified VLAN.

The **no** variant of this command destroys the specified VLANs or returns their MTU to the default.

Syntax

```
vlan <vid> [name <vlan-name>] [state {enable|disable}]
vlan <vid-range> [state {enable|disable}]
vlan {<vid>|<vlan-name>} [mtu <mtu-value>]
no vlan {<vid>|<vid-range>} [mtu]
```

Parameter	Description
<vid>	The VID of the VLAN to enable or disable, in the range 1-4094.
<vlan-name>	The ASCII name of the VLAN. Maximum length: 32 characters.
<vid-range>	Specifies a range of VLAN identifiers.
<mtu-value>	Specifies the Maximum Transmission Unit (MTU) size in bytes, in the range 68 to 1500 bytes, for the VLAN.
`enable`	Puts the VLAN into an enabled state.
`disable`	Puts the VLAN into a disabled state.

Default By default, VLANs are enabled when they are created.

Mode VLAN Configuration

Examples To enable vlan 45, use the commands:

```
awplus# configure terminal
awplus(config)# vlan database
awplus(config-vlan)# vlan 45 name accounts state enable
```

To destroy vlan 45, use the commands:

```
awplus# configure terminal
awplus(config)# vlan database
awplus(config-vlan)# no vlan 45
```

Related Commands

mtu

vlan database

show vlan

vlan database

Overview Use this command to enter the VLAN Configuration mode.

Syntax

```
vlan database
```

Mode Global Configuration

Usage Use this command to enter the VLAN configuration mode. You can then add or delete a VLAN, or modify its values.

Example In the following example, note the change to VLAN configuration mode from Configure mode:

```
awplus# configure terminal
awplus(config)# vlan database
awplus(config-vlan)#
```

Related Commands vlan

16 Spanning Tree Commands

Introduction

Overview This chapter provides an alphabetical reference for commands used to configure RSTP, STP or MSTP. For information about spanning trees, including configuration procedures, see the STP Feature Overview and Configuration Guide.

Command List

- "clear spanning-tree statistics" on page 477
- "clear spanning-tree detected protocols (RSTP and MSTP)" on page 478
- "debug mstp (RSTP and STP)" on page 479
- "instance priority (MSTP)" on page 483
- "instance vlan (MSTP)" on page 485
- "region (MSTP)" on page 487
- "revision (MSTP)" on page 488
- "show debugging mstp" on page 489
- "show spanning-tree" on page 490
- "show spanning-tree brief" on page 493
- "show spanning-tree mst" on page 494
- "show spanning-tree mst config" on page 495
- "show spanning-tree mst detail" on page 496
- "show spanning-tree mst detail interface" on page 498
- "show spanning-tree mst instance" on page 500
- "show spanning-tree mst instance interface" on page 501
- "show spanning-tree mst interface" on page 502
- "show spanning-tree mst detail interface" on page 503
- "show spanning-tree statistics" on page 505

- "show spanning-tree statistics instance" on page 507
- "show spanning-tree statistics instance interface" on page 508
- "show spanning-tree statistics interface" on page 510
- "show spanning-tree vlan range-index" on page 512
- "spanning-tree autoedge (RSTP and MSTP)" on page 513
- "spanning-tree cisco-interoperability (MSTP)" on page 514
- "spanning-tree edgeport (RSTP and MSTP)" on page 515
- "spanning-tree enable" on page 516
- "spanning-tree errdisable-timeout enable" on page 518
- "spanning-tree errdisable-timeout interval" on page 519
- "spanning-tree force-version" on page 520
- "spanning-tree forward-time" on page 521
- "spanning-tree guard root" on page 522
- "spanning-tree hello-time" on page 523
- "spanning-tree link-type" on page 524
- "spanning-tree max-age" on page 525
- "spanning-tree max-hops (MSTP)" on page 526
- "spanning-tree mode" on page 527
- "spanning-tree mst configuration" on page 528
- "spanning-tree mst instance" on page 529
- "spanning-tree mst instance path-cost" on page 530
- "spanning-tree mst instance priority" on page 532
- "spanning-tree mst instance restricted-role" on page 533
- "spanning-tree mst instance restricted-tcn" on page 535
- "spanning-tree path-cost" on page 536
- "spanning-tree portfast (STP)" on page 537
- "spanning-tree portfast bpdu-filter" on page 539
- "spanning-tree portfast bpdu-guard" on page 541
- "spanning-tree priority (bridge priority)" on page 543
- "spanning-tree priority (port priority)" on page 544
- "spanning-tree restricted-role" on page 545
- "spanning-tree restricted-tcn" on page 546
- "spanning-tree transmit-holdcount" on page 547
- "undebug mstp" on page 548

clear spanning-tree statistics

Overview Use this command to clear all the STP BPDU (Bridge Protocol Data Unit) statistics.

Syntax

```
clear spanning-tree statistics
clear spanning-tree statistics [instance <mstp-instance>]
clear spanning-tree statistics [interface <port> [instance
<mstp-instance>]]
```

Parameter	Description
<port>	The port to clear STP BPDU statistics for. The port may be a switch port (e.g. `port1.0.4`), a static channel group (e.g. `sa2`), or a dynamic (LACP) channel group (e.g. `po2`).
<mstp-instance>	The MSTP instance (MSTI - Multiple Spanning Tree Instance) to clear MSTP BPDU statistics.

Mode User Exec and Privileged Exec

Usage Use this command with the **instance** parameter in MSTP mode. Specifying this command with the **interface** parameter only not the instance parameter will work in STP and RSTP mode.

Examples

```
awplus# clear spanning-tree statistics
awplus# clear spanning-tree statistics instance 1
awplus# clear spanning-tree statistics interface port1.0.2
awplus# clear spanning-tree statistics interface port1.0.2
instance 1
```

clear spanning-tree detected protocols (RSTP and MSTP)

Overview Use this command to clear the detected protocols for a specific port, or all ports.

Use this command in RSTP or MSTP mode only.

Syntax `clear spanning-tree detected protocols [interface <port>]`

Parameter	Description
<port>	The port to clear detected protocols for. The port may be a switch port (e.g. `port1.0.4`), a static channel group (e.g. `sa2`), or a dynamic (LACP) channel group (e.g. `po2`).

Mode Privileged Exec

Example
```
awplus# clear spanning-tree detected protocols
```

debug mstp (RSTP and STP)

Overview Use this command to enable debugging for the configured spanning tree mode, and echo data to the console, at various levels. Note that although this command uses the keyword **mstp** it displays debugging output for RSTP and STP protocols as well the MSTP protocol.

Use the **no** variant of this command to disable spanning tree debugging.

Syntax

```
debug mstp {all|cli|protocol [detail]|timer [detail]}
debug mstp {packet {rx|tx} [decode] [interface <interface>]}
debug mstp {topology-change [interface <interface>]}
no debug mstp {all|cli|protocol [detail]|timer [detail]}
no debug mstp {packet {rx|tx} [decode] [interface <interface>]}
no debug mstp {topology-change [interface <interface>]}
```

Parameter	Description
`all`	Echoes all spanning tree debugging levels to the console.
`cli`	Echoes spanning tree commands to the console.
`packet`	Echoes spanning tree packets to the console.
`rx`	Received packets.
`tx`	Transmitted packets.
`protocol`	Echoes protocol changes to the console.
`timer`	Echoes timer information to the console.
`detail`	Detailed output.
`decode`	Interprets packet contents
`topology-change`	Interprets topology change messages
`interface`	Keyword before <interface> placeholder to specify an interface to debug
<interface>	Placeholder used to specify the name of the interface to debug.

Mode Privileged Exec and Global Configuration mode

Usage 1 Use the **debug mstp topology-change interface** command to generate debugging messages when the device receives an indication of a topology change in a BPDU from another device. The debugging can be activated on a per-port basis. Although this command uses the keyword **mstp**, it displays debugging output for RSTP and STP protocols as well as the MSTP protocol.

Due to the likely volume of output, these debug messages are best viewed using the terminal monitor command before issuing the relevant **debug mstp**

command. The default terminal monitor filter will select and display these messages. Alternatively, the messages can be directed to any of the other log outputs by adding a filter for the MSTP application using log buffered (filter) command:

```
awplus# configure terminal
awplus(config)# log buffered program mstp
```

Output 1

```
awplus#terminal monitor
awplus#debug mstp topology-change interface port1.0.4
10:09:09 awplus MSTP[1409]: Topology change rcvd on port1.0.4 (internal)
10:09:09 awplus MSTP[1409]: Topology change rcvd on MSTI 1 port1.0.4
aawplus#debug mstp topology-change interface port1.0.6
10:09:29 awplus MSTP[1409]: Topology change rcvd on port1.0.6 (external)
10:09:29 awplus MSTP[1409]: Topology change rcvd on MSTI 1 port1.0.6
```

Usage 2 Use the **debug mstp packet rx|tx decode interface** command to generate debugging messages containing the entire contents of a BPDU displayed in readable text for transmitted and received xSTP BPDUs. The debugging can be activated on a per-port basis and transmit and receive debugging is controlled independently. Although this command uses the keyword **mstp**, it displays debugging output for RSTP and STP protocols as well as the MSTP protocol.

Due to the likely volume of output, these debug messages are best viewed using the terminal monitor command before issuing the relevant **debug mstp** command. The default terminal monitor filter will select and display these messages. Alternatively, the messages can be directed to any of the other log outputs by adding a filter for the MSTP application using the log buffered (filter) command:

```
awplus(config)# log buffered program mstp
```

Output 2 In MSTP mode - an MSTP BPDU with 1 MSTI:

```
awplus#terminal monitor
awplus#debug mstp packet rx decode interface port1.0.4
17:23:42 awplus MSTP[1417]: port1.0.4 xSTP BPDU rx - start
17:23:42 awplus MSTP[1417]: Protocol version: MSTP, BPDU type: RST
17:23:42 awplus MSTP[1417]: CIST Flags:  Agree Forward Learn role=Desig
17:23:42 awplus MSTP[1417]: CIST root id      : 0000:0000cd1000fe
17:23:42 awplus MSTP[1417]: CIST ext pathcost : 0
17:23:42 awplus MSTP[1417]: CIST reg root id  : 0000:0000cd1000fe
17:23:42 awplus MSTP[1417]: CIST port id      : 8001 (128:1)
17:23:42 awplus MSTP[1417]: msg age: 0 max age: 20 hellotime: 2 fwd delay: 15
17:23:42 awplus MSTP[1417]: Version 3 length : 80
17:23:42 awplus MSTP[1417]: Format id      : 0
17:23:42 awplus MSTP[1417]: Config name    : test
17:23:42 awplus MSTP[1417]: Revision level : 0
17:23:42 awplus MSTP[1417]: Config digest  : 3ab68794d602fdf43b21c0b37ac3bca8
17:23:42 awplus MSTP[1417]: CIST int pathcost : 0
17:23:42 awplus MSTP[1417]: CIST bridge id    : 0000:0000cd1000fe
17:23:42 awplus MSTP[1417]: CIST hops remaining : 20
17:23:42 awplus MSTP[1417]: MSTI flags           : Agree Forward Learn role=Desig
17:23:42 awplus MSTP[1417]: MSTI reg root id     : 8001:0000cd1000fe
17:23:42 awplus MSTP[1417]: MSTI pathcost        : 0
17:23:42 awplus MSTP[1417]: MSTI bridge priority : 32768 port priority : 128
17:23:42 awplus MSTP[1417]: MSTI hops remaining  : 20
17:23:42 awplus MSTP[1417]: port1.0.4 xSTP BPDU rx - finish
```

In STP mode transmitting a TCN BPDU:

```
awplus#terminal monitor
awplus#debug mstp packet tx decode interface port1.0.4
17:28:09 awplus MSTP[1417]: port1.0.4 xSTP BPDU tx - start
17:28:09 awplus MSTP[1417]: Protocol version: STP, BPDU type: TCN
17:28:09 awplus MSTP[1417]: port1.0.4 xSTP BPDU tx - finish
```

In STP mode receiving an STP BPDU:

```
awplus#terminal monitor
awplus#debug mstp packet rx decode interface port1.0.4
17:31:36 awplus MSTP[1417]: port1.0.4 xSTP BPDU rx - start
17:31:36 awplus MSTP[1417]: Protocol version: STP, BPDU type: Config
17:31:36 awplus MSTP[1417]: Flags:  role=none
17:31:36 awplus MSTP[1417]: Root id      : 8000:0000cd1000fe
17:31:36 awplus MSTP[1417]: Root pathcost : 0
17:31:36 awplus MSTP[1417]: Bridge id  : 8000:0000cd1000fe
17:31:36 awplus MSTP[1417]: Port id      : 8001 (128:1)
17:31:36 awplus MSTP[1417]: msg age: 0 max age: 20 hellotime: 2 fwd delay: 15
17:31:36 awplus MSTP[1417]: ort1.0.4 xSTP BPDU rx - finish
```

In RSTP mode receiving an RSTP BPDU:

```
awplus#terminal monitor
awplus#debug mstp packet rx decode interface port1.0.4
awplus#17:30:17 awplus MSTP[1417]: port1.0.4 xSTP BPDU rx - start
17:30:17 awplus MSTP[1417]: Protocol version: RSTP, BPDU type: RST
17:30:17 awplus MSTP[1417]: CIST Flags:  Forward Learn role=Desig
17:30:17 awplus MSTP[1417]: CIST root id      : 8000:0000cd1000fe
17:30:17 awplus MSTP[1417]: CIST ext pathcost : 0
17:30:17 awplus MSTP[1417]: CIST reg root id  : 8000:0000cd1000fe
17:30:17 awplus MSTP[1417]: CIST port id      : 8001 (128:1)
17:30:17 awplus MSTP[1417]: msg age: 0 max age: 20 hellotime: 2 fwd delay: 15
17:30:17 awplus MSTP[1417]: port1.0.4 xSTP BPDU rx - finish
```

Examples

```
awplus# debug mstp all
awplus# debug mstp cli
awplus# debug mstp packet rx
awplus# debug mstp protocol detail
awplus# debug mstp timer
awplus# debug mstp packet rx decode interface port1.0.2
awplus# debug mstp packet tx decode interface port1.0.6
```

Related Commands

log buffered (filter)

show debugging mstp

terminal monitor

undebug mstp

instance priority (MSTP)

Overview Use this command to set the priority for this device to become the root bridge for the specified MSTI (Multiple Spanning Tree Instance).

Use this command for MSTP only.

Use the **no** variant of this command to restore the root bridge priority of the device for the instance to the default.

Syntax

```
instance <instance-id> priority <priority>
no instance <instance-id> priority
```

Parameter	Description
<instance-id>	Specify an MSTP instance in the range 1-5.
<priority>	Specify the root bridge priority for the device for the MSTI in the range <0-61440>. Note that a lower priority number indicates a greater likelihood of the device becoming the root bridge. The priority values can be set only in increments of 4096. If you specify a number that is not a multiple of 4096, it will be rounded down. The default priority is 32768.

Default The default priority value for all instances is 32768.

Mode MST Configuration

Usage MSTP lets you distribute traffic more efficiently across a network by blocking different links for different VLANs. You do this by making different devices into the root bridge for each MSTP instance, so that each instance blocks a different link.

If all devices have the same root bridge priority for the instance, MSTP selects the device with the lowest MAC address to be the root bridge. Give the device a higher priority for becoming the root bridge for a particular instance by assigning it a lower priority number, or vice versa.

Examples To set the root bridge priority for MSTP instance 2 to be the highest (0), so that it will be the root bridge for this instance when available, use the commands:

```
awplus# configure terminal
awplus(config)# spanning-tree mst configuration
awplus(config-mst)# instance 2 priority 0
```

To reset the root bridge priority for instance 2 to the default (32768), use the commands:

```
awplus# configure terminal
awplus(config)# spanning-tree mst configuration
awplus(config-mst)# no instance 2 priority
```

Related Commands

region (MSTP)

revision (MSTP)

show spanning-tree mst config

spanning-tree mst instance

spanning-tree mst instance priority

instance vlan (MSTP)

Overview Use this command to create an MST Instance (MSTI), and associate the specified VLANs with it. An MSTI is a spanning tree instance that exists within an MST region (MSTR).

When a VLAN is associated with an MSTI the member ports of the VLAN are automatically configured to send and receive spanning-tree information for the associated MSTI. You can disable this automatic configuration of member ports of the VLAN to the associated MSTI by using a **no spanning-tree mst instance** command to remove the member port from the MSTI.

Use the **instance vlan** command for MSTP only.

Use the **no** variant of this command to remove the specified VLANs from the MSTI.

Syntax

```
instance <instance-id> vlan <vid-list>
no instance <instance-id> vlan <vid-list>
```

Parameter	Description
<instance-id>	Specify an MSTP instance in the range 1-5.
<vid-list>	Specify one or more VLAN identifiers (VID) to be associated with the MSTI specified. This can be a single VID in the range 1-4094, or a hyphen-separated range or a comma-separated list of VLAN IDs.

Mode MST Configuration

Usage The VLANs must be created before being associated with an MST instance (MSTI). If the VLAN range is not specified, the MSTI will not be created.

This command removes the specified VLANs from the CIST and adds them to the specified MSTI. If you use the **no** variant of this command to remove the VLAN from the MSTI, it returns it to the CIST. To move a VLAN from one MSTI to another, you must first use the **no** variant of this command to return it to the CIST.

Ports in these VLANs will remain in the control of the CIST until you associate the ports with the MSTI using the spanning-tree mst instance command.

Example To associate VLAN 30 with MSTI 2, use the commands:

```
awplus# configure terminal
awplus(config)# spanning-tree mode mstp
awplus(config)# spanning-tree mst configuration
awplus(config-mst)# instance 2 vlan 30
```

Related Commands

region (MSTP)

revision (MSTP)

show spanning-tree mst config

spanning-tree mst instance

vlan

region (MSTP)

Overview Use this command to assign a name to the device's MST Region. MST Instances (MSTI) of a region form different spanning trees for different VLANs.

Use this command for MSTP only.

Use the **no** variant of this command to remove this region name and reset it to the default.

Syntax

```
region <region-name>
no region
```

Parameter	Description
<region-name>	Specify the name of the region, up to 32 characters. Valid characters are upper-case, lower-case, digits, underscore.

Default By default, the region name is My Name.

Mode MST Configuration

Usage The region name, the revision number, and the digest of the VLAN to MSTI configuration table must be the same on all devices that are intended to be in the same MST region.

Example

```
awplus# configure terminal
awplus(config)# spanning-tree mst configuration
awplus(config-mst)# region ATL
```

Related Commands revision (MSTP)

show spanning-tree mst config

revision (MSTP)

Overview Use this command to specify the MST revision number to be used in the configuration identifier.

Use this command for MSTP only.

Syntax

```
revision <revision-number>
```

Parameter	Description
<revision-number>	<0-65535> Revision number.

Default The default of revision number is 0.

Mode MST Configuration

Usage The region name, the revision number, and the digest of the VLAN to MSTI configuration table must be the same on all devices that are intended to be in the same MST region.

Example

```
awplus# configure terminal
awplus(config)# spanning-tree mst configuration
awplus(config-mst)# revision 25
```

Related Commands

region (MSTP)

show spanning-tree mst config

instance vlan (MSTP)

show debugging mstp

Overview Use this command to show the MSTP debugging options set.

For information on filtering and saving command output, see the "Getting Started with AlliedWare Plus" Feature Overview and Configuration Guide.

Syntax

```
show debugging mstp
```

Mode User Exec and Privileged Exec mode

Example To display the MSTP debugging options set, enter the command:

```
awplus# show debugging mstp
```

Output Figure 16-1: Example output from **show debugging mstp**

```
MSTP debugging status:
  MSTP receiving packet debugging is on
```

Related Commands debug mstp (RSTP and STP)

show spanning-tree

Overview Use this command to display detailed spanning tree information on the specified port or on all ports. Use this command for RSTP, MSTP or STP.

For information on filtering and saving command output, see the "Getting Started with AlliedWare Plus" Feature Overview and Configuration Guide.

Syntax

```
show spanning-tree [interface <port-list>]
```

Parameter	Description
`interface`	Display information about the following port only.
<port-list>	The ports to display information about. A port-list can be: • a switch port (e.g. port1.0.6) a static channel group (e.g. sa2) or a dynamic (LACP) channel group (e.g. po2) • a continuous range of ports separated by a hyphen, e.g. port1.0.1-1.0.4, or sa1-2, or po1-2 • a comma-separated list of ports and port ranges, e.g. port1.0.1,port1.0.4-1.0.6. Do not mix switch ports, static channel groups, and dynamic (LACP) channel groups in the same list

Mode User Exec and Privileged Exec

Usage Note that any list of interfaces specified must not span any interfaces that are not installed.

A topology change counter has been included for RSTP and MSTP. You can see the topology change counter for RSTP by using the **show spanning-tree** command. You can see the topology change counter for MSTP by using the **show spanning-tree mst instance** command.

Example To display spanning tree information about port1.0.3, use the command:

```
awplus# show spanning-tree interface port1.0.3
```

Output Figure 16-2: Example output from **show spanning-tree** in RSTP mode

```
awplus#show spanning-tree
% 1: Bridge up - Spanning Tree Enabled
% 1: Root Path Cost 0 - Root Port 0 -  Bridge Priority 32768
% 1: Forward Delay 15 - Hello Time 2 - Max Age 20
% 1: Root Id 80000000cd24ff2d
% 1: Bridge Id 80000000cd24ff2d
% 1: last topology change Mon Oct 3 02:06:26 2016
% 1: portfast bpdu-filter disabled
% 1: portfast bpdu-guard disabled
% 1: portfast errdisable timeout disabled
% 1: portfast errdisable timeout interval 300 sec
%   port1.0.1: Port 5001 - Id 8389 - Role Disabled - State Discarding
%   port1.0.1: Designated Path Cost 0
%   port1.0.1: Configured Path Cost 20000000  - Add type Explicit ref count 1
%   port1.0.1: Designated Port Id 8389 - Priority 128  -
%   port1.0.1: Root 80000000cd24ff2d
%   port1.0.1: Designated Bridge 80000000cd24ff2d
%   port1.0.1: Message Age 0 - Max Age 20
%   port1.0.1: Hello Time 2 - Forward Delay 15
%   port1.0.1: Forward Timer 0 - Msg Age Timer 0 - Hello Timer 0 - topo change
timer 0
%   port1.0.1: forward-transitions 0
%   port1.0.1: Version Rapid Spanning Tree Protocol - Received None - Send STP
%   port1.0.1: No portfast configured - Current  portfast off
%   port1.0.1: portfast bpdu-guard  default  - Current portfast bpdu-guard off
%   port1.0.1: portfast bpdu-filter default  - Current portfast bpdu-filter off
%   port1.0.1: no root guard configured     - Current root guard off
%   port1.0.1: Configured Link Type point-to-point - Current  shared
%
%   port1.0.2: Port 5002 - Id 838a - Role Disabled - State Discarding
%   port1.0.2: Designated Path Cost 0
%   port1.0.2: Configured Path Cost 20000000  - Add type Explicit ref count 1
%   port1.0.2: Designated Port Id 838a - Priority 128  -
%   port1.0.2: Root 80000000cd24ff2d
%   port1.0.2: Designated Bridge 80000000cd24ff2d
%   port1.0.2: Message Age 0 - Max Age 20
%   port1.0.2: Hello Time 2 - Forward Delay 15
%   port1.0.2: Forward Timer 0 - Msg Age Timer 0 - Hello Timer 0 - topo change
timer 0
%   port1.0.2: forward-transitions 0
%   port1.0.2: Version Rapid Spanning Tree Protocol - Received None - Send STP
%   port1.0.2: No portfast configured - Current  portfast off
%   port1.0.2: portfast bpdu-guard  default  - Current portfast bpdu-guard off
%   port1.0.2: portfast bpdu-filter default  - Current portfast bpdu-filter off
%   port1.0.2: no root guard configured     - Current root guard off
%   port1.0.2: Configured Link Type point-to-point - Current  shared
```

Output Figure 16-3: Example output from **show spanning-tree**

```
% 1: Bridge up - Spanning Tree Enabled
% 1: Root Path Cost 0 - Root Port 0 -  Bridge Priority 32768
% 1: Forward Delay 15 - Hello Time 2 - Max Age 20
% 1: Root Id 80000000cd20f093
% 1: Bridge Id 80000000cd20f093
% 1: last topology change Mon Oct 3 02:06:26 2016
% 1: portfast bpdu-filter disabled
% 1: portfast bpdu-guard disabled
% 1: portfast errdisable timeout disabled
% 1: portfast errdisable timeout interval 300 sec
%   port1.0.3: Port 5023 - Id 839f - Role Designated - State Forwarding
%   port1.0.3: Designated Path Cost 0
%   port1.0.3: Configured Path Cost 200000  - Add type Explicit ref count 1
%   port1.0.3: Designated Port Id 839f - Priority 128  -
%   port1.0.3: Root 80000000cd20f093
%   port1.0.3: Designated Bridge 80000000cd20f093
%   port1.0.3: Message Age 0 - Max Age 20
%   port1.0.3: Hello Time 2 - Forward Delay 15
%   port1.0.3: Forward Timer 0 - Msg Age Timer 0 - Hello Timer 1 - topo change
timer 0
%   port1.0.3: forward-transitions 32
%   port1.0.3: Version Rapid Spanning Tree Protocol - Received None - Send RSTP
%   port1.0.3: No portfast configured - Current  portfast off
%   port1.0.3: portfast bpdu-guard  default  - Current portfast bpdu-guard off
%   port1.0.3: portfast bpdu-filter default  - Current portfast bpdu-filter off
%   port1.0.3: no root guard configured     - Current root guard off
%   port1.0.3: Configured Link Type point-to-point - Current point-to-point
...
```

show spanning-tree brief

Overview Use this command to display a summary of spanning tree status information on all ports. Use this command for RSTP, MSTP or STP.

Syntax

```
show spanning-tree brief
```

Parameter	Description
`brief`	A brief summary of spanning tree information.

Mode User Exec and Privileged Exec

Usage Note that any list of interfaces specified must not span any interfaces that are not installed.

A topology change counter has been included for RSTP and MSTP. You can see the topology change counter for RSTP by using the **show spanning-tree** command. You can see the topology change counter for MSTP by using the **show spanning-tree mst instance** command.

Example To display a summary of spanning tree status information, use the command:

```
awplus# show spanning-tree brief
```

Output Figure 16-4: Example output from **show spanning-tree brief**

```
Default: Bridge up - Spanning Tree Enabled
Default: Root Path Cost 40000 - Root Port 4501 -  Bridge Priority 32768
Default: Root Id 8000:0000cd250001
Default: Bridge Id 8000:0000cd296eb1

Port            Designated Bridge    Port Id    Role          State
sa1             8000:001577c9744b    8195       Rootport      Forwarding
po1             8000:0000cd296eb1    81f9       Designated    Forwarding
port1.0.1       8000:0000cd296eb1    8389       Disabled      Discarding
port1.0.2       8000:0000cd296eb1    838a       Disabled      Discarding
port1.0.3       8000:0000cd296eb1    838b       Disabled      Discarding
...
```

Related Commands show spanning-tree

show spanning-tree mst

Overview This command displays bridge-level information about the CIST and VLAN to MSTI mappings.

For information on filtering and saving command output, see the "Getting Started with AlliedWare Plus" Feature Overview and Configuration Guide.

Syntax

```
show spanning-tree mst
```

Mode User Exec, Privileged Exec and Interface Configuration

Example To display bridge-level information about the CIST and VLAN to MSTI mappings, enter the command:

```
awplus# show spanning-tree mst
```

Output Figure 16-5: Example output from **show spanning-tree mst**

```
% 1: Bridge up - Spanning Tree Enabled
% 1: CIST Root Path Cost 0 - CIST Root Port 0 - CIST Bridge
Priority 32768
% 1: Forward Delay 15 - Hello Time 2 - Max Age 20 - Max-hops 20
% 1: CIST Root Id 8000000475e93ffe
% 1: CIST Reg Root Id 8000000475e93ffe
% 1: CST Bridge Id 8000000475e93ffe
% 1: portfast bpdu-filter disabled
% 1: portfast bpdu-guard disabled
% 1: portfast errdisable timeout disabled
% 1: portfast errdisable timeout interval 300 sec
%
%   Instance        VLAN
%   0:              1
%   2:              4
```

Related Commands show spanning-tree mst interface

show spanning-tree mst config

Overview Use this command to display MSTP configuration identifier for the device.

Syntax

```
show spanning-tree mst config
```

Mode User Exec, Privileged Exec and Interface Configuration

Usage The region name, the revision number, and the digest of the VLAN to MSTI configuration table must be the same on all devices that are intended to be in the same MST region.

Example To display MSTP configuration identifier information, enter the command:

```
awplus# show spanning-tree mst config
```

Output Figure 16-6: Example output from **show spanning-tree mst config**

```
awplus#show spanning-tree mst config
%
%  MSTP Configuration Information:
%--------------------------------------------------------
%  Format Id      : 0
%  Name           : My Name
%  Revision Level : 0
%  Digest         : 0x80DEE46DA92A98CF21C603291B22880A
%--------------------------------------------------------
```

Related Commands

instance vlan (MSTP)

region (MSTP)

revision (MSTP)

show spanning-tree mst detail

Overview This command displays detailed information about each instance, and all interfaces associated with that particular instance.

For information on filtering and saving command output, see the "Getting Started with AlliedWare Plus" Feature Overview and Configuration Guide.

Syntax
```
show spanning-tree mst detail
```

Mode User Exec, Privileged Exec and Interface Configuration

Example To display detailed information about each instance, and all interfaces associated with them, enter the command:

```
awplus# show spanning-tree mst detail
```

Output Figure 16-7: Example output from **show spanning-tree mst detail**

```
% 1: Bridge up - Spanning Tree Enabled
% 1: CIST Root Path Cost 0 - CIST Root Port 0 -  CIST Bridge Priority 32768
% 1: Forward Delay 15 - Hello Time 2 - Max Age 20 - Max-hops 20
% 1: CIST Root Id 80000000cd24ff2d
% 1: CIST Reg Root Id 80000000cd24ff2d
% 1: CIST Bridge Id 80000000cd24ff2d
% 1: portfast bpdu-filter disabled
% 1: portfast bpdu-guard disabled
% 1: portfast errdisable timeout disabled
% 1: portfast errdisable timeout interval 300 sec
%   port1.0.1: Port 5001 - Id 8389 - Role Disabled - State Discarding
%   port1.0.1: Designated External Path Cost 0 -Internal Path Cost 0
%   port1.0.1: Configured Path Cost 20000000  - Add type Explicit ref count 1
%   port1.0.1: Designated Port Id 8389 - CIST Priority 128  -
%   port1.0.1: CIST Root 80000000cd24ff2d
%   port1.0.1: Regional Root 80000000cd24ff2d
%   port1.0.1: Designated Bridge 80000000cd24ff2d
%   port1.0.1: Message Age 0 - Max Age 20
%   port1.0.1: CIST Hello Time 2 - Forward Delay 15
%   port1.0.1: CIST Forward Timer 0 - Msg Age Timer 0 - Hello Timer 0 - topo
change timer 0
...
%   port1.0.2: forward-transitions 0
%   port1.0.2: Version Multiple Spanning Tree Protocol - Received None - Send STP
%   port1.0.2: No portfast configured - Current  portfast off
%   port1.0.2: portfast bpdu-guard  default  - Current portfast bpdu-guard off
%   port1.0.2: portfast bpdu-filter default  - Current portfast bpdu-filter off
%   port1.0.2: no root guard configured     - Current root guard off
%   port1.0.2: Configured Link Type point-to-point - Current  shared
%
```

```
%   port1.0.3: Port 5003 - Id 838b - Role Disabled - State Discarding
%   port1.0.3: Designated External Path Cost 0 -Internal Path Cost 0
%   port1.0.3: Configured Path Cost 20000000  - Add type Explicit ref count 1
%   port1.0.3: Designated Port Id 838b - CIST Priority 128  -
%   port1.0.3: CIST Root 80000000cd24ff2d
%   port1.0.3: Regional Root 80000000cd24ff2d
%   port1.0.3: Designated Bridge 80000000cd24ff2d
%   port1.0.3: Message Age 0 - Max Age 20
%   port1.0.3: CIST Hello Time 2 - Forward Delay 15
%   port1.0.3: CIST Forward Timer 0 - Msg Age Timer 0 - Hello Timer 0 - topo
change timer 0
%   port1.0.3: forward-transitions 0
%   port1.0.3: Version Multiple Spanning Tree Protocol - Received None - Send STP
%   port1.0.3: No portfast configured - Current  portfast off
%   port1.0.3: portfast bpdu-guard  default  - Current portfast bpdu-guard off
%   port1.0.3: portfast bpdu-filter default  - Current portfast bpdu-filter off
%   port1.0.3: no root guard configured     - Current root guard off
%   port1.0.3: Configured Link Type point-to-point - Current  shared
```

show spanning-tree mst detail interface

Overview This command displays detailed information about the specified switch port, and the MST instances associated with it.

For information on filtering and saving command output, see the "Getting Started with AlliedWare Plus" Feature Overview and Configuration Guide.

Syntax

```
show spanning-tree mst detail interface <port>
```

Parameter	Description
<port>	The port to display information about. The port may be a switch port (e.g. `port1.0.4`), a static channel group (e.g. `sa2`), or a dynamic (LACP) channel group (e.g. `po2`).

Mode User Exec, Privileged Exec and Interface Configuration

Example To display detailed information about `port1.0.3` and the instances associated with it, enter the command:

```
awplus# show spanning-tree mst detail interface port1.0.3
```

Output Figure 16-8: Example output from **show spanning-tree mst detail interface**

```
% 1: Bridge up - Spanning Tree Enabled
% 1: CIST Root Path Cost 0 - CIST Root Port 0 -  CIST Bridge Priority 32768
% 1: Forward Delay 15 - Hello Time 2 - Max Age 20 - Max-hops 20
% 1: CIST Root Id 80000000cd24ff2d
% 1: CIST Reg Root Id 80000000cd24ff2d
% 1: CIST Bridge Id 80000000cd24ff2d
% 1: portfast bpdu-filter disabled
% 1: portfast bpdu-guard disabled
% 1: portfast errdisable timeout disabled
% 1: portfast errdisable timeout interval 300 sec
%   port1.0.2: Port 5002 - Id 838a - Role Disabled - State Discarding
%   port1.0.2: Designated External Path Cost 0 -Internal Path Cost 0
%   port1.0.2: Configured Path Cost 20000000  - Add type Explicit ref count 2
%   port1.0.2: Designated Port Id 838a - CIST Priority 128  -
%   port1.0.2: CIST Root 80000000cd24ff2d
%   port1.0.2: Regional Root 80000000cd24ff2d
%   port1.0.2: Designated Bridge 80000000cd24ff2d
%   port1.0.2: Message Age 0 - Max Age 20
%   port1.0.2: CIST Hello Time 2 - Forward Delay 15
%   port1.0.2: CIST Forward Timer 0 - Msg Age Timer 0 - Hello Timer 0 - topo
change timer 0
%   port1.0.2: forward-transitions 0
%   port1.0.2: Version Multiple Spanning Tree Protocol - Received None - Send STP
```

```
%   port1.0.2: No portfast configured - Current  portfast off
%   port1.0.2: portfast bpdu-guard  default  - Current portfast bpdu-guard off
%   port1.0.2: portfast bpdu-filter default  - Current portfast bpdu-filter off
%   port1.0.2: no root guard configured     - Current root guard off
%   port1.0.2: Configured Link Type point-to-point - Current  shared
%
% Instance  2:  Vlans: 2
% 1: MSTI Root Path Cost 0 -MSTI Root Port 0 - MSTI Bridge Priority 32768
% 1: MSTI Root Id 80020000cd24ff2d
% 1: MSTI Bridge Id 80020000cd24ff2d
%   port1.0.2: Port 5002 - Id 838a - Role Disabled - State Discarding
%   port1.0.2: Designated Internal Path Cost 0  - Designated Port Id 838a
%   port1.0.2: Configured Internal Path Cost 20000000
%   port1.0.2: Configured CST External Path cost 20000000
%   port1.0.2: CST Priority 128  - MSTI Priority 128
%   port1.0.2: Designated Root 80020000cd24ff2d
%   port1.0.2: Designated Bridge 80020000cd24ff2d
%   port1.0.2: Message Age 0 - Max Age 0
%   port1.0.2: Hello Time 2 - Forward Delay 15
%   port1.0.2: Forward Timer 0 - Msg Age Timer 0 - Hello Timer 0
```

show spanning-tree mst instance

Overview This command displays detailed information for the specified instance, and all switch ports associated with that instance.

A topology change counter has been included for RSTP and MSTP. You can see the topology change counter for RSTP by using the show spanning-tree command. You can see the topology change counter for MSTP by using the **show spanning-tree mst instance** command.

For information on filtering and saving command output, see the "Getting Started with AlliedWare Plus" Feature Overview and Configuration Guide.

Syntax

```
show spanning-tree mst instance <instance-id>
```

Parameter	Description
<instance-id>	Specify an MSTP instance in the range 1-5.

Mode User Exec, Privileged Exec, and Interface Configuration

Example To display detailed information for **instance 2**, and all switch ports associated with that instance, use the command:

```
awplus# show spanning-tree mst instance 2
```

Output Figure 16-9: Example output from **show spanning-tree mst instance**

```
% 1: MSTI Root Path Cost 0 - MSTI Root Port 0 - MSTI Bridge Priority 32768
% 1: MSTI Root Id 80020000cd24ff2d
% 1: MSTI Bridge Id 80020000cd24ff2d
%   port1.0.2: Port 5002 - Id 838a - Role Disabled - State Discarding
%   port1.0.2: Designated Internal Path Cost 0  - Designated Port Id 838a
%   port1.0.2: Configured Internal Path Cost 20000000
%   port1.0.2: Configured CST External Path cost 20000000
%   port1.0.2: CST Priority 128  - MSTI Priority 128
%   port1.0.2: Designated Root 80020000cd24ff2d
%   port1.0.2: Designated Bridge 80020000cd24ff2d
%   port1.0.2: Message Age 0 - Max Age 0
%   port1.0.2: Hello Time 2 - Forward Delay 15
%   port1.0.2: Forward Timer 0 - Msg Age Timer 0 - Hello Timer 0
%
```

show spanning-tree mst instance interface

Overview This command displays detailed information for the specified MST (Multiple Spanning Tree) instance, and the specified switch port associated with that MST instance.

For information on filtering and saving command output, see the "Getting Started with AlliedWare Plus" Feature Overview and Configuration Guide.

Syntax

```
show spanning-tree mst instance <instance-id> interface <port>
```

Parameter	Description
<instance-id>	Specify an MSTP instance in the range 1-5.
<port>	The port to display information about. The port may be a switch port (e.g. port1.0.4), a static channel group (e.g. sa2), or a dynamic (LACP) channel group (e.g. po2).

Mode User Exec, Privileged Exec, and Interface Configuration

Example To display detailed information for instance 2, interface port1.0.2, use the command:

```
awplus# show spanning-tree mst instance 2 interface port1.0.2
```

Output Figure 16-10: Example output from **show spanning-tree mst instance**

```
% 1: MSTI Root Path Cost 0 - MSTI Root Port 0 - MSTI Bridge Priority 32768
% 1: MSTI Root Id 80020000cd24ff2d
% 1: MSTI Bridge Id 80020000cd24ff2d
%   port1.0.2: Port 5002 - Id 838a - Role Disabled - State Discarding
%   port1.0.2: Designated Internal Path Cost 0  - Designated Port Id 838a
%   port1.0.2: Configured Internal Path Cost 20000000
%   port1.0.2: Configured CST External Path cost 20000000
%   port1.0.2: CST Priority 128  - MSTI Priority 128
%   port1.0.2: Designated Root 80020000cd24ff2d
%   port1.0.2: Designated Bridge 80020000cd24ff2d
%   port1.0.2: Message Age 0 - Max Age 0
%   port1.0.2: Hello Time 2 - Forward Delay 15
%   port1.0.2: Forward Timer 0 - Msg Age Timer 0 - Hello Timer 0
%
```

show spanning-tree mst interface

Overview This command displays the number of instances created, and VLANs associated with it for the specified switch port.

For information on filtering and saving command output, see the "Getting Started with AlliedWare Plus" Feature Overview and Configuration Guide.

Syntax

```
show spanning-tree mst interface <port>
```

Parameter	Description
<port>	The port to display information about. The port may be a switch port (e.g. `port1.0.4`), a static channel group (e.g. `sa2`), or a dynamic (LACP) channel group (e.g. `po2`).

Mode User Exec, Privileged Exec, and Interface Configuration

Example To display detailed information about each instance, and all interfaces associated with them, for `port1.0.4`, use the command:

```
awplus# show spanning-tree mst interface port1.0.4
```

Output Figure 16-11: Example output from **show spanning-tree mst interface**

```
% 1: Bridge up - Spanning Tree Enabled
% 1: CIST Root Path Cost 0 - CIST Root Port 0 - CIST Bridge Priority 32768
% 1: Forward Delay 15 - Hello Time 2 - Max Age 20 - Max-hops 20
% 1: CIST Root Id 80000008c73a2b22
% 1: CIST Reg Root Id 80000008c73a2b22
% 1: CST Bridge Id 80000008c73a2b22
% 1: portfast bpdu-filter disabled
% 1: portfast bpdu-guard disabled
% 1: portfast errdisable timeout disabled
% 1: portfast errdisable timeout interval 1 sec
%
%   Instance        VLAN
%   0:              1
%   1:              2-3
%   2:              4-5
```

show spanning-tree mst detail interface

Overview This command displays detailed information about the specified switch port, and the MST instances associated with it.

For information on filtering and saving command output, see the "Getting Started with AlliedWare Plus" Feature Overview and Configuration Guide.

Syntax

```
show spanning-tree mst detail interface <port>
```

Parameter	Description
<port>	The port to display information about. The port may be a switch port (e.g. `port1.0.4`), a static channel group (e.g. `sa2`), or a dynamic (LACP) channel group (e.g. `po2`).

Mode User Exec, Privileged Exec and Interface Configuration

Example To display detailed information about `port1.0.3` and the instances associated with it, enter the command:

```
awplus# show spanning-tree mst detail interface port1.0.3
```

Output Figure 16-12: Example output from **show spanning-tree mst detail interface**

```
% 1: Bridge up - Spanning Tree Enabled
% 1: CIST Root Path Cost 0 - CIST Root Port 0 -  CIST Bridge Priority 32768
% 1: Forward Delay 15 - Hello Time 2 - Max Age 20 - Max-hops 20
% 1: CIST Root Id 80000000cd24ff2d
% 1: CIST Reg Root Id 80000000cd24ff2d
% 1: CIST Bridge Id 80000000cd24ff2d
% 1: portfast bpdu-filter disabled
% 1: portfast bpdu-guard disabled
% 1: portfast errdisable timeout disabled
% 1: portfast errdisable timeout interval 300 sec
%   port1.0.2: Port 5002 - Id 838a - Role Disabled - State Discarding
%   port1.0.2: Designated External Path Cost 0 -Internal Path Cost 0
%   port1.0.2: Configured Path Cost 20000000  - Add type Explicit ref count 2
%   port1.0.2: Designated Port Id 838a - CIST Priority 128  -
%   port1.0.2: CIST Root 80000000cd24ff2d
%   port1.0.2: Regional Root 80000000cd24ff2d
%   port1.0.2: Designated Bridge 80000000cd24ff2d
%   port1.0.2: Message Age 0 - Max Age 20
%   port1.0.2: CIST Hello Time 2 - Forward Delay 15
%   port1.0.2: CIST Forward Timer 0 - Msg Age Timer 0 - Hello Timer 0 - topo
change timer 0
%   port1.0.2: forward-transitions 0
%   port1.0.2: Version Multiple Spanning Tree Protocol - Received None - Send STP
```

```
%   port1.0.2: No portfast configured - Current  portfast off
%   port1.0.2: portfast bpdu-guard  default  - Current portfast bpdu-guard off
%   port1.0.2: portfast bpdu-filter default  - Current portfast bpdu-filter off
%   port1.0.2: no root guard configured     - Current root guard off
%   port1.0.2: Configured Link Type point-to-point - Current  shared
%
% Instance  2:  Vlans: 2
% 1: MSTI Root Path Cost 0 -MSTI Root Port 0 - MSTI Bridge Priority 32768
% 1: MSTI Root Id 80020000cd24ff2d
% 1: MSTI Bridge Id 80020000cd24ff2d
%   port1.0.2: Port 5002 - Id 838a - Role Disabled - State Discarding
%   port1.0.2: Designated Internal Path Cost 0  - Designated Port Id 838a
%   port1.0.2: Configured Internal Path Cost 20000000
%   port1.0.2: Configured CST External Path cost 20000000
%   port1.0.2: CST Priority 128  - MSTI Priority 128
%   port1.0.2: Designated Root 80020000cd24ff2d
%   port1.0.2: Designated Bridge 80020000cd24ff2d
%   port1.0.2: Message Age 0 - Max Age 0
%   port1.0.2: Hello Time 2 - Forward Delay 15
%   port1.0.2: Forward Timer 0 - Msg Age Timer 0 - Hello Timer 0
```

show spanning-tree statistics

Overview This command displays BPDU (Bridge Protocol Data Unit) statistics for all spanning-tree instances, and all switch ports associated with all spanning-tree instances.

For information on filtering and saving command output, see the "Getting Started with AlliedWare Plus" Feature Overview and Configuration Guide.

Syntax

```
show spanning-tree statistics
```

Mode Privileged Exec

Usage To display BPDU statistics for all spanning-tree instances, and all switch ports associated with all spanning-tree instances, use the command:

```
awplus# show spanning-tree statistics
```

Output Figure 16-13: Example output from **show spanning-tree statistics**

```
                ================================
% BPDU Related Parameters
% ------------------------
% Port Spanning Tree                 : Disable
% Spanning Tree Type                 : Rapid Spanning Tree Protocol
% Current Port State                 : Discarding
% Port ID                            : 8393
% Port Number                        : 393
% Path Cost                          : 20000000
% Message Age                        : 0
% Designated Root                    : ec:cd:6d:20:c0:ed
% Designated Cost                    : 0
% Designated Bridge                  : ec:cd:6d:20:c0:ed
% Designated Port Id                 : 8393
% Top Change Ack                     : FALSE
% Config Pending                     : FALSE
% PORT Based Information & Statistics
% ----------------------------------
% Config Bpdu's xmitted              : 0
% Config Bpdu's received             : 0
% TCN Bpdu's xmitted                 : 0
% TCN Bpdu's received                : 0
% Forward Trans Count                : 0
```

```
% STATUS of Port Timers
% ----------------------
% Hello Time Configured              : 2
% Hello timer                        : INACTIVE
% Hello Time Value                   : 0
% Forward Delay Timer                : INACTIVE
% Forward Delay Timer Value          : 0
% Message Age Timer                  : INACTIVE
% Message Age Timer Value            : 0
% Topology Change Timer              : INACTIVE
% Topology Change Timer Value        : 0
% Hold Timer                         : INACTIVE
% Hold Timer Value                   : 0
% Other Port-Specific Info
  ------------------------
% Max Age Transitions                : 1
% Msg Age Expiry                     : 0
% Similar BPDUS Rcvd                 : 0
% Src Mac Count                      : 0
% Total Src Mac Rcvd                 : 0
% Next State                         : Learning
% Topology Change Time               : 0
```

show spanning-tree statistics instance

Overview This command displays BPDU (Bridge Protocol Data Unit) statistics for the specified MST (Multiple Spanning Tree) instance, and all switch ports associated with that MST instance.

For information on filtering and saving command output, see the "Getting Started with AlliedWare Plus" Feature Overview and Configuration Guide.

Syntax

```
show spanning-tree statistics instance <instance-id>
```

Parameter	Description
<instance-id>	Specify an MSTP instance in the range 1-5.

Mode Privileged Exec

Example To display BPDU statistics information for MST instance 2, and all switch ports associated with that MST instance, use the command:

```
awplus# show spanning-tree statistics instance 2
```

Output Figure 16-14: Example output from **show spanning-tree statistics instance**

```
% % INST_PORT port1.0.3 Information & Statistics
% ----------------------------------------
% Config Bpdu's xmitted (port/inst)     : (0/0)
% Config Bpdu's received (port/inst)    : (0/0)
% TCN Bpdu's xmitted (port/inst)        : (0/0)
% TCN Bpdu's received (port/inst)       : (0/0)
% Message Age(port/Inst)                : (0/0)
% port1.0.3: Forward Transitions                  : 0
% Next State                            : Learning
% Topology Change Time                  : 0
...
```

Related Commands show spanning-tree statistics

show spanning-tree statistics instance interface

Overview This command displays BPDU (Bridge Protocol Data Unit) statistics for the specified MST (Multiple Spanning Tree) instance and the specified switch port associated with that MST instance.

For information on filtering and saving command output, see the "Getting Started with AlliedWare Plus" Feature Overview and Configuration Guide.

Syntax

```
show spanning-tree statistics instance <instance-id> interface
<port>
```

Parameter	Description
<instance-id>	Specify an MSTP instance in the range 1-5.
<port>	The port to display information about. The port may be a switch port (e.g. port1.0.4), a static channel group (e.g. sa2), or a dynamic (LACP) channel group (e.g. po2).

Mode Privileged Exec

Example To display BPDU statistics for MST instance 2, interface port1.0.2, use the command:

```
awplus# show spanning-tree statistics instance 2 interface
port1.0.2
```

Output Figure 16-15: Example output from **show spanning-tree statistics instance interface**

```
awplus#sh spanning-tree statistics interface port1.0.2 instance 1
        Spanning Tree Enabled for Instance : 1
        ==================================
% INST_PORT port1.0.2 Information & Statistics
% ---------------------------------------
% Config Bpdu's xmitted (port/inst)    : (0/0)
% Config Bpdu's received (port/inst)   : (0/0)
% TCN Bpdu's xmitted (port/inst)       : (0/0)
% TCN Bpdu's received (port/inst)      : (0/0)
% Message Age(port/Inst)               : (0/0)
% port1.0.2: Forward Transitions       : 0
% Next State                           : Learning
% Topology Change Time                 : 0

% Other Inst/Vlan Information & Statistics
% ---------------------------------------
% Bridge Priority                     : 0
% Bridge Mac Address                  : ec:cd:6d:20:c0:ed
% Topology Change Initiator           : 5023
% Last Topology Change Occured        : Mon Oct 3 05:42:06 2016
% Topology Change                     : FALSE
% Topology Change Detected            : FALSE
% Topology Change Count               : 1
% Topology Change Last Recvd from     : 00:00:00:00:00:00
```

Related Commands show spanning-tree statistics

show spanning-tree statistics interface

Overview This command displays BPDU (Bridge Protocol Data Unit) statistics for the specified switch port, and all MST instances associated with that switch port.

For information on filtering and saving command output, see the "Getting Started with AlliedWare Plus" Feature Overview and Configuration Guide.

Syntax

```
show spanning-tree statistics interface <port>
```

Parameter	Description
<port>	The port to display information about. The port may be a switch port (e.g. port1.0.4), a static channel group (e.g. sa2), or a dynamic (LACP) channel group (e.g. po2).

Mode Privileged Exec

Example To display BPDU statistics about each MST instance for port1.0.2, use the command:

```
awplus# show spanning-tree statistics interface port1.0.2
```

Output Figure 16-16: Example output from **show spanning-tree statistics interface**

```
awplus#show spanning-tree statistics interface port1.0.2

              Port number = 906 Interface = port1.0.2
                 ================================
% BPDU Related Parameters
% ------------------------
% Port Spanning Tree                : Disable
% Spanning Tree Type                : Multiple Spanning Tree Protocol
% Current Port State                : Discarding
% Port ID                           : 838a
% Port Number                       : 38a
% Path Cost                         : 20000000
% Message Age                       : 0
% Designated Root                   : ec:cd:6d:20:c0:ed
% Designated Cost                   : 0
% Designated Bridge                 : ec:cd:6d:20:c0:ed
% Designated Port Id                : 838a
% Top Change Ack                    : FALSE
% Config Pending                    : FALSE
```

```
% PORT Based Information & Statistics
% -----------------------------------
% Config Bpdu's xmitted              : 0
% Config Bpdu's received             : 0
% TCN Bpdu's xmitted                 : 0
% TCN Bpdu's received                : 0
% Forward Trans Count                : 0

% STATUS of Port Timers
% ---------------------
% Hello Time Configured              : 2
% Hello timer                        : INACTIVE
% Hello Time Value                   : 0
% Forward Delay Timer                : INACTIVE
% Forward Delay Timer Value          : 0
% Message Age Timer                  : INACTIVE
% Message Age Timer Value            : 0
% Topology Change Timer              : INACTIVE
% Topology Change Timer Value        : 0
% Hold Timer                         : INACTIVE
% Hold Timer Value                   : 0

% Other Port-Specific Info
  ------------------------
% Max Age Transitions                : 1
% Msg Age Expiry                     : 0
% Similar BPDUS Rcvd                 : 0
% Src Mac Count                      : 0
% Total Src Mac Rcvd                 : 0
% Next State                         : Learning
% Topology Change Time               : 0
% Other Bridge information & Statistics
  -------------------------------------
% STP Multicast Address              : 01:80:c2:00:00:00
% Bridge Priority                    : 32768
% Bridge Mac Address                 : ec:cd:6d:20:c0:ed
% Bridge Hello Time                  : 2
% Bridge Forward Delay               : 15
% Topology Change Initiator          : 5023
% Last Topology Change Occured       : Mon Oct 3 05:41:20 2016
% Topology Change                    : FALSE
% Topology Change Detected           : TRUE
% Topology Change Count              : 1
% Topology Change Last Recvd from    : 00:00:00:00:00:00
```

Related Commands show spanning-tree statistics

show spanning-tree vlan range-index

Overview Use this command to display information about MST (Multiple Spanning Tree) instances and the VLANs associated with them including the VLAN range-index value for the device.

Syntax

```
show spanning-tree vlan range-index
```

Mode Privileged Exec

Example To display information about MST instances and the VLANs associated with them for the device, including the VLAN range-index value, use the following command:

```
awplus# show spanning-tree vlan range-index
```

Output Figure 16-17: Example output from **show spanning-tree vlan range-index**

```
awplus#show spanning-tree vlan range-index
% MST Instance  VLAN       RangeIdx
%      1        1          1%
```

Related Commands show spanning-tree statistics

spanning-tree autoedge (RSTP and MSTP)

Overview Use this command to enable the autoedge feature on the port.

The autoedge feature allows the port to automatically detect that it is an edge port. If it does not receive any BPDUs in the first three seconds after linkup, enabling, or entering RSTP or MSTP mode, it sets itself to be an edgeport and enters the forwarding state.

Use this command for RSTP or MSTP.

Use the **no** variant of this command to disable this feature.

Syntax

```
spanning-tree autoedge
no spanning-tree autoedge
```

Default Disabled

Mode Interface Configuration

Example

```
awplus# configure terminal
awplus(config)# interface port1.0.3
awplus(config-if)# spanning-tree autoedge
```

Related Commands spanning-tree edgeport (RSTP and MSTP)

spanning-tree cisco-interoperability (MSTP)

Overview Use this command to enable/disable Cisco-interoperability for MSTP.

Use this command for MSTP only.

Syntax

```
spanning-tree cisco-interoperability {enable|disable}
```

Parameter	Description
`enable`	Enable Cisco interoperability for MSTP.
`disable`	Disable Cisco interoperability for MSTP.

Default If this command is not used, Cisco interoperability is disabled.

Mode Global Configuration

Usage For compatibility with certain Cisco devices, all devices in the switched LAN running the AlliedWare Plus™ Operating System must have Cisco-interoperability enabled. When the AlliedWare Plus Operating System is interoperating with Cisco, the only criteria used to classify a region are the region name and revision level. VLAN to instance mapping is not used to classify regions when interoperating with Cisco.

Examples To enable Cisco interoperability on a Layer 2 device:

```
awplus# configure terminal
awplus(config)# spanning-tree cisco-interoperability enable
```

To disable Cisco interoperability on a Layer 2 device:

```
awplus# configure terminal
awplus(config)# spanning-tree cisco-interoperability disable
```

spanning-tree edgeport (RSTP and MSTP)

Overview Use this command to set a port as an edge-port.

Use this command for RSTP or MSTP.

This command has the same effect as the spanning-tree portfast (STP) command, but the configuration displays differently in the output of some show commands.

Use the **no** variant of this command to set a port to its default state (not an edge-port).

Syntax
```
spanning-tree edgeport
no spanning-tree edgeport
```

Default Not an edge port.

Mode Interface Configuration

Usage Use this command on a switch port connected to a LAN that has no other bridges attached. If a BPDU is received on the port that indicates that another bridge is connected to the LAN, then the port is no longer treated as an edge port.

Example
```
awplus# configure terminal
awplus(config)# interface port1.0.2
awplus(config-if)# spanning-tree edgeport
```

Related Commands spanning-tree autoedge (RSTP and MSTP)

spanning-tree enable

Overview Use this command in Global Configuration mode to enable the specified spanning tree protocol for all switch ports. Note that this must be the spanning tree protocol that is configured on the device by the spanning-tree mode command.

Use the **no** variant of this command to disable the configured spanning tree protocol. This places all switch ports in the forwarding state.

Syntax

```
spanning-tree {mstp|rstp|stp} enable
no spanning-tree {mstp|rstp|stp} enable
```

Parameter	Description
`mstp`	Enables or disables MSTP (Multiple Spanning Tree Protocol).
`rstp`	Enables or disables RSTP (Rapid Spanning Tree Protocol).
`stp`	Enables or disables STP (Spanning Tree Protocol).

Default RSTP is enabled by default for all switch ports.

Mode Global Configuration

Usage With no configuration, spanning tree is enabled, and the spanning tree mode is set to RSTP. To change the mode, see spanning-tree mode command.

Examples To enable STP in Global Configuration mode, enter the below commands:

```
awplus# configure terminal
awplus(config)# spanning-tree stp enable
```

To disable STP in Global Configuration mode, enter the below commands:

```
awplus# configure terminal
awplus(config)# no spanning-tree stp enable
```

To enable MSTP in Global Configuration mode, enter the below commands:

```
awplus# configure terminal
awplus(config)# spanning-tree mstp enable
```

To disable MSTP in Global Configuration mode, enter the below commands:

```
awplus# configure terminal
awplus(config)# no spanning-tree mstp enable
```

To enable RSTP in Global Configuration mode, enter the below commands:

```
awplus# configure terminal
awplus(config)# spanning-tree rstp enable
```

To disable RSTP in Global Configuration mode, enter the below commands:

```
awplus# configure terminal
awplus(config)# no spanning-tree rstp enable
```

Related Commands spanning-tree mode

spanning-tree errdisable-timeout enable

Overview Use this command to enable the errdisable-timeout facility, which sets a timeout for ports that are disabled due to the BPDU guard feature.

Use this command for RSTP or MSTP.

Use the **no** variant of this command to disable the errdisable-timeout facility.

Syntax
```
spanning-tree errdisable-timeout enable
no spanning-tree errdisable-timeout enable
```

Default By default, the errdisable-timeout is disabled.

Mode Global Configuration

Usage The BPDU guard feature shuts down the port on receiving a BPDU on a BPDU-guard enabled port. This command associates a timer with the feature such that the port is re- enabled without manual intervention after a set interval. This interval can be configured by the user using the spanning-tree errdisable-timeout interval command.

Example
```
awplus# configure terminal
awplus(config)# spanning-tree errdisable-timeout enable
```

Related Commands
show spanning-tree

spanning-tree errdisable-timeout interval

spanning-tree portfast bpdu-guard

spanning-tree errdisable-timeout interval

Overview Use this command to specify the time interval after which a port is brought back up when it has been disabled by the BPDU guard feature.

Use this command for RSTP or MSTP.

Syntax

```
spanning-tree errdisable-timeout interval <10-1000000>
no spanning-tree errdisable-timeout interval
```

Parameter	Description
<10-1000000>	Specify the errdisable-timeout interval in seconds.

Default By default, the port is re-enabled after 300 seconds.

Mode Global Configuration

Example

```
awplus# configure terminal
awplus(config)# spanning-tree errdisable-timeout interval 34
```

Related Commands

show spanning-tree

spanning-tree errdisable-timeout enable

spanning-tree portfast bpdu-guard

spanning-tree force-version

Overview Use this command in Interface Configuration mode for a switch port interface only to force the protocol version for the switch port. Use this command for RSTP or MSTP only.

Syntax

```
spanning-tree force-version <version>
no spanning-tree force-version
```

Parameter	Description	
<version>	<0-3> Version identifier.	
	0	Forces the port to operate in STP mode.
	1	Not supported.
	2	Forces the port to operate in RSTP mode. If it receives STP BPDUs, it can automatically revert to STP mode.
	3	Forces the port to operate in MSTP mode (this option is only available if MSTP mode is configured). If it receives RSTP or STP BPDUs, it can automatically revert to RSTP or STP mode.

Default By default, no version is forced for the port. The port is in the spanning tree mode configured for the device, or a lower version if it automatically detects one.

Mode Interface Configuration mode for a switch port interface only.

Examples Set the value to enforce the spanning tree protocol (STP):

```
awplus# configure terminal
awplus(config)# interface port1.0.2
awplus(config-if)# spanning-tree force-version 0
```

Set the default protocol version:

```
awplus# configure terminal
awplus(config)# interface port1.0.2
awplus(config-if)# no spanning-tree force-version
```

Related Commands show spanning-tree

spanning-tree forward-time

Overview Use this command to set the forward delay value. Use the **no** variant of this command to reset the forward delay value to the default setting of 15 seconds.

The **forward delay** sets the time (in seconds) to control how fast a port changes its spanning tree state when moving towards the forwarding state. If the mode is set to STP, the value determines how long the port stays in each of the listening and learning states which precede the forwarding state. If the mode is set to RSTP or MSTP, this value determines the maximum time taken to transition from discarding to learning and from learning to forwarding.

This value is used only when the device is acting as the root bridge. Devices not acting as the Root Bridge use a dynamic value for the **forward delay** set by the root bridge. The **forward delay**, **max-age**, and **hello time** parameters are interrelated.

Syntax

```
spanning-tree forward-time <forward-delay>
no spanning-tree forward-time
```

Parameter	Description
<forward-delay>	<4-30> The forwarding time delay in seconds.

Default The default is 15 seconds.

Mode Global Configuration

Usage The allowable range for forward-time is 4-30 seconds.

The **forward delay**, **max-age**, and **hello time** parameters should be set according to the following formula, as specified in IEEE Standard 802.1d:

2 x (forward delay - 1.0 seconds) >= max-age

max-age >= 2 x (hello time + 1.0 seconds)

Example

```
awplus# configure terminal
awplus(config)# spanning-tree forward-time 6
```

Related Commands

show spanning-tree

spanning-tree forward-time

spanning-tree hello-time

spanning-tree mode

spanning-tree guard root

Overview Use this command in Interface Configuration mode for a switch port only to enable the Root Guard feature for the switch port. The root guard feature disables reception of superior BPDUs. You can use this command for RSTP, STP or MSTP.

Use the **no** variant of this command to disable the root guard feature for the port.

Syntax

```
spanning-tree guard root
no spanning-tree guard root
```

Mode Interface Configuration mode for a switch port interface only.

Usage The Root Guard feature makes sure that the port on which it is enabled is a designated port. If the Root Guard enabled port receives a superior BPDU, it goes to a Listening state (for STP) or discarding state (for RSTP and MSTP).

Example

```
awplus# configure terminal
awplus(config)# interface port1.0.2
awplus(config-if)# spanning-tree guard root
```

spanning-tree hello-time

Overview Use this command to set the hello-time. This sets the time in seconds between the transmission of device spanning tree configuration information when the device is the Root Bridge of the spanning tree or is trying to become the Root Bridge.

Use this command for RSTP, STP or MSTP.

Use the **no** variant of this command to restore the default of the hello time.

Syntax

```
spanning-tree hello-time <hello-time>
no spanning-tree hello-time
```

Parameter	Description
<hello-time>	<1-10> The hello BPDU interval in seconds.

Default Default is 2 seconds.

Mode Global Configuration and Interface Configuration for switch ports.

Usage The allowable range of values is 1-10 seconds.

The forward delay, max-age, and hello time parameters should be set according to the following formula, as specified in IEEE Standard 802.1d:

2 x (forward delay - 1.0 seconds) >= max-age

max-age>= 2 x (hello time + 1.0 seconds)

Example

```
awplus# configure terminal
awplus(config)# spanning-tree hello-time 3
```

Related Commands

spanning-tree forward-time

spanning-tree max-age

show spanning-tree

spanning-tree link-type

Overview Use this command in Interface Configuration mode for a switch port interface only to enable or disable point-to-point or shared link types on the switch port.

Use this command for RSTP or MSTP only.

Use the **no** variant of this command to return the port to the default link type.

Syntax

```
spanning-tree link-type {point-to-point|shared}
no spanning-tree link-type
```

Parameter	Description
`shared`	Disable rapid transition.
`point-to-point`	Enable rapid transition.

Default The default link type is point-to-point.

Mode Interface Configuration mode for a switch port interface only.

Usage You may want to set link type to shared if the port is connected to a hub with multiple devices connected to it.

Examples

```
awplus# configure terminal
awplus(config)# interface port1.0.2
awplus(config-if)# spanning-tree link-type point-to-point
```

spanning-tree max-age

Overview Use this command to set the max-age. This sets the maximum age, in seconds, that dynamic spanning tree configuration information is stored in the device before it is discarded.

Use this command for RSTP, STP or MSTP.

Use the **no** variant of this command to restore the default of max-age.

Syntax

```
spanning-tree max-age <max-age>
no spanning-tree max-age
```

Parameter	Description
<max-age>	<6-40> The maximum time, in seconds.

Default The default of spanning-tree max-age is 20 seconds.

Mode Global Configuration

Usage Max-age is the maximum time in seconds for which a message is considered valid.

Configure this value sufficiently high, so that a frame generated by the root bridge can be propagated to the leaf nodes without exceeding the max-age.

The **forward delay**, **max-age**, and **hello time** parameters should be set according to the following formula, as specified in IEEE Standard 802.1d:

2 x (forward delay - 1.0 seconds) >= max-age

max-age >= 2 x (hello time + 1.0 seconds)

Example

```
awplus# configure terminal
awplus(config)# spanning-tree max-age 12
```

Related Commands

show spanning-tree

spanning-tree forward-time

spanning-tree hello-time

spanning-tree max-hops (MSTP)

Overview Use this command to specify the maximum allowed hops for a BPDU in an MST region. This parameter is used by all the instances of the MST region.

Use the **no** variant of this command to restore the default.

Use this command for MSTP only.

Syntax

```
spanning-tree max-hops <hop-count>
no spanning-tree max-hops <hop-count>
```

Parameter	Description
<hop-count>	Specify the maximum hops the BPDU will be valid for in the range <1-40>.

Default The default max-hops in a MST region is 20.

Mode Global Configuration

Usage Specifying the max hops for a BPDU prevents the messages from looping indefinitely in the network. The hop count is decremented by each receiving port. When a device receives an MST BPDU that has a hop count of zero, it discards the BPDU.

Examples

```
awplus# configure terminal
awplus(config)# spanning-tree max-hops 25
awplus# configure terminal
awplus(config)# no spanning-tree max-hops
```

spanning-tree mode

Overview Use this command to change the spanning tree protocol mode on the device. The spanning tree protocol mode on the device can be configured to either STP, RSTP or MSTP.

Syntax

```
spanning-tree mode {stp|rstp|mstp}
```

Default The default spanning tree protocol mode on the device is RSTP.

Mode Global Configuration

Usage With no configuration, the device will have spanning tree enabled, and the spanning tree mode will be set to RSTP. Use this command to change the spanning tree protocol mode on the device. MSTP is VLAN aware, but RSTP and STP are not VLAN aware. To enable or disable spanning tree operation, see the spanning-tree enable command.

Examples To change the spanning tree mode from the default of RSTP to MSTP, use the following commands:

```
awplus# configure terminal
awplus(config)# spanning-tree mode mstp
```

Related Commands spanning-tree enable

spanning-tree mst configuration

Overview Use this command to enter the MST Configuration mode to configure the Multiple Spanning-Tree Protocol.

Syntax

```
spanning-tree mst configuration
```

Mode Global Configuration

Examples The following example uses this command to enter MST Configuration mode. Note the change in the command prompt.

```
awplus# configure terminal
awplus(config)# spanning-tree mst configuration
awplus(config-mst)#
```

spanning-tree mst instance

Overview Use this command to assign a Multiple Spanning Tree instance (MSTI) to a switch port or channel group.

Note that ports are automatically configured to send and receive spanning-tree information for the associated MSTI when VLANs are assigned to MSTIs using the instance vlan (MSTP) command.

Use the **no** variant of this command in Interface Configuration mode to remove the MSTI from the specified switch port or channel group.

Syntax

```
spanning-tree mst instance <instance-id>
no spanning-tree mst instance <instance-id>
```

Parameter	Description
<instance-id>	Specify an MSTP instance in the range 1-5. The MST instance must have already been created using the instance vlan (MSTP) command.

Default A port automatically becomes a member of an MSTI when it is assigned to a VLAN.

Mode Interface Configuration mode for a switch port or channel group.

Usage You can disable automatic configuration of member ports of a VLAN to an associated MSTI by using a **no spanning-tree mst instance** command to remove the member port from the MSTI. Use the **spanning-tree mst instance** command to add a VLAN member port back to the MSTI.

Examples To assign instance 3 to a switch port, use the commands:

```
awplus# configure terminal
awplus(config)# interface port1.0.2
awplus(config-if)# spanning-tree mst instance 3
```

To remove instance 3 from a switch port, use the commands:

```
awplus# configure terminal
awplus(config)# interface port1.0.2
awplus(config-if)# no spanning-tree mst instance 3
```

Related Commands

instance vlan (MSTP)

spanning-tree mst instance path-cost

spanning-tree mst instance priority

spanning-tree mst instance restricted-role

spanning-tree mst instance restricted-tcn

spanning-tree mst instance path-cost

Overview Use this command to set the cost of a path associated with a switch port, for the specified MSTI.

This specifies the switch port's contribution to the cost of a path to the MSTI regional root via that port. This applies when the port is the root port for the MSTI.

Use the **no** variant of this command to restore the default cost value of the path.

Syntax

```
spanning-tree mst instance <instance-id> path-cost <path-cost>
no spanning-tree mst instance <instance-id> path-cost
```

Parameter	Description
<instance-id>	Specify an MSTP instance in the range 1-5.
<path-cost>	Specify the cost of path in the range of <1-200000000>, where a lower path-cost indicates a greater likelihood of the specific interface becoming a root.

Default The default path cost values and the range of recommended path cost values depend on the port speed, as shown in the following table from the IEEE 802.1q-2003 standard.

Port speed	Default path cost	Recommended path cost range
Less than 100 Kb/s	200,000,000	20,000,000-200,000,000
1Mbps	20,000,000	2,000,000-20,000,000
10Mbps	2,000,000	200,000-2,000,000
100 Mbps	200,000	20,000-200,000
1 Gbps	20,000	2,000-20,000
10 Gbps	2,000	200-2,000
100 Gbps	200	20-200
1Tbps	20	2-200
10 Tbps	2	2-20

Mode Interface Configuration mode for a switch port interface only.

Usage Before you can use this command to set a path-cost in a VLAN configuration, you must explicitly add an MST instance to a port using the spanning-tree mst instance command.

Examples To set a path cost of 1000 on instance 3, use the commands:

```
awplus# configure terminal
awplus(config)# interface port1.0.2
awplus(config-if)# spanning-tree mst instance 3 path-cost 1000
```

To return the path cost to its default value on instance 3, use the commands:

```
awplus# configure terminal
awplus(config)# interface port1.0.2
awplus(config-if)# no spanning-tree mst instance 3 path-cost
```

Related Commands

instance vlan (MSTP)

spanning-tree mst instance

spanning-tree mst instance priority

spanning-tree mst instance restricted-role

spanning-tree mst instance restricted-tcn

spanning-tree mst instance priority

Overview Use this command in Interface Configuration mode for a switch port interface only to set the port priority for an MST instance (MSTI).

Use the **no** variant of this command to restore the default priority value (128).

Syntax

```
spanning-tree mst instance <instance-id> priority <priority>
no spanning-tree mst instance <instance-id> [priority]
```

Parameter	Description
<instance-id>	Specify an MSTP instance in the range 1-5.
<priority>	This must be a multiple of 16 and within the range <0-240>. A lower priority indicates greater likelihood of the port becoming the root port.

Default The default is 128.

Mode Interface Configuration mode for a switch port interface.

Usage This command sets the value of the priority field contained in the port identifier. The MST algorithm uses the port priority when determining the root port for the switch in the MSTI. The port with the lowest value has the highest priority, so it will be chosen as root port over a port that is equivalent in all other aspects but with a higher priority value.

Examples To set the priority to 112 on instance 3, use the commands:

```
awplus# configure terminal
awplus(config)# interface port1.0.2
awplus(config-if)# spanning-tree mst instance 3 priority 112
```

To return the priority to its default value of 128 on instance 3, use the commands:

```
awplus# configure terminal
awplus(config)# interface port1.0.2
awplus(config-if)# no spanning-tree mst instance 3 priority
```

Related Commands

instance vlan (MSTP)

spanning-tree priority (port priority)

spanning-tree mst instance

spanning-tree mst instance path-cost

spanning-tree mst instance restricted-role

spanning-tree mst instance restricted-tcn

spanning-tree mst instance restricted-role

Overview Use this command in Interface Configuration mode for a switch port interface only to enable the restricted role for an MSTI (Multiple Spanning Tree Instance) on a switch port. Configuring the restricted role for an MSTI on a switch port prevents the switch port from becoming the root port in a spanning tree topology.

Use the **no** variant of this command to disable the restricted role for an MSTI on a switch port. Removing the restricted role for an MSTI on a switch port allows the switch port to become the root port in a spanning tree topology.

Syntax

```
spanning-tree mst instance <instance-id> restricted-role
no spanning-tree mst instance <instance-id> restricted-role
```

Parameter	Description
<instance-id>	Specify an MSTP instance in the range 1-5. The MST instance must have already been created using the instance vlan (MSTP) command.

Default The restricted role for an MSTI instance on a switch port is disabled by default.

Mode Interface Configuration mode for a switch port interface only.

Usage The root port is the port providing the best path from the bridge to the root bridge. Use this command to disable a port from becoming a root port. Use the **no** variant of this command to enable a port to become a root port. See the STP Feature Overview and Configuration Guide for root port information.

Examples To prevent a switch port from becoming the root port, use the commands:

```
awplus# configure terminal
awplus(config)# interface port1.0.2
awplus(config-if)# spanning-tree mst instance 3 restricted-role
```

To stop preventing the switch port from becoming the root port, use the commands:

```
awplus# configure terminal
awplus(config)# interface port1.0.2
awplus(config-if)# no spanning-tree mst instance 3
restricted-role
```

Related Commands

instance vlan (MSTP)

spanning-tree priority (port priority)

spanning-tree mst instance

spanning-tree mst instance path-cost

spanning-tree mst instance restricted-tcn

spanning-tree mst instance restricted-tcn

Overview Use this command to prevent a switch port from propagating received topology change notifications and topology changes to other switch ports. This is named restricted TCN (Topology Change Notification). A TCN is a simple Bridge Protocol Data Unit (BPDU) that a bridge sends out to its root port to signal a topology change.

Use the **no** variant of this command to stop preventing the switch port from propagating received topology change notifications and topology changes to other switch ports for the specified MSTI (Multiple Spanning Tree Instance).

The restricted TCN setting applies only to the specified MSTI (Multiple Spanning Tree Instance).

Syntax

```
spanning-tree mst instance <instance-id> restricted-tcn
no spanning-tree mst instance <instance-id> restricted-tcn
```

Parameter	Description
<instance-id>	Specify an MSTP instance in the range 1-5. The MST instance must have already been created using the instance vlan (MSTP) command.

Default Disabled. By default, switch ports propagate TCNs.

Mode Interface Configuration mode for a switch port interface only.

Examples To prevent a switch port from propagating received topology change notifications and topology changes to other switch ports, use the commands:

```
awplus# configure terminal
awplus(config)# interface port1.0.2
awplus(config-if)# spanning-tree mst instance 3 restricted-tcn
```

To stop preventing a switch port from propagating received topology change notifications and topology changes to other switch ports, use the commands:

```
awplus# configure terminal
awplus(config)# interface port1.0.2
awplus(config-if)# no spanning-tree mst instance 3
restricted-tcn
```

Related Commands

instance vlan (MSTP)

spanning-tree priority (port priority)

spanning-tree mst instance

spanning-tree mst instance path-cost

spanning-tree mst instance restricted-role

spanning-tree path-cost

Overview Use this command in Interface Configuration mode for a switch port interface only to set the cost of a path for the specified port. This value then combines with others along the path to the root bridge in order to determine the total cost path value from the particular port, to the root bridge. The lower the numeric value, the higher the priority of the path. This applies when the port is the root port.

Use this command for RSTP, STP or MSTP. When MSTP mode is configured, this will apply to the port's path cost for the CIST.

Syntax

```
spanning-tree path-cost <pathcost>
no spanning-tree path-cost
```

Parameter	Description
<pathcost>	<1-200000000> The cost to be assigned to the port.

Default The default path cost values and the range of recommended path cost values depend on the port speed, as shown in the following table from the IEEE 802.1q-2003 and IEEE 802.1d-2004 standards.

Port speed	Default path cost	Recommended path cost range
Less than 100 Kb/s	200,000,000	20,000,000-200,000,000
1Mbps	20,000,000	2,000,000-20,000,000
10Mbps	2,000,000	200,000-2,000,000
100 Mbps	200,000	20,000-200,000
1 Gbps	20,000	2,000-20,000
10 Gbps	2,000	200-2, 000
100 Gbps	200	20-200
1Tbps	20	2-200
10 Tbps	2	2-20

Mode Interface Configuration mode for switch port interface only.

Example

```
awplus# configure terminal
awplus(config)# interface port1.0.2
awplus(config-if)# spanning-tree path-cost 123
```

spanning-tree portfast (STP)

Overview Use this command in Interface Configuration mode for a switch port interface only to set a port as an edge-port. The portfast feature enables a port to rapidly move to the forwarding state, without having first to pass through the intermediate spanning tree states. This command has the same effect as the spanning-tree edgeport (RSTP and MSTP) command, but the configuration displays differently in the output of some show commands.

NOTE: *You can run either of two additional parameters with this command. To simplify the syntax these are documented as separate commands. See the following additional portfast commands:*

- spanning-tree portfast bpdu-filter command
- spanning-tree portfast bpdu-guard command.

You can obtain the same effect by running the spanning-tree edgeport (RSTP and MSTP) command. However, the configuration output may display differently in some show commands.

Use the **no** variant of this command to set a port to its default state (not an edge-port).

Syntax

```
spanning-tree portfast
no spanning-tree portfast
```

Default Not an edge port.

Mode Interface Configuration mode for a switch port interface only.

Usage Portfast makes a port move from a blocking state to a forwarding state, bypassing both listening and learning states. The portfast feature is meant to be used for ports connected to end-user devices. Enabling portfast on ports that are connected to a workstation or server allows devices to connect to the network without waiting for spanning-tree to converge.

For example, you may need hosts to receive a DHCP address quickly and waiting for STP to converge would cause the DHCP request to time out. Ensure you do not use portfast on any ports connected to another device to avoid creating a spanning-tree loop on the network.

Use this command on a switch port that connects to a LAN with no other bridges attached. An edge port should never receive BPDUs. Therefore if an edge port receives a BPDU, the portfast feature takes one of three actions.

- Cease to act as an edge port and pass BPDUs as a member of a spanning tree network (spanning-tree portfast (STP) command disabled).
- Filter out the BPDUs and pass only the data and continue to act as a edge port (spanning-tree portfast bpdu-filter command enabled).
- Block the port to all BPDUs and data (spanning-tree portfast bpdu-guard command enabled).

Example

```
awplus# configure terminal
awplus(config)# interface port1.0.2
awplus(config-if)# spanning-tree portfast
```

Related Commands

spanning-tree edgeport (RSTP and MSTP)

show spanning-tree

spanning-tree portfast bpdu-filter

spanning-tree portfast bpdu-guard

spanning-tree portfast bpdu-filter

Overview This command sets the bpdu-filter feature and applies a filter to any BPDUs (Bridge Protocol Data Units) received. Enabling this feature ensures that configured ports will not transmit any BPDUs and will ignore (filter out) any BPDUs received. BPDU Filter is not enabled on a port by default.

Using the **no** variant of this command to turn off the bpdu-filter, but retain the port's status as an enabled port. If the port then receives a BPDU it will change its role from an **edge-port** to a **non edge-port**.

Syntax (Global Configuration)

```
spanning-tree portfast bpdu-filter
no spanning-tree portfast bpdu-filter
```

Syntax (Interface Configuration)

```
spanning-tree portfast bpdu-filter {default|disable|enable}
no spanning-tree portfast bpdu-filter
```

Parameter	Description	
`bpdu-filter`	A port that has bpdu-filter enabled will not transmit any BPDUs and will ignore any BPDUs received. This port type has one of the following parameters (in Interface Configuration mode):	
	`default`	Takes the setting that has been configured for the whole device, i.e. the setting made from the Global configuration mode.
	`disable`	Turns off BPDU filter.
	`enable`	Turns on BPDU filter.

Default BPDU Filter is not enabled on any ports by default.

Mode Global Configuration and Interface Configuration

Usage This command filters the BPDUs and passes only data to continue to act as an edge port. Using this command in Global Configuration mode applies the portfast bpdu-filter feature to all ports on the device. Using it in Interface mode applies the feature to a specific port, or range of ports.The command will operate in both RSTP and MSTP networks.

Use the show spanning-tree command to display status of the bpdu-filter parameter for the switch ports.

Example To enable STP BPDU filtering in Global Configuration mode, enter the commands:

```
awplus# configure terminal
awplus(config)# spanning-tree portfast bpdu-filter
```

To enable STP BPDU filtering in Interface Configuration mode, enter the commands:

```
awplus# configure terminal
awplus(config)# interface port1.0.2
awplus(config-if)# spanning-tree portfast bpdu-filter enable
```

Related Commands

spanning-tree edgeport (RSTP and MSTP)

show spanning-tree

spanning-tree portfast (STP)

spanning-tree portfast bpdu-guard

spanning-tree portfast bpdu-guard

Overview The AR3050S and AR4050S devices don't support BPDU protection in 5.4.5-0.1 release.

This command applies a BPDU (Bridge Protocol Data Unit) guard to the port. A port with the bpdu-guard feature enabled will block all traffic (BPDUs and user data), if it starts receiving BPDUs.

Use this command in Global Configuration mode to apply BPDU guard to all ports on the device. Use this command in Interface mode for an individual interface or a range of interfaces specified. BPDU Guard is not enabled on a port by default.

Use the **no** variant of this command to disable the BPDU Guard feature on a device in Global Configuration mode or to disable the BPDU Guard feature on a port in Interface mode.

Syntax (Global Configuration)

```
spanning-tree portfast bpdu-guard
no spanning-tree portfast bpdu-guard
```

Syntax (Interface Configuration)

```
spanning-tree portfast bpdu-guard {default|disable|enable}
no spanning-tree portfast bpdu-guard
```

Parameter	Description	
`bpdu-guard`	A port that has bpdu-guard turned on will enter the STP blocking state if it receives a BPDU. This port type has one of the following parameters (in Interface Configuration mode):	
	`default`	Takes the setting that has been configured for the whole device, i.e. the setting made from the Global configuration mode.
	`disable`	Turns off BPDU guard.
	`enable`	Turns on BPDU guard and will also set the port as an edge port.

Default BPDU Guard is not enabled on any ports by default.

Mode Global Configuration or Interface Configuration

Usage This command blocks the port(s) to all devices and data when enabled. BPDU Guard is a port-security feature that changes how a portfast-enabled port behaves if it receives a BPDU. When **bpdu-guard** is set, then the port shuts down if it receives a BPDU. It does not process the BPDU as it is considered suspicious. When **bpdu-guard** is not set, then the port will negotiate spanning-tree with the device sending the BPDUs. By default, bpdu- guard is not enabled on a port.

You can configure a port disabled by the bpdu-guard to re-enable itself after a specific time interval. This interval is set with the spanning-tree errdisable-timeout

interval command. If you do not use the **errdisable-timeout** feature, then you will need to manually re-enable the port by using the **no shutdown** command.

Use the show spanning-tree command to display the device and port configurations for the BPDU Guard feature. It shows both the administratively configured and currently running values of bpdu-guard.

Example To enable STP BPDU guard in Global Configuration mode, enter the below commands:

```
awplus# configure terminal
awplus(config)# spanning-tree portfast bpdu-guard
```

To enable STP BPDU guard in Interface Configuration mode, enter the below commands:

```
awplus# configure terminal
awplus(config)# interface port1.0.2
awplus(config-if)# spanning-tree portfast bpdu-guard enable
```

Related Commands

spanning-tree edgeport (RSTP and MSTP)

show spanning-tree

spanning-tree portfast (STP)

spanning-tree portfast bpdu-filter

spanning-tree priority (bridge priority)

Overview Use this command to set the bridge priority for the device. A lower priority value indicates a greater likelihood of the device becoming the root bridge.

Use this command for RSTP, STP or MSTP. When MSTP mode is configured, this will apply to the CIST.

Use the **no** variant of this command to reset it to the default.

Syntax

```
spanning-tree priority <priority>
no spanning-tree priority
```

Parameter	Description
<priority>	<0-61440> The bridge priority, which will be rounded to a multiple of 4096.

Default The default priority is 32678.

Mode Global Configuration

Usage To force a particular device to become the root bridge use a lower value than other devices in the spanning tree.

Example

```
awplus# configure terminal
awplus(config)# spanning-tree priority 4096
```

Related Commands spanning-tree mst instance priority

show spanning-tree

spanning-tree priority (port priority)

Overview Use this command in Interface Configuration mode for a switch port interface only to set the port priority for port. A lower priority value indicates a greater likelihood of the port becoming part of the active topology.

Use this command for RSTP, STP, or MSTP. When the device is in MSTP mode, this will apply to the CIST.

Use the **no** variant of this command to reset it to the default.

Syntax

```
spanning-tree priority <priority>
no spanning-tree priority
```

Parameter	Description
<priority>	<0-240>, in increments of 16. The port priority, which will be rounded down to a multiple of 16.

Default The default priority is 128.

Mode Interface Configuration mode for a switch port interface only.

Usage To force a port to be part of the active topology (for instance, become the root port or a designated port) use a lower value than other ports on the device. (This behavior is subject to network topology, and more significant factors, such as bridge ID.)

Example

```
awplus# configure terminal
awplus(config)# interface port1.0.2
awplus(config-if)# spanning-tree priority 16
```

Related Commands

spanning-tree mst instance priority

spanning-tree priority (bridge priority)

show spanning-tree

spanning-tree restricted-role

Overview Use this command in Interface Configuration mode for a switch port interface only to restrict the port from becoming a root port.

Use the **no** variant of this command to disable the restricted role functionality.

Syntax
```
spanning-tree restricted-role
no spanning-tree restricted-role
```

Default The restricted role is disabled.

Mode Interface Configuration mode for a switch port interface only.

Example
```
awplus# configure terminal
awplus(config)# interface port1.0.2
awplus(config-if)# spanning-tree restricted-role
```

spanning-tree restricted-tcn

Overview Use this command in Interface Configuration mode for a switch port interface only to prevent TCN (Topology Change Notification) BPDUs (Bridge Protocol Data Units) from being sent on a port. If this command is enabled, after a topology change a bridge is prevented from sending a TCN to its designated bridge.

Use the **no** variant of this command to disable the restricted TCN functionality.

Syntax

```
spanning-tree restricted-tcn
no spanning-tree restricted-tcn
```

Default The restricted TCN is disabled.

Mode Interface Configuration mode for a switch port interface only.

Example

```
awplus# configure terminal
awplus(config)# interface port1.0.2
awplus(config-if)# spanning-tree restricted-tcn
```

spanning-tree transmit-holdcount

Overview Use this command to set the maximum number of BPDU transmissions that are held back.

Use the **no** variant of this command to restore the default transmit hold-count value.

Syntax

```
spanning-tree transmit-holdcount
no spanning-tree transmit-holdcount
```

Default Transmit hold-count default is 3.

Mode Global Configuration

Example

```
awplus# configure terminal
awplus(config)# spanning-tree transmit-holdcount
```

undebug mstp

Overview This command applies the functionality of the no debug mstp (RSTP and STP) command.

17 Link Aggregation Commands

Introduction

Overview

This chapter provides an alphabetical reference of commands used to configure a static channel group (static aggregator) and dynamic channel group (LACP channel group, etherchannel or LACP aggregator). Link aggregation is also sometimes referred to as channeling.

NOTE: *AlliedWare Plus™ supports IEEE 802.3ad link aggregation and uses the Link Aggregation Control Protocol (LACP). LACP does not interoperate with devices that use Port Aggregation Protocol (PAgP).*

Link aggregation does not necessarily achieve exact load balancing across the links. The load sharing algorithm is designed to ensure that any given data flow always goes down the same link. It also aims to spread data flows across the links as evenly as possible.

For example, for a 2 Gbps LAG that is a combination of two 1 Gbps ports, any one flow of traffic can only ever reach a maximum throughput of 1 Gbps. However, the hashing algorithm should spread the flows across the links so that when many flows are operating, the full 2 Gbps can be utilized.

For a description of static and dynamic link aggregation (LACP), and configuration examples, see the Link Aggregation Feature Overview and Configuration Guide.

Command List

- "channel-group" on page 551
- "clear lacp counters" on page 553
- "debug lacp" on page 554
- "lacp global-passive-mode enable" on page 555
- "lacp port-priority" on page 556
- "lacp system-priority" on page 557
- "lacp timeout" on page 558
- "show debugging lacp" on page 560
- "show diagnostic channel-group" on page 561

- "show etherchannel" on page 562
- "show etherchannel detail" on page 563
- "show etherchannel summary" on page 564
- "show lacp sys-id" on page 565
- "show lacp-counter" on page 566
- "show port etherchannel" on page 567
- "show static-channel-group" on page 568
- "static-channel-group" on page 569
- "undebug lacp" on page 571

channel-group

Overview Use this command to either create a new dynamic channel group while at the same time adding a port to it, or to add a port to an existing dynamic channel group. Note that you must also set the LACP mode to be either active or passive.

You can create up to 2 dynamic (LACP) channel groups (or up to 2 static channel groups).

Use the **no** variant of this command to turn off link aggregation on the device port. You will be returned to Global Configuration mode from Interface Configuration mode.

Syntax

```
channel-group <dynamic-channel-group-number> mode
{active|passive}
```

```
no channel-group
```

Parameter	Description
<dynamic-channel-group-number>	<1-32> Specify a dynamic channel group number for an LACP link. You can create up to 2 dynamic (LACP) channel groups (in addition to up to 2 static channel groups). Each channel group can include up to 4 ports.
active	Enables initiation of LACP negotiation on a port. The port will transmit LACP dialogue messages whether or not it receives them from the partner device.
passive	Disables initiation of LACP negotiation on a port. The port will only transmit LACP dialogue messages if the partner device is transmitting them, i.e., the partner is in the active mode.

Mode Interface Configuration

Usage All the device ports in a channel-group must belong to the same VLANs, have the same tagging status, and can only be operated on as a group. All device ports within a channel group must have the same port speed and be in full duplex mode.

Once the LACP channel group has been created, it is treated as a device port, and can be referred to in most other commands that apply to device ports.

To refer to an LACP channel group in other LACP commands, use the channel group number. To specify an LACP channel group (LACP aggregator) in other commands, prefix the channel group number with **po**. For example, 'po2' refers to the LACP channel group with channel group number 2.

For more information about LACP, see the Link Aggregation Feature Overview and Configuration Guide which is available on our website at alliedtelesis.com.

Examples

To add device port1.0.6 to a newly created LACP channel group 2 use the commands below:

```
awplus# configure terminal
awplus(config)# interface port1.0.6
awplus(config-if)# channel-group 2 mode active
```

To remove device port1.0.6 from any created LACP channel groups use the command below:

```
awplus# configure terminal
awplus(config)# interface port1.0.6
awplus(config-if)# no channel-group
```

To reference channel group 2 as an interface, use the following commands:

```
awplus# configure terminal
awplus(config)# interface po2
awplus(config-if)#
```

Related Commands

show etherchannel

show etherchannel detail

show etherchannel summary

show port etherchannel

clear lacp counters

Overview Use this command to clear all counters of all present LACP aggregators (channel groups) or a given LACP aggregator.

Syntax

```
clear lacp [<1-32>] counters
```

Parameter	Description
<1-32>	Channel-group number.

Mode Privileged Exec

Example

```
awplus# clear lacp 2 counters
```

debug lacp

Overview Use this command to enable all LACP troubleshooting functions.

Use the **no** variant of this command to disable this function.

Syntax

```
debug lacp {all|cli|event|ha|packet|sync|timer[detail]}
no debug lacp {all|cli|event|ha|packet|sync|timer[detail]}
```

Parameter	Description
`all`	Turn on all debugging for LACP.
`cli`	Specifies debugging for CLI messages. Echoes commands to the console.
`event`	Specifies debugging for LACP events. Echoes events to the console.
`ha`	Specifies debugging for HA (High Availability) events. Echoes High Availability events to the console.
`packet`	Specifies debugging for LACP packets. Echoes packet contents to the console.
`sync`	Specified debugging for LACP synchronization. Echoes synchronization to the console.
`timer`	Specifies debugging for LACP timer. Echoes timer expiry to the console.
`detail`	Optional parameter for LACP timer-detail. Echoes timer start/stop details to the console.

Mode Privileged Exec and Global Configuration

Examples

```
awplus# debug lacp timer detail
awplus# debug lacp all
```

Related Commands show debugging lacp

undebug lacp

lacp global-passive-mode enable

Overview Use this command to enable LACP channel-groups to dynamically self-configure when they are connected to another device that has LACP channel-groups configured with Active Mode.

Syntax

```
lacp global-passive-mode enable
no lacp global-passive-mode enable
```

Default Enabled

Mode Global Configuration

Usage Do not mix LACP configurations (manual and dynamic). When LACP global passive mode is turned on (by using the **lacp global-passive-mode enable** command), we do not recommend using a mixed configuration in a LACP channel-group; i.e. some links are manually configured (by the **channel-group** command) and others are dynamically learned in the same channel-group.

Example To enable global passive mode for LACP channel groups, use the command:

```
awplus(config)# lacp global-passive-mode enable
```

To disable global passive mode for LACP channel groups, use the command:

```
awplus(config)# no lacp global-passive-mode enable
```

Related Commands show etherchannel

show etherchannel detail

lacp port-priority

Overview Use this command to set the priority of a device port. Ports are selected for aggregation based on their priority, with the higher priority (numerically lower) ports selected first.

Use the **no** variant of this command to reset the priority of port to the default.

Syntax

```
lacp port-priority <1-65535>
no lacp port-priority
```

Parameter	Description
<1-65535>	Specify the LACP port priority.

Default The default is 32768.

Mode Interface Configuration

Example

```
awplus# configure terminal
awplus(config)# interface port1.0.5
awplus(config-if)# lacp port-priority 34
```

lacp system-priority

Overview Use this command to set the system priority of a local system. This is used in determining the system responsible for resolving conflicts in the choice of aggregation groups.

Use the **no** variant of this command to reset the system priority of the local system to the default.

Syntax

```
lacp system-priority <1-65535>
no lacp system-priority
```

Parameter	Description
<1-65535>	LACP system priority. Lower numerical values have higher priorities.

Default The default is 32768.

Mode Global Configuration

Example

```
awplus# configure terminal
awplus(config)# lacp system-priority 6700
```

lacp timeout

Overview Use this command to set the short or long timeout on a port. Ports will time out of the aggregation if three consecutive updates are lost.

Syntax

```
lacp timeout {short|long}
```

Parameter	Description
`timeout`	Number of seconds before invalidating a received LACP data unit (DU).
`short`	LACP short timeout. The **short** timeout value is **1** second.
`long`	LACP long timeout. The **long** timeout value is **30** seconds.

Default The default is **long** timeout (30 seconds).

Mode Interface Configuration

Usage This command enables the device to indicate the rate at which it expects to receive LACPDUs from its neighbor.

If the timeout is set to **long**, then the device expects to receive an update every **30** seconds, and this will time a port out of the aggregation if no updates are seen for 90 seconds (i.e. 3 consecutive updates are lost).

If the timeout is set to **short**, then the device expects to receive an update every second, and this will time a port a port out of the aggregation if no updates are seen for 3 seconds (i.e. 3 consecutive updates are lost).

The device indicates its preference by means of the Timeout field in the Actor section of its LACPDUs. If the Timeout field is set to 1, then the device has set the **short** timeout. If the Timeout field is set to 0, then the device has set the **long** timeout.

Setting the **short** timeout enables the device to be more responsive to communication failure on a link, and does not add too much processing overhead to the device (1 packet per second).

NOTE: *It is not possible to configure the rate that the device sends LACPDUs; the device must send at the rate which the neighbor indicates it expects to receive LACPDUs.*

Examples The following commands set the LACP long timeout period for 30 seconds on `port1.0.2`.

```
awplus# configure terminal
awplus(config)# interface port1.0.2
awplus(config-if)# lacp timeout long
```

The following commands set the LACP short timeout for 1 second on `port1.0.2`.

```
awplus# configure terminal
awplus(config)# interface port1.0.2
awplus(config-if)# lacp timeout short
```

show debugging lacp

Overview Use this command to display the LACP debugging option set.

For information on filtering and saving command output, see the "Getting Started with AlliedWare Plus" Feature Overview and Configuration Guide.

Syntax

```
show debugging lacp
```

Mode User Exec and Privileged Exec

Example

```
awplus# show debugging lacp
```

Output Figure 17-1: Example output from the **show debugging lacp** command

```
LACP debugging status:
 LACP timer debugging is on
 LACP timer-detail debugging is on
 LACP cli debugging is on
 LACP packet debugging is on
 LACP event debugging is on
 LACP sync debugging is on
```

Related Commands debug lacp

show diagnostic channel-group

Overview This command displays dynamic and static channel group interface status information. The output of this command is useful for Allied Telesis authorized service personnel for diagnostic purposes.

For information on filtering and saving command output, see the "Getting Started with AlliedWare Plus" Feature Overview and Configuration Guide.

Syntax
```
show diagnostic channel-group
```

Mode User Exec and Privileged Exec

Example
```
awplus# show diagnostic channel-group
```

Output Figure 17-2: Example output from the **show diagnostic channel-group** command

```
awplus# show diagnostic channel-group

Channel Group Info based on NSM:
Note: Pos - position in hardware table
-------------------------------------------------------------
Dev  Interface  IfIndex  Member port  IfIndex  Active  Pos
-------------------------------------------------------------
     po1        4601     port1.0.4    5004     No
     po1        4601     port1.0.5    5005     No


Channel Group Info based on HSL:
Note: Pos - position in hardware table
-------------------------------------------------------------
Dev  Interface  IfIndex  Member port  IfIndex  Active  Pos
-------------------------------------------------------------
     po1        4601                           N/a


Channel Group Info based on IPIFWD:
Note: Pos - position in hardware table
-------------------------------------------------------------
Dev  Interface  IfIndex  Member port  IfIndex  Active  Pos
-------------------------------------------------------------
     po1        4601                           N/a


No error found
```

Related Commands show tech-support

show etherchannel

Overview Use this command to display information about a LACP channel specified by the channel group number.

For information on filtering and saving command output, see the "Getting Started with AlliedWare Plus" Feature Overview and Configuration Guide, which is available on our website at alliedtelesis.com.

Syntax

```
show etherchannel [<1-32>]
```

Parameter	Description
<1-32>	Channel-group number.

Mode User Exec and Privileged Exec

Example

```
awplus# show etherchannel
```

Output Figure 17-3: Example output from **show etherchannel**

```
awplus#show etherchannel
LAG Maximum        : 2
LAG Static  Maximum: 2
LAG Dynamic Maximum: 2
LAG Static  Count  : 0
LAG Dynamic Count  : 1
LAG Total   Count  : 1
Lacp Aggregator: po1
Member:
 port1.0.1
 port1.0.2
```

Example

```
awplus# show etherchannel 1
```

Output Figure 17-4: Example output from **show etherchannel** for a particular channel

```
awplus#show etherchannel 1
Aggregator po1 (4601)
 Mac address: 00:00:00:00:00:00
 Admin Key: 0001 - Oper Key 0000
 Receive link count: 0 - Transmit link count: 0
 Individual: 0 - Ready: 0
 Partner LAG: 0x0000,00-00-00-00-00-00
  Link: port1.0.1 (5001) disabled
  Link: port1.0.2 (5002) disabled
```

show etherchannel detail

Overview Use this command to display detailed information about all LACP channels.

For information on filtering and saving command output, see the "Getting Started with AlliedWare Plus" Feature Overview and Configuration Guide, which is available on our website at alliedtelesis.com.

Syntax

```
show etherchannel detail
```

Mode User Exec and Privileged Exec

Example

```
awplus# show etherchannel detail
```

Output Example output from **show etherchannel detail**

```
awplus#show etherchannel detail
Aggregator po1 (IfIndex: 4601)
 Mac address: 00:00:cd:37:05:17
 Admin Key: 0001 - Oper Key 0001
 Receive link count: 2 - Transmit link count: 2
 Individual: 0 - Ready: 1
 Partner LAG: 0x8000,00-00-cd-37-02-9a,0x0001
  Link: port1.0.1 (IfIndex: 8002) synchronized
  Link: port1.0.2 (IfIndex: 20002) synchronized
Aggregator po2 (IfIndex: 4602)
 Mac address: 00:00:cd:37:05:17
 Admin Key: 0002 - Oper Key 0002
 Receive link count: 2 - Transmit link count: 2
 Individual: 0 - Ready: 1
 Partner LAG: 0x8000,ec-cd-6d-aa-c8-56,0x0002
  Link: port1.0.3 (IfIndex: 8001) synchronized
  Link: port1.0.4 (IfIndex: 20001) synchronized
```

show etherchannel summary

Overview Use this command to display a summary of all LACP channels.

For information on filtering and saving command output, see the "Getting Started with AlliedWare Plus" Feature Overview and Configuration Guide, which is available on our website at alliedtelesis.com.

Syntax

```
show etherchannel summary
```

Mode User Exec and Privileged Exec

Example

```
awplus# show etherchannel summary
```

Output Example output from **show etherchannel summary**

```
awplus#show etherchannel summary
Aggregator po10 (IfIndex: 4610)
 Admin Key: 0010 - Oper Key 0010
  Link: port1.0.1 (IfIndex: 7007) synchronized
  Link: port1.0.2 (IfIndex: 8007) synchronized
  Link: port1.0.3 (IfIndex: 11007) synchronized
```

show lacp sys-id

Overview Use this command to display the LACP system ID and priority.

For information on filtering and saving command output, see the "Getting Started with AlliedWare Plus" Feature Overview and Configuration Guide, which is available on our website at alliedtelesis.com.

Syntax

```
show lacp sys-id
```

Mode User Exec and Privileged Exec

Example

```
awplus# show lacp sys-id
```

Output Example output from **show lacp sys-id**

```
System Priority: 0x8000 (32768)
MAC Address: 0200.0034.5684
```

show lacp-counter

Overview Use this command to display the packet traffic on all ports of all present LACP aggregators, or a given LACP aggregator.

For information on filtering and saving command output, see the "Getting Started with AlliedWare Plus" Feature Overview and Configuration Guide, which is available on our website at alliedtelesis.com.

Syntax

```
show lacp-counter [<1-32>]
```

Parameter	Description
<1-32>	Channel-group number.

Mode User Exec and Privileged Exec

Example

```
awplus# show lacp-counter 2
```

Output Example output from **show lacp-counter**

```
% Traffic statistics
Port          LACPDUs          Marker          Pckt err
           Sent     Recv     Sent     Recv     Sent     Recv
% Aggregator po2 (IfIndex: 4604)
port1.0.2   0        0        0        0        0        0
```

show port etherchannel

Overview Use this command to show LACP details of the device port specified.

For information on filtering and saving command output, see the "Getting Started with AlliedWare Plus" Feature Overview and Configuration Guide, which is available on our website at alliedtelesis.com.

Syntax

```
show port etherchannel <port>
```

Parameter	Description
<port>	Name of the device port to display LACP information about.

Mode User Exec and Privileged Exec

Example

```
awplus# show port etherchannel port1.0.2
```

Output Example output from **show port etherchannel**

```
awplus#show port etherchannel port1.0.2
LACP link info: port1.0.2 - 7007
Link: port1.0.2 (IfIndex: 7007)
Aggregator: po10 (IfIndex: 4610)
Receive machine state: Current
Periodic Transmission machine state: Slow periodic
Mux machine state: Collecting/Distributing
Actor Information:                      Partner Information:
 Selected ................. Selected     Partner Sys Priority ....... 0x8000
 Physical Admin Key ..... 2             Partner System .. ec-cd-6d-d1-64-d0
 Port Key ..... 10                      Port Key ..... 10
 Port Priority ..... 32768              Port Priority ..... 32768
 Port Number ..... 7007                 Port Number ..... 5001
 Mode ..... Active                      Mode ..... Active
 Timeout ..... Long                     Timeout ..... Long
 Individual ..... Yes                   Individual ..... Yes
 Synchronised ..... Yes                 Synchronised ..... Yes
 Collecting ..... Yes                   Collecting ..... Yes
 Distributing ..... Yes                 Distributing ..... Yes
 Defaulted ..... No                     Defaulted ..... No
 Expired ..... No                       Expired ..... No
```

show static-channel-group

Overview Use this command to display all configured static channel groups and their corresponding member ports. Note that a static channel group is the same as a static aggregator.

For information on filtering and saving command output, see the "Getting Started with AlliedWare Plus" Feature Overview and Configuration Guide, which is available on our website at alliedtelesis.com.

Syntax
```
show static-channel-group
```

Mode User Exec and Privileged Exec

Example
```
awplus# show static-channel-group
```

Output Example output from **show static-channel-group**

```
awplus#show static-channel-group
LAG Maximum         : 2
LAG Static  Maximum: 2
LAG Dynamic Maximum: 2
LAG Static  Count   : 0
LAG Dynamic Count   : 1
LAG Total   Count   : 1
```

Related Commands static-channel-group

static-channel-group

Overview Use this command to create a static channel group, or add a member port to an existing static channel group. Static channel groups are also known as static aggregators.

You can create up to 2 static channel groups (or up to 2 dynamic channel groups).

Use the **no** variant of this command to remove the device port from the static channel group.

Syntax

```
static-channel-group <static-channel-group-number>
[member-filters]
```

```
no static-channel-group
```

Parameter	Description
<static-channel-group-number>	<1-96> Static channel group number.
member-filters	Allow QoS and ACL settings to be configured on the aggregator's individual member ports, instead of the aggregator itself. This configuration is required when using QoS Storm Protection on a static aggregator.

Mode Interface Configuration

Usage This command adds the device port to the static channel group with the specified channel group number. If the channel group does not exist, it is created, and the port is added to it. The **no** prefix detaches the port from the static channel group. If the port is the last member to be removed, the static channel group is deleted.

All the ports in a channel group must have the same VLAN configuration: they must belong to the same VLANs and have the same tagging status, and can only be operated on as a group.

Once the static channel group has been created, it is treated as a device port, and can be referred to in other commands that apply to device ports.

To refer to a static channel group in other static channel group commands, use the channel group number. To specify a static channel group in other commands, prefix the channel group number with **sa**. For example, 'sa2' refers to the static channel group with channel group number 2.

Examples To define static channel group 2 on a device port, use the commands:

```
awplus# configure terminal
awplus(config)# interface port1.0.4
awplus(config-if)# static-channel-group 2
```

To reference static channel group 2 as an interface, use the commands:

```
awplus# configure terminal
awplus(config)# interface sa2
awplus(config-if)#
```

Related Commands show static-channel-group

undebug lacp

Overview This command applies the functionality of the no debug lacp command.

18 802.1Q Encapsulation Commands

Introduction

This chapter provides an alphabetical reference of commands used to configure 802.1Q Encapsulation. For more information, see the AAA and Port Authentication Feature Overview and Configuration Guide.

Command List

- "encapsulation dot1q" on page 573

encapsulation dot1q

Overview Use this command to enable 802.1Q encapsulation on Ethernet interfaces or L2 tunnel interfaces—OpenVPN and L2TPv3 Ethernet pseudowire.

Use the no variant of this command to disable 802.1Q encapsulation for the VLAN identified by the VLAN ID (VID).

Syntax

```
encapsulation dot1q <vid>
no encapsulation dot1q <vid>
```

Parameter	Description
<vid>	Enter a VLAN ID in the range from 1 through 4094. The VLAN ID identifies the VLAN to which the frames belong. It also identifies the index of the subinterface of the Ethernet interface or Layer 2 tunnel interface.

Default 802.1Q encapsulation is disabled by default on any Ethernet interface or Layer 2 tunnel interface.

Mode Interface Configuration

Usage You should enter the Ethernet interface or tunnel interface configuration mode to enable 802.1Q encapsulation and configure the VID first. Then you can use the VID to configure the subinterface associated with the Ethernet interface or tunnel interface. Subinterfaces are logical interfaces. The subinterface index must be the same as the VID. For example, if you configure VID 1 for eth1, then the subinterface for eth1 is eth1.1. If you configure VID 2 for tunnel20, then the subinterface for tunnel20 is tunnel20.2.

Examples To enable 802.1Q encapsulation on Ethernet interface eth1, use the commands:

```
awplus#configure terminal
awuplus(config)#interface eth1
awplus(config-if)#encapsulation dot1q 1
```

To enable 802.1Q encapsulation on tunnel interface tunnel20, use the commands:

```
awplus#configure terminal
awuplus(config)#interface tunnel20
awplus(config-if)#encapsulation dot1q 2
```

To enable multiple 802.1Q encapsulation on Ethernet interface eth2, use the commands:

```
awplus#configure terminal
awuplus(config)#interface eth2
awplus(config-if)#encapsulation dot1q 1
awplus(config-if)#encapsulation dot1q 2
awplus(config-if)#encapsulation dot1q 3
```

To disable 802.1Q encapsulation on eth1, use the commands:

```
awplus#configure terminal
awuplus(config)#interface eth1
awuplus(config-if)#no encapsulation dot1q 1
```

Related Commands interface (to configure)

Validation Commands show interface

19 PPP Commands

Introduction

Overview This chapter provides an alphabetical reference of commands used to configure and validate the PPP (Point-To-Point) protocol. For more information about PPP, see the Point-to-Point Protocol (PPP) Feature Overview and_Configuration Guide.

Command List

- "debug ppp" on page 577
- "encapsulation ppp" on page 580
- "interface (PPP)" on page 582
- "ip address negotiated" on page 583
- "ip tcp adjust-mss" on page 585
- "ip unnumbered" on page 587
- "ipv6 tcp adjust-mss" on page 589
- "keepalive (PPP)" on page 591
- "mtu (PPP)" on page 593
- "peer default ip address" on page 594
- "peer neighbor-route" on page 596
- "ppp authentication" on page 598
- "ppp authentication refuse" on page 600
- "ppp hostname" on page 602
- "ppp ipcp dns" on page 604
- "ppp ipcp dns suffix-list" on page 606
- "ppp ipcp ip-override" on page 608
- "ppp password" on page 609
- "ppp service-name (PPPoE)" on page 610

- "ppp timeout idle" on page 611
- "ppp username" on page 612
- "show debugging ppp" on page 613
- "show interface (PPP)" on page 614
- "undebug ppp" on page 618

debug ppp

Overview Use this command to enable PPP protocol debugging on an optionally specified PPP interface or range of PPP interfaces to analyze PPP behavior when diagnosing PPP connectivity issues. If no interface is specified then debugging for all PPP interfaces is enabled.

Use the **no** variant of this command to disable PPP protocol debugging on the specified PPP interface. If no PPP interface is specified then PPP debugging for all PPP interfaces is disabled.

Syntax

```
debug ppp [interface <ppp-interface-list>]
no debug ppp [interface <ppp-interface-list>]
```

Parameter	Description
<ppp-interface- list>	Specify a PPP interface or a range of PPP interfaces in the range ppp<0-255>. Use a hyphen between PPP interfaces to include all PPP interfaces in a given range, or use commas between PPP interfaces to specify non-contiguous PPP interfaces.

Default No diagnostic messages are enabled for PPP debugging. PPP debugging is disabled by default.

Mode Global Configuration and Privileged Exec

Usage Debugging messages are sent to the logging system and can be viewed in log output, filtered in permanent or buffered logs, and viewed on the terminal using the terminal monitor command. See the status of PPP debugging with the show debugging ppp command.

Note that debugging output for PPP shows packet debugging and events debugging, see output below.

Note that disabling all debugging with the no debug all or the undebug all commands also disables PPP debugging configured with this command.

Note that the negated form of this command is an alias of the undebug ppp command.

Examples To enable PPP debugging on all PPP interfaces and send diagnostic messages to the system log, use the below command:

```
awplus# debug ppp
```

To enable PPP debugging on PPP interfaces `ppp0` through `ppp2` and display them on the console, use the below commands:

```
awplus# terminal monitor
awplus# debug ppp interface ppp0-ppp2
```

Output of packet debugging

Figure 19-1: Example output from the **debug ppp** command on the console

```
awplus#terminal monitor
awplus#debug ppp

05:35:46 awplus pppd[24767]: [ppp0] [05:35:46.901] sent [IPCP
ConfReq id=0x1 <addr
0.0.0.0> <ms-dns1 0.0.0.0> <ms-dns2 0.0.0.0>]
05:35:46 awplus pppd[24767]: [ppp0] [05:35:46.901] sent [IPV6CP
ConfReq id=0x1
<addr fe80::eecd:6dff:fe3a:0d23>]
05:35:46 awplus pppd[24767]: [ppp0] [05:35:46.901] rcvd [LCP
ConfAck id=0x1 <magic
0xd9153444>]
05:35:46 awplus pppd[24767]: [ppp0] [05:35:46.919] rcvd [IPCP
ConfReq id=0x1 <addr
192.168.1.1>]
05:35:46 awplus pppd[24767]: [ppp0] [05:35:46.919] sent [IPCP
ConfAck id=0x1 <addr
192.168.1.1>]
05:35:46 awplus pppd[24767]: [ppp0] [05:35:46.919] rcvd [IPCP
ConfNak id=0x1 <addr
192.168.1.2> <ms-dns1 1.1.1.1> <ms-dns2 2.2.2.2>]
05:35:46 awplus pppd[24767]: [ppp0] [05:35:46.920] sent [IPCP
ConfReq id=0x2 <addr
192.168.1.2> <ms-dns1 1.1.1.1> <ms-dns2 2.2.2.2>]
05:35:46 awplus pppd[24767]: [ppp0] [05:35:46.921] rcvd [LCP
ProtRej id=0x2 80 57
01 01 00 0e 01 0a ee cd 6d ff fe 3a 0d 23]
05:35:46 awplus pppd[24767]: [ppp0] [05:35:46.921] Protocol-Reject
for 'IPv6
Control Protocol' (0x8057) received
05:35:46 awplus pppd[24767]: [ppp0] [05:35:46.922] rcvd [IPCP
ConfAck id=0x2 <addr
192.168.1.2> <ms-dns1 1.1.1.1> <ms-dns2 2.2.2.2>]
02:25:35 awplus pppd[2388]: [ppp1] [02:25:35.990] sent [LCP
EchoReq id=0x3b
magic=0xe1e041db]
02:25:35 awplus pppd[2388]: [ppp1] [02:25:35.991] rcvd [LCP
EchoReq id=0x3b
magic=0xe3e331b1]
02:25:35 awplus pppd[2388]: [ppp1] [02:25:35.991] sent [LCP
EchoRep id=0x3b
magic=0xe1e041db]
02:25:35 awplus pppd[2388]: [ppp1] [02:25:35.992] rcvd [LCP
EchoRep id=0x3b
magic=0xe3e331b1]
```

Output of event debugging

Figure 19-2: Example output from the **debug ppp** command for a PPP interface

```
awplus#terminal monitor
awplus#debug ppp interface ppp0

05:35:43 awplus pppd[24767]: [ppp0] [05:35:43.710] using channel 1
05:35:43 awplus pppd[24767]: [ppp0] [05:35:43.712] Using interface
ppp0
05:35:43 awplus pppd[24767]: [ppp0] [05:35:43.712] Connect: ppp0
<--> hdlc0
05:35:46 awplus PPP: IP is up on interface ppp0 [local-IP:
192.168.1.2, remote-IP:
192.168.1.1]
05:35:46 awplus PPP: IPCP [ppp0]: add IP interface [IP-addr:
192.168.1.2, mask: ]
05:35:46 awplus PPP: IPCP [ppp0]: add host route [peer-IP:
192.168.1.1]
05:35:47 awplus PPP: IPCP [ppp0]: add domain name server [DNS:
1.1.1.1]
05:35:47 awplus PPP: IPCP [ppp0]: add domain name server [DNS:
2.2.2.2]
```

To record messages relating to PPP packets in the buffered log, first configure a buffered log filter to select the messages using the commands:

```
awplus# configure terminal
awplus(config)# log buffered level debug program pppd
awplus(config)# end
```

Then configure PPP debugging, using the below command:

```
awplus# debug ppp
```

To disable PPP debugging for all PPP interfaces, use the below command:

```
awplus# no debug ppp
```

Related Commands

terminal monitor

encapsulation ppp

no debug all

ppp authentication

show debugging ppp

show interface (PPP)

undebug all

encapsulation ppp

Overview Use this command to enable PPP encapsulation and create one or more PPP interfaces over Ethernet, a cellular interface, or a L2TPv2 managed VPN.

Use the **no** variant of this command to disable PPP encapsulation and remove the specified PPP interface.

Syntax

```
encapsulation ppp <index>
no encapsulation ppp <index>
```

Parameter	Description
<index>	The PPP interface index number in the range from 0 to 255.

Default No PPP encapsulation or interfaces are configured by default.

Mode Interface Configuration mode for an Ethernet interface (e.g. **interface eth1**), or an Ethernet sub-interface (e.g. **interface eth1.1**), or a cellular interface (e.g. **interface cellular0**).

L2TP Tunnel Configuration mode for an L2TP tunnel (e.g. **l2tp tunnel tunnel0**).

Examples To configure a PPP interface with index 0 for Ethernet interface eth1, use the commands:

```
awplus# configure terminal
awplus(config)# interface eth1
awplus(config-if)# encapsulation ppp 0
```

To shut down the ppp0 interface and remove it from Ethernet interface eth1, use the commands:

```
awplus# configure terminal
awplus(config)# interface ppp0
awplus(config-if)# shutdown
awplus(config-if)# interface eth1
awplus(config-if)# no encapsulation ppp 0
```

To set the L2TP tunnel tunnel1 to encapsulate the PPP interface with index 1, use the commands:

```
awplus# configure terminal
awplus(config)# l2tp tunnel tunnel1
awplus(config-l2tp-tunnel)# encapsulation ppp 1
```

To remove the PPP interface with index 1 from L2TP tunnel tunnel1, use the commands:

```
awplus# configure terminal
awplus(config)# l2tp tunnel tunnel1
awplus(config-l2tp-tunnel)# no encapsulation ppp 1
```

Related Commands

l2tp tunnel

ppp service-name (PPPoE)

show interface (PPP)

interface (PPP)

Overview Use this command to select a PPP interface to configure.

You need to use the encapsulation ppp command to enable PPP encapsulation and create PPP interfaces first.

Syntax

```
interface <PPP-interface-list>
```

Parameter	Description
<PPP-interface-list>	The PPP interfaces or ports to configure. An interface-list can be: • a PPP interface (e.g. ppp0) • a continuous range of PPP interfaces, separated by a hyphen (e.g. `ppp0-ppp2`) • a comma-separated non-continuous list of PPP interfaces (e.g. `ppp0,ppp2`) The specified interfaces must exist.

Mode Global Configuration

Example The following example shows how to enter Interface mode to configure a PPP interface.

```
awplus# configure terminal
awplus(config)# interface ppp0
awplus(config-if)#
```

Related Commands

ip address (IP Addressing and Protocol)

show interface

show interface brief

ip address negotiated

Overview Use this command to obtain an IP address with the peer for a PPP interface via IPCP (Internet Protocol Control Protocol) address negotiation when configuring a PPP link for IP traffic.

Use the **no** variant of this command to remove IP address negotiation settings.

Syntax

```
ip address negotiated [<default-ip-address>]
no ip address negotiated
```

Parameter	Description
<default-ip-addr>	Specify an optional default IP address for use instead of an IP address assigned from the peer that is otherwise configured for a PPP interface.

Default No IP address negotiation with the peer is configured by default.

Mode Interface Configuration for a PPP interface

Usage Use this command to enable the device to automatically negotiate an IP address for a PPP interface, and to enable all remote hosts to access the device using this IP address. When the peer does not send an IP address via IPCP negotiation, the specified default IP address will be used.

Examples To configure the PPP interface `ppp0` to use IPCP to negotiate an IP address for itself, use the below commands:

```
awplus# configure terminal
awplus(config)# interface ppp0
awplus(config-if)# ip address negotiated
```

To configure the PPP interface `ppp0` to a default IP address of `10.9.9.2`, for use when the peer does not send an IP address via IPCP negotiation, use the below commands:

```
awplus# configure terminal
awplus(config)# interface ppp0
awplus(config-if)# ip address negotiated 10.9.9.2
```

To stop the PPP interface `ppp0` from using IPCP to negotiate an IP address for itself, use the below commands:

```
awplus# configure terminal
awplus(config)# interface ppp0
awplus(config-if)# no ip address negotiated
```

Output To verify IPCP address negotiation is configured on PPP interface `ppp0`, use the following command:

```
awplus# show running-config interface ppp0
```

Figure 19-3: Example output from a **show running-config interface** ppp0 to verify IPCP configuration:

```
!
interface ppp0
 ip address negotiated
!
```

Related Commands the show ip interface chapter

encapsulation ppp

peer default ip address

show running-config interface

ip tcp adjust-mss

Overview Use this command to set the Maximum Segment Size (MSS) size for an interface, where MSS is the maximum TCP data packet size that the interface can transmit before fragmentation.

Use the **no** variant of this command to remove a previously specified MSS size for a PPP interface, and restore the default MSS size.

Syntax

```
ip tcp adjust-mss {<mss-size>|pmtu}
no ip tcp adjust-mss
```

Parameter	Description
<mss-size>	<64-1460> Specifies the MSS size in bytes.
pmtu	Adjust TCP MSS automatically with respect to the MTU on the interface.

Default The default setting allows a TCP server or a TCP client to set the MSS value for itself.

Mode Interface Configuration

Usage When a host initiates a TCP session with a server it negotiates the IP segment size by using the MSS option field in the TCP packet. The value of the MSS option field is determined by the Maximum Transmission Unit (MTU) configuration on the host.

You can set a feasible MSS value on the following interfaces:

- PPPoE
- Ethernet
- VTI Tunnels (IPSeC, GRE, IPv6, L2TP, OpenVPN)
- VLAN

Examples To configure an MSS size of 1452 bytes on PPP interface ppp0, use the commands:

```
awplus# configure terminal
awplus(config)# interface ppp0
awplus(config-if)# ip tcp adjust-mss 1452
```

To configure an MSS size of 1452 bytes on Ethernet interface eth1, use the commands:

```
awplus# configure terminal
awplus(config)# interface eth1
awplus(config-if)# ip tcp adjust-mss 1452
```

To restore the MSS size to the default size on PPP interface `ppp0`, use the commands:

```
awplus# configure terminal
awplus(config)# interface ppp0
awplus(config-if)# no ip tcp adjust-mss
```

Related Commands

mtu (PPP)

show interface

show interface (PPP)

show interface tunnel (GRE)

ip unnumbered

Overview Use this command to borrow an IP address from the specified interface, on an unnumbered ppp interface.

Use the **no** variant of this command to remove the borrowed IP address.

Syntax

```
ip unnumbered <interface_name>
no ip unnumbered
```

Parameter	Description
<interface_name>	Name of the Interface from which the IP address is to be borrowed. Valid interface types from which the IP address can be borrowed from are: VLAN, ethernet, loopback and bridge.

Default IP unnumbered is disabled by default.

Mode Interface Configuration for a PPP interface

Usage An unnumbered PPP interface can process IP packets without explicitly assigning an IP address. This is achieved by borrowing the primary IP address from the specified interface. Valid interface types from which the IP address can be borrowed from are: VLAN, ethernet, loopback and bridge.

Examples To borrow an IP address on unnumbered PPP from the vlan2 interface, use the following commands:

```
awplus# configure terminal
awplus(config)# interface vlan2
awplus(config-if)# ip address 6.6.6.6/24
awplus(config-if)# exit
awplus(config)# interface ppp0
awplus(config-if)# ip unnumbered
vlan2
```

To remove the borrowed IP address, use the following commands:

```
awplus# configure terminal
awplus(config)# interface ppp0
awplus(config-if)# no ip unnumbered
```

To verify borrowed address is configured on PPP interface `ppp0`, use the following command:

```
awplus# show interface ppp0
```

Figure 19-4: Example output from a **show interface** ppp0 to verify PPP IP borrow configuration:

```
awplus#show interface ppp0
Interface ppp0
  Link is UP, administrative state is UP
  Hardware is PPP
  Interface is unnumbered. Using IPv4 address of vlan10 (2.2.2.2)
  index 16778240 metric 1 mtu 1492
  <UP,POINT-TO-POINT,RUNNING,NOARP,MULTICAST>
  PPP is running over interface eth2
  LCP Opened IPCP Opened
  MRU(bytes): Local config 1492, Local negotiated 1492, Peer
negotiated 1492
  Magic number: Local config ON, Local negotiated ON, Peer
negotiated ON
  Authentication: Local config None, Local neg None, Peer neg CHAP
  IPv4 addresses: Local config 0.0.0.0
                  Local neg 2.2.2.2, Peer neg 1.1.1.1
  IPv6 Id Local config: 0000:0000:0000:0000
  PPPoE is using the default service
  SNMP link-status traps: Disabled
    input packets 2, bytes 20, dropped 0, multicast packets 0
    output packets 2, bytes 20, multicast packets 0 broadcast
packets 0
  Time since last state change: 0 days 00:00:13
```

Related Commands

show ip interface

show interface tunnel (L2TPv3)

show running-config interface

ipv6 tcp adjust-mss

Overview Use this command to set the IPv6 Maximum Segment Size (MSS) size for an interface, where MSS is the maximum TCP data packet size that the interface can transmit before fragmentation.

Use the **no** variant of this command to remove a previously specified MSS size for a PPP interface, and restore the default MSS size.

Syntax

```
ip tcp adjust-mss {<mss-size>|pmtu}
no ip tcp adjust-mss
```

Parameter	Description
<mss-size>	<64-1460> Specifies the MSS size in bytes.
pmtu	Adjust TCP MSS automatically with respect to the MTU on the interface.

Default The default setting allows a TCP server or a TCP client to set the MSS value for itself.

Mode Interface Configuration

Usage When a host initiates a TCP session with a server it negotiates the IP segment size by using the MSS option field in the TCP packet. The value of the MSS option field is determined by the Maximum Transmission Unit (MTU) configuration on the host.

You can set a feasible MSS value on the following interfaces:

- PPPoE
- Ethernet
- VTI Tunnels (IPSec, GRE, IPv6, L2TP, OpenVPN)
- VLAN

Examples To configure an IPv6 MSS size of 1452 bytes on PPP interface ppp0, use the commands:

```
awplus# configure terminal
awplus(config)# interface ppp0
awplus(config-if)# ipv6 tcp adjust-mss 1452
```

To configure an IPv6 MSS size of 1452 bytes on Ethernet interface eth1, use the commands:

```
awplus# configure terminal
awplus(config)# interface eth1
awplus(config-if)# ip tcp adjust-mss 1452
```

To restore the MSS size to the default size on PPP interface `ppp0`, use the commands:

```
awplus# configure terminal
awplus(config)# interface ppp0
awplus(config-if)# no ip tcp adjust-mss
```

Related Commands

mtu (PPP)

show interface

show interface (PPP)

show interface tunnel (GRE)

keepalive (PPP)

Overview Use this command to enable LCP (Link Control Protocol) Echo keepalive request messages and change LCP echo parameters on a given PPP interface in Interface Configuration mode.

Use the **no** variant of this command to disable LCP Echo keepalive request messages on a given PPP interface in Interface Configuration mode. Note that disabling the sending of LCP Echo keepalive request messages does not stop a device responding to LCP Echo requests.

Syntax

```
keepalive [[interval <interval>] [attempts
<attempt-limit>]]no keepalive
```

Parameter	Description
<interval>	Specify the interval in seconds in the range <1-600> seconds between LCP Echo keepalive request messages, for a PPP interface. Default: 10
<attempt-limit>	Specify the number of missing LCP Echo keepalive response messages, in the range <1-10> for a PPP interface, before the link is considered as being link down and link renegotiation starts to reestablish the link. Default: 3

Default The sending of LCP Echo keepalive messages on a PPP interface is disabled by default. If no optional **interval** is specified then the default interval duration is configured to 10 seconds. If no optional **attempts** are specified then the default attempt limit is configured to 3 attempts.

Mode Interface Configuration for a PPP interface

Example To enable the device to send LCP Echo keepalive messages on the PPP interface ppp0with the default 10 second interval when no interval is specified and the default 3 attempts when no attempt is specified, enter the below commands:

```
awplus# configure terminal
awplus(config)# interface ppp0
awplus(config-if)# keepalive
```

To enable the device to send LCP Echo keepalive messages on the PPP interface ppp0 with double the default values for a 20 second interval and 6 attempts, enter the below commands:

```
awplus# configure terminal
awplus(config)# interface ppp0
awplus(config-if)# keepalive interval 20 attempts 6
```

To disable the device from sending LCP Echo keepalive messages on the PPP interface `ppp0`, enter the below commands:

```
awplus# configure terminal
awplus(config)# interface ppp0
awplus(config-if)# no keepalive
```

Related Commands show running-config interface

mtu (PPP)

Overview Use this command to set the Maximum Transmission Unit (MTU) size for a PPP interface, where MTU is the maximum packet size that PPP interfaces can transmit.

Use the **no** variant of this command to remove a previously specified MTU size for a PPP interface, and restore the default MTU size (1492 bytes) for PPP interfaces.

Syntax

```
mtu <mtu-size>
no mtu
```

Parameter	Description
<mtu-size>	<68-1492> Specifies the Maximum Transmission Unit (MTU) size in bytes, where 1492 bytes is the default MTU size for a PPPoE interface and 1500 bytes for PPP via other lower layer interface types. This allows for the 8-byte PPPoE header that is added to make up the total of a 1582 byte packet that matches the default MTU size for the Ethernet link..

NOTE: *For PPPoE the minimum MTU value is 128.*

Default The default MTU size is 1492 bytes for PPPoE interfaces. The MTU should be greater than, or equal to, the MSS.

Mode Interface Configuration for PPP interfaces.

Usage If a router receives an IPv4 packet for another PPP interface with an MTU size smaller than the packet size, and if the packet has the ' **don't fragment**' bit set, then the switch will send an ICMP ' **destination unreachable**' (3) packet type and a ' **fragmentation needed and DF set**' (4) code back to the source.

See the ip tcp adjust-mss command to set the Maximum Segment Size (MSS) after first setting the MTU size.

Examples To configure an MTU size of 1492 bytes on PPP interface ppp0, use the commands:

```
awplus# configure terminal
awplus(config)# interface ppp0
awplus(config-if)# mtu 1492
```

To restore the MTU size to the default MTU size of 1492 bytes on PPP interface ppp0, use the commands

```
awplus# configure terminal
awplus(config)# interface ppp0
awplus(config-if)# no mtu
```

Related Commands ip tcp adjust-mss

show interface (PPP)

peer default ip address

Overview Use this command to set the default IP address assigned to the peer if required for a given PPP interface.

Use the optional **required** keyword with this command to specify that the peer must use this address for a given PPP interface, or drop the connection.

Use the **no** variant of this command to remove the previously specified peer default IP address for a given PPP interface.

Syntax

```
peer default ip address <default-ip-address> [required]
no peer default ip address
```

Parameter	Description
<default-ip-address>	Specify the IPv4 address to be assigned to the peer upon request.
`required`	Optionally specify the peer to acknowledge the default IP address, which requires the peer to use the address or drop the connection.

Default No default IP address is configured to be assigned to the peer.

Mode Interface Configuration for a PPP interface

Examples To configure the PPP interface `ppp0` to assign the IP address of `192.168.0.1` to its peer upon request, use the below commands:

```
awplus# configure terminal
awplus(config)# interface ppp0
awplus(config-if)# peer default ip address 192.168.0.1
```

To configure the PPP interface `ppp0` to have the default peer IP address of `192.168.0.1`, and be required to use it or drop the connection, use the below commands:

```
awplus# configure terminal
awplus(config)# interface ppp0
awplus(config-if)# peer default ip address 192.168.0.1
required
```

To remove the default peer IP address of `192.168.0.1` from the PPP interface `ppp0`, enter the below commands:

```
awplus# configure terminal
awplus(config)# interface ppp0
awplus(config-if)# no peer default ip address
```

To verify the required peer default IP address `192.168.0.1` is configured on PPP interface `ppp0`, use the following command:

```
awplus# show running-config interface ppp0
```

Output

Table 1: Example output from the **show running-config interface** ppp0 command

```
awplus# show running-config interface ppp0
!
interface ppp0
 peer default ip address 192.168.0.1 required
!
```

Related Commands

ip address negotiated

show running-config interface

peer neighbor-route

Overview Use this command in Interface Configuration mode for a PPP interface to re-enable the creation of peer neighbor routes after the default behavior has been disabled.

Use the **no** form of this command in Interface Configuration mode for a PPP interface to disable the default behavior of creating a neighbor route for the peer.

Syntax

```
peer neighbor-route
no peer neighbor-route
```

Default A 32-bit host route (with a /32 mask) is created to the peer address on a PPP interface after PPP IPCP negotiation finishes.

Usage Use the **no** form of this command if the default behavior creates issues within your network. Use the show ip route command to validate the route behavior after issuing this command.

Mode Interface Configuration for a PPP interface

Examples To re-enable the default behavior for the PPP interface `ppp1`, where a 32-bit host route (with a /32 mask) is created to the peer address on a PPP interface after PPP IPCP negotiation finishes, enter the commands:

```
awplus# configure terminal
awplus(config)# interface ppp1
awplus(config-if)# peer neighbor-route
```

To disable the default behavior for the PPP interface `ppp0`, to prevent a 32-bit host route being added to the IP router table, enter the commands:

```
awplus# configure terminal
awplus(config)# interface ppp0
awplus(config-if)# no peer neighbor-route
```

Related Commands show interface (PPP)

show ip route

Output Figure 19-5: Example validation output from the **show interface** and **show ip route** commands issued before and after the **no peer neighbor-route** command (see IPv4 address in **show interface** output and see connected routes **show ip route** output):

```
awplus#show interface ppp1
Interface ppp1
  Scope: both
  Link is UP, administrative state is UP
  Hardware is PPP
  IPv4 address 4.1.1.2/32 pointopoint 4.1.1.1
  index 16778241 metric 1 mtu 1460
  <UP,POINTOPOINT,RUNNING,NOARP,MULTICAST>
  VRF Binding: Not bound
  PPP is running over interface tunnel1
  LCP Opened IPCP Opened
  L2TP session ID is 59451
  SNMP link-status traps: Disabled
    input packets 5, bytes 66, dropped 0, multicast packets 0
    output packets 4, bytes 46, multicast packets 0 broadcast packets 0
  Time since last state change: 0 days 00:02:24
awplus#show ip route
Codes: C - connected, S - static, R - RIP, B - BGP
       O - OSPF, IA - OSPF inter area
       N1 - OSPF NSSA external type 1, N2 - OSPF NSSA external type 2
       E1 - OSPF external type 1, E2 - OSPF external type 2
       * - candidate default

C       4.1.1.1/32 is directly connected, ppp1
C       4.1.1.2/32 is directly connected, ppp1
C       192.168.10.0/24 is directly connected, vlan1
awplus#configure terminal
Enter configuration commands, one per line.  End with CNTL/Z.
awplus(config)#interface ppp1
awplus(config-if)#no peer neighbor-route
awplus(config-if)#exit
awplus(config)#exit
awplus#show interface ppp1
Interface ppp1
  Scope: both
  Link is UP, administrative state is UP
  Hardware is PPP
  IPv4 address 4.1.1.2/32
  index 16778241 metric 1 mtu 1460
  <UP,POINTOPOINT,RUNNING,NOARP,MULTICAST>
  VRF Binding: Not bound
  PPP is running over interface tunnel1
  LCP Opened IPCP Opened
  L2TP session ID is 6262
  SNMP link-status traps: Disabled
    input packets 5, bytes 66, dropped 0, multicast packets 0
    output packets 4, bytes 46, multicast packets 0 broadcast packets 0
  Time since last state change: 0 days 00:00:09
awplus#show ip route
Codes: C - connected, S - static, R - RIP, B - BGP
       O - OSPF, IA - OSPF inter area
       N1 - OSPF NSSA external type 1, N2 - OSPF NSSA external type 2
       E1 - OSPF external type 1, E2 - OSPF external type 2
       * - candidate default

C       4.1.1.2/32 is directly connected, ppp1
C       192.168.10.0/24 is directly connected, vlan1
```

ppp authentication

Overview Use this command in Interface Configuration mode for a PPP interface to configure PAP (Password Authentication Protocol), CHAP (Challenge Authentication Protocol), or EAP (Extensible Authentication Protocol).

Use the **no** form of this command in Interface Configuration mode for a PPP interface to disable all PAP, CHAP, and EAP authentication for a specified PPP interface.

Syntax

```
ppp authentication {eap|chap|pap}
no ppp authentication
```

Parameter	Description
eap	Specify this parameter to enable EAP on a PPP interface
chap	Specify this parameter to enable CHAP on a PPP interface.
pap	Specify this parameter to enable PAP on a PPP interface.

Default There is no PPP authentication protocol defined or configured to a PPP interface by default.

Mode Interface Configuration for a PPP interface

Examples To enable PPP PAP authentication on the PPP interface ppp0, enter the commands:

```
awplus# configure terminal
awplus(config)# interface ppp0
awplus(config-if)# ppp authentication pap
```

To enable PPP CHAP authentication on the PPP interface ppp0, enter the commands:

```
awplus# configure terminal
awplus(config)# interface ppp0
awplus(config-if)# ppp authentication chap
```

To enable PPP EAP authentication on the PPP interface ppp0, enter the commands:

```
awplus# configure terminal
awplus(config)# interface ppp0
awplus(config-if)# ppp authentication eap
```

To attempt PPP EAP authentication, then fall back to PPP CHAP authentication if the attempt to enable PPP EAP authentication fails on the PPP interface `ppp0`, enter the commands:

```
awplus# configure terminal
awplus(config)# interface ppp0
awplus(config-if)# ppp authentication eap chap
```

To attempt PPP CHAP authentication, then fall back to PPP PAP authentication if the attempt to enable PPP CHAP authentication fails on the PPP interface `ppp0`, enter the commands:

```
awplus# configure terminal
awplus(config)# interface ppp0
awplus(config-if)# ppp authentication chap pap
```

To disable all PPP authentication on the PPP interface `ppp0`, enter the commands:

```
awplus# configure terminal
awplus(config)# interface ppp0
awplus(config-if)# no ppp authentication
```

Related Commands

ppp authentication refuse

ppp hostname

ppp password

ppp username

ppp authentication refuse

Overview Use this command in Interface Configuration mode for a PPP interface to refuse EAP, CHAP (Challenge Handshake Authentication Protocol) or PAP (Password Authentication Protocol) authentication from peers requesting it.

Use the **no** form of this command in Interface Configuration mode for a PPP interface to allow authentication from peers requesting it.

Syntax

```
ppp authentication refuse {eap|chap|pap}
no ppp authentication refuse
```

Parameter	Description
`eap`	Use this parameter to specify the router will refuse LCP configuration requests containing the authentication protocol option with EAP received on this PPP interface.
`chap`	Use this parameter to specify the router will refuse LCP configuration requests containing the authentication protocol option with CHAP received on this PPP interface.
`pap`	Use this parameter to specify the router will refuse LCP configuration requests containing the authentication protocol option with PAP on this PPP interface.

Mode Interface Configuration for a PPP interface

Usage This command specifies that EAP, CHAP or PAP authentication is disabled, so all requests by the peer for the user to authenticate using EAP, CHAP or PAP are refused.

Examples To refuse the use of PAP authentication if a peer requests PAP authentication, enter the commands:

```
awplus# configure terminal
awplus(config)# interface ppp0
awplus(config-if)# ppp authentication refuse pap
```

To refuse the use of CHAP authentication if a peer requests CHAP authentication, enter the commands:

```
awplus# configure terminal
awplus(config)# interface ppp0
awplus(config-if)# ppp authentication refuse chap
```

To refuse the use of EAP authentication if a peer requests EAP authentication, enter the commands:

```
awplus# configure terminal
awplus(config)# interface ppp0
awplus(config-if)# ppp authentication refuse eap
```

To allow the use of EAP, CHAP or PAP authentication if a peer requests EAP, CHAP or PAP authentication, enter the commands:

```
awplus# configure terminal
awplus(config)# interface ppp0
awplus(config-if)# no ppp authentication refuse
```

Related Commands ppp authentication

ppp hostname

Overview Use this command in Interface Configuration mode for a PPP interface to configure a unique identifier for that PPP authenticator. This is used by the authenticator to fill the Name field in a CHAP challenge packet, or is used to fill the Server Name field in an EAP SRP-SHA1 (Subtype 1 Request) packet. The hostname sent with PPP packet exchanges is normally the hostname of the router, as configured with the hostname command.

Use the **no** form of this command in Interface Configuration mode for a PPP interface to disable a configured alternate hostname and revert to using the hostname, as configured with the hostname command.

See the Usage section below for information about when you may want to specify another hostname, instead of the system hostname configured from the hostname command, using this command.

Syntax

```
ppp hostname <hostname>
no ppp hostname <hostname>
```

Parameter	Description
<hostname>	Specify this parameter to use an alternate hostname for PPP EAP and CHAP authentication instead of the hostname specified by the hostname command. The name can contain up to 255 characters. The name can contain any printable ASCII characters (ASCII 32-126). If the name contains the special characters backslash, double-quote or space, those characters should be escaped with a backslash.

Default The default PPP hostname is the system hostname as specified with the hostname command.

Mode Interface Configuration for a PPP interface

Usage This command allows the PPP username that is sent to be independent of the router hostname for a specific PPP interface.

Examples To enable the use of the alternate hostname `remote_router` for PPP authentication, enter the commands:

```
awplus# configure terminal
awplus(config)# interface ppp0
awplus(config-if)# ppp hostname remote_router
```

To disable the use of the alternate hostname `remote_router` for PPP authentication, enter the commands:

```
awplus# configure terminal
awplus(config)# interface ppp0
awplus(config-if)# no ppp hostname remote_router
```

Related Commands

hostname

ppp authentication

ppp ipcp dns

Overview Use this command to configure the primary and secondary DNS (Domain Name System) IP addresses for IPCP (Internet Protocol Control Protocol) on a given PPP interface.

Use the **no** variant of this command to remove the primary and secondary DNS IP addresses for IPCP on a given PPP interface, and remove any optional parameters configured for DNS.

Syntax

```
ppp ipcp dns [<primary> [<secondary>]][required|reject|request]
no ppp ipcp dns
```

Parameter	Description
<primary>	Specify the primary DNS address for a given PPP interface to the peer.
<secondary>	Specify the secondary DNS address for a given PPP interface to the peer.
`required`	Request DNS addresses from the peer, and close the link if none is given.
`reject`	Reject negotiations with the peer (default).
`request`	Request DNS addresses from the peer.

Default By default no IPCP DNS server request is sent to the peer.

Mode Interface Configuration

Usage Use the optional parameters to configure PPP IPCP DNS options for accepting, rejecting or requesting DNS addresses from the peer. Use the optional primary and secondary or primary only DNS server address placeholders to specify DNS server addresses to the peer.

The no variant of this command also stops IPCP DNS request messages being sent to the peer.

Examples To configure the PPP interface `ppp0` to require a DNS IP address from the peer, and close the link if a DNS IP address is not given, enter the below commands:

```
awplus# configure terminal
awplus(config)# interface ppp0
awplus(config-if)# ppp ipcp dns required
```

To configure the PPP interface ppp0 to require a DNS IP address from the peer, enter the below commands:

```
awplus# configure terminal
awplus(config)# interface ppp0
awplus(config-if)# ppp ipcp dns request
```

To configure the PPP interface ppp0 to reject a DNS IP address from the peer, enter the below commands:

```
awplus# configure terminal
awplus(config)# interface ppp0
awplus(config-if)# ppp ipcp dns reject
```

To configure the PPP interface ppp0 to supply primary and secondary DNS server addresses to the peer, enter the below commands:

```
awplus# configure terminal
awplus(config)# interface ppp0
awplus(config-if)# ppp ipcp dns 10.1.1.2 10.1.1.3
```

To configure the PPP interface ppp0 to supply a primary but not a secondary DNS server address to the peer, enter the below commands:

```
awplus# configure terminal
awplus(config)# interface ppp0
awplus(config-if)# ppp ipcp dns 10.1.1.2
```

Related Commands

ip address negotiated

peer default ip address

peer neighbor-route

show running-config interface

ppp ipcp dns suffix-list

Overview Use this command to configure a suffix-list to be associated with DNS name-servers learned over the PPP connection.

Use the **no** variant of this command to remove the suffix-list.

Syntax

```
ppp ipcp dns suffix-list <domain-list-name>
no ppp ipcp dns suffix-list
```

Parameter	Description
<domain-list-name>	The name of the DNS domain-list

Mode Interface Configuration

Usage A PPP connection can be configured to learn DNS servers from the remote peer by using the command ppp ipcp dns command.

This command allows a user to associate a domain-list to be used to match against the suffixes of incoming DNS requests. For example, a customer branch office may have a router that is used to give remote-access to their head office, over which they learn the IP address of the head office's DNS server. A domain list can be created that contains a suffix used for services internal to that company, for example, "example.lc". This domain-list is associated as a suffix-list to the PPP connection. So when the PPP connection is completed with the head office, users at the branch office that browse to "intranet.example.lc" will have the DNS request forwarded to the DNS server learned over the PPP connection. Without having the suffix-list configured, the DNS request for "intranet.example.lc" would instead be sent to the primary DNS server, which is likely to be the branch office's ISP, and they will simply respond with a negative reply, because .example.lc is not a globally routable domain.

Examples At a branch office, to direct DNS lookups for domains with suffixes of "engineering.acme" or "intranet.acme" to an internal corporate name-server run at head-office that was learned over a PPP connection, use the commands:

```
awplus# configure terminal
awplus(config)# ip dns forwarding domain-list corporatedomains
host(config-domain-list)# description Our internal network
domains; do not send DNS requests to internet
host(config-domain-list)# domain engineering.acme
host(config-domain-list)# domain intranet.acme
awplus(config)# interface ppp0
awplus(config-if)# ppp ipcp dns required
awplus(config-if)# ppp ipcp dns suffix-list corporatedomains
```

Related Commands

ip dns forwarding domain-list

ppp ipcp dns

ppp ipcp ip-override

Overview Use this command to override the IP address negotiated via IPCP with peer and use the statically configured address on a given PPP interface.

Use the **no** variant of this command to use any address negotiated with the peer via IPCP on a given PPP interface.

Syntax

```
ppp ipcp ip-override
no ppp ipcp ip-override
```

Default By default the address is negotiated with the peer via IPCP.

Mode Interface Configuration

Examples To override the IP address negotiated with the peer via IPCP and use statically configured address on interface ppp0, use the commands below:

```
awplus# configure terminal
awplus(config)# interface ppp0
awplus(config-if)# ip address 192.168.1.100/24
awplus(config-if)# ppp ipcp ip-override
```

Related Commands show running-config interface

ppp password

Overview Use this command in Interface Configuration mode for a PPP interface to configure a PPP secret password to be used in response to a challenge from an unknown remote peer.

Use the **no** form of this command in Interface Configuration mode for a PPP interface to disable a configured PPP secret password.

Syntax

```
ppp password <password>
no ppp password
```

Parameter	Description
<password>	Specify this parameter to configure a PPP secret password to be used in response to an unknown remote peer. You can use any printable characters, including spaces. A password can contain up to 255 printable characters.

Default There is no PPP password defined or configured to a PPP interface by default.

Mode Interface Configuration for a PPP interface

Examples To enable the use of the PPP secret password `bobs_secret` for PPP authentication, enter the commands:

```
awplus# configure terminal
awplus(config)# interface ppp0
awplus(config-if)# ppp password bobs_secret
```

To disable the use of the PPP secret password `bobs_secret` for PPP authentication, enter the commands:

```
awplus# configure terminal
awplus(config)# interface ppp0
awplus(config-if)# no ppp password
```

Related Commands ppp authentication

ppp username

ppp service-name (PPPoE)

Overview This command configures the PPPoE service name used to select a service from an access concentrator. This can only be applied when the PPP interface has been configured over an underlying eth interface.

Use the **no** variant of this command to set the service name for the connection back to the default (unset).

Syntax

```
ppp service-name <service-name>
no ppp service-name
```

Parameter	Description
<service-name>	Specifies the PPPoE service name to select from an access concentrator. The service-name is 1 to 18 characters long, is case-sensitive, and for a PPPoE client is usually supplied by the ISP. The name can contain any printable ASCII characters (ASCII 32-126). If the name contains the special characters backslash, double-quote or space, those characters should be escaped with a backslash. The default is no service name.

Default The default option is not to specify a service name. This results in a connection to the default service specified by the access concentrator.

Mode Interface Configuration for a PPP interface

Usage You can only apply a single service name to each PPPoE interface.

Examples To connect to a service called “Internet”, use the command:

```
awplus(config)# interface ppp0
awplus(config-if)# ppp service-name Internet
```

Related Commands

encapsulation ppp

show interface (PPP)

ppp timeout idle

Overview Use this command to specify an idle time when a PPP connection is disconnected.

Use the **no** variant of this command to reset the idle time to the default of 60 seconds.

Syntax

```
ppp timeout idle <0-99999>
no ppp timeout idle
```

Parameter	Description
<0-99999>	The time in seconds before the idle timeout disconnects. If this is not specified the default value of 60 seconds is used.

Default PPP timeout idle is not set and the PPP Dial on Demand feature is disabled. If no idle time is set, the default value of 60 seconds is used.

Mode Interface Configuration

Usage This command allows an idle timer to disconnect a PPP connection after a specified time. The timer is reset upon either ingress or regress user traffic. Non-user traffic such as Link Control Protocol (LCP) keepalives and Network Control Protocol (NCP) negotiation packets do not reset the idle timer.

Examples To set the idle time to 30 seconds, enter the below commands:

```
awplus# configure terminal
awplus(config)# interface ppp0
awplus(config-if)# ppp timeout idle
30
```

To disable the use of the timer and disable the PPP Dial on Demand feature, enter the below commands:

```
awplus# configure terminal
awplus(config)# interface ppp0
awplus(config-if)# no ppp timeout
idle 30
```

Validation Commands show running-config interface

ppp username

Overview This command creates or modifies a username for a PPP user on a configured PPP interface.

Syntax

```
ppp username <username>
no ppp username
```

Parameter	Description
<username>	Specify a login name for the user. The name can contain up to 255 characters. The name can contain any printable ASCII characters (ASCII 32-126). If the name contains the special characters backslash, double-quote or space, those characters should be escaped with a backslash.

Default There is no default PPP username defined or configured to a PPP interface.

Mode Interface Configuration for a PPP interface.

Examples To create the PPP username `bob`, for the PPP interface ppp0, use the commands:

```
awplus# configure terminal
awplus(config)# interface ppp0
awplus(config-if)# ppp username bob
```

To remove the PPP username `bob`, for the PPP interface ppp0, use the commands:

```
awplus# configure terminal
awplus(config)# interface ppp0
awplus(config-if)# no ppp username
```

Related Commands

ppp authentication

ppp password

show debugging ppp

Overview Use this command to display PPP debug settings for optionally specified PPP interfaces. If no PPP interfaces are specified then PPP debug settings are shown for all available PPP interfaces.

Syntax

```
show debugging ppp [interface <0-255>]
```

Parameter	Description
<0-255>	Specify a PPP interface or a range of PPP interfaces in the range ppp<0-255>. Use a hyphen between PPP interfaces to include all PPP interfaces in a given range, or use commas between PPP interfaces to specify non-contiguous PPP interfaces.

Mode Privileged Exec

Examples The following example shows how to display PPP debug information for PPP interface ppp0:

```
awplus# show debugging ppp interface ppp0
```

The following example shows how to display PPP debug information for PPP interface ppp0 through ppp2:

```
awplus# show debugging ppp interface ppp0-ppp2
```

The following example shows how to display PPP debug information for PPP interface ppp0 and ppp2:

```
awplus# show debugging ppp interface ppp0,ppp2
```

The following example shows how to display PPP debug information for all available PPP interfaces:

```
awplus# show debugging ppp
```

Figure 19-6: Example output from the **show debugging ppp** command

```
awplus# show debugging ppp
PPP debugging status:
  PPP debug on interface ppp0: enabled
  PPP debug on interface ppp1: disabled
```

Related Commands

debug ppp

no debug all

undebug all

show interface (PPP)

show interface (PPP)

Overview Use this command to display configuration and status information for a configured PPP (Point-to-Point) interface.

Syntax

```
show interface ppp<ppp_index>
```

Parameter	Description
<ppp_index>	Display configuration and status information for the specified and configured PPP interface (0 to 255).

Mode User Exec and Privileged Exec

Usage See the show interface brief command for brief interface, configuration and status information.

Note the negotiated options, including those for DNS addresses, are shown in console output:

- `Local DNS addresses` as displayed in console output are provided from the peer.
- `Peer DNS addresses` as displayed in console output are provided to the peer.
- Only `Peer DNS addresses` or `Local DNS addresses` are shown, but not both.
- `Echo Request Timer` value as displayed in console output is the local setting.

Example The following example shows how to display the configuration and status information for a configured PPP interface named `ppp0`.

```
awplus# show interface ppp0
```

Figure 19-7: Example output from the **show interface** command for a PPPoE interface

```
awplus#show interface ppp0

Interface ppp0
  Scope: both
  Link is UP, administrative state is UP
  Hardware is PPP
  IPv4 address 10.1.0.2/32
  IPv6 address fe80::200:cdff:fe28:8a1/10
  index 16778440 metric 1
  <UP,POINTOPOINT,RUNNING,NOARP,MULTICAST>
  VRF Binding: Not bound
  PPP is running over interface eth0
  PPPoE is using the default service
  SNMP link-status traps: Disabled
   input packets 12, bytes 458, dropped 0, multicast packets 0
   output packets 6, bytes 122, multicast packets 0 broadcast
packets 0
  Time since last state change: 0 days 00:01:57
```

Figure 19-8: Example output from the **show interface ppp1** command showing negotiated DNS addresses, where the peer provided the DNS information (see the **Local DNS addresses** field output below):

```
awplus#sh interface ppp1
Interface ppp1
  Scope: both
  Link is UP, administrative state is UP
  Hardware is PPP
  IPv4 address 192.168.1.1/30 pointopoint 192.168.1.2
  IPv6 address fe80::200:cdff:fe28:89f/10
  index 16778241 metric 1 mtu 1460
  <UP,POINTOPOINT,RUNNING,NOARP,MULTICAST>
  VRF Binding: Not bound
  PPP is running over interface tunnel1
  LCP Opened IPCP Opened IPV6CP Opened
  MRU(bytes): Local config 1460, Local negotiated 1460, Peer
negotiated 1460
  Magic number: Local config ON, Local negotiated ON, Peer
negotiated ON
  Authentication: Local config None, Local neg None, Peer neg None
  Echo Request Timer (seconds): 10
  IPv4 addresses: Local config 192.168.1.1, Peer neg 192.168.1.2
  IPv6 interface ID: Local eecd:6dff:fe3a:0d18, Peer neg
eecd:6dff:fe3a:0d18
  Local DNS addresses: 192.168.60.1, 192.168.60.2
  L2TP session ID is 15288
  SNMP link-status traps: Disabled
    input packets 5, bytes 96, dropped 0, multicast packets 0
    output packets 5, bytes 96, multicast packets 0 broadcast
packets 0
  Time since last state change: 0 days 00:06:29
awplus#
```

Figure 19-9: Example output from the **show interface ppp1** command showing negotiated DNS addresses, where the peer was provided with DNS information (see the **Peer DNS addresses** field output below):

```
awplus#sh interface ppp1
Interface ppp1
  Scope: both
  Link is UP, administrative state is UP
  Hardware is PPP
  IPv4 address 192.168.1.1/30 pointopoint 192.168.1.2
  IPv6 address fe80::200:cdff:fe28:89f/10
  index 16778241 metric 1 mtu 1460
  <UP,POINTOPOINT,RUNNING,NOARP,MULTICAST>
  VRF Binding: Not bound
  PPP is running over interface tunnel1
  LCP Opened IPCP Opened IPV6CP Opened
  MRU(bytes): Local config 1460, Local negotiated 1460, Peer
negotiated 1460
  Magic number: Local config ON, Local negotiated ON, Peer
negotiated ON
  Authentication: Local config None, Local neg None, Peer neg None
  Echo Request Timer (seconds): 10
  IPv4 addresses: Local config 192.168.1.1, Peer neg 192.168.1.2
  IPv6 interface ID: Local eecd:6dff:fe3a:0d18, Peer neg
eecd:6dff:fe3a:0d18
  Peer DNS addresses: 1.1.1.1, 2.2.2.2
  L2TP session ID is 15288
  SNMP link-status traps: Disabled
    input packets 5, bytes 96, dropped 0, multicast packets 0
    output packets 5, bytes 96, multicast packets 0 broadcast
packets 0
  Time since last state change: 0 days 00:06:29
awplus#
```

Related Commands

encapsulation ppp

ppp service-name (PPPoE)

show interface

show interface brief

undebug ppp

Overview Use this command to disable PPP protocol debugging on the specified PPP interface or interfaces. If no PPP interface is specified then PPP debugging for all PPP interfaces is disabled.

This command has the same functionality as the **no** variant of the debug ppp command.

Syntax

```
undebug ppp [interface <ppp-interface-list>]
```

Parameter	Description
<ppp-interface-list>	Specify a PPP interface or a range of PPP interfaces in the range ppp<0-255>. Use a hyphen between PPP interfaces to include all PPP interfaces in a given range, or use commas between PPP interfaces to specify non-contiguous PPP interfaces.

Default No diagnostic messages are enabled for PPP debugging. PPP debugging is disabled by default.

Mode Privileged Exec

Usage Note that this command is an alias of the negated form of the debug ppp command.

Examples To disable PPP debugging for all PPP interfaces, enter the below command:

```
awplus# undebug ppp
```

To disable PPP debugging for PPP interfaces ppp0, enter the below command:

```
awplus# undebug ppp interface ppp0
```

To disable PPP debugging for PPP interfaces ppp0 through ppp2, enter the below command:

```
awplus# undebug ppp interface ppp0-ppp2
```

To disable PPP debugging for PPP interfaces ppp0 and ppp2, enter the below command:

```
awplus# undebug ppp interface ppp0,ppp2
```

Related Commands

debug ppp

no debug all

show debugging ppp

undebug all

20 PPP over Ethernet (PPPoE) Commands

Introduction

Overview

This chapter provides an alphabetical reference of commands used to configure a PPP over Ethernet (PPPoE) Access Concentrator (AC).

For more information, see the L2TPv2 Tunneling of PPP Feature Overview and Configuration Guide.

Command List

- "clear pppoe-ac statistics" on page 620
- "debug pppoe-ac" on page 621
- "destination l2tp" on page 622
- "l2tp peer-address dns-lookup" on page 623
- "l2tp peer-address radius-lookup group" on page 625
- "l2tp peer-address static" on page 626
- "l2tp profile" on page 628
- "ppp-auth-protocol" on page 630
- "pppoe-ac" on page 631
- "pppoe-ac-service" on page 632
- "proxy-auth" on page 633
- "service-name" on page 634
- "show debugging pppoe ac" on page 636
- "show pppoe-ac config-check" on page 637
- "show pppoe-ac connections" on page 639
- "show pppoe-ac statistics" on page 641
- "show running-config pppoe-ac" on page 644

clear pppoe-ac statistics

Overview Use this command to zero all the PPPoE Access Concentrator statistics counters, and restart the counters incrementing from zero.

To see the affected counter values, use the command show pppoe-ac statistics.

Syntax
```
clear pppoe-ac statistics
```

Default n/a

Mode Privileged Exec

Example To set all the PPPoE Access Concentrator statistics counters to zero, use the command:

```
awplus# clear pppoe-ac statistics
```

Related Commands show pppoe-ac statistics

debug pppoe-ac

Overview Use this command to enable debugging of the PPPoE Access Concentrator.

Use the **no** variant of this command to disable debugging of the PPPoE Access Concentrator.

Syntax

```
debug pppoe-ac
no debug pppoe-ac
```

Parameter	Description
<varname>	Description of varname

Default PPPoE Access Concentrator debugging is disabled by default.

Mode Privileged Exec

Example To enable PPPoE AC debugging, use the commands:

```
awplus# debug pppoe-ac
awplus# terminal monitor
% Warning: Console logging enabled
```

Related Commands debug l2tp

show debugging pppoe ac

destination l2tp

Overview Use this command to set the destination to forward all PPPoE packets to the peer over L2TP.

Use the **no** variant of this command to unset the destination for PPPoE packets.

Syntax

```
destination l2tp
no destination
```

Default This command is not configured by default.

Mode PPPoE Access Concentrator Configuration

Example To sets the destination to forward all PPPoE packets for the service 'ISP-service' to the peer over L2TP, use the commands:

```
awplus# configure terminal
awplus(config)# pppoe-ac ISP-service
awplus(config-pppoe-ac)# destination l2tp
```

To unset the destination for PPPoE packets for the service 'ISP-service', use the commands:

```
awplus# configure terminal
awplus(config)# pppoe-ac ISP-service
awplus(config-pppoe-ac)# no destination
```

Related Commands

l2tp peer-address dns-lookup

l2tp peer-address radius-lookup group

l2tp peer-address static

l2tp profile

pppoe-ac

ppp-auth-protocol

service-name

show running-config pppoe-ac

l2tp peer-address dns-lookup

Overview Use this command to set the LNS address to use via a DNS lookup from the username email domain for this PPPoE Access Concentrator service.

Use the **no** variant of this command to remove the DNS lookup setting for this PPPoE AC service.

Syntax

```
l2tp peer-address dns-lookup [prefix <prefix>|]
no l2tp peer-address
```

Parameter	Description
<prefix>	A string to prepend to the domain name portion of the username.

Default This command is not set by default.

Mode PPPoE Access Concentrator Configuration

Example To set the LNS address to use via a DNS lookup for the PPPoE AC service 'ISP-service', use the commands:

```
awplus# configure terminal
awplus(config)# pppoe-ac ISP-service
awplus(config-pppoe-ac)# l2tp peer-address dns-lookup
```

To set the LNS address to use via a DNS lookup and prepend "lns" to the domain name portion of the username, use the commands:

```
awplus# configure terminal
awplus(config)# pppoe-ac ISP-service
awplus(config-pppoe-ac)# l2tp peer-address dns-lookup prefix
lns
```

To remove the DNS lookup setting for the PPPoE AC service 'ISP-service', use the commands:

```
awplus# configure terminal
awplus(config)# pppoe-ac ISP-service
awplus(config-pppoe-ac)# no l2tp peer-address
```

Related Commands

destination l2tp

l2tp peer-address radius-lookup group

l2tp peer-address static

l2tp profile

pppoe-ac

ppp-auth-protocol

service-name

show running-config pppoe-ac

l2tp peer-address radius-lookup group

Overview Use this command to set this PPPoE Access Concentrator (AC) service to get the LNS address by a RADIUS lookup.

Use the **no** variant of this command to remove the L2TP peer address setting.

Syntax

```
l2tp peer-address radius-lookup group <radius-group-name>
no l2tp peer-address
```

Parameter	Description
<radius-group-name>	The name of the RADIUS group to lookup.

Default No L2TP peer address is set by default.

Mode PPPoE Access Concentrator Configuration

Example To find peer address via RADIUS lookup from Radius server group called "GROUP1", use the commands:

```
awplus# configure terminal
awplus(config)# pppoe-ac ISP-service
awplus(config-pppoe-ac)# l2tp peer-address radius-lookup group
GROUP1
```

To remove the RADIUS lookup setting for the PPPoE AC service 'ISP-service', use the commands:

```
awplus# configure terminal
awplus(config)# pppoe-ac ISP-service
awplus(config-pppoe-ac)# no l2tp peer-address
```

Related Commands

aaa group server

destination l2tp

l2tp peer-address dns-lookup

l2tp peer-address static

l2tp profile

pppoe-ac

ppp-auth-protocol

service-name

show running-config pppoe-ac

l2tp peer-address static

Overview Use this command to set the IP address or fully qualified domain name of the L2TP peer (LNS) to which the L2TP tunnel should be established for this PPPoE Access Concentrator route.

Use the **no** variant of this command to remove the configured L2TP peer (LNS) address.

Syntax

```
l2tp peer-address static
{<l2tp-peer-ip-address>|<l2tp-peer-domain-name>}
no l2tp peer-address
```

Parameter	Description
<l2tp-peer-ip-address>	The IPv4 address of the L2TP peer (LNS) for this PPPoE AC route, in dotted-decimal format.
<l2tp-peer-domain-name>	The fully-qualified domain name of the L2TP peer (LNS) for this PPPoE AC route.

Default No L2TP peer address is configured by default.

Mode PPPoe Access Concentrator Configuration

Example To configure L2TP to tunnel all users to the LNS located at IP address 192.168.11.2, use the commands:

```
awplus# configure terminal
awplus(config)# pppoe-ac ISP-service
awplus(cinfig-pppoe-ac)# l2tp peer-address static 192.168.11.2
```

To configure L2TP to tunnel all users to the LNS located at domain foo.mydomain.org, use the commands:

```
awplus# configure terminal
awplus(config)# pppoe-ac ISP-service
awplus(config-pppoe-ac)# l2tp peer-address static
foo.mydomain.org
```

To remove the configured peer (LNS) address, use the commands:

```
awplus# configure terminal
awplus(config)# pppoe-ac ISP-service
awplus(cinfig-pppoe-ac)# no l2tp peer-address
```

Related Commands

destination l2tp

l2tp peer-address dns-lookup

l2tp peer-address radius-lookup group

l2tp profile

ppp-auth-protocol

service-name

show running-config pppoe-ac

l2tp profile

Overview Use this command to set the profile to use for L2TP traffic for this PPPoE Access Concentrator (AC).

Use the **no** variant of this command to remove L2TP profile setting from this PPPoE AC.

Syntax

```
l2tp profile <l2tp-profile-name>
no l2tp profile <l2tp-profile-name>
```

Parameter	Description
<l2tp-profile-name>	The name of the L2TP profile that the PPPoE AC is to use. to use.

Default This command is not configured by default.

Mode PPPoE Access Concentrator Configuration

Usage The L2TP profile name used in this command is created by the **l2tp-profile** command.

Example To allow AC service "ISP-service" to use the L2TP profile called "PUBLIC", use the commands:

```
awplus# configure terminal
awplus(config)# pppoe-ac ISP-service
awplus(config-pppoe-ac)# l2tp profile PUBLIC
```

To unset the L2TP profile for the AC service "ISP-service", use the commands:

```
awplus# configure terminal
awplus(config)# pppoe-ac ISP-service
awplus(config-pppoe-ac)# no l2tp profile PUBLIC
```

Related Commands

destination l2tp

l2tp-profile

l2tp peer-address dns-lookup

l2tp peer-address radius-lookup group

l2tp peer-address static

l2tp-profile

pppoe-ac

ppp-auth-protocol

service-name

show running-config pppoe-ac

ppp-auth-protocol

Overview Use this command to set the authentication protocol to be used for this PPPoE Access Concentrator (AC) service.

Use the **no** variant of this command to reset the authentication protocol to the default.

Syntax

```
ppp-auth-protocol {chap|pap|eap}
no ppp-auth-protocol
```

Parameter	Description
chap	Set the PPP authentication protocol to Challenge Handshake Authentication Protocol (default).
pap	Set the PPP authentication protocol to Password Authentication Protocol.
eap	Set the PPP authentication protocol to Extensible Authentication Protocol.

Default Default PPP authentication protocol is CHAP.

Mode PPPoE Access Concentrator Configuration

Example To set PPP authentication for the PPPoE AC service 'ISP-service' to use PAP, use the commands:

```
awplus# configure terminal
awplus(config)# pppoe-ac ISP-service
awplus(config-pppoe-ac)# ppp-auth-protocol pap
```

To set PPP authentication to use the default (CHAP), use the commands:

```
awplus# configure terminal
awplus(config)# pppoe-ac ISP-service
awplus(config-pppoe-ac)# no ppp-auth-protocol
```

Related Commands

destination l2tp

l2tp peer-address dns-lookup

l2tp peer-address radius-lookup group

l2tp peer-address static

l2tp profile

pppoe-ac

service-name

show running-config pppoe-ac

pppoe-ac

Overview Use this command to create a PPPoE Access Concentrator (AC) and put the device into PPPoE Access Concentrator Configuration mode, in which subsequent commands can be entered.

Use the **no** variant of this command to remove the PPPoE AC and all its configuration.

Syntax

```
pppoe-ac <label>
no pppoe-ac <label>
```

Parameter	Description
<label>	A unique label for the PPPoE AC service.

Default No PPPoE AC services are configured by default.

Mode Global Configuration

Example To configure a PPPoE AC called "ISP-service", use the commands:

```
awplus# configure terminal
awplus(config)# pppoe-ac ISP-service
awplus(config-pppoe-ac)#
```

To remove a PPPoE AC called "ISP-service" and its configuration, use the commands:

```
awplus# configure terminal
awplus(config)# no pppoe-ac ISP-service
```

Related Commands

destination l2tp

l2tp peer-address dns-lookup

l2tp peer-address radius-lookup group

l2tp peer-address static

l2tp profile

pppoe-ac

ppp-auth-protocol

pppoe-ac-service

service-name

show running-config pppoe-ac

pppoe-ac-service

Overview Use this command to attach the specified PPPoE Access Concentrator (AC) service to the interface. An AC service can be offered on several interfaces. Up to six PPPoE AC services can be set for one interface. Only ETH and VLAN interfaces accept this command.

Use the **no** variant of this command to remove the AC service from the interface.

Syntax

```
pppoe-ac-service <label>
no pppoe-ac-service <label>
```

Parameter	Description
<label>	The name (label) of the PPPoE AC service to be attached to the interface.

Default No PPPoE AC service is attached to an interface by default.

Mode Interface Configuration

Usage The label of the PPPoE AC service specified in this command is created by the **pppoe-ac** command.

Example To provide a PPPoE AC service labeled 'ISP-service' for client requests received on interface eth1, use the commands:

```
awplus# configure terminal
awplus(config)# interface eth1
awplus(config-if)# pppoe-ac-service ISP-service
```

To remove the PPPoE AC service 'isp1' from interface eth1, use the commands:

```
awplus# configure terminal
awplus(config)# interface eth1
awplus(config-if)# no pppoe-ac-service isp1
```

Related Commands pppoe-ac

proxy-auth

Overview Use this command to enable the proxy authentication to allow PPP authentication data to be collected and sent to an L2TP peer in additional L2TP AVPs when the L2TP session is established.

Use the **no** variant of this command to disable the proxy authentication.

Syntax

```
proxy-auth
no proxy-auth
```

Default Proxy authentication is enabled by default.

Mode PPPoE Access Concentrator Configuration

Example To enable proxy authentication for the PPPoE AC service "ISP-service", use the commands:

```
awplus# configure terminal
awplus(config)# pppoe-ac ISP-service
awplus(config-pppoe-ac)# proxy-auth
```

Disable proxy authentication for PPPoE AC service "ISP-service:

```
awplus# configure terminal
awplus(config)# pppoe-ac ISP-service
awplus(config-pppoe-ac)# no proxy-auth
```

Related Commands

destination l2tp

l2tp peer-address dns-lookup

l2tp peer-address radius-lookup group

ppp-auth-protocol

pppoe-ac-service

service-name

show running-config pppoe-ac

service-name

Overview Use this command to configure the PPPoE service name offered by the Access Concentrator (AC).

Use the **no** variant of this command to remove the service offered by the AC.

Syntax

```
service-name {any|<service-name> [advertised]}
no service-name {any|<service-name>}
```

Parameter	Description
<service-name>	The name of the service to be offered.
any	The service should be provided to any client requesting it, regardless of the service name they request.
advertised	Whether the service is advertised to other clients.

Default No PPPoE service is configured by default.

Mode PPPoE Access Concentrator Configuration

Example To set the PPPoE AC labelled 'ISP-service' to provide service to any client requesting it, regardless of the service name they request, use the commands:

```
awplus# configure terminal
awplus(config)# pppoe-ac ISP-service
awplus(config-pppoe-ac# service-name any
```

To offer a private (unadvertised) PPPoE service "internet" and an advertised PPPoE service "remote-office" to a client, use the commands:

```
awplus# configure terminal
awplus(config)# pppoe-ac ISP-service
awplus(config-pppoe-ac)# service-name internet
awplus(config-pppoe-ac)# service-name remote-office advertised
```

To remove the non-matching (any) PPPoE service so that it is no longer offered to a client, use the commands:

```
awplus# configure terminal
awplus(config)# pppoe-ac ISP-service
awplus(config-pppoe-ac)# no service-name any
```

To remove the private PPPoE service "internet" and advertised service "remote-office", so they are no longer offered to a client, use the commands:

```
awplus# configure terminal
awplus(config)# pppoe-ac ISP-service
awplus(config-pppoe-ac)# no service-name internet
awplus(config-pppoe-ac)# no service-name remote-office
```

Related Commands

destination l2tp

l2tp peer-address dns-lookup

l2tp peer-address radius-lookup group

l2tp peer-address static

l2tp profile

pppoe-ac

ppp-auth-protocol

show running-config pppoe-ac

show debugging pppoe ac

Overview Use this command to display the status of the PPPoE AC debugging.

Syntax

```
show debugging pppoe ac
```

Mode Privileged Exec

Usage Enable PPPoE AC debugging with the **debug pppoe-ac** command.

Example To display the status of PPPoE AC debugging, use the command:

```
awplus# show debugging pppoe ac
```

Output Figure 20-1: Example output from **show debugging pppoe ac**

```
awplus#show debugging pppoe ac
PPPoE-AC Debugging is on
```

Related Commands debug pppoe-ac

show pppoe-ac config-check

Overview Use this command to display information about the validity of the configurations for PPPoE AC routes.

Syntax

```
show pppoe-ac [<label>] config-check
```

Parameter	Description
<label>	The label for the PPPoE AC service.

Mode Privileged Exec

Example To display the validity of the configurations for all PPPoE AC services, use the command:

```
awplus# show pppoe-ac config-check
```

To display the validity of the configurations for the PPPoE AC labelled "ac1" only, use the command:

```
awplus# show pppoe-ac ac1 config-check
```

Output Figure 20-2: Example output from **show pppoe-ac config-check**

```
awplus#sh pppoe-ac config-check

PPPoE Access Concentrator ac:
  Incomplete Configuration
  Required: add pppoe-ac-service to one or more interfaces
  Required: destination
  Required: service-name
  Required: l2tp peer-address
  Required: l2tp profile

PPPoE Access Concentrator ac1:
  Incomplete Configuration
  Required: add pppoe-ac-service to one or more interfaces

PPPoE Access Concentrator pppoeservice:
  Complete Configuration
```

Table 20-1: Parameters in the output from **show pppoe-ac config-check**

Parameter	Description
`Incomplete configuration`	Further configuration is required to create a valid PPPoE AC service.

Table 20-1: Parameters in the output from **show pppoe-ac config-check** (cont.)

Parameter	Description
`Complete configuration`	There is sufficient configuration of this PPPoE AC service to be valid.
`Required`	Parameters that still need to be configured for this PPPoE AC service.

Related Commands

pppoe-ac

show running-config pppoe-ac

show pppoe-ac connections

Overview Use this command to display information about current routes for the specified PPPoE Access Concentrator (AC) service or for all PPPoE AC services.

Syntax

```
show pppoe-ac [<label>] connections
```

Parameter	Description
<label>	The label for the PPPoE AC service.

Mode User Exec/Privileged Exec

Example To display current routes information for all PPPoE AC services, use the command:

```
awplus# show pppoe-ac connections
```

To display information about connected routes for the PPPoE AC service "pppoeservice" only, use the command:

```
awplus# show pppoe-ac pppoeservice connections
```

Output Figure 20-3: Example output from **show pppoe-ac connections**

```
awplus#show pppoe-ac connections
PPPoE Access Concentrator Connection Status

------------------------------------------------------------------
Route Name: pppoeservice-eth1
Route ID: 29785
Source Information
  Interface: eth1
  Session ID: 14204
  Service Name: test
  State: Open
  Peer MAC: 00:00:cd:38:01:4f
Destination Information
  Type: L2TP
  Tunnel ID: 11223
  Session ID: 57309

Route Name: ac1-eth2
Route ID: 34409
Source Information
  Interface: eth2
  Session ID: 14108
  Service Name: my_isp
  State: Open
  Peer MAC: 00:00:cd:38:01:4d
Destination Information
  Type L2TP
  Tunnel ID 47432
  Session ID 10056
```

Table 20-2: Parameters in the output from **show pppoe-ac connections**

Parameter	Description
`Route Name`	The name of the route.
`Route ID`	The ID of the route.
`Source Information`	Information about the source of the PPPoE route.
`Interface`	The incoming interface name.
`Session ID`	The PPPoE session ID.
`Service Name`	The service name that this PPPoE AC is offering. This is the service name assigned by the **service-name** command.
`State`	The state of the PPPoE connection; e.g. open.
`peer MAC`	The MAC address of the LNS.
`Destination information`	Information about the destination for this PPPoE route.
`Type`	The type of destination of the this PPPoE connection, for example, L2TP.
`Tunnel ID`	The ID of the L2TP tunnel.
`Session ID`	The ID of the PPPoE session.

Related Commands pppoe-ac

show pppoe-ac statistics

Overview Use this command to displays the statistics for the PPPoE Access Concentrator (AC).

Syntax

```
show pppoe-ac statistics
```

Mode Privileged Exec

Example To display statistics for PPPoE AC, use the command:

```
awplus# show pppoe-ac statistics
```

Output Figure 20-4: Example output from **show pppoe-ac statistics**

```
awplus#sh pppoe-ac statistics
PPPoE Access Concentrator Statistics
 Name                                    Value
-----------------------------------------------------------------
 lnsLookupSuccessfulRequests             0
 lnsLookupFailedRequests                 0
 lnsLookupDnsFailures                    0
 lnsLookupRadiusFailures                 0
 l2tpTunnelsOpened                       2
 l2tpSessionsOpened                      2
 l2tpSessionsClosed                      0
 l2tpDnsFailures                         0
 pppoePadiReceived                       2
 pppoeInvalidPadi                        0
 pppoePadoSent                           2
 pppoePadsSent                           2
 pppoePadrReceived                       2
 pppoeInvalidPadr                        0
 pppoeResentPadr                         0
 pppoePadtReceived                       0
 pppoeInvalidPadt                        0
 pppoePadtSent                           0
 routesCreated                           2
 routesCreateFail                        0
 routesDeleted                           0
 routesDeleteFail                        0
 routesDstOpenFail                       0
 routesDestCloseFail                     0
 routesSourceCloseFail                   0
 routesClosedByDest                      0
 routesClosedBySource                    0
```

Table 20-3: Parameters in the output from **show pppoe-ac statistic**

Parameter	Description
lnsLookupSuccessfulRequests	The number of successful LNS address lookup requests.
lnsLookupFailedRequests	The number of failed LNS address lookup requests.
lnsLookupDnsFailures	The number of LNS address DNS lookup failures.
lnsLookupRadiusFailures	The number of LNS address RADIUS lookup failures.
l2tpTunnelsOpened	The number of L2TP tunnels opened.
l2tpSessionsOpened	The number of L2TP sessions opened.
l2tpSessionsClosed	The number of L2TP sessions closed.
l2tpDnsFailures	The number of L2TP DNS lookup failures.
pppoePadiReceived	The number of PADI packets received.
pppoeInvalidPadi	The number of invalid PADI packets received.
pppoePadoSent	The number of PADO packets sent.
pppoePadsSent	The number of PADS packets sent.
pppoePadrReceived	The number of PADR packets received.
pppoeInvalidPadr	The number of invalid PADR packets received.
pppoeResentPadr	The number of resent PADR packets received.
pppoePadtReceived	The number of PADT packets received.
pppoeInvalidPadt	The number of invalid PADT packets received.
pppoePadtSent	The number of PADT packets sent.
routesCreated	The number of routes created.
routesCreateFail	The number of route create failures.
routesDeleted	The number of routes deleted.
routesDeleteFail	The number of route delete failures.
routesDstOpenFail	The number of destination open failures.

Table 20-3: Parameters in the output from **show pppoe-ac statistic** (cont.)

Parameter	Description
routesDestCloseFail	The number of destination close failures.
routesSourceCloseFail	The number of source close failures.
routesClosedByDest	The number of routes closed by the destination.
routesClosedBySource	The number of routes closed by the source.

Related Commands

clear pppoe-ac statistics

pppoe-ac

show running-config pppoe-ac

Overview Use this command to display the PPPoE Access Concentrator (AC) running configuration.

Syntax

```
show running-config pppoe-ac
```

Mode Privileged Exec

Example To display the running configuration for the PPPoE AC, use the command:

```
awplus# running-config pppoe-ac
```

Output Figure 20-5: Example output from **show running-config pppoe-ac**

```
awplus#show running-config pppoe-ac
 pppoe-ac-service ISP-service
  service-name remote-office advertised
  ppp-auth-protocols pap
  destination l2tp
  l2tp peer-address static 192.168.11.2
  l2tp profile PUBLIC
```

Related Commands

destination l2tp

l2tp peer-address dns-lookup

l2tp peer-address radius-lookup group

l2tp peer-address static

l2tp profile

pppoe-ac

ppp-auth-protocol

proxy-auth

service-name

show pppoe-ac config-check

Part 3: Routing

21 IP Addressing and Protocol Commands

Introduction

Overview

This chapter provides an alphabetical reference of commands used to configure various IP features, including the following protocols:

- Address Resolution Protocol (ARP)

For more information, see the IP Feature Overview and Configuration Guide.

Command List

- "arp-aging-timeout" on page 648
- "arp (IP address MAC)" on page 649
- "arp log" on page 651
- "arp opportunistic-nd" on page 654
- "arp-reply-bc-dmac" on page 656
- "clear arp-cache" on page 657
- "debug ip packet interface" on page 659
- "ip address (IP Addressing and Protocol)" on page 661
- "ip directed-broadcast" on page 663
- "ip forward-protocol udp" on page 665
- "ip gratuitous-arp-link" on page 667
- "ip helper-address" on page 669
- "ip limited-local-proxy-arp" on page 671
- "ip local-proxy-arp" on page 673
- "ip proxy-arp" on page 674
- "ip redirects" on page 675
- "ip tcp synack-retries" on page 676
- "ip tcp timeout established" on page 677

- "ip unreachables" on page 678
- "local-proxy-arp" on page 680
- "optimistic-nd" on page 681
- "ping" on page 682
- "show arp" on page 684
- "show debugging ip packet" on page 687
- "show ip forwarding" on page 689
- "show ip interface" on page 690
- "show ip interface vrf" on page 691
- "show ip sockets" on page 693
- "show ip traffic" on page 696
- "tcpdump" on page 698
- "traceroute" on page 699
- "undebug ip packet interface" on page 700

arp-aging-timeout

Overview This command sets a timeout period on dynamic ARP entries associated with a specific interface. If your device stops receiving traffic for the host specified in a dynamic ARP entry, it deletes the ARP entry from the ARP cache after this timeout is reached.

Your device times out dynamic ARP entries to ensure that the cache does not fill with entries for hosts that are no longer active. Static ARP entries are not aged or automatically deleted.

By default the time limit for dynamic ARP entries is 300 seconds on all interfaces.

The **no** variant of this command sets the time limit to the default of 300 seconds.

Syntax

```
arp-aging-timeout <0-432000>
no arp-aging timeout
```

Parameter	Description
<0-432000>	The timeout period in seconds.

Default 300 seconds (5 minutes)

Mode Interface Configuration for a VLAN interface.

Example To set the ARP entries on interface `vlan30` to time out after two minutes, use the commands:

```
awplus# configure terminal
awplus(config)# interface vlan30
awplus(config-if)# arp-aging-timeout 120
```

Related Commands

clear arp-cache

show arp

arp (IP address MAC)

Overview This command adds a static ARP entry to the ARP cache. This is typically used to add entries for hosts that do not support ARP or to speed up the address resolution function for a host. The ARP entry must not already exist. Use the **alias** parameter to allow your device to respond to ARP requests for this IP address.

If VRF-lite is configured, you can add ARP entries to either the global cache or for a specific VRF instance.

The **no** variant of this command removes the static ARP entry. Use the clear arp-cache command to remove the dynamic ARP entries in the ARP cache.

Syntax

```
arp <ip-addr> <mac-address> [<port-number>] [alias]
no arp <ip-addr>
```

Syntax (VRF-lite)

```
arp [vrf <vrf-name>] <ip-addr> <mac-address> [<port-number>]
[alias]
no arp [vrf <vrf-name>] <ip-addr>
```

Parameter	Description
<ip-addr>	The IPv4 address of the device you are adding as a static ARP entry.
<mac-address>	The MAC address of the device you are adding as a static ARP entry, in hexadecimal notation with the format HHHH.HHHH.HHHH.
<port-number>	The port number associated with the IP address. Specify this when the IP address is part of a VLAN.
`alias`	Allows your device to respond to ARP requests for the IP address. Proxy ARP must be enabled on the interface before using this parameter.
`vrf`	Apply this command to a VRF instance.
<vrf-name>	The name of the VRF instance.

Mode Global Configuration

Examples To add the IP address 10.10.10.9 with the MAC address 0010.2533.4655 into the ARP cache, and have your device respond to ARP requests for this address, use the commands:

```
awplus# configure terminal
awplus(config)# arp 10.10.10.9 0010.2355.4566 alias
```

Example (VRF-lite)

To apply the above example within a VRF instance called `red` use the following commands:

```
awplus# configure terminal
awplus(config)# arp vrf red 10.10.10.9 0010.2355.4566 alias
```

Related Commands

clear arp-cache

ip proxy-arp

show arp

Command changes

Version 5.4.6-2.1: VRF-lite support added.

arp log

Overview This command enables the logging of dynamic and static ARP entries in the ARP cache. The ARP cache contains mappings of device ports, VLAN IDs, and IP addresses to physical MAC addresses for hosts.

This command can display the MAC addresses in the ARP log either using the notation HHHH.HHHH.HHHH, or using the IEEE standard hexadecimal notation (HH-HH-HH-HH-HH-HH).

Use the **no** variant of this command to disable the logging of ARP entries.

Syntax

```
arp log [mac-address-format ieee]
no arp log [mac-address-format ieee]
```

Parameter	Description
`mac-address-format ieee`	Display the MAC address in the standard IEEE format (HH-HH-HH-HH-HH-HH), instead of displaying the MAC address with the format HHHH.HHHH.HHHH.

Default The ARP logging feature is disabled by default.

Mode Global Configuration

Usage You have the option to change how the MAC address is displayed in the ARP log message. The output can either use the notation HHHH.HHHH.HHHH or HH-HH-HH-HH-HH-HH.

Enter **arp log** to use HHHH.HHHH.HHHH notation.

Enter **arp log mac-address-format ieee** to use HH-HH-HH-HH-HH-HH notation.

Enter **no arp log mac-address-format ieee** to revert from HH-HH-HH-HH-HH-HH to HHHH.HHHH.HHHH.

Enter **no arp log** to disable ARP logging.

To display ARP log messages use the command **show log | include ARP_LOG**.

Examples To enable ARP logging and specify that the MAC address in the log message is displayed in HHHH.HHHH.HHHH notation, use the following commands:

```
awplus# configure terminal
awplus(config)# arp log
```

To disable ARP logging on the device, use the following commands:

```
awplus# configure terminal
awplus(config)# no arp log
```

To enable ARP logging and specify that the MAC address in the log message is displayed in the standard IEEE format hexadecimal notation (HH-HH-HH-HH-HH-HH), use the following commands:

```
awplus# configure terminal
awplus(config)# arp log mac-address-format ieee
```

To leave ARP logging enabled, but stop using HH-HH-HH-HH-HH-HH format and use HHHH.HHHH.HHHH format instead, use the following commands:

```
awplus# configure terminal
awplus(config)# no arp log mac-address-format ieee
```

To display ARP log messages, use the following command:

```
awplus# show log | include ARP_LOG
```

Output Figure 21-1: Output from **show log | include ARP_LOG** after enabling ARP logging using **arp log**. Note that this output uses HHHH.HHHH.HHHH format.

```
awplus#configure terminal
awplus(config)#arp log
awplus(config)#exit
awplus#show log | include ARP_LOG
2016 Oct 6 06:21:01 user.notice awplus HSL[1007]: ARP_LOG port1.0.1 vlan1 add
0013.4078.3b98 (192.168.2.4)
2016 Oct 6 06:22:30 user.notice awplus HSL[1007]: ARP_LOG port1.0.1 vlan1 del
0013.4078.3b98 (192.168.2.4)
2016 Oct 6 06:23:26 user.notice awplus HSL[1007]: ARP_LOG port1.0.1 vlan1 add
0030.940e.136b (192.168.2.20)
2016 Oct 6 06:23:30 user.notice awplus IMISH[1830]: show log | include ARP_LOG
```

Figure 21-2: Output from **show log | include ARP_LOG** after enabling ARP logging using **arp log mac-address format ieee**. Note that this output uses HH-HH-HH-HH-HH-HH format.

```
awplus#configure terminal
awplus(config)#arp log mac-address-format ieee
awplus(config)#exit
awplus#show log | include ARP_LOG
2016 Oct 6 06:25:28 user.notice awplus HSL[1007]: ARP_LOG port1.0.1 vlan1 add
00-17-9a-b6-03-69 (192.168.2.12)
2016 Oct 6 06:25:30 user.notice awplus HSL[1007]: ARP_LOG port1.0.1 vlan1 add
00-03-37-6b-a6-a5 (192.168.2.10)
2016 Oct 6 06:26:53 user.notice awplus HSL[1007]: ARP_LOG port1.0.1 vlan1 del
00-30-94-0e-13-6b (192.168.2.20)
2016 Oct 6 06:27:31 user.notice awplus HSL[1007]: ARP_LOG port1.0.1 vlan1 del
00-17-9a-b6-03-69 (192.168.2.12)
2016 Oct 6 06:28:09 user.notice awplus HSL[1007]: ARP_LOG port1.0.1 vlan1 del
00-03-37-6b-a6-a5 (192.168.2.10)
2016 Oct 6 06:28:14 user.notice awplus IMISH[1830]: show log | include ARP_LOG
```

The following table lists the parameters in output of the **show log | include ARP_LOG** command. The ARP log message format is:

```
<date> <time> <severity> <hostname> <program-name>
ARP_LOG <port-number> <vid> <operation> <MAC> <IP>
```

Table 21-1: Parameters in the output from **show log | include ARP_LOG**

Parameter	Description
ARP_LOG	Indicates that ARP log entry information follows.
<port-number>	Indicates device port number for the ARP log entry.
<vid>	Indicates the VLAN ID for the ARP log entry.
<operation>	Indicates "add" if the ARP log entry displays an ARP addition. Indicates "del" if the ARP log entry displays an ARP deletion.
<MAC>	Indicates the MAC address for the ARP log entry, either in the default hexadecimal notation (HHHH.HHHH.HHHH) or in the IEEE standard format hexadecimal notation (HH-HH-HH-HH-HH-HH) as specified with the **arp log** or the **arp log mac-address-format ieee** command.
<IP>	Indicates the IP address for the ARP log entry.

Related Commands

show log

show running-config

arp opportunistic-nd

Overview Use this command to enable opportunistic neighbor discovery for the global ARP cache. This command changes the behavior for unsolicited ARP packet forwarding on the device.

When using VRF-lite, you can use this command to enable opportunistic neighbor discovery for a named VRF instance.

Use the **no** variant of this command to disable opportunistic neighbor discovery for the global ARP cache.

Syntax

```
arp opportunistic-nd
no arp opportunistic-nd
```

Syntax (VRF-lite)

```
arp opportunistic-nd [vrf <vrf-name>]
no arp opportunistic-nd [vrf <vrf-name>]
```

Parameter	Description
`vrf`	Apply this command to a VRF instance.
<vrf-name>	The name of the VRF instance.

Default Opportunistic neighbor discovery is disabled by default.

Mode Global Configuration

Usage When opportunistic neighbor discovery is enabled, the device will reply to any received unsolicited ARP packets (but not gratuitous ARP packets). The source MAC address for the unsolicited ARP packet is added to the ARP cache, so the device forwards the ARP packet. When opportunistic neighbor discovery is disabled, the source MAC address for the ARP packet is not added to the ARP cache, so the ARP packet is not forwarded by the device.

Note this command enables or disables opportunistic neighbor discovery for a VRF instance if the **vrf** parameter and an instance name are applied. If a VRF instance is not specified, then opportunistic neighbor discovery is enabled or disabled for device ports configured for IPv4.

Examples To enable opportunistic neighbor discovery for the global ARP cache, enter:

```
awplus# configure terminal
awplus(config)# arp opportunistic-nd
```

To disable opportunistic neighbor discovery for the global ARP cache, enter:

```
awplus# configure terminal
awplus(config)# no arp opportunistic-nd
```

Example (VRF-lite)

To enable opportunistic neighbor discovery for the VRF instance 'blue', enter:

```
awplus# configure terminal
awplus(config)# arp opportunistic-nd vrf blue
```

To disable opportunistic neighbor discovery for the VRF instance 'blue', enter:

```
awplus# configure terminal
awplus(config)# no arp opportunistic-nd vrf blue
```

Related Commands

ipv6 opportunistic-nd

show arp

show running-config interface

Command changes

Version 5.4.6-2.1: VRF-lite support added.

arp-reply-bc-dmac

Overview Use this command to allow processing of ARP replies that arrive with a broadcast destination MAC (ffff.ffff.ffff). This makes neighbors reachable if they send ARP responses that contain a broadcast destination MAC.

Use the **no** variant of this command to turn off processing of ARP replies that arrive with a broadcast destination MAC.

Syntax

```
arp-reply-bc-dmac
no arp-reply-bc-dmac
```

Default By default, this functionality is disabled.

Mode Interface Configuration for VLAN, Eth and bridge interfaces

Example To allow processing of ARP replies that arrive on VLAN2 with a broadcast destination MAC, use the commands:

```
awplus# configure terminal
awplus(config)# interface vlan2
awplus(config-if)# arp-reply-bc-dmac
```

Related Commands clear arp-cache

show arp

clear arp-cache

Overview This command deletes dynamic ARP entries from the ARP cache. You can optionally specify the IPv4 address of an ARP entry to be cleared from the ARP cache.

When running VRF-lite, this command deletes dynamic ARP entries either from the ARP cache of a specific VRF instance, or from the ARP cache of the Global VRF instance. To delete all ARP entries from both the Global VRF instance and all VRF instances, use the command with no parameters. You can optionally specify the IPv4 address for the VRF instance to clear an ARP entry from the ARP cache.

Syntax
```
clear arp-cache [<ip-address>]
```

Syntax (VRF-lite)
```
clear arp-cache [vrf <vrf-name>|global] [<ip-address>]
```

Parameter	Description
<ip-address>	Specifies a specific IPv4 address for a VRF instance whose entries are to be cleared from the ARP cache.
`global`	When VRF-lite is configured, apply this command to the global routing and forwarding table.
`vrf`	Apply this command to the specified VRF instance.
<vrf-name>	The VRF instance name

Mode Privileged Exec

Usage To display the entries in the ARP cache, use the show arp command. To remove static ARP entries, use the no variant of the arp (IP address MAC) command.

Example To clear all dynamic ARP entries, use the command:

```
awplus# clear arp-cache
```

To clear all dynamic ARP entries associated with the IPv4 address 192.168.1.1, use the command:

```
awplus# clear arp-cache 192.168.1.1
```

Example (VRF-lite) To clear the dynamic ARP entries from the VRF instance named blue, use the commands:

```
awplus# clear arp-cache vrf blue
```

To clear the dynamic ARP entries from the VRF instance named blue with the IPv4 address 192.168.1.1, use the commands:

```
awplus# clear arp-cache vrf blue 192.168.1.1
```

When running VRF-lite, to clear the dynamic ARP entries from the global VRF-lite and all VRF instances, use the command:

```
awplus# clear arp-cache
```

Related Commands

arp (IP address MAC)

show arp

debug ip packet interface

Overview The **debug ip packet interface** command enables IP packet debug and is controlled by the **terminal monitor** command.

If the optional **icmp** keyword is specified then ICMP packets are shown in the output.

The **no** variant of this command disables the **debug ip interface** command.

Syntax

```
debug ip packet interface {<interface-name>|all} [address
<ip-address>|verbose|hex|arp|udp|tcp|icmp]
```

```
no debug ip packet interface [<interface-name>]
```

Parameter	Description
<interface>	Specify a single Layer 3 interface name (not a range of interfaces) This keyword can be specified as either all or as a single Layer 3 interface to show debugging for either all interfaces or a single interface.
`all`	Specify all Layer 3 interfaces on the device.
<ip-address>	Specify an IPv4 address. If this keyword is specified, then only packets with the specified IP address as specified in the ip-address placeholder are shown in the output.
`verbose`	Specify **verbose** to output more of the IP packet. If this keyword is specified then more of the packet is shown in the output.
`hex`	Specify **hex** to output the IP packet in hexadecimal. If this keyword is specified, then the output for the packet is shown in hex.
`arp`	Specify **arp** to output ARP protocol packets. If this keyword is specified, then ARP packets are shown in the output.
`udp`	Specify **udp** to output UDP protocol packets. If this keyword is specified then UDP packets are shown in the output.
`tcp`	Specify **tcp** to output TCP protocol packets. If this keyword is specified, then TCP packets are shown in the output.
`icmp`	Specify **icmp** to output ICMP protocol packets. If this keyword is specified, then ICMP packets are shown in the output.

Mode Privileged Exec and Global Configuration

Examples

To turn on ARP packet debugging on `vlan1`, use the command:

```
awplus# debug ip packet interface vlan1 arp
```

To turn on all packet debugging on all interfaces on the device, use the command:

```
awplus# debug ip packet interface all
```

To turn on TCP packet debugging on `vlan1` and IP address `192.168.2.4`, use the command:

```
awplus# debug ip packet interface vlan1 address 192.168.2.4 tcp
```

To turn off IP packet interface debugging on all interfaces, use the command:

```
awplus# no debug ip packet interface
```

To turn off IP packet interface debugging on interface `vlan2`, use the command:

```
awplus# no debug ip packet interface vlan2
```

Related Commands

no debug all

show debugging ip dns forwarding

tcpdump

terminal monitor

undebug ip packet interface

ip address (IP Addressing and Protocol)

Overview This command sets a static IP address on an interface.

The **no** variant of this command removes the IP address from the interface. You cannot remove the primary address when a secondary address is present.

Syntax

```
ip address <ip-addr/prefix-length> [secondary] [label <label>]
no ip address [<ip-addr/prefix-length>] [secondary]
```

Parameter	Description
<ip-addr/prefix-length>	The IPv4 address and prefix length you are assigning to the interface.
`secondary`	Secondary IP address.
`label`	Adds a user-defined description of the secondary IP address.
<label>	A user-defined description of the secondary IP address. Valid characters are any printable character and spaces.

Mode Interface Configuration for a VLAN interface, a local loopback interface, or a PPP interface.

Usage To set the primary IP address on the interface, specify only **ip address** *<ip-address/m>*. This overwrites any configured primary IP address. To add additional IP addresses on this interface, use the **secondary** parameter. You must configure a primary address on the interface before configuring a secondary address.

NOTE: *Use **show running-config interface** not **show ip interface brief** when you need to view a secondary address configured on an interface. **show ip interface brief** will only show the primary address not a secondary address for an interface.*

Examples To add the primary IP address `10.10.10.50/24` to the interface `vlan3`, use the following commands:

```
awplus# configure terminal
awplus(config)# interface vlan3
awplus(config-if)# ip address 10.10.10.50/24
```

To add the secondary IP address `10.10.11.50/24` to the same interface, use the following commands:

```
awplus# configure terminal
awplus(config)# interface vlan3
awplus(config-if)# ip address 10.10.11.50/24 secondary
```

To add the IP address `10.10.11.50/24` to the local loopback interface `lo`, use the following commands:

```
awplus# configure terminal
awplus(config)# interface lo
awplus(config-if)# ip address 10.10.11.50/24
```

To add the IP address `10.10.11.50/24` to the PPP interface `ppp0`, use the following commands:

```
awplus# configure terminal
awplus(config)# interface ppp0
awplus(config-if)# ip address 10.10.11.50/24
```

Related Commands

interface (to configure)

show ip interface

show running-config interface

ip directed-broadcast

Overview Use this command to enable flooding of directed broadcast packets into a directly connected subnet. If this command is configured on a VLAN interface, then directed broadcasts received on other VLAN interfaces, destined for the subnet on this VLAN, will be flooded to the subnet broadcast address of this VLAN.

Use the **no** variant of this command to disable **ip directed-broadcast**. When this feature is disabled using the **no** variant of this command, directed broadcasts are not forwarded.

Syntax

```
ip directed-broadcast
no ip directed-broadcast
```

Default The **ip directed-broadcast** command is disabled by default.

Mode Interface Configuration for a VLAN interface, a local loopback interface, or a PPP interface.

Usage IP directed-broadcast is enabled and disabled per VLAN interface. When enabled a directed broadcast packet is forwarded to an enabled VLAN interface if received on another subnet.

An IP directed broadcast is an IP packet whose destination address is a broadcast address for some IP subnet, but originates from a node that is not itself part of that destination subnet. When a directed broadcast packet reaches a device that is directly connected to its destination subnet, that packet is flooded as a broadcast on the destination subnet.

The **ip directed-broadcast c** ommand controls the flooding of directed broadcasts when they reach target subnets. The command affects the final transmission of the directed broadcast on its destination subnet. It does not affect the transit unicast routing of IP directed broadcasts. If directed broadcast is enabled for an interface, incoming directed broadcast IP packets intended for the subnet assigned to interface will be flooded as broadcasts on that subnet.

If the **no ip directed-broadcast** command is configured for an interface, directed broadcasts destined for the subnet where the interface is attached will be dropped instead of broadcast.

Examples To enable the flooding of broadcast packets out via the PPP interface ppp0, use the following commands:

```
awplus# configure terminal
awplus(config)# interface ppp0
awplus(config-if)# ip directed-broadcast
```

To disable the flooding of broadcast packets via PPP interface ppp0, use the following commands:

```
awplus# configure terminal
awplus(config)# interface ppp0
awplus(config-if)# no ip directed-broadcast
```

Related Commands

ip forward-protocol udp

ip helper-address

show running-config

ip forward-protocol udp

Overview This command enables you to control which UDP broadcasts will be forwarded to the helper address(es). A UDP broadcast will only be forwarded if the destination UDP port number in the packet matches one of the port numbers specified using this command.

Refer to the IANA site (www.iana.org) for a list of assigned UDP port numbers for protocols to forward using **ip forward-protocol udp**.

Use the **no** variant of this command to remove a port number from the list of destination port numbers that are used as the criterion for deciding if a given UDP broadcast should be forwarded to the IP helper address(es).

Syntax

```
ip forward-protocol udp <port>
no ip forward-protocol udp <port>
```

Parameter	Description
<port>	UDP Port Number.

Default The **ip forward-protocol udp** command is not enabled by default.

Mode Global Configuration

Usage Combined with the ip helper-address command in interface mode, the **ip forward-protocol udp** command in Global Configuration mode allows control of which protocols (destination port numbers) are forwarded. The **ip forward-protocol udp** command configures protocols for forwarding, and the **ip helper-address** command configures the destination address(es).

NOTE:

*The types of UDP broadcast packets that the device will forward are ONLY those specified by the **ip forward-protocol** command(s). There are no other UDP packet types that the IP helper process forwards by default.*

Examples To configure forwarding of packets on a UDP port, use the following commands:

```
awplus# configure terminal
awplus(config)# ip forward-protocol udp <port>
```

To delete a UDP port from the UDP ports that the device forwards, use the following commands:

```
awplus# configure terminal
awplus(config)# no ip forward-protocol udp <port>
```

Related Commands

ip helper-address

ip directed-broadcast

show running-config

ip gratuitous-arp-link

Overview This command sets the Gratuitous ARP time limit for all switchports. The time limit restricts the sending of Gratuitous ARP packets to one Gratuitous ARP packet within the time in seconds.

NOTE: *This command specifies time between sequences of Gratuitous ARP packets, and time between individual Gratuitous ARP packets occurring in a sequence, to allow legacy support for older devices and interoperation between other devices that are not ready to receive and forward data until several seconds after linkup.*

Additionally, jitter has been applied to the delay following linkup, so Gratuitous ARP packets applicable to a given port are spread over a period of 1 second so are not all sent at once. Remaining Gratuitous ARP packets in the sequence occur after a fixed delay from the first one.

Syntax

```
ip gratuitous-arp-link <0-300>
no ip gratuitous-arp-link
```

Parameter	Description
<0-300>	Specify the minimum time between sequences of Gratuitous ARPs and the fixed time between Gratuitous ARPs occurring in a sequence, in seconds. 0 disables the sending of Gratuitous ARP packets. The default is 8 seconds.

Default The default Gratuitous ARP time limit for all switchports is 8 seconds.

Mode Global Configuration

Usage Every switchport will send a sequence of 3 Gratuitous ARP packets to each VLAN that the switchport is a member of, whenever the switchport moves to the forwarding state. The first Gratuitous ARP packet is sent 1 second after the switchport becomes a forwarding switchport. The second and third Gratuitous ARP packets are each sent after the time period specified by the Gratuitous ARP time limit.

Additionally, the Gratuitous ARP time limit specifies the minimum time between the end of one Gratuitous ARP sequence and the start of another Gratuitous ARP sequence. When a link is flapping, the switchport's state is set to forwarding several times. The Gratuitous ARP time limit is imposed to prevent Gratuitous ARP packets from being sent undesirably often.

Examples To disable the sending of Gratuitous ARP packets, use the commands :

```
awplus# configure terminal
awplus(config)# ip gratuitous-arp-link 0
```

To restrict the sending of Gratuitous ARP packets to one every 20 seconds, use the commands:

```
awplus# configure terminal
awplus(config)# ip gratuitous-arp-link 20
```

Validation Commands show running-config

ip helper-address

Overview This command adds a forwarding destination address for IP Helper to enable forwarding of User Datagram Protocol (UDP) broadcasts on an interface.

Use the **no** variant of this command to disable the forwarding of broadcast packets to specific addresses.

Syntax

```
ip helper-address <ip-addr>
no ip helper-address <ip-addr>
```

Parameter	Description
<ip-addr>	Forwarding destination IP address for IP Helper.

Default The destination address for the **ip helper-address** command is not configured by default.

Mode Interface Configuration for a VLAN interface, a local loopback interface, or a PPP interface.

Usage Combined with the ip forward-protocol udp command in global configuration mode, the **ip helper-address** command in interface mode allows control of which protocols (destination port numbers) are forwarded. The **ip forward-protocol udp** command configures protocols for forwarding, and the **ip helper-address** command configures the destination address(es).

The destination address can be a unicast address or a subnet broadcast address. The UDP destination port is configured separately with the **ip forward-protocol udp** command. If multiple destination addresses are registered then UDP packets are forwarded to each IP address added to an IP Helper. Up to 32 destination addresses may be added using IP Helper.

The device will only forward the types of UDP broadcast packets that are specified by the **ip forward-protocol** command(s). The device does not forward any other UDP packet types by default.

The **ip helper-address** command does not support BOOTP / DHCP Relay. The service dhcp-relay command must be used instead. For this reason, you may not configure UDP ports 67 and 68 with the **ip forward-protocol** command.

See the IP Feature Overview and Configuration Guide for more information about DHCP Relay.

Examples The following example defines IPv4 address 192.168.1.100 as an IP Helper destination address to which to forward UDP broadcasts received on ppp0:

```
awplus# configure terminal
awplus(config)# interface ppp0
awplus(config-if)# ip helper-address 192.168.1.100
```

The following example removes IPv4 address 192.168.1.100 as an IP Helper destination address to which to forward UDP broadcasts received on ppp0:

```
awplus# configure terminal
awplus(config)# interface ppp0
awplus(config-if)# no ip helper-address 192.168.1.100
```

Related Commands

ip forward-protocol udp

ip directed-broadcast

show running-config

ip limited-local-proxy-arp

Overview Use this command to enable local proxy ARP, but only for a specified set of IP addresses. This makes the device respond to ARP requests for those IP addresses when the addresses are reachable via the interface you are configuring.

To specify the IP addresses, use the command local-proxy-arp.

Use the **no** variant of this command to disable limited local proxy ARP. This stops your device from intercepting and responding to ARP requests for the specified hosts. This allows the hosts to use MAC address resolution to communicate directly with one another.

Syntax

```
ip limited-local-proxy-arp
no ip limited-local-proxy-arp
```

Default Limited local proxy ARP is disabled by default.

Mode Interface Configuration

Usage Limited local proxy ARP supports Static NAT configurations in which the NAT configuration's public address is different to the ethernet interface's address.

On such ethernet interfaces, the device needs to respond to ARP requests for the public address so that it will receive packets targeted at that address.

Limited local proxy ARP makes this possible. It is especially useful when you have a number of 1-1 NAT configurations and each public address falls within the public interface's subnet. If you enable limited local proxy ARP on the public interface and specify suitable addresses, the device will respond to ARP requests for those addresses, as long as the addresses are routed out the interface the ARP requests are received on. The device responds with its own MAC address.

Example The following configuration snippet shows how to use limited local proxy ARP, if you are using NAT for an HTTP server with an address of 172.22.0.3 connected via eth1, and eth1 has an address of 172.22.0.1:

```
! Create a private zone for the HTTP server with address 172.22.200.3:
zone private
network vlan1
ip subnet 172.22.200.0/24
host http_server
ip address 172.22.200.3
!
! Create a public zone for the HTTP server with address 172.22.0.3:
zone public
network eth1
ip subnet 0.0.0.0/0 interface eth1
host http_server
ip address 172.22.0.3
!
! Create a NAT rule to map from the public to the private zone:
nat
rule 10 portfwd http from public.eth1 to public.eth1.http_server with dst
private.vlan1.http_server
enable
!
! Configure eth1. It has a different public address than the HTTP server:
interface eth1
ip limited local-proxy-arp
ip address 172.22.0.1/24
!
! Configure vlan1:
interface vlan1
ip address 172.22.200.5/24
!
! Tell the device to respond to ARPs for the HTTP server public address:
local-proxy-arp 172.22.0.3/32
```

Related Commands

ip local-proxy-arp

local-proxy-arp

ip local-proxy-arp

Overview This command allows you to stop MAC address resolution between hosts within a private VLAN edge interface. Local Proxy ARP works by intercepting ARP requests between hosts within a subnet and responding with your device's own MAC address details instead of the destination host's details. This stops hosts from learning the MAC address of other hosts within its subnet through ARP requests.

Local Proxy ARP ensures that devices within a subnet cannot send traffic that bypasses Layer 3 routing on your device. This lets you monitor and filter traffic between hosts in the same subnet, and enables you to have control over which hosts may communicate with one another.

When Local Proxy ARP is operating on an interface, your device does not generate or forward any ICMP-Redirect messages on that interface. This command does not enable proxy ARP on the interface; see the ip proxy-arp command for more information on enabling proxy ARP.

The **no** variant of this command disables Local Proxy ARP to stop your device from intercepting and responding to ARP requests between hosts within a subnet. This allows the hosts to use MAC address resolution to communicate directly with one another. Local Proxy ARP is disabled by default.

Syntax

```
ip local-proxy-arp
no ip local-proxy-arp
```

Default Local proxy ARP is disabled by default

Mode Interface Configuration for a VLAN interface or a local loopback interface.

Examples To enable your device to apply Local Proxy ARP on the interface vlan7, use the following commands:

```
awplus# configure terminal
awplus(config)# interface vlan7
awplus(config-if)# ip local-proxy-arp
```

To disable your device to apply Local Proxy ARP on the interface `vlan7`, use the following commands:

```
awplus# configure terminal
awplus(config)# interface vlan7
awplus(config-if)# no ip local-proxy-arp
```

Related Commands ip proxy-arp

show arp

show running-config

ip proxy-arp

Overview This command enables Proxy ARP responses to ARP requests on an interface. When enabled, your device intercepts ARP broadcast packets and substitutes its own physical address for that of the remote host. By responding to the ARP request, your device ensures that subsequent packets from the local host are directed to its physical address, and it can then forward these to the remote host.

Your device responds only when it has a specific route to the address being requested, excluding the interface route that the ARP request arrived from. It ignores all other ARP requests. See the ip local-proxy-arp command about enabling your device to respond to other ARP messages.

The **no** variant of this command disables Proxy ARP responses on an interface. Proxy ARP is disabled by default.

Syntax

```
ip proxy-arp
no ip proxy-arp
```

Default Proxy ARP is disabled by default.

Mode Interface Configuration for a VLAN interface or a local loopback interface.

Examples To enable your device to Proxy ARP on the interface `vlan13`, use the following commands:

```
awplus# configure terminal
awplus(config)# interface vlan13
awplus(config-if)# ip proxy-arp
```

To disable your device to Proxy ARP on the interface `vlan13`, use the following commands:

```
awplus# configure terminal
awplus(config)# interface vlan13
awplus(config-if)# no ip proxy-arp
```

Related Commands

arp (IP address MAC)

ip local-proxy-arp

show arp

show running-config

ip redirects

Overview This command enables the device to send ICMP redirects.

Use the **no** variant of this command to stop the device from sending ICMP redirects.

Syntax

```
ip redirects
no ip redirects
```

Default ICMP redirects are disabled by default.

Mode Global Configuration.

Usage ICMP redirect messages are used to notify hosts that a better route is available to a destination.

ICMP redirects are used when a packet is routed into the device on the same interface that the packet is routed out of the device. ICMP redirects are only sent to packet sources that are directly connected to the device.

Examples To enable the switch to send ICMP redirects, use the following commands:

```
awplus# configure terminal
awplus(config)# ip redirects
```

To stop the switch from sending ICMP redirects, use the following commands:

```
awplus# configure terminal
awplus(config)# no ip redirects
```

ip tcp synack-retries

Overview Use this command to specify how many times the switch will retry sending a SYN ACK for a TCP connection for which it has received a SYN but not an ACK. Such connections are called half-open TCP connections. This command allows you to influence how long half-open TCP connections take to time out.

Use the **no** variant of this command to return to the default setting of 5 retries.

Syntax

```
ip tcp synack-retries <0-255>
no ip tcp synack-retries
```

Parameter	Description
<0-255>	Number of times to retry sending the SYN ACK

Default 5 retries

Mode Global Configuration

Usage The following table shows the approximate correlation between the number of retries and the time half-open TCP connections take to time out.

Number of retries	Approximate lower bound for the timeout
0 retries	1 second
1 retry	3 seconds
2 retries	7 seconds
3 retries	15 seconds
4 retries	31 seconds
5 retries	63 seconds

Example To retry twice, which leads to a timeout of approximately 7 seconds, use the commands:

```
awplus# configure terminal
awplus(config)# ip tcp synack-retries 2
```

Related Commands show running-config

Command changes Version 5.4.7-0.2: command added

ip tcp timeout established

Overview Use this command to set the idle timeout for all established TCP connections.

Use the **no** variant of this command to set the idle timeout back to the default of 3600 seconds.

Syntax

```
ip tcp timeout established <1-31536000>
no ip tcp timeout established
```

Parameter	Description
<1-31536000>	Idle timeout for established TCP connections in seconds from 1 to 3153600.

Default 3600 seconds (1 hour)

Mode Global Configuration

Usage By default, when a TCP session is successfully established through the firewall, when the session goes idle, it automatically times out of the firewall connection tracking table after 3600 seconds. In some situations it may be beneficial to time out unused established TCP sessions earlier.

For example, in a busy environment where there is an excessive number of sessions being established, the firewall connection tracking table could become oversubscribed, with new connections being blocked until older sessions are timed out.

Example To set a non-default TCP session timeout for established idle sessions of 1800 seconds (30 minutes), use the commands:

```
awplus# configure terminal
awplus(config)# ip tcp timeout established 1800
```

Example To set the TCP session timeout for established idle sessions back to the default setting of 3600 seconds, use the commands:

```
awplus# configure terminal
awplus(config)# no ip tcp timeout established
```

Related Commands show running-config

Command changes Version 5.4.6-1.1: command added

ip unreachables

Overview Use this command to enable ICMP (Internet Control Message Protocol) type 3, destination unreachable, messages.

Use the **no** variant of this command to disable destination unreachable messages. This prevents an attacker from using these messages to discover the topology of a network.

Syntax

```
ip unreachables
no ip unreachables
```

Default Destination unreachable messages are enabled by default.

Mode Global Configuration

Usage When a device receives a packet for a destination that is unreachable it returns an ICMP type 3 message, this message includes a reason code, as per the table below. An attacker can use these messages to obtain information regarding the topology of a network. Disabling destination unreachable messages, using the **no ip unreachables** command, secures your network against this type of probing.

NOTE: *Disabling ICMP destination unreachable messages breaks applications such as traceroute and Path MTU Discovery (PMTUD), which depend on these messages to operate correctly.*

Table 21-2: ICMP type 3 reason codes and description

Code	Description [RFC]
0	Network unreachable [RFC792]
1	Host unreachable [RFC792]
2	Protocol unreachable [RFC792]
3	Port unreachable [RFC792]
4	Fragmentation required, and DF flag set [RFC792]
5	Source route failed [RFC792]
6	Destination network unknown [RFC1122]
7	Destination host unknown [RFC1122]
8	Source host isolated [RFC1122]
9	Network administratively prohibited [RFC768]
10	Host administratively prohibited [RFC869]
11	Network unreachable for Type of Service [RFC908]
12	Host unreachable for Type of Service [RFC938]
13	Communication administratively prohibited [RFC905]

Table 21-2: ICMP type 3 reason codes and description (cont.)

Code	Description [RFC]
14	Host Precedence Violation [RFC1812]
15	Precedence cutoff in effect [RFC1812]

Example To disable destination unreachable messages, use the commands

```
awplus# configure terminal
awplus(config)# no ip unreachables
```

To enable destination unreachable messages, use the commands

```
awplus# configure terminal
awplus(config)# ip unreachables
```

local-proxy-arp

Overview Use this command to specify an IP subnet for use with limited local proxy ARP. When limited local proxy ARP is enabled with the command ip limited-local-proxy-arp, the device will respond to ARP requests for addresses in that subnet.

Use the **no** variant of this command to stop specifying a subnet for use with limited local proxy ARP.

Syntax

```
local-proxy-arp [<ip-add/mask>]
no local-proxy-arp [<ip-add/mask>]
```

Parameter	Description
<ip-add/mask>	The IP subnet to use with limited local proxy ARP, in dotted decimal format (A.B.C.D/M). To specify a single IP address, use a 32-bit mask.

Default No subnets are specified for use with limited local proxy ARP.

Mode Global Configuration

Example To specify limited local proxy ARP for the address 172.22.0.3, use the following commands:

```
awplus# configure terminal
awplus(config)# local-proxy-arp 172.22.0.3/32
```

This is part of a configuration snippet that shows how to use limited local proxy ARP with static NAT. See the command ip limited-local-proxy-arp for the whole example.

Related Commands ip limited-local-proxy-arp

optimistic-nd

Overview Use this command to enable the optimistic neighbor discovery feature for both IPv4 and IPv6.

Use the **no** variant of this command to disable the optimistic neighbor discovery feature.

Syntax

```
optimistic-nd
no optimistic-nd
```

Default The optimistic neighbor discovery feature is enabled by default.

Mode Interface Configuration for a VLAN interface.

Usage The optimistic neighbor discovery feature allows the device, after learning an IPv4 or IPv6 neighbor, to refresh the neighbor before the neighbor is deleted from the hardware L3 switching table. The neighbor is put into the “stale” state in the software switching table if is it not refreshed, then the ‘stale’ neighbors are deleted from the hardware L3 switching table.

The optimistic neighbor discovery feature enables the device to sustain L3 traffic switching to a neighbor without interruption. Without the optimistic neighbor discovery feature enabled L3 traffic is interrupted when a neighbor is “stale” and is then deleted from the L3 switching table.

If a neighbor receiving optimistic neighbor solicitations does not answer optimistic neighbor solicitations with neighbor advertisements, then the neighbor will be put into the “stale” state, and subsequently deleted from both the software and the hardware L3 switching tables.

Examples To enable the optimistic neighbor discovery feature on vlan100, use the following commands:

```
awplus# configure terminal
awplus(config)# interface vlan100
awplus(config-if)# optimistic-nd
```

To disable the optimistic neighbor discovery feature on vlan100, use the following commands:

```
awplus# configure terminal
awplus(config)# interface vlan100
awplus(config-if)# no optimistic-nd
```

Related Commands show running-config

ping

Overview This command sends a query to another IPv4 host (send Echo Request messages).

Syntax

```
ping [ip] <host> [broadcast] [df-bit {yes|no}] [interval
<0-128>] [pattern <hex-data-pattern>] [repeat
{<1-2147483647>|continuous}] [size <36-18024>] [source
<ip-addr>] [timeout <1-65535>] [tos <0-255>]
```

Syntax (VRF-lite)

```
ping [vrf <vrf-name>] [ip] <host> [broadcast] [df-bit {yes|no}]
[interval <0-128>] [pattern <hex-data-pattern>] [repeat
{<1-2147483647>|continuous}] [size <36-18024>] [source
<ip-addr>] [timeout <1-65535>] [tos <0-255>]
```

Parameter	Description
<host>	The destination IP address or hostname.
broadcast	Allow pinging of a broadcast address.
df-bit	Enable or disable the do-not-fragment bit in the IP header.
interval *<0-128>*	Specify the time interval in seconds between sending ping packets. The default is 1. You can use decimal places to specify fractions of a second. For example, to ping every millisecond, set the interval to 0.001.
pattern *<hex-data-pattern>*	Specify the hex data pattern.
repeat	Specify the number of ping packets to send.
<1-2147483647>	Specify repeat count. The default is 5.
continuous	Continuous ping
size *<36-18024>*	The number of data bytes to send, excluding the 8 byte ICMP header. The default is 56 (64 ICMP data bytes).
source *<ip-addr>*	The IP address of a configured IP interface to use as the source in the IP header of the ping packet.
timeout *<1-65535>*	The time in seconds to wait for echo replies if the ARP entry is present, before reporting that no reply was received. If no ARP entry is present, it does not wait.
tos *<0-255>*	The value of the type of service in the IP header.
vrf	Apply the command to the specified VRF instance.
<vrf-name>	The name of the VRF instance.

Mode User Exec and Privileged Exec

Example To ping the IP address 10.10.0.5 use the following command:

```
awplus# ping 10.10.0.5
```

Example (VRF-lite)

To ping the IP address 10.10.0.5 from VRF instance 'red', use the following command:

```
awplus# ping vrf red 10.10.0.5
```

NOTE: *Unless a cross-domain static or leaked route exists to the destination IP address, you must run this command from within the same routing domain as the address being pinged.*

Command changes

Version 5.4.6-2.1: VRF-lite support added.

show arp

Overview Use this command to display entries in the ARP routing and forwarding table—the ARP cache contains mappings of IP addresses to physical addresses for hosts. To have a dynamic entry in the ARP cache, a host must have used the ARP protocol to access another host.

For information on filtering and saving command output, see the "Getting Started with AlliedWare Plus" Feature Overview and Configuration Guide.

Syntax

```
show arp [security [interface [<interface-list>]]
show arp [statistics [detail][interface [<interface-list>]]
```

Syntax (VRF-lite)

```
show arp [global|security|vrf <vrf-name>]
```

Parameter	Description
`security`	Specify the DHCP Snooping ARP security output option.
`interface`	Specify an interface list for DHCP Snooping ARP security output.
<interface-list>	Specify a single Layer 3 interface name, or a range of interfaces.
`statistics`	Specify brief DHCP Snooping ARP security statistics.
`detail`	Specify detailed DHCP Snooping ARP security statistics.
`global`	When VRF-lite is configured, apply this command to the global routing and forwarding table
`vrf`	Apply this command to the specified VRF instance.
<vrf-name>	The VRF instance name

Mode User Exec and Privileged Exec

Usage Running this command with no additional parameters will display all entries in the ARP routing and forwarding table.

With VRF-lite configured, and no additional parameters entered, the command output displays all entries, listed by their VRF instance. By adding either a specific VRF instance or global parameter entry, you can selectively list ARP entries by their membership of a specific VRF instance.

Example To display all ARP entries in the ARP cache, use the following command:

```
awplus# show arp
```

Output Figure 21-3: Example output from the **show arp** command

```
awplus#show arp

IP Address       MAC Address     Interface       Port         Type
192.168.10.2     0015.77ad.fad8  vlan1           port1.0.1    dynamic
192.168.20.2     0015.77ad.fa48  vlan2           port1.0.2    dynamic
192.168.1.100    00d0.6b04.2a42  vlan2           port1.0.6    static
```

Example (VRF-lite) To display the dynamic ARP entries in the global routing instance, use the command:

```
awplus# show arp global
```

Output Figure 21-4: Example output from the **show arp global** command

```
awplus#show arp global

IP Address       MAC Address     Interface    Port         Type
192.168.10.2     0015.77ad.fad8  vlan1        port1.0.1    dynamic
192.168.20.2     0015.77ad.fa48  vlan2        port1.0.2    dynamic
192.168.1.100    00d0.6b04.2a42  vlan2        port1.0.8    static
```

Example (VRF-lite) To display the dynamic ARP entries for a VRF instance 'red', use the command:

```
awplus# show arp vrf red
```

Output Figure 21-5: Example output from the **show arp vrf red** command

```
awplus# show arp vrf red

[VRF: red]
  IP Address       MAC Address     Interface    Port         Type
  192.168.10.2     0015.77ad.fad8  vlan1        port1.0.1    dynamic
```

Table 22: Parameters in the output of the **show arp** command

Parameter	Meaning
IP Address	IP address of the network device this entry maps to.
MAC Address	Hardware address of the network device.
Interface	Interface over which the network device is accessed.
Port	Physical port that the network device is attached to.
Type	Whether the entry is a static or dynamic entry. Static entries are added using the arp (IP address MAC) command. Dynamic entries are learned from ARP request/reply message exchanges.
VRF	The name of the VRF instance. The VRF-lite components only display when VRF-lite is configured.

Related Commands

arp (IP address MAC)

clear arp-cache

Command changes

Version 5.4.6-2.1: VRF-lite support added.

show debugging ip packet

Overview Use this command to show the IP interface debugging status. IP interface debugging is set using the **debug ip packet interface** command.

For information on filtering and saving command output, see the "Getting Started with AlliedWare Plus" Feature Overview and Configuration Guide.

Syntax

```
show debugging ip packet
```

Mode User Exec and Privileged Exec

Example To display the IP interface debugging status when the terminal monitor off, use the command:

```
awplus# terminal no monitor
awplus# show debug ip packet
```

Output Figure 21-6: Example output from the **show debugging ip packet** command with **terminal monitor** off

```
awplus#terminal no monitor

awplus#show debug ip packet

IP debugging status:

interface all tcp (stopped)

interface vlan1 arp verbose (stopped)
```

Example To display the IP interface debugging status when the terminal monitor is on, use the command:

```
awplus# terminal monitor
awplus# show debug ip packet
```

Output Figure 21-7: Example output from the **show debugging ip packet** command with **terminal monitor** on

```
awplus#terminal monitor

awplus#show debug ip packet

IP debugging status:

interface all tcp (running)

interface vlan1 arp verbose (running)
```

Related Commands

debug ip packet interface

terminal monitor

show ip forwarding

Overview Use this command to display the IP forwarding status.

For information on filtering and saving command output, see the "Getting Started with AlliedWare Plus" Feature Overview and Configuration Guide.

Syntax

```
show ip forwarding
```

Mode User Exec and Privileged Exec

Example

```
awplus# show ip forwarding
```

Output Figure 21-8: Example output from the **show ip forwarding** command

```
awplus#show ip forwarding

IP forwarding is on
```

show ip interface

Overview Use this command to display information about interfaces and the IP addresses assigned to them. To display information about a specific interface, specify the interface name with the command.

For information on filtering and saving command output, see the "Getting Started with AlliedWare Plus" Feature Overview and Configuration Guide.

Syntax

```
show ip interface [<interface-list>] [brief]
```

Parameter	Description
<interface-list>	The interfaces to display information about. An interface-list can be: • an interface, e.g. `vlan2` • a continuous range of interfaces separated by a hyphen, e.g. `vlan2-8` or `vlan2-vlan5` • a comma-separated list of interfaces or interface ranges, e.g. `vlan2,vlan5,vlan8-10` The specified interfaces must exist.

Mode User Exec and Privileged Exec

Examples To show brief information for the assigned IP address for interface port1.0.2 use the command:

```
awplus# show ip interface port1.0.2 brief
```

To show the IP addresses assigned to vlan2 and vlan3, use the command:

```
awplus# show ip interface vlan2-3 brief
```

To show the IP addresses assigned to ppp0, use the command:

```
awplus# show ip interface ppp0 brief
```

Output Figure 21-9: Example output from the **show ip interface brief** command

```
Interface              IP-Address      Status          Protocol
port1.0.2              unassigned      admin up        down
vlan1                  192.168.1.1     admin up        running
vlan2                  192.168.2.1     admin up        running
vlan3                  192.168.3.1     admin up        running
vlan8                  unassigned      admin up        down
```

show ip interface vrf

Overview Use this command to display protocol and status information about configured interfaces and their assigned IP addresses in VRF instances.

For information on filtering and saving command output, see the "Getting Started with AlliedWare Plus" Feature Overview and Configuration Guide.

Syntax

```
show ip interface [vrf <vrf-name>|global]
```

Parameter	Description
`vrf`	A VRF instance.
`<vrf-name>`	The name of a specific VRF instance.
`global`	The global routing and forwarding table.

Mode User Exec and Privileged Exec

Examples To display all interfaces and IP addresses associated with a VRF instance 'red', use the command:

```
awplus# show ip interface vrf red
```

Output Figure 21-10: Example output from **show ip interface vrf red**

```
[VRF: red]
Interface            IP-Address         Status       Protocol
lo1                  unassigned         admin up     running
vlan1                192.168.10.1/24    admin up     running
```

Example To display all interfaces and IP addresses associated with all VRF instances, use the command:

```
awplus# show ip interface
```

Output Figure 21-11: Example output from the **show ip interface** with VRF-lite configured

```
Interface               IP-Address          Status          Protocol
eth0                    unassigned          admin up        down
lo                      unassigned          admin up        running
vlan1                   192.168.1.1/24      admin up        running
vlan4                   172.30.4.43/24      admin up        down

[VRF: red]
Interface               IP-Address          Status
Protocol
lo1                     unassigned          admin up        running

[VRF: blue]
Interface               IP-Address          Status
Protocol
lo2                     unassigned          admin up        running
```

Command changes Version 5.4.6-2.1: VRF-lite support added.

show ip sockets

Overview Use this command to display information about the IP or TCP sockets that are present on the device. It includes TCP and UDP listen sockets, and displays the associated IP address and port.

The information displayed for established TCP sessions includes the remote IP address, port, and session state. Raw IP protocol listen socket information is also displayed for protocols such as VRRP and ICMP6, which are configured to receive IP packets with the associated protocol number.

For information on filtering and saving command output, see the "Getting Started with AlliedWare Plus" Feature Overview and Configuration Guide.

Syntax

```
show ip sockets
```

Mode Privileged Exec

Usage Use this command to verify that the socket being used is opening correctly. If there is a local and remote endpoint, a connection is established with the ports indicated.

Note that this command does not display sockets that are used internally for exchanging data between the various processes that exist on the device and are involved in its operation and management. It only displays sockets that are present for the purposes of communicating with other external devices.

Example To display IP sockets currently present on the device, use the command:

```
awplus# show ip sockets
```

Output Figure 21-12: Example output from **show ip sockets**

```
Socket information

Not showing 40 local connections
Not showing 7 local listening ports

Typ Local Address           Remote Address          State
tcp 0.0.0.0:111             0.0.0.0:*               LISTEN
tcp 0.0.0.0:80              0.0.0.0:*               LISTEN
tcp 0.0.0.0:23              0.0.0.0:*               LISTEN
tcp 0.0.0.0:443             0.0.0.0:*               LISTEN
tcp 0.0.0.0:4743            0.0.0.0:*               LISTEN
tcp 0.0.0.0:873             0.0.0.0:*               LISTEN
tcp :::23                   :::*                    LISTEN
udp 0.0.0.0:111             0.0.0.0:*
udp 226.94.1.1:5405         0.0.0.0:*
udp 0.0.0.0:161             0.0.0.0:*
udp :::161                  :::*
raw 0.0.0.0:112             0.0.0.0:*               112
raw :::58                   :::*                    58
raw :::112                  :::*                    112
```

Table 21-1: Parameters in the output from **show ip sockets**

Parameter	Description
`Not showing <number> local connections`	This field refers to established sessions between processes internal to the device, that are used in its operation and management. These sessions are not displayed as they are not useful to the user. <number> is some positive integer.
`Not showing <number> local listening ports`	This field refers to listening sockets belonging to processes internal to the device, that are used in its operation and management. They are not available to receive data from other devices. These sessions are not displayed as they are not useful to the user. <number> is some positive integer.
`Typ`	This column displays the type of the socket. Possible values for this column are: `tcp` : IP Protocol 6 `udp` : IP Protocol 17 `raw` : Indicates that socket is for a non port-orientated protocol (i.e. a protocol other than TCP or UDP) where all packets of a specified IP protocol type are accepted. For raw socket entries the protocol type is indicated in subsequent columns.
`Local Address`	For TCP and UDP listening sockets this shows the destination IP address and destination TCP or UDP port number for which the socket will receive packets. The address and port are separated by ':'. If the socket will accept packets addressed to any of the device's IP addresses, the IP address will be 0.0.0.0 for IPv4 or :: for IPv6. For active TCP sessions the IP address will display which of the devices addresses the session was established with. For raw sockets this displays the IP address and IP protocol for which the socket will accept IP packets. The address and protocol are separated by ':'. If the socket will accept packets addressed to any of the device's IP addresses, the IP address will be 0.0.0.0 for IPv4 and :: for IPv6. IP Protocol assignments are described at:www.iana.org/assignments/protocol-numbers

Table 21-1: Parameters in the output from **show ip sockets** (cont.)

Parameter	Description
`Remote Address`	For TCP and UDP listening sockets this shows the source IP address (either IPv4 or IPv6) and source TCP or UDP port number for which the socket will accept packets. The address and port are separated by ':'. If the socket will accept packets addressed from any IP address, the IP address will be 0.0.0.0 for IPv4 . This is the usual case for a listening socket. Normally for a listen socket any source port will be accepted. This is indicated by ". For active TCP sessions the IP address will display the remote address and port the session was established with. For raw sockets the entry in this column will be 0.0.0.0: for IPv4 .

`State`	This column shows the state of the socket. For TCP sockets this shows the state of the TCP state machine. For UDP sockets this column is blank. For raw sockets it contains the IP protocol number. The possible TCP states are:
	`LISTEN`
	`SYN-SENT`
	`SYN-RECEIVED`
	`ESTABLISHED`
	`FIN-WAIT-1`
	`FIN-WAIT-2`
	`CLOSE-WAIT`
	`CLOSING`
	`LAST-ACK`
	`TIME-WAIT`
	`CLOSED`
	RFC793 contains the TCP state machine diagram with Section 3.2 describing each of the states.

show ip traffic

Overview Use this command to display statistics regarding IP traffic sent and received by all interfaces on the device, showing totals for IP and IPv6 and then broken down into sub-categories such as TCP, UDP, ICMP and their IPv6 equivalents when appropriate.

For information on filtering and saving command output, see the "Getting Started with AlliedWare Plus" Feature Overview and Configuration Guide.

Syntax

```
show ip traffic
```

Mode Privileged Exec

Example To display IP traffic statistics, use the command:

```
awplus# show ip traffic
```

Output Figure 21-13: Example output from the **show ip traffic** command

```
IP:
     261998 packets received
     261998 delivered
     261998 sent
     69721 multicast packets received
     69721 multicast packets sent
     23202841 bytes received
     23202841 bytes sent
     7669296 multicast bytes received
     7669296 multicast bytes sent
IPv6:
     28 packets discarded on transmit due to no route
ICMP6:
UDP6:
UDPLite6:
TCP:
     0 remote connections established
     40 local connections established
     7 remote listening ports
     7 local listening ports
     261 active connection openings
     247 passive connection openings
     14 connection attempts failed
     122535 segments received
     122535 segments transmitted
     14 resets transmitted
     227 TCP sockets finished time wait in fast timer
```

```
     155 delayed acks sent
     21187 headers predicted
     736 pure ACKs
     80497 pure ACKs predicted
UDP:
     139468 datagrams received
     139468 datagrams sent
UDPLite:
```

tcpdump

Overview Use this command to start a tcpdump, which gives the same output as the Unix-like **tcpdump** command to display TCP/IP traffic. Press `<ctrl> + c` to stop a running tcpdump.

Syntax
```
tcpdump <line>
```

Syntax (VRF-lite)
```
tcpdump [vrf <vrf-name>] <line>
```

Parameter	Description
<line>	Specify the dump options. For more information on the options for this placeholder see http://www.tcpdump.org/tcpdump_man.html
`vrf`	Apply the command to the specified VRF instance.
<vrf-name>	The name of the VRF instance.

Mode Privileged Exec

Example To start a tcpdump running to capture IP packets, enter the command:

```
awplus# tcpdump ip
```

Example (VRF-lite) To start a tcpdump on interface vlan2 associated with a VRF instance red, enter the command:

```
awplus# tcpdump vrf red vlan2
```

Output Figure 21-14: Example output from the **tcpdump** command

```
03:40:33.221337 IP 192.168.1.1 > 224.0.0.13: PIMv2, Hello,
length: 34
1 packets captured
2 packets received by filter
0 packets dropped by kernel
```

Related Commands debug ip packet interface

Command changes Version 5.4.6-2.1: VRF-lite support added.

traceroute

Overview Use this command to trace the route to the specified IPv4 host.

Syntax

```
traceroute {<ip-addr>|<hostname>}
```

Syntax (VRF-lite)

```
traceroute [vrf <vrf-name>] {<ip-addr>|<hostname>}
```

Parameter	Description
<ip-addr>	The destination IPv4 address. The IPv4 address uses the format A.B.C.D.
<hostname>	The destination hostname.
`vrf`	Apply the command to the specified VRF instance.
<vrf-name>	The name of the VRF instance.

Mode User Exec and Privileged Exec

Example

```
awplus# traceroute 10.10.0.5
```

Example (VRF-lite)

```
awplus# traceroute vrf red 192.168.0.1
```

Command changes Version 5.4.6-2.1: VRF-lite support added.

undebug ip packet interface

Overview This command applies the functionality of the no debug ip packet interface command.

22 Domain Name Service (DNS) Commands

Introduction

Overview

This chapter provides an alphabetical reference of commands used to configure Domain Name Service (DNS) features, including the following:

- DNS client
- DNS forwarding (DNS relay)
- Domain lists
- DDNS (Dynamic Domain Name System)

For more information about DNS and DDNS for AR-Series Firewalls, see the Domain Name System (DNS) for AlliedWare Plus AR-Series Firewalls Feature Overview and Configuration Guide.

Command List

- "clear ip dns forwarding cache" on page 703
- "ddns enable" on page 704
- "ddns-update-method" on page 705
- "ddns-update now" on page 706
- "debug ddns" on page 707
- "debug ip dns forwarding" on page 708
- "description (Domain List)" on page 709
- "domain (Domain List)" on page 710
- "host-name (DDNS)" on page 711
- "ip ddns-update-method" on page 712
- "ip dns forwarding" on page 713
- "ip dns forwarding cache" on page 714
- "ip dns forwarding dead-time" on page 715
- "ip dns forwarding domain-list" on page 716

- "ip dns forwarding retry" on page 717
- "ip dns forwarding source-interface" on page 718
- "ip dns forwarding timeout" on page 719
- "ip domain-list" on page 720
- "ip domain-lookup" on page 721
- "ip domain-name" on page 722
- "ip name-server" on page 723
- "ipv6 ddns-update-method" on page 725
- "password (DDNS)" on page 726
- "ppp ipcp dns" on page 727
- "ppp ipcp dns suffix-list" on page 729
- "retry-interval (DDNS)" on page 731
- "show ddns-update-method status" on page 732
- "show debugging ip dns forwarding" on page 733
- "show hosts" on page 734
- "show ip dns forwarding" on page 735
- "show ip dns forwarding cache" on page 736
- "show ip dns forwarding server" on page 738
- "show ip domain-list" on page 740
- "show ip domain-name" on page 741
- "show ip name-server" on page 742
- "suppress-ipv4-updates (DDNS)" on page 744
- "undebug (DDNS)" on page 745
- "update-interval (DDNS)" on page 746
- "update-url (DDNS)" on page 747
- "use-ipv4-for-ipv6-updates (DDNS)" on page 750
- "username (DDNS)" on page 751

clear ip dns forwarding cache

Overview Use this command to clear the DNS Relay name resolver cache.

When using VRF-lite, use this command to clear the DNS Relay name resolver cache for either the whole device or for a specific VRF instance.

Syntax
```
clear ip dns forwarding cache
```

Syntax (VRF-lite)
```
clear ip dns [vrf <name>|global] forwarding cache
```

Parameter	Description
`vrf`	Apply this command to the specified VRF instance.
<name>	The name of the specific VRF instance
`global`	When VRF-lite is configured, apply this command to the global routing and forwarding table.

Mode Privileged Exec

Examples To clear all cached data, use the command:

```
awplus# clear ip dns forwarding cache
```

Example (VRF-lite) To clear the cached data for VRF instance red, use the command:

```
awplus# clear ip dns vrf red forwarding cache
```

To clear the cached data for the default global VRF instance only, use the command:

```
awplus# clear ip dns global forwarding cache
```

Related Commands ip dns forwarding cache

Command changes Version 5.4.6-2.1: VRF-lite support added.

ddns enable

Overview Use this command to enable DDNS updates.

Use the **no** variant of this command to disable DDNS updates.

Syntax

```
ddns enable
no ddns enable
```

Default Disabled

Mode Global Configuration

Example To globally enable DDNS updates, use the commands:

```
awplus# configure terminal
awplus(config)# ddns enable
```

To globally disable DDNS updates, use the commands:

```
awplus# configure terminal
awplus(config)# no ddns enable
```

Related Commands ddns-update-method

Command changes Version 5.4.7-0.1: command added

ddns-update-method

Overview Use this command to create a new DDNS update method and enter DDNS Update Method Configuration mode.

Use the **no** variant of this command to remove a DDNS update method.

Syntax

```
ddns-update-method <method-name>
no ddns-update-method <method-name>
```

Parameter	Description
<method-name>	The name of the DDNS method.

Default None

Mode Global Configuration

Example To create a method named “dyndns”, use the commands:

```
awplus# configure terminal
awplus(config)# ddns-update-method dyndns
awplus(config-ddns-update-method)#
```

Related Commands

ddns enable

ddns-update now

debug ddns

host-name (DDNS)

ip ddns-update-method

ipv6 ddns-update-method

password (DDNS)

retry-interval (DDNS)

show ddns-update-method status

suppress-ipv4-updates (DDNS)

undebug (DDNS)

update-interval (DDNS)

update-url (DDNS)

use-ipv4-for-ipv6-updates (DDNS)

username (DDNS)

Command changes Version 5.4.7-0.1: command added

ddns-update now

Overview Use this command to manually update DDNS methods.

Syntax

```
ddns-update now
ddns-update method <method-name> now
```

Parameter	Description
<method-name>	The DDNS update method name to use for the manual update.

Default None

Mode Privileged Exec

Usage When no method name is entered, all DDNS update methods are updated. If a method name is specified, then only that method will update.

Example To manually update all DDNS update methods, use the command:

```
awplus# ddns-update now
```

To manually update the method “dyndns”, use the command:

```
awplus# ddns-update method dyndns now
```

Related Commands ddns-update-method

Command changes Version 5.4.7-0.1: command added

debug ddns

Overview Use this command to enable debugging for the DDNS process.

Use the **no** variant of this command to disable debugging for the DDNS process.

Syntax

```
debug ddns
no debug ddns
```

Default Disabled

Mode Privileged Exec

Example To enable debugging for the DDNS process, use the command:

```
awplus# debug ddns
```

To disable debugging for the DDNS process, use the command:

```
awplus# no debug ddns
```

Related Commands ddns-update-method

undebug (DDNS)

Command changes Version 5.4.7-0.1: command added

debug ip dns forwarding

Overview Use this command to enable DNS Relay debugging.

Use the **no** variant of this command to disable DNS Relay debugging.

Syntax

```
debug ip dns forwarding
no debug ip dns forwarding
```

Default DNS Relay debugging is disabled by default.

Mode Privileged Exec

Examples To enable DNS forwarding debugging, use the commands:

```
awplus# debug ip dns forwarding
```

To disable DNS forwarding debugging, use the commands:

```
awplus# no debug ip dns forwarding
```

Related Commands ip dns forwarding

show debugging ip dns forwarding

description (Domain List)

Overview Use this command to give a description to a domain-list.

Use the **no** variant of this command to delete the description.

Syntax

```
description <text>
no description
```

Parameter	Description
<text>	Description string, 128 characters maximum. The string may contain spaces.

Mode Domain List Mode

Usage When creating a domain-list, it is helpful to write a short description of what the list is to be used for.

Examples To add a description to a domain list:, use the commands:

```
awplus# configure terminal
awplus(config)# ip dns forwarding domain-list mydomains
awplus(config-domain-list)# description This is a useful description of my domain list
```

To delete the description, use the commands:

```
awplus# configure terminal
awplus(config)# ip dns forwarding domain-list mydomains
awplus(config-domain-list)# no description
```

Related Commands ip dns forwarding domain-list

domain (Domain List)

Overview Use this command to add a domain to a domain list.

Use the **no** variant of this command to delete the domain.

Syntax

```
domain <domain-string>
no domain <domain-string>
```

Parameter	Description
<domain-string>	• A domain name must only contain a-z, A-Z, 0-9, '-' (en-dash) and '.'(period) characters. • Each sub-section of the domain must not start or end with the '-' character. • Each sub-section must have no more than 64 characters including the '.'. • The last section must not have a '.' at the end. • The whole domain must be less than 254 characters long.

Mode Domain List Mode

Usage Domain lists are objects that contain unsorted lists of domain names. After a domain list has been created, you can use this command to add domains to the domain list. There is no limit on the number of domains that can be added to a domain list.

Examples To add the domain "acme-solutions.com" to a domain list, use the commands:

```
awplus# configure terminal
awplus(config)# ip dns forwarding domain-list acme-corporation
awplus(config-domain-list)# domain acme-solutions.com
```

To delete the domain, use the commands:

```
awplus# configure terminal
awplus(config)# ip dns forwarding domain-list acme-corporation
awplus(config-domain-list)# no domain acme-solutions.com
```

Related Commands ip dns forwarding domain-list

host-name (DDNS)

Overview Use this command to add a host name for the current DDNS update method.

NOTE: *A DDNS update method can only have one host name.*

Use the **no** variant of this command to remove the host name from the current DDNS update method.

Syntax

```
host-name <host-name>
no host-name
```

Parameter	Description
<host-name>	The name of the host to be configured in conjunction with the user name and password.

Default None

Mode DDNS Update Method Configuration

Example To add the host name “test.dyndns.org” for the DDNS update method “dyndns”, use the commands:

```
awplus# configure terminal
awplus(config)# ddns-update-method dyndns
awplus(config-ddns-update-mthod)# host-name test.dyndns.org
```

To remove the host name “test.dyndns.org” from the DDNS update method “dyndns”, use the commands:

```
awplus# configure terminal
awplus(config)# ddns-update-method dyndns
awplus(config-ddns-update-mthod)# no host-name
```

Related Commands ddns-update-method

Command changes Version 5.4.7-0.1: command added

ip ddns-update-method

Overview Use this command to enable an IPv4 interface to update DDNS with the specified DDNS update method.

Use the **no** variant of this command to disable an IPv4 interface to update DDNS with the specified DDNS update method.

Syntax

```
ip ddns-update-method <method-name>
no ip ddns-update-method <method-name>
```

Parameter	Description
<method-name>	A name given to a DDNS update method.

Default None

Mode Interface Configuration

Usage A DDNS update method cannot be attached to multiple interfaces, however multiple DDNS update methods can be assigned to the same interface.

Example To enable IPv4 DDNS updates for a DDNS update method named “dyndns” using interface eth1, use the commands:

```
awplus# configure terminal
awplus(config)# interface eth1
awplus(config-if)# ip ddns-update-method dyndns
```

To disable IPv4 DDNS updates for a DDNS update method named “dyndns” using interface eth1, use the commands:

```
awplus# configure terminal
awplus(config)# interface eth1
awplus(config-if)# no ip ddns-update-method dyndns
```

Related Commands ddns-update-method

Command changes Version 5.4.7-0.1: command added

ip dns forwarding

Overview Use this command to enable DNS Relay, the forwarding of incoming DNS queries for IP hostname-to-address translation.

Use the **no** variant of this command to disable the forwarding of incoming DNS queries for IP hostname-to-address translation.

Syntax

```
ip dns forwarding
no ip dns forwarding
```

Default The forwarding of incoming DNS query packets is disabled by default.

Mode Global Configuration

Usage DNS Relay requires that IP domain lookup is enabled. IP domain lookup is enabled by default, but if it has been disabled, you can re-enable it by using the command ip domain-lookup.

See the ip dns forwarding dead-time command used with this command.

NOTE: *When running VRF-lite, the DNS Relay functions will apply separately within each VRF instance.*

Examples To enable the forwarding of incoming DNS query packets, use the commands:

```
awplus# configure terminal
awplus(config)# ip dns forwarding
```

To disable the forwarding of incoming DNS query packets, use the commands:

```
awplus# configure terminal
awplus(config)# no ip dns forwarding
```

Related Commands

clear ip dns forwarding cache

debug ip dns forwarding

ip dns forwarding cache

ip dns forwarding dead-time

ip dns forwarding retry

ip dns forwarding source-interface

ip dns forwarding timeout

ip name-server

show ip dns forwarding

show ip dns forwarding cache

show ip dns forwarding server

ip dns forwarding cache

Overview Use this command to set the DNS Relay name resolver cache size and cache entry lifetime period. The DNS Relay name resolver cache stores the mappings between domain names and IP addresses.

Use the **no** variant of this command to set the default DNS Relay name resolver cache size and cache entry lifetime period.

Note that the lifetime period of the cache entry can be overwritten by the time-out period of the DNS reply from the DNS server if the time-out period of the DNS reply from the DNS server is smaller than the configured time-out period. The time-out period of the cache entry will only be used when the time-out period of the DNS reply from the DNS server is bigger than the time-out period configured on the device.

Syntax

```
ip dns forwarding cache [size <0-1000>] [timeout <60-3600>]
no ip dns forwarding cache [size|timeout]
```

Parameter	Description
<0-1000>	Number of entries in the DNS Relay name resolver cache.
<60-3600>	Timeout value in seconds. Note that when running VRF-lite the number of entries configured will apply to each VRF instance.

Default The default cache size is 0 (no entries) and the default lifetime is 1800 seconds.

Mode Global Configuration

Examples To set the cache size to `10` entries and the lifetime to `500` seconds, use the commands:

```
awplus# configure terminal
awplus(config)# ip dns forwarding cache size 10 time 500
```

To set the cache size to the default, use the commands:

```
awplus# configure terminal
awplus(config)# no ip dns forwarding cache size
```

Related Commands

clear ip dns forwarding cache

debug ip dns forwarding

ip dns forwarding

show ip dns forwarding

show ip dns forwarding cache

ip dns forwarding dead-time

Overview Use this command to set the time period in seconds when the device stops sending any DNS requests to an unresponsive server and all retries set using ip dns forwarding retry are used. This time period is the DNS forwarding dead-time. The device stops sending DNS requests at the DNS forwarding dead-time configured and when all of the retries are used.

Use the **no** variant of this command to restore the default DNS forwarding dead-time value of 3600 seconds.

Syntax

```
ip dns forwarding dead-time <60-43200>
no ip dns forwarding retry
```

Default The default time to stop sending DNS requests to an unresponsive server is 3600 seconds.

Mode Global Configuration

Usage See the ip dns forwarding retry command used with this command.

Examples To set the DNS forwarding retry count to 50 and to set the DNS forwarding dead-time to 1800 seconds, use the commands:

```
awplus# configure terminal
awplus(config)# ip dns forwarding dead-time 1800
awplus(config)# ip dns forwarding retry 50
```

To reset the DNS retry count to the default of 2 and the DNS forwarding dead-time to the default of 3600, use the commands:

```
awplus# configure terminal
awplus(config)# no ip dns forwarding dead-time
awplus(config)# no ip dns forwarding retry
```

Related Commands

debug ip dns forwarding

ip dns forwarding

ip dns forwarding retry

show ip dns forwarding

show ip dns forwarding server

ip dns forwarding domain-list

Overview Use this command to create a domain-list that can be used as a suffix-list for DNS lookups. This command puts the device into a new mode where subsequent commands can be entered. The new mode is "Domain List Configuration" mode.

Use the **no** variant of this command to delete the domain-list.

Syntax

```
ip dns forwarding domain-list <domain-list-name>
no ip dns forwarding domain-list <domain-list-name>
```

Parameter	Description
<domain-list-name>	Name of the list.

Mode Global Configuration

Usage The domain list can be used by features that need to match against domains. A domain list by itself does nothing; it must be attached to another feature to have functionality (like a prefix-list).For example, the domain list can be used as a suffix list on an DNS name-server. The DNS server can be either statically configured, or learned over a PPP connection.

Note that this command is separate from the **ip domain-list** command, which is used by DNS client to append a domain on to the end of a partial hostname to form a fully-qualified domain.

Examples To create a domain list to include domains that are internal to the company such as "engineering.acme" or "intranet.acme", use the commands:

```
awplus# configure terminal
awplus(config)# ip dns forwarding domain-list corporatedomains
awplus(config-domain-list)# description internal network domain
awplus(config-domain-list)# domain engineering.acme
awplus(config-domain-list)# domain intranet.acme
```

To delete the domain list, use the commands:

```
awplus# configure terminal
awplus(config)# no ip dns forwarding domain-list
corporatedomains
```

Related Commands

description (Domain List)

domain (Domain List)

ip dns forwarding retry

Overview Use this command to set the number of times DNS Relay will retry to forward DNS queries. The device stops sending DNS requests to an unresponsive server at the time set using the ip dns forwarding dead-time command and when all of the retries are used.

Use the **no** variant of this command to set the number of retries to the default of 2.

Syntax

```
ip dns forwarding retry <0-100>
no ip dns forwarding retry
```

Default The default number of retries is 2 DNS requests to an unresponsive server.

Mode Global Configuration

Usage See the ip dns forwarding dead-time command used with this command.

Examples To set the DNS forwarding retry count to `50` and to set the DNS forwarding dead-time to `1800` seconds, use the commands:

```
awplus# configure terminal
awplus(config)# ip dns forwarding retry 50
awplus(config)# ip dns forwarding dead-time 1800
```

To reset the DNS retry count to the default of `2` and the DNS forwarding dead-time to the default of `3600` seconds, use the commands:

```
awplus# configure terminal
awplus(config)# no ip dns forwarding retry
awplus(config)# no ip dns forwarding dead-time
```

Related Commands

debug ip dns forwarding

ip dns forwarding

ip dns forwarding dead-time

show ip dns forwarding

ip dns forwarding source-interface

Overview Use this command to set the interface to use for forwarding and receiving DNS queries.

Use the **no** variant of this command to unset the interface used for forwarding and receiving DNS queries.

Syntax

```
ip dns forwarding source-interface <interface-name>
no ip dns forwarding source-interface
```

Default The default is that no interface is set and the device selects the appropriate source IP address automatically.

Mode Global Configuration

Examples To set `vlan1` as the source interface for relayed DNS queries, use the commands:

```
awplus# configure terminal
awplus(config)# ip dns forwarding source-interface vlan1
```

To clear the source interface for relayed DNS queries, use the commands:

```
awplus# configure terminal
awplus(config)# no ip dns forwarding source-interface
```

Related Commands

debug ip dns forwarding

ip dns forwarding

show ip dns forwarding

ip dns forwarding timeout

Overview Use this command to set the time period for the DNS Relay to wait for a DNS response.

Use the **no** variant of this command to set the time period to wait for a DNS response to the default of 3 seconds.

Syntax

```
ip dns forwarding timeout <0-3600>
no ip dns forwarding timeout
```

Default The default timeout value is 3 seconds.

Mode Global Configuration

Examples To set the timeout value to 12 seconds, use the commands:

```
awplus# configure terminal
awplus(config)# ip dns forwarding timeout 12
```

To set the timeout value to the default of 3 seconds, use the commands:

```
awplus# configure terminal
awplus(config)# no ip dns forwarding timeout
```

Related Commands

debug ip dns forwarding

ip dns forwarding

show ip dns forwarding

ip domain-list

Overview This command adds a domain to the DNS list. Domains are appended to incomplete host names in DNS requests. Each domain in this list is tried in turn in DNS lookups. This list is ordered so that the first entry you create is checked first.

The **no** variant of this command deletes a domain from the list.

Syntax

```
ip domain-list <domain-name>
no ip domain-list <domain-name>
```

Parameter	Description
<domain-name>	Domain string, for example “company.com”.

Mode Global Configuration

Usage If there are no domains in the DNS list, then your device uses the domain specified with the ip domain-name command. If any domain exists in the DNS list, then the device does not use the domain set using the **ip domain-name** command.

Example To add the domain `example.net` to the DNS list, use the following commands:

```
awplus# configure terminal
awplus(config)# ip domain-list example.net
```

Related Commands

ip domain-lookup

ip domain-name

show ip domain-list

ip domain-lookup

Overview This command enables the DNS client on your device. This allows you to use domain names instead of IP addresses in commands. The DNS client resolves the domain name into an IP address by sending a DNS inquiry to a DNS server, specified with the ip name-server command.

The **no** variant of this command disables the DNS client. The client will not attempt to resolve domain names. You must use IP addresses to specify hosts in commands.

Syntax

```
ip domain-lookup
no ip domain-lookup
```

Mode Global Configuration

Usage The client is enabled by default. However, it does not attempt DNS inquiries unless there is a DNS server configured.

If you are using DNS Relay (see the command ip dns forwarding), you must have IP domain lookup enabled.

Examples To enable the DNS client on your device, use the following commands:

```
awplus# configure terminal
awplus(config)# ip domain-lookup
```

To disable the DNS client on your device, use the following commands:

```
awplus# configure terminal
awplus(config)# no ip domain-lookup
```

Related Commands

ip domain-list

ip domain-name

ip name-server

show hosts

show ip name-server

ip domain-name

Overview This command sets a default domain for the DNS. The DNS client appends this domain to incomplete host-names in DNS requests.

The **no** variant of this command removes the domain-name previously set by this command.

Syntax

```
ip domain-name <domain-name>
no ip domain-name <domain-name>
```

Mode Global Configuration

Usage If there are no domains in the DNS list (created using the ip domain-list command) then your device uses the domain specified with this command. If any domain exists in the DNS list, then the device does not use the domain configured with this command.

When your device is using its DHCP client for an interface, it can receive Option 15 from the DHCP server. This option replaces the domain name set with this command.

Example To configure the domain name, enter the following commands:

```
awplus# configure terminal
awplus(config)# ip domain-name company.com
```

Related Commands

ip domain-list

show ip domain-list

show ip domain-name

ip name-server

Overview This command adds IPv4 or IPv6 DNS server addresses. The DNS client on your device sends DNS queries to IP addresses in this list when trying to resolve a host name. Host names cannot be resolved until you have added at least one server to this list. A maximum of three name servers can be added to this list.

If you are running VRF-lite, you can add IPv4 or IPv6 DNS server addresses for either the global VRF instance or for a specific VRF instance. Host names cannot be resolved from within a VRF instance until you have added at least one name-server to that VRF instance.

The **no** variant of this command removes the specified DNS name-server address.

Syntax

```
ip name-server <ip-addr> [suffix-list <domain-list>]
no ip name-server <ip-addr> [suffix-list]
```

Syntax (VRF-lite)

```
ip name-server [vrf <name>] <ip-addr>
no ip name-server [vrf <name>] <ip-addr>
```

Parameter	Description
<ip-addr>	The IP address of the DNS server that is being added to the name server list. The address is entered in the form A.B.C.D for an IPv4 address, or in the form X:X::X:X for an IPv6 address.
`vrf`	Apply this command to the specified VRF instance.
<name>	The name of the specific VRF instance
`suffix-list`	Specify domain suffixes that should be directed to this name server
<domain-list>	The name of the DNS domain-list

Mode Global Configuration

Usage To allow the device to operate as a DNS proxy, your device must have learned about a DNS name-server to forward requests to. Name-servers can be learned through the following means:

- Manual configuration, using the **ip name-server** command
- Learned from DHCP server with Option 6
- Learned over a PPP tunnel if the neighbor advertises the DNS server

This command is used to statically configure a DNS name-server for the device to use.

For more information about PPP and DNS, see the PPP Feature Overview and Configuration Guide.

Examples

To allow a device to send DNS queries to a DNS server with the IPv4 address 10.10.10.5, use the commands:

```
awplus# configure terminal
awplus(config)# ip name-server 10.10.10.5
```

To enable your device to send DNS queries to a DNS server with the IPv6 address 2001:0db8:010d::1, use the commands:

```
awplus# configure terminal
awplus(config)# ip name-server 2001:0db8:010d::1
```

For DNS relay, to direct DNS lookups for domains with suffixes of "engineering.acme" or "intranet.acme" to an internal corporate name-server, use the commands:

```
awplus# configure terminal
awplus(config)# ip dns forwarding domain-list corporatedomains
awplus(config-domain-list)# description Our internal network
domains; do not send DNS requests to internet
awplus(config-domain-list)# domain engineering.acme
awplus(config-domain-list)# domain intranet.acme
awplus(config-domain-list)# exit
awplus(config)# ip name-server 172.16.0.1 suffix-list
corporatedomains
```

Example (VRF-lite)

To enable your switch to send DNS queries (on VRF instance RED) to a DNS server with the IPv4 address `10.10.10.5` use the commands:

```
awplus# configure terminal
awplus(config)# ip name-server vrf RED 10.10.10.5
```

Related Commands

ip domain-list

ip domain-lookup

ip domain-name

show ip dns forwarding cache

show ip name-server

Command changes

Version 5.4.6-2.1: VRF-lite support added.

ipv6 ddns-update-method

Overview Use this command to enable an IPv6 interface to update DDNS with the specified DDNS update method.

Use the **no** variant of this command to disable an IPv6 interface to update DDNS with the specified DDNS update method.

Syntax

```
ipv6 ddns-update-method <method-name>
no ipv6 ddns-update-method <method-name>
```

Parameter	Description
<method-name>	A name given to a DDNS update method.

Default None

Mode Interface Configuration

Usage A DDNS update method cannot be attached to multiple interfaces, however multiple DDNS update methods can be assigned to the same interface.

Example To enable IPv6 DDNS updates for a DDNS update method named “dyndns” using interface eth1, use the following commands:

```
awplus# configure terminal
awplus(config)# interface eth1
awplus(config-if)# ipv6 ddns-update-method dyndns
```

To disable IPv6 DDNS updates for a DDNS update method named “dyndns” using interface eth1, use the following commands:

```
awplus# configure terminal
awplus(config)# interface eth1
awplus(config-if)# no ipv6 ddns-update-method dyndns
```

Related Commands ddns-update-method

Command changes Version 5.4.7-0.1: command added

password (DDNS)

Overview Use this command to add a password to the current DDNS update method.

Use the **no** variant of this command to remove a password from the current DDNS update method.

Syntax

```
password <password>
no password
```

Parameter	Description
<password>	The password to be configured in conjunction with the user name and host name.

Default None

Mode DDNS Update Method Configuration

Example To configure the password “test” for the method “dyndns”, use the following commands:

```
awplus# configure terminal
awplus(config)# ddns-update-method dyndns
awplus(config-ddns-update-mthod)# password test
```

To remove the password “test” from the method “dyndns”, use the following commands:

```
awplus# configure terminal
awplus(config)# ddns-update-method dyndns
awplus(config-ddns-update-mthod)# no password
```

Related Commands ddns-update-method

Command changes Version 5.4.7-0.1: command added

ppp ipcp dns

Overview Use this command to configure the primary and secondary DNS (Domain Name System) IP addresses for IPCP (Internet Protocol Control Protocol) on a given PPP interface.

Use the **no** variant of this command to remove the primary and secondary DNS IP addresses for IPCP on a given PPP interface, and remove any optional parameters configured for DNS.

Syntax

```
ppp ipcp dns [<primary> [<secondary>]][required|reject|request]
no ppp ipcp dns
```

Parameter	Description
<primary>	Specify the primary DNS address for a given PPP interface to the peer.
<secondary>	Specify the secondary DNS address for a given PPP interface to the peer.
`required`	Request DNS addresses from the peer, and close the link if none is given.
`reject`	Reject negotiations with the peer (default).
`request`	Request DNS addresses from the peer.

Default By default no IPCP DNS server request is sent to the peer.

Mode Interface Configuration

Usage Use the optional parameters to configure PPP IPCP DNS options for accepting, rejecting or requesting DNS addresses from the peer. Use the optional primary and secondary or primary only DNS server address placeholders to specify DNS server addresses to the peer.

The no variant of this command also stops IPCP DNS request messages being sent to the peer.

Examples To configure the PPP interface `ppp0` to require a DNS IP address from the peer, and close the link if a DNS IP address is not given, enter the below commands:

```
awplus# configure terminal
awplus(config)# interface ppp0
awplus(config-if)# ppp ipcp dns required
```

To configure the PPP interface ppp0 to require a DNS IP address from the peer, enter the below commands:

```
awplus# configure terminal
awplus(config)# interface ppp0
awplus(config-if)# ppp ipcp dns request
```

To configure the PPP interface ppp0 to reject a DNS IP address from the peer, enter the below commands:

```
awplus# configure terminal
awplus(config)# interface ppp0
awplus(config-if)# ppp ipcp dns reject
```

To configure the PPP interface ppp0 to supply primary and secondary DNS server addresses to the peer, enter the below commands:

```
awplus# configure terminal
awplus(config)# interface ppp0
awplus(config-if)# ppp ipcp dns 10.1.1.2 10.1.1.3
```

To configure the PPP interface ppp0 to supply a primary but not a secondary DNS server address to the peer, enter the below commands:

```
awplus# configure terminal
awplus(config)# interface ppp0
awplus(config-if)# ppp ipcp dns 10.1.1.2
```

Related Commands

ip address negotiated

peer default ip address

peer neighbor-route

show running-config interface

ppp ipcp dns suffix-list

Overview Use this command to configure a suffix-list to be associated with DNS name-servers learned over the PPP connection.

Use the **no** variant of this command to remove the suffix-list.

Syntax

```
ppp ipcp dns suffix-list <domain-list-name>
no ppp ipcp dns suffix-list
```

Parameter	Description
<domain-list-name>	The name of the DNS domain-list

Mode Interface Configuration

Usage A PPP connection can be configured to learn DNS servers from the remote peer by using the command ppp ipcp dns command.

This command allows a user to associate a domain-list to be used to match against the suffixes of incoming DNS requests. For example, a customer branch office may have a router that is used to give remote-access to their head office, over which they learn the IP address of the head office's DNS server. A domain list can be created that contains a suffix used for services internal to that company, for example, "example.lc". This domain-list is associated as a suffix-list to the PPP connection. So when the PPP connection is completed with the head office, users at the branch office that browse to "intranet.example.lc" will have the DNS request forwarded to the DNS server learned over the PPP connection. Without having the suffix-list configured, the DNS request for "intranet.example.lc" would instead be sent to the primary DNS server, which is likely to be the branch office's ISP, and they will simply respond with a negative reply, because .example.lc is not a globally routable domain.

Examples At a branch office, to direct DNS lookups for domains with suffixes of "engineering.acme" or "intranet.acme" to an internal corporate name-server run at head-office that was learned over a PPP connection, use the commands:

```
awplus# configure terminal
awplus(config)# ip dns forwarding domain-list corporatedomains
host(config-domain-list)# description Our internal network
domains; do not send DNS requests to internet
host(config-domain-list)# domain engineering.acme
host(config-domain-list)# domain intranet.acme
awplus(config)# interface ppp0
awplus(config-if)# ppp ipcp dns required
awplus(config-if)# ppp ipcp dns suffix-list corporatedomains
```

Related Commands

ip dns forwarding domain-list

ppp ipcp dns

retry-interval (DDNS)

Overview Use this command to enable DDNS update retries. Retries are attempted after a DDNS update fails after the specified interval. If the DDNS update keeps failing, then no more than the specified maximum retries are attempted.

NOTE: *The retry interval is used for one DDNS update at one time, so if an update is not complete within the specified interval, an update will not begin until it has completed.*

Use the **no** variant of this command to disable DDNS update retires.

Syntax

```
retry-interval <1-3888000> maximum-retries <1-100>
no retry-interval
```

Parameter	Description
<1-3888000>	The retry interval in seconds (from 1 second to 4.5 days), after which a failed DDNS update will be retried.
<1-100>	The maximum number of times a retry is allowed.

Default Disabled

Mode DDNS Update Method Configuration

Usage If an update is triggered by another source, such as an IP address change or a manual update, then the retry counter will start again from the beginning.

Example To enable DDNS update retry attempts every hour up to 5 times for the method “dyndns”, use the commands:

```
awplus# configure terminal
awplus(config)# ddns-update-method dyndns
awplus(config-ddns-update-method)# retry-interval 3600
maximum-retries 5
```

To disable DDNS update retry attempts for the method “dyndns”, use the commands:

```
awplus# configure terminal
awplus(config)# ddns-update-method dyndns
awplus(config-ddns-update-method)# no retry-interval
```

Related Commands ddns-update-method

Command changes Version 5.4.7-0.1: command added

show ddns-update-method status

Overview Use this command to show the status of the configured DDNS update methods.

Syntax

```
show ddns-update-method status
```

Mode User Exec and Privileged Exec

Example To display the status of DDNS update methods currently configured on your device, use the command:

```
awplus# show ddns-update-method status
```

Output Figure 22-1: Example output from **show ddns-update-method status**

```
awplus#show ddns-update-method status

Dynamic DNS updates are disabled

------------------------------------------------------------------
Update Method Name    test
Hostname              test.dnsalias.org
IPv4 Interface        vlan1000
IPv4 Address          192.168.10.100
IPv4 Status           Update succeeded
IPv4 Update Result    good 192.168.10.100
IPv6 Interface        vlan1000
IPv6 Address          333::f195
IPv6 Status           Update succeeded
IPv6 Update Result    good 0333:0000:0000:0000:0000:0000:0000:f195
Last update           2017-02-23T00:09:07Z
```

Related Commands ddns-update-method

Command changes Version 5.4.7-0.1: command added

show debugging ip dns forwarding

Overview Use this command to display the DNS Relay debugging status. DNS Relay debugging is set using the **debug ip dns forwarding** command.

For information on filtering and saving command output, see the "Getting Started with AlliedWare Plus" Feature Overview and Configuration Guide.

Syntax

```
show debugging ip dns forwarding
```

Mode User Exec and Privileged Exec

Example To display the DNS Relay debugging status, use the command:

```
awplus# show debugging ip dns forwarding
```

Output Figure 22-2: Example output from the **show debugging ip dns forwarding** command

```
awplus#show debugging ip dns forwarding

DNS Relay debugging status:
  debugging is on
```

Related Commands debug ip dns forwarding

show hosts

Overview This command shows the default domain, domain list, and name servers configured on your device.

For information on filtering and saving command output, see the "Getting Started with AlliedWare Plus" Feature Overview and Configuration Guide.

Syntax

```
show hosts
```

Mode User Exec and Privileged Exec

Example To display the default domain, use the command:

```
awplus# show hosts
```

Output Figure 22-3: Example output from the **show hosts** command

```
awplus#show hosts

Default domain is mycompany.com
Domain list: company.com
Name/address lookup uses domain service
Name servers are 10.10.0.2 10.10.0.88
```

Related Commands

ip domain-list

ip domain-lookup

ip domain-name

ip name-server

show ip dns forwarding

Overview Use this command to display the DNS Relay status.

Syntax

```
show ip dns forwarding
```

Mode User Exec and Privileged Exec

Examples To display the DNS Relay status, use the command:

```
awplus# show ip dns forwarding
```

Output Figure 22-4: Example output from the **show ip dns forwarding** command

```
awplus#show ip dns forwarding

Max-Retry       : 2
Timeout         : 3 second(s)
Dead-Time       : 3600 second(s)
Source-Interface: not specified
DNS Cache       : disabled
```

Related Commands ip dns forwarding

show ip dns forwarding cache

Overview Use this command to display the DNS Relay name resolver cache.

Syntax
```
show ip dns forwarding cache
```

Syntax (VRF-lite)
```
show ip dns [vrf <name>|global] forwarding cache
```

Parameter	Description
`vrf`	Apply this command to the specified VRF instance.
<name>	The name of the specific VRF instance
`global`	When VRF-lite is configured, apply this command to the global routing and forwarding table.

Mode User Exec and Privileged Exec

Example To display the DNS Relay name resolver cache, use the command:

```
awplus# show ip dns forwarding cache
```

Output Figure 22-5: Example output from the **show ip dns forwarding cache** command

```
awplus#show ip dns forwarding cache

Host                                    Address                 Expires Flags
www.example.com                         172.16.1.1.                 180
mail.example.com                        www.example.com             180 CNAME
www.example.com                         172.16.1.1.                 180 REVERSE
mail.example.com                        172.16.1.5.                 180
```

Example (VRF-lite) To display the DNS Relay name resolver cache with output for VRF instance RED, use the command:

```
awplus# show ip dns vrf RED forwarding cache
```

Output Figure 22-6: Example output from the **show ip dns forwarding cache** command that includes output for VRF instance RED.

```
awplus#show ip dns vrf RED forwarding cache

Host                                    Address                 Expires Flags
www.example.com                         172.16.1.1.                 180
mail.example.com                        www.example.com             180 CNAME
www.example.com                         172.16.1.1.                 180 REVERSE
mail.example.com                        172.16.1.5.                 180

[VRF: RED]
www.example2.com                         10.25.1.1.                 180
mail.example2.com                        www.example2.com           180 CNAME
www.example2.com                         10.25.1.1.                 180 REVERSE
mail.example2.com                        10.25.1.6.                 180
```

Related Commands ip dns forwarding cache

ip name-server

Command changes Version 5.4.6-2.1: VRF-lite support added.

show ip dns forwarding server

Overview Use this command to display the status of DNS forwarding name servers.

If you are running VRF, you can also use this command to display the status for DNS forwarding name servers operating on a specific VRF instance.

Syntax
```
show ip dns forwarding server
```

Syntax (VRF-lite)
```
show ip dns [vrf <name>|global] forwarding server
```

Parameter	Description
`vrf`	Apply this command to the specified VRF instance.
<name>	The name of the specific VRF instance
`global`	When VRF-lite is configured, apply this command to the global routing and forwarding table.
`forwarding server`	Display information about the DNS forwarding name servers for either the switch (when not using VRF-lite) or for a specific VRF instance (when using VRF-lite).

Mode User Exec and Privileged Exec

Examples To display the status of DNS Relay name servers, use the command:

```
awplus# show ip dns forwarding server
```

Output Figure 22-7: Example output from the **show ip dns forwarding server** command

```
awplus#show ip dns forwarding server

Servers           Forwards      Fails    Dead-Time
172.16.1.1              12          0       active
172.16.1.2               6          3         3900
```

Example (VRF-lite) To display the status of DNS Relay name-servers for VRF-lite instance red, use the command:

```
awplus# show ip dns vrf red forwarding server
```

Output Figure 22-8: Example output from the **show ip dns forwarding** server command

```
awplus#show ip dns forwarding server

[VRF: red]
Servers           Forwards      Fails    Dead-Time
172.16.1.1              12          0       active
172.16.1.2               6          3         3900
```

Related Commands

ip dns forwarding

ip dns forwarding dead-time

Command changes

Version 5.4.6-2.1: VRF-lite support added.

show ip domain-list

Overview This command shows the domains configured in the domain list. The DNS client uses the domains in this list to append incomplete hostnames when sending a DNS inquiry to a DNS server.

For information on filtering and saving command output, see the "Getting Started with AlliedWare Plus" Feature Overview and Configuration Guide.

Syntax
```
show ip domain-list
```

Mode User Exec and Privileged Exec

Example To display the list of domains in the domain list, use the command:

```
awplus# show ip domain-list
```

Output Figure 22-9: Example output from the **show ip domain-list** command

```
awplus#show ip domain-list
alliedtelesis.com
mycompany.com
```

Related Commands ip domain-list

ip domain-lookup

show ip domain-name

Overview This command shows the default domain configured on your device. When there are no entries in the DNS list, the DNS client appends this domain to incomplete hostnames when sending a DNS inquiry to a DNS server.

For information on filtering and saving command output, see the "Getting Started with AlliedWare Plus" Feature Overview and Configuration Guide.

Syntax

```
show ip domain-name
```

Mode User Exec and Privileged Exec

Example To display the default domain configured on your device, use the command:

```
awplus# show ip domain-name
```

Output Figure 22-10: Example output from the **show ip domain-name** command

```
awplus#show ip domain-name
alliedtelesis.com
```

Related Commands

ip domain-name

ip domain-lookup

show ip name-server

Overview This command displays a list of IPv4 and IPv6 DNS server addresses that your device will send DNS requests to. This is a static list configured using the ip name-server command.

The command will also show any domain-list that has been associated as suffix-list with the DNS server, and the domains that will be preferentially directed to that DNS server.

When running VRF-lite, this command displays a list of IPv4 and IPv6 addresses of DNS servers that your device will send DNS requests to for either the global VRF instance or a selected VRF instance.

For information on filtering and saving command output, see the "Getting Started with AlliedWare Plus" Feature Overview and Configuration Guide.

Syntax
```
show ip name-server
```

Syntax (VRF-lite)
```
show ip name-server [vrf <name>|global]
```

Parameter	Description
`vrf`	A VRF instance
`<name>`	The name of the specific VRF instance
`global`	The global VRF instance

Mode User Exec and Privileged Exec

Example To display the list of DNS servers that your device sends DNS requests to, use the command:

```
awplus# show ip name-server
```

Output Figure 22-11: Example output from the **show ip name-server** command

```
awplus# show ip name-server
 10.10.0.123
 10.10.0.124
 2001:0db8:010d::1
```

Example To display the list of DNS servers that your device sends DNS requests to, use the command:

```
awplus# show ip name-server
```

Output Figure 22-12: Example output from the **show ip name-server** command

```
awplus#show ip name-server
Currently learned name-servers
10.36.200.165 dynamic (ppp0)
10.35.12.20 dynamic (ppp1), using suffix-list mysuffixlist:
        test.com
        intranet.interslice.com
10.37.84.97 static
130.37.84.97 static
```

Output (VRF-lite) Figure 22-13: Example output from the **show ip name-server** command for the VRF instance "red"

```
awplus# show ip name-server vrf red

[VRF: red]
 10.10.0.123
 10.10.0.124
 2001:0db8:010d::1
```

Related Commands

ip domain-lookup

ip name-server

Command changes Version 5.4.6-2.1: VRF-lite support added.

suppress-ipv4-updates (DDNS)

Overview Use this command to suppress IPv4 updates from being sent.

Use the **no** variant of this command to stop suppressing IPv4 updates from being sent.

Syntax

```
suppress-ipv4-updates
no suppress-ipv4-updates
```

Default Disabled

Mode DDNS Update Method Configuration

Usage This command is used in conjunction with the **use-ipv4-for-ipv6-updates** command. IPv4 DDNS updates are suppressed so that only IPv6 updates are sent.

NOTE: *The IPv4 DNS entry may be updated using the source IPv4 address used.*

Example To suppress IPv4 updates and send IPv6 updates instead for the method “dyndns”, use the commands:

```
awplus# configure terminal
awplus(config)# ddns-update-method-dyndns
awplus(config-ddns-update-method)# use-ipv4-for-ipv6-updates
awplus(config-ddns-update-method)# suppress-ipv4-updates
```

Related Commands ddns-update-method

use-ipv4-for-ipv6-updates (DDNS)

Command changes Version 5.4.7-0.1: command added

undebug (DDNS)

Overview Use this command to disable debugging for the DDNS process.

Syntax

```
undebug ddns
```

Default Disabled

Mode Privileged Exec

Example To disable debugging for the DDNS process, use the command:

```
awplus# undebug ddns
```

Related Commands ddns-update-method

debug ddns

Command changes Version 5.4.7-0.1: command added

update-interval (DDNS)

Overview Use this command to specify the time interval between periodic DDNS updates.

Use the **no** variant of this command to disable periodic DDNS updates.

Syntax

```
update-interval <1-64800>
no update-interval
```

Parameter	Description
<1-64800>	Update interval time in minutes (from 1 minute to 45 days).

Default Disabled

Mode DDNS Update Method Configuration

Examples To enable periodic DDNS updates every day for the method “dyndns”, use the commands:

```
awplus# configure terminal
awplus(config)# ddns-update-method dyndns
awplus(config-ddns-update-method)# update-interval 1440
```

To enable periodic DDNS updates every 28 days for the method “dyndns”, use the commands:

```
awplus# configure terminal
awplus(config)# ddns-update-method dyndns
awplus(config-ddns-update-method)# update-interval 40320
```

To disable periodic DDNS updates for the method “dyndns”, use the commands:

```
awplus# configure terminal
awplus(config)# ddns-update-method dyndns
awplus(config-ddns-update-method)# no update-interval
```

Related Commands ddns-update-method

Command changes Version 5.4.7-0.1: command added

update-url (DDNS)

Overview Use this command to configure a URL for DDNS updates for the current DDNS update method.

Use the **no** variant of this command to remove an update URL from a DDNS update method.

Syntax

```
update-url <url-name>
no update-url <url-name>
```

Parameter	Description
<url-name>	The update URL is provided by the DDNS provider and can be configured with the following placeholder tokens: • <USERNAME> • <PASSWORD> • <HOST-NAME> • <IPADDRESS> To specify the values for <USERNAME>, <PASSWORD> and <HOST-NAME>, use the commands **username, password** and **hostname**. The value for <IPADDRESS> is populated automatically from the interface IP settings.

Default None

Mode DDNS Update Method Configuration

Usage The update URL (provided by the DDNS provider) can include a user name, password, host name and/or IP address. These user values are optional because they may vary depending on the DDNS provider's update URLs. AlliedWare Plus requires you to enter the required parameters for the update URL using the following placeholder tokens:

- for the user name enter "<USERNAME>"
- for the password enter "<PASSWORD>"
- for the host name enter "<HOST-NAME>"
- for the IP address enter "<IPADDRESS>"

For example, for DynDNS the following update URL can be used:

```
http://username:password@members.dyndns.org/nic/update?
SYSTEM=dyndns&hostname=<h>&myip=<a>
```

To configure this URL, use the following command including the placeholder tokens as written here:

```
awplus(config-ddns-update-method)# update-url
http://<USERNAME>:<PASSWORD>@members.dyndns.org/nic/update?
SYSTEM=dyndns&hostname=<HOST-NAME>&myip=<IPADDRESS>
```

DynDNS also has the following update URL that can be used instead:

```
http://<USERNAME>:<PASSWORD>@members.dyndns.org/v3/update?
hostname=<HOST-NAME>&myip=<IPADDRESS>
```

NOTE: *URLs that contain the character "?" activate help from the command line. To stop the help from activating enter the "?" in the command line, then press Ctrl+v.*

For more information and examples, see the Domain Name System (DNS) for AlliedWare Plus AR-Series Firewalls Feature Overview and Configuration Guide.

Examples To use members.dyndns.org/nic/update as the update URL for the provider DynDNS, with the method called "dyndns" that uses HTTP, use the following commands:

```
awplus# configure terminal
awplus(config)# ddns-update-method dyndns
awplus(config-ddns-update-method)# update-url
http://<USERNAME>:<PASWORD>@members.dyndns.org/nic/update?
SYSTEM=dyndns&hostname=<HOST-NAME>&myip=<IPADDRESS>
```

To use members.dyndns.org/v3/update as the update URL for the provider DynDNS, with the method called "dyndns" that uses HTTP, use the following commands:

```
awplus# configure terminal
awplus(config)# ddns-update-method dyndns
awplus(config-ddns-update-method)# update-url
http://<USERNAME>:<PASSWORD>@members.dyndns.org/v3/update?
hostname=<HOST-NAME>&myip=<IPADDRESS>
```

To use members.dyndns.org/v3/update as the update URL for the provider DynDNS, with the method called "dyndns" that uses HTTPS/SSL, use the following commands:

```
awplus# configure terminal
awplus(config)# ddns-update-method dyndns
awplus(config-ddns-update-method)# update-url
https://<USERNAME>:<PASSWORD>@members.dyndns.org/v3/update?
hostname=<HOST-NAME>&myip=<IPADDRESS>
```

To use members.dyndns.org/v3/update as the update URL for the provider DynDNS, with the method called "dyndns" that uses HTTP on port 8245, use the following commands:

```
awplus# configure terminal
awplus(config)# ddns-update-method dyndns
awplus(config-ddns-update-method)# update-url
http://<USERNAME>:<PASSWORD>@members.dyndns.org:8245/v3/
update?hostname=<HOST-NAME>&myip=<IPADDRESS>
```

To remove the update URL from the method called “dyndns”, use the following commands:

```
awplus# configure terminal
awplus(config)# ddns-update-method dyndns
awplus(config-ddns-update-method)# no update-url
```

Related Commands ddns-update-method

Command changes Version 5.4.7-0.1: command added

use-ipv4-for-ipv6-updates (DDNS)

Overview Use this command to send IPv6 updates using IPv4.

Use the **no** variant of this command to stop sending IPv6 updates using IPv4.

Syntax

```
use-ipv4-for-ipv6-updates
no use-ipv4-for-ipv6-updates
```

Default Disabled

Mode DDNS Update Method Configuration

Usage If your DDNS provider supports IPv6 but does not support sending updates in IPv6 then this command is used so IPv6 updates can be sent using IPv4 instead. The **suppress-ipv4-updates** command is used in conjunction with this command to suppress IPv4 updates and send only IPv6 updates instead.

example To send IPv6 updates using IPv4 for the method “dyndns” and to suppress IPv4 updates, use the commands:

```
awplus# configure terminal
awplus(config)# ddns-update-method dyndns
awplus(config-ddns-update-method)# use-ipv4-for-ipv6-updates
awplus(config-ddns-update-method)# suppress-ipv4-updates
```

Related Commands ddns-update-method

suppress-ipv4-updates (DDNS)

Command changes Version 5.4.7-0.1: command added

username (DDNS)

Overview Use this command to add a user name to the current DDNS update method.

Use the **no** variant of this command to remove a user name from the current DDNS update method.

Syntax

```
username <user-name>
no username
```

Parameter	Description
<user-name>	The name of the user to be configured in conjunction with the password and host name.

Default None

Mode DDNS Update Method Configuration

Example To configure the username “atlnz” for the method “dyndns”, use the following commands:

```
awplus# configure terminal
awplus(config)# ddns-update-method dyndns
awplus(config-ddns-update-mthod)# username atlnz
```

To remove the username “atlnz” from the method “dyndns”, use the following commands:

```
awplus# configure terminal
awplus(config)# ddns-update-method dyndns
awplus(config-ddns-update-mthod)# no username
```

Related Commands ddns-update-method

Command changes Version 5.4.7-0.1: command added

23 IPv6 Commands

Introduction

Overview This chapter provides an alphabetical reference of commands used to configure IPv6. For more information, see the IPv6 Feature Overview and Configuration Guide.

Command List

- "clear ipv6 neighbors" on page 754
- "ipv6 address" on page 755
- "ipv6 address autoconfig" on page 757
- "ipv6 enable" on page 759
- "ipv6 eui64-linklocal" on page 761
- "ipv6 forwarding" on page 762
- "ipv6 multicast forward-slow-path-packet" on page 763
- "ipv6 nd accept-ra-pinfo" on page 764
- "ipv6 nd current-hoplimit" on page 765
- "ipv6 nd managed-config-flag" on page 767
- "ipv6 nd minimum-ra-interval" on page 768
- "ipv6 nd other-config-flag" on page 770
- "ipv6 nd prefix" on page 771
- "ipv6 nd ra-interval" on page 773
- "ipv6 nd ra-lifetime" on page 774
- "ipv6 nd reachable-time" on page 775
- "ipv6 nd retransmission-time" on page 777
- "ipv6 nd suppress-ra" on page 779
- "ipv6 neighbor" on page 780

- "ipv6 opportunistic-nd" on page 781
- "ipv6 route" on page 782
- "ipv6 unreachables" on page 783
- "ping ipv6" on page 784
- "show ipv6 forwarding" on page 785
- "show ipv6 interface brief" on page 786
- "show ipv6 neighbors" on page 787
- "show ipv6 route" on page 788
- "show ipv6 route summary" on page 790
- "traceroute ipv6" on page 791

clear ipv6 neighbors

Overview Use this command to clear all dynamic IPv6 neighbor entries.

Syntax
```
clear ipv6 neighbors
```

Mode Privileged Exec

Example
```
awplus# clear ipv6 neighbors
```

ipv6 address

Overview Use this command to set the IPv6 address of an interface. The command also enables IPv6 on the interface, which creates an EUI-64 link-local address as well as enabling RA processing and SLAAC.

To stop the device from processing prefix information (routes and addresses from the received Router Advertisements) use the command **no ipv6 nd accept-ra-pinfo**.

To remove the EUI-64 link-local address, use the command **no ipv6 eui64-linklocal**.

Use the **no** variant of this command to remove the IPv6 address assigned and disable IPv6. Note that if no global addresses are left after removing the IPv6 address then IPv6 is disabled.

Syntax

```
ipv6 address <ipv6-addr/prefix-length>
no ipv6 address <ipv6-addr/prefix-length>
```

Parameter	Description
<ipv6-addr/prefix-length>	Specifies the IPv6 address to be set. The IPv6 address uses the format X:X::X:X/Prefix-Length. The prefix-length is usually set between 0 and 64.

Mode Interface Configuration for a VLAN interface or a PPP interface.

Usage Note that link-local addresses are retained in the system until they are negated by using the **no** variant of the command that established them. See the ipv6 enable command for more information.

Also note that the link-local address is retained in the system if the global address is removed using another command, which was not used to establish the link-local address. For example, if a link local address is established with the ipv6 enable command then it will not be removed using a **no ipv6 address** command.

Examples To assign the IPv6 address 2001:0db8::a2/64 to the VLAN interface vlan2, use the following commands:

```
awplus# configure terminal
awplus(config)# interface vlan2
awplus(config-if)# ipv6 address 2001:0db8::a2/64
```

To remove the IPv6 address 2001:0db8::a2/64 from the VLAN interface vlan2, use the following commands:

```
awplus# configure terminal
awplus(config)# interface vlan2
awplus(config-if)# no ipv6 address 2001:0db8::a2/64
```

To assign the IPv6 address to the PPP interface ppp0, use the following commands:

```
awplus# configure terminal
awplus(config)# interface ppp0
awplus(config-fr-subif)# ipv6 address 2001:0db8::a2/64
```

To remove the IPv6 address 2001:0db8::a2/64 from the PPP interface ppp0, use the following commands:

```
awplus# configure terminal
awplus(config)# interface ppp0
awplus(config-if)# no ipv6 address 2001:0db8::a2/64
```

Related Commands

ipv6 address autoconfig

ipv6 address dhcp

ipv6 dhcp server

ipv6 enable

ipv6 eui64-linklocal

show running-config

show ipv6 interface brief

show ipv6 route

ipv6 address autoconfig

Overview Use this command to enable IPv6 stateless address autoconfiguration (SLAAC) for an interface. This configures an IPv6 address on an interface derived from the MAC address on the interface.

Use the **no** variant of this command to disable IPv6 SLAAC on an interface. Note that if no global addresses are left after removing all IPv6 autoconfigured addresses then IPv6 is disabled.

Syntax

```
ipv6 address autoconfig
no ipv6 address autoconfig
```

Mode Interface Configuration for a VLAN interface or a PPP interface.

Usage This command enables automatic configuration of IPv6 addresses using stateless autoconfiguration on an interface and enables IPv6, but does not enable IPv6 forwarding. See the ipv6 forwarding command for further description and examples.

IPv6 hosts can configure themselves when connected to an IPv6 network using ICMPv6 (Internet Control Message Protocol version 6) router discovery messages. Configured routers respond with a Router Advertisement (RA) containing configuration parameters for IPv6 hosts.

The SLAAC process derives the interface identifier of the IPv6 address from the MAC address of the interface. When applying SLAAC to an interface, note that the MAC address of the default VLAN is applied to the interface if the interface does not have its own MAC address.

If SLAAC is not suitable then a network can use stateful configuration with DHCPv6 (Dynamic Host Configuration Protocol version 6) Relay, or hosts can be configured statically. See ip dhcp-relay server-address for the DHCPv6 Relay server command description and examples. See the IP Feature Overview and Configuration Guide for more information about DNS Relay.

Note that link-local addresses are retained in the system until they are negated by using the no variant of the command that established them. See the ipv6 enable command for more information.

Also note that the link-local address is retained in the system if the global address is removed using another command that was not used to establish the link-local address. For example, if a link local address is established with the ipv6 enable command then it will not be removed using a **no ipv6 address** command.

Examples To enable SLAAC on the PPP interface `ppp0`, use the following commands:

```
awplus# configure terminal
awplus(config)# interface ppp0
awplus(config-if)# ipv6 address autoconfig
```

To disable SLAAC on the PPP interface ppp0, use the following commands:

```
awplus# configure terminal
awplus(config)# interface vlan2
awplus(config-if)# no ipv6 address autoconfig
```

Related Commands

ipv6 address

ipv6 enable

show ipv6 interface brief

show ipv6 route

show running-config

ipv6 enable

Overview Use this command to enable automatic configuration of a link-local IPv6 address on an interface using Stateless Automatic Address Configuration (SLAAC). By default, the EUI-64 method is used to generate the link-local address.

Use the **no** variant of this command to disable IPv6 on an interface without a global address. Note, to stop EUI-64 from generating the automatic link-local address, use the command **no ipv6 eui64-linklocal**.

Syntax

```
ipv6 enable
no ipv6 enable
```

Mode Interface Configuration for a VLAN interface or a PPP interface.

Usage The **ipv6 enable** command automatically configures an IPv6 link-local address on the interface and enables the interface for IPv6 processing.

A link-local address is an IP (Internet Protocol) address that is only used for communications in the local network, or for a point-to-point connection. Routing does not forward packets with link-local addresses. IPv6 requires that a link-local address is assigned to each interface that has the IPv6 protocol enabled, and when addresses are assigned to interfaces for routing IPv6 packets.

Note that link-local addresses are retained in the system until they are negated by using the no variant of the command that established them.

Also note that the link-local address is retained in the system if the global address is removed using another command that was not used to establish the link-local address. For example, if a link local address is established with the ipv6 enable command then it will not be removed using a **no ipv6 address** command.

Default All interfaces default to IPv6-down with no address.

Examples To enable IPv6 with only a link-local IPv6 address on the VLAN interface `vlan2`, use the following commands:

```
awplus# configure terminal
awplus(config)# interface vlan2
awplus(config-if)# ipv6 enable
```

To disable IPv6 with only a link-local IPv6 address on the VLAN interface `vlan2`, use the following commands:

```
awplus# configure terminal
awplus(config)# interface vlan2
awplus(config-if)# no ipv6 enable
```

To enable IPv6 with only a link-local IPv6 address on the PPP interface `ppp0`, use the following commands:

```
awplus# configure terminal
awplus(config)# interface ppp0
awplus(config-if)# ipv6 enable
```

To disable IPv6 with only a link-local IPv6 address on the PPP interface `ppp0`, use the following commands:

```
awplus# configure terminal
awplus(config)# interface ppp0
awplus(config-if)# no ipv6 enable
```

Related Commands

ipv6 address

ipv6 address autoconfig

ipv6 address dhcp

ipv6 address (DHCPv6 PD)

ipv6 dhcp client pd

ipv6 nd prefix

show ipv6 interface brief

show ipv6 route

show running-config

ipv6 eui64-linklocal

Overview When IPv6 is enabled on an interface, an EUI link-local address is generated and installed on the interface. In other words, **ipv6 eui64-linklocal** is enabled by default on any IPv6 enabled interface.

Use the **no** variant of this command to disallow the automatic generation of the EUI-64 link-local address on an IPv6 enabled interface.

Syntax

```
ipv6 eui64-linklocal
no ipv6 eui64-linklocal
```

Default The command **ipv6 eui64-linklocal** is enabled by default on any IPv6 enabled interface.

Mode Interface

Example To enable IPv6 on an interface eth1, and use the link-local address of fe80 : :1/10 instead of the EUI-64 link-local that is automatically generated, use the following commands:

```
awplus# configure terminal
awplus(config)# interface eth1
awplus(config-if)# ipv6 enable
awplus(config-if)# no ipv6 eui64-linklocal
awplus(config-if)# ipv6 address fe80::1/10
```

Related Commands

ipv6 address

ipv6 address autoconfig

ipv6 enable

Command changes Version 5.4.7-0.1: command added

ipv6 forwarding

Overview Use this command to turn on IPv6 unicast routing for IPv6 packet forwarding.

Execute this command globally on your device prior to issuing ipv6 enable on individual interfaces.

Use this **no** variant of this command to turn off IPv6 unicast routing. Note IPv6 unicast routing is disabled by default.

Syntax

```
ipv6 forwarding
no ipv6 forwarding
```

Mode Global Configuration

Default IPv6 unicast forwarding is disabled by default.

Usage Enable IPv6 unicast forwarding globally for all interface on your device with this command. Use the **no** variant of this command to disable IPv6 unicast forwarding globally for all interfaces on your device.

IPv6 unicast forwarding allows devices to communicate with devices that are more than one hop away, providing that there is a route to the destination address. If IPv6 forwarding is not enabled then pings to addresses on devices that are more than one hop away will fail, even if there is a route to the destination address.

Examples To enable IPv6 unicast routing, use this command as shown below:

```
awplus# configure terminal
awplus(config)# ipv6 forwarding
```

To disable IPv6 unicast routing, use the no variant of this command as shown below:

```
awplus# configure terminal
awplus(config)# no ipv6 forwarding
```

Related Commands ipv6 enable

ipv6 multicast-routing

ipv6 multicast forward-slow-path-packet

Overview Use this command to enable multicast packets to be forwarded to the CPU. Enabling this command will ensure that the layer L3 MTU is set correctly for each IP multicast group and will apply the value of the smallest MTU among the outgoing interfaces for the multicast group.

It will also ensure that a received packet that is larger than the MTU value will result in the generation of an ICMP Too Big message.

Use the **no** variant of this command to disable the above functionality.

Syntax

```
ipv6 multicast forward-slow-path-packet
no ipv6 multicast forward-slow-path-packet
```

Default Disabled.

Mode Privileged Exec

Example To enable the ipv6 multicast forward-slow-path-packet function, use the following commands:

```
awplus# configure terminal
awplus(config)# ip multicast forward-slow-path-packet
```

Related Commands show ipv6 forwarding

ipv6 nd accept-ra-pinfo

Overview Use this command to allow the processing of the prefix information included in a received RA (Router Advertisement) on an IPv6 enabled interface.

Use the **no** variant of this command to disable an IPv6 interface from using the prefix information within a received RA.

Syntax

```
ipv6 nd accept-ra-pinfo
no ipv6 nd accept-ra-pinfo
```

Default The command **ipv6 nd accept-ra-pinfo** is enabled by default on any IPv6 interface.

Mode Interface

Usage By default, when IPv6 is enabled on an interface, SLAAC is also enabled. SLAAC addressing along with the EUI-64 process, uses the prefix information included in a received RA to generate an automatic link-local address on the IPv6 interface.

Note, an AlliedWare Plus device will, by default, add a prefix for the connected interface IPv6 address(es) to the RA it transmits. However, this behavior can be changed by using the command **no ipv6 nd prefix auto-advertise**, so there is no guarantee that an RA will contain a prefix.

Example To enable IPv6 on eth1 without installing a SLAAC address on the interface, use the following commands:

```
awplus# configure terminal
awplus(config)# interface eth1
awplus(config-if)# ipv6 enable
awplus(config-if)# no ipv6 nd accept-ra-pinfo
```

Related Commands

ipv6 address

ipv6 address autoconfig

ipv6 enable

Command changes Version 5.4.7-0.1: command added

ipv6 nd current-hoplimit

Overview Use this command to specify the advertised current hop limit used between IPv6 Routers.

Use the **no** variant of this command to reset the current advertised hop limit to its default "0".

Syntax

```
ipv6 nd current-hoplimit <hoplimit>
no ipv6 nd current-hoplimit
```

Parameter	Description
<hoplimit>	Specifies the advertised current hop limit value. Valid values are from 0 to 255 hops.

Default 0 (No advertised current hop limit specified)

Mode Interface Configuration for a VLAN interface or a PPP interface.

Examples To set the advertised current hop limit to "2" between IPv6 Routers on the VLAN interface "vlan2", use the following commands:

```
awplus# configure terminal
awplus(config)# interface vlan2
awplus(config-if)# ipv6 nd current-hoplimit 2
```

To reset the advertised current hop limit to the default "0" on the VLAN interface "vlan2", use the following commands:

```
awplus# configure terminal
awplus(config)# interface vlan2
awplus(config-if)# no ipv6 nd current-hoplimit
```

To set the advertised current hop limit to "2" between IPv6 Routers on the PPP interface "ppp0", use the following commands:

```
awplus# configure terminal
awplus(config)# interface ppp0
awplus(config-if)# ipv6 nd current-hoplimit 2
```

To reset the advertised current hop limit to the default "0" on the PPP interface "ppp0", use the following commands:

```
awplus# configure terminal
awplus(config)# interface ppp0
awplus(config-if)# no ipv6 nd current-hoplimit
```

Related Commands

ipv6 nd managed-config-flag

ipv6 nd prefix

ipv6 nd suppress-ra

ipv6 nd managed-config-flag

Overview Use this command to set the managed address configuration flag, contained within the router advertisement field.

Setting this flag indicates the operation of a stateful autoconfiguration protocol such as DHCPv6 for address autoconfiguration, and that address information (i.e. the network prefix) and other (non-address) information can be requested from the device.

An unset flag enables hosts receiving the advertisements to use a stateless autoconfiguration mechanism to establish their IPv6 addresses. The default is flag unset.

Use the **no** variant of this command to reset this command to its default of, flag unset.

Syntax

```
ipv6 nd managed-config-flag
no ipv6 nd managed-config-flag
```

Default Unset

Mode Interface Configuration for a VLAN interface or a PPP interface.

Usage Advertisement flags will not be transmitted unless you have applied the ipv6 nd suppress-ra command. This step is included in the example below.

Example To set the managed address configuration flag on the VLAN interface `vlan2`, use the following commands:

```
awplus# configure terminal
awplus(config)# interface vlan2
awplus(config-if)# ipv6 nd managed-config-flag
awplus(config-if)# no ipv6 nd suppress-ra
```

To set the managed address configuration flag on the PPP interface `ppp0`, use the following commands:

```
awplus# configure terminal
awplus(config)# interface ppp0
awplus(config-if)# ipv6 nd managed-config-flag
awplus(config-if)# no ipv6 nd suppress-ra
```

Related Commands ipv6 nd suppress-ra

ipv6 nd prefix

ipv6 nd other-config-flag

ipv6 nd minimum-ra-interval

Overview Use this command in Interface Configuration mode to set a minimum Router Advertisement (RA) interval for a VLAN interface.

Use the **no** variant of this command in Interface Configuration mode to remove the minimum RA interval for a VLAN interface.

Syntax

```
ipv6 nd minimum-ra-interval <seconds>
no ipv6 nd minimum-ra-interval
```

Parameter	Description
<seconds>	Specifies the number of seconds between IPv6 Router Advertisements (RAs). Valid values are from 3 to 1350 seconds.

Default The RA interval for a VLAN interface is unset by default.

Mode Interface Configuration for a VLAN interface or a PPP interface.

Examples To set the minimum RA interval for the VLAN interface `vlan2`, use the following commands:

```
awplus# configure terminal
awplus(config)# interface vlan2
awplus(config-if)# ipv6 nd minimum-ra-interval 60
```

To remove the minimum RA interval for the VLAN interface `vlan2`, use the following commands:

```
awplus# configure terminal
awplus(config)# interface vlan2
awplus(config-if)# no ipv6 nd minimum-ra-interval
```

To set the minimum RA interval for the PPP interface `ppp0`, use the following commands:

```
awplus# configure terminal
awplus(config)# interface ppp0
awplus(config-if)# ipv6 nd minimum-ra-interval 60
```

To remove the minimum RA interval for the PPP interface `ppp0`, use the following commands:

```
awplus# configure terminal
awplus(config)# interface ppp0
awplus(config-if)# no ipv6 nd minimum-ra-interval
```

Related Commands

ipv6 nd ra-interval

ipv6 nd suppress-ra

ipv6 nd prefix

ipv6 nd other-config-flag

ipv6 nd other-config-flag

Overview Use this command to set the **other** stateful configuration flag (contained within the router advertisement field) to be used for IPv6 address auto-configuration. This flag is used to request the router to provide information in addition to providing addresses.

NOTE:

Setting the ipv6 nd managed-config-flag command implies that the ipv6 nd other-config-flag will also be set.

Use **no** variant of this command to reset the value to the default.

Syntax

```
ipv6 nd other-config-flag
no ipv6 nd other-config-flag
```

Default Unset

Mode Interface Configuration for a VLAN interface or a PPP interface.

Usage Advertisement flags will not be transmitted unless you have applied the ipv6 nd suppress-ra command. This step is included in the example below.

Example To set the IPv6 other-config-flag on the VLAN interface `vlan4`, use the following commands:

```
awplus# configure terminal
awplus(config)# interface vlan4
awplus(config-if)# ipv6 nd other-config-flag
awplus(config-if)# no ipv6 nd suppress-ra
```

To set the IPv6 other-config-flag on the PPP interface `ppp0`, use the following commands:

```
awplus# configure terminal
awplus(config)# interface ppp0
awplus(config-if)# ipv6 nd other-config-flag
awplus(config-if)# no ipv6 nd suppress-ra
```

Related Commands

ipv6 nd suppress-ra

ipv6 nd prefix

ipv6 nd managed-config-flag

ipv6 nd prefix

Overview Use this command in Interface Configuration mode for a VLAN interface to specify the IPv6 prefix information that is advertised by the router advertisement for IPv6 address auto-configuration.

Use the **no** parameter with this command to reset the IPv6 prefix for a VLAN interface in Interface Configuration mode.

Syntax

```
ipv6 nd prefix <ipv6-prefix/length>
ipv6 nd prefix <ipv6-prefix/length> [<valid-lifetime>]
ipv6 nd prefix <ipv6-prefix/length>
<valid-lifetime><preferred-lifetime> [no-autoconfig]
ipv6 nd prefix <ipv6-prefix/length>
<valid-lifetime><preferred-lifetime> off-link [no-autoconfig]
no ipv6 nd prefix [<ipv6-addr/prefix-length>|all]
```

Parameter	Description
<ipv6-prefix/length>	The prefix to be advertised by the router advertisement message. The IPv6 address prefix uses the format X:X::/prefix-length. The prefix-length is usually set between 0 and 64. The default is X:X::/64.
<valid-lifetime>	The the period during which the specified IPv6 address prefix is valid. This can be set to a value between 0 and 4294967295 seconds. The default is 2592000 (30 days). Note that this period should be set to a value greater than that set for the prefix preferred-lifetime.
<preferred-lifetime>	Specifies theIPv6 prefix preferred lifetime. This is the period during which the IPv6 address prefix is considered a current (undeprecated) value. After this period, the command is still valid but should not be used in new communications. Set to a value between 0 and 4294967295 seconds. The default is 604800 seconds (7 days). Note that this period should be set to a value less than that set for the prefix valid-lifetime.
`off-link`	Specify the IPv6 prefix off-link flag. The default is flag set.
`no-autoconfig`	Specify the IPv6 prefix no autoconfiguration flag. Setting this flag indicates that the prefix is not to be used for autoconfiguration. The default is flag set.
`all`	Specify all IPv6 prefixes associated with the VLAN interface.

Default Valid-lifetime default is 2592000 seconds (30 days). Preferred-lifetime default is 604800 seconds (7 days).

Mode Interface Configuration for a VLAN interface or a PPP interface.

Usage This command specifies the IPv6 prefix flags that are advertised by the router advertisement message.

Examples The following example configures the device to issue router advertisements on the VLAN interface vlan4, and advertises the address prefix of 2001:0db8::/64.

```
awplus# configure terminal
awplus(config)# interface vlan4
awplus(config-if)# ipv6 nd prefix 2001:0db8::/64
```

The following example configures the router to issue router advertisements on the PPP interface ppp0, and advertises the address prefix of 2001:0db8::/64.

```
awplus# configure terminal
awplus(config)# interface ppp0
awplus(config-if)# ipv6 nd prefix 2001:0db8::/64
```

The following example configures the device to issue router advertisements on the VLAN interface vlan4, and advertises the address prefix of 2001:0db8::/64 with a valid lifetime of 10 days and a preferred lifetime of 5 days.

```
awplus# configure terminal
awplus(config)# interface vlan4
awplus(config-if)# ipv6 nd prefix 2001:0db8::/64 864000 432000
```

The following example configures the device to issue router advertisements on the VLAN interface vlan4, and advertises the address prefix of 2001:0db8::/64 with a valid lifetime of 10 days, a preferred lifetime of 5 days and no prefix used for autoconfiguration.

```
awplus# configure terminal
awplus(config)# interface vlan4
awplus(config-if)# ipv6 nd prefix 2001:0db8::/64 864000 432000
no-autoconfig
```

The following example resets router advertisements on the VLAN interface vlan4, so the address prefix of 2001:0db8::/64 is not advertised from the device.

```
awplus# configure terminal
awplus(config)# interface vlan4
awplus(config-if)# no ipv6 nd prefix 2001:0db8::/64
```

The following example resets all router advertisements on the VLAN interface vlan4:

```
awplus# configure terminal
awplus(config)# interface vlan4
awplus(config-if)# no ipv6 nd prefix all
```

Related Commands ipv6 nd suppress-ra

ipv6 nd ra-interval

Overview Use this command to specify the interval between IPv6 Router Advertisements (RA) transmissions.

Use **no** parameter with this command to reset the value to the default value (600 seconds).

Syntax

```
ipv6 nd ra-interval <seconds>
no ipv6 nd ra-interval
```

Parameter	Description
<seconds>	Specifies the number of seconds between IPv6 Router Advertisements (RAs). Valid values are from 4 to 1800 seconds.

Default 600 seconds.

Mode Interface Configuration for a VLAN interface or a PPP interface.

Usage Advertisement flags will not be transmitted unless you have applied the ipv6 nd suppress-ra command as shown in the example below.

Example To set the advertisements interval on the VLAN interface "vlan4" to be 60 seconds, use the following commands:

```
awplus# configure terminal
awplus(config)# interface vlan4
awplus(config-if)# ipv6 nd ra-interval 60
awplus(config-if)# no ipv6 nd suppress-ra
```

Related Commands

ipv6 nd minimum-ra-interval

ipv6 nd suppress-ra

ipv6 nd prefix

ipv6 nd ra-lifetime

Overview Use this command to specify the time period that this router can usefully act as a default gateway for the network. Each router advertisement resets this time period.

Use **no** parameter with this command to reset the value to default.

Syntax

```
ipv6 nd ra-lifetime <seconds>
no ipv6 nd ra-lifetime
```

Default 1800 seconds

Mode Interface Configuration for a VLAN interface or a PPP interface.

Usage This command specifies the lifetime of the current router to be announced in IPv6 Router Advertisements.

Advertisement flags will not be transmitted unless you have applied the ipv6 nd suppress-ra command. This instruction is included in the example shown below.

Examples To set the advertisement lifetime of 8000 seconds on the VLAN interface `vlan4`, use the following commands:

```
awplus# configure terminal
awplus(config)# interface vlan4
awplus(config-if)# ipv6 nd ra-lifetime 8000
awplus(config-if)# no ipv6 nd suppress-ra
```

To set the advertisement lifetime of 8000 seconds on the PPP interface `ppp0`, use the following commands:

```
awplus# configure terminal
awplus(config)# interface ppp0
awplus(config-if)# ipv6 nd ra-lifetime 8000
awplus(config-if)# no ipv6 nd suppress-ra
```

Related Commands ipv6 nd suppress-ra

ipv6 nd prefix

ipv6 nd reachable-time

Overview Use this command to specify the reachable time in the router advertisement to be used for detecting reachability of the IPv6 neighbor.

Use the **no** variant of this command to reset the value to default.

Syntax

```
ipv6 nd reachable-time <milliseconds>
no ipv6 nd reachable-time
```

Default 0 milliseconds

Mode Interface Configuration for a VLAN interface or a PPP interface.

Usage This command specifies the reachable time of the current router to be announced in IPv6 Router Advertisements.

Advertisement flags will not be transmitted unless you have applied the ipv6 nd suppress-ra command. This instruction is included in the example shown below.

Example To set the reachable-time in router advertisements on the VLAN interface `vlan4` to be 1800000 milliseconds, enter the following commands:

```
awplus# configure terminal
awplus(config)# interface vlan4
awplus(config-if)# ipv6 nd reachable-time 1800000
awplus(config-if)# no ipv6 nd suppress-ra
```

To reset the reachable-time in router advertisements on the VLAN interface `vlan4` to an unspecified reachable-time (0 milliseconds), enter the following commands:

```
awplus# configure terminal
awplus(config)# interface vlan4
awplus(config-if)# no ipv6 nd reachable-time
```

To set the reachable-time in router advertisements on the PPP interface `ppp0` to be 1800000 milliseconds, enter the following commands:

```
awplus# configure terminal
awplus(config)# interface ppp0
awplus(config-if)# ipv6 nd reachable-time 1800000
awplus(config-if)# no ipv6 nd suppress-ra
```

To reset the reachable-time in router advertisements on the PPP interface `ppp0` to an unspecified reachable-time (0 milliseconds), enter the following commands:

```
awplus# configure terminal
awplus(config)# interface ppp0
awplus(config-if)# no ipv6 nd reachable-time
```

Related Commands

ipv6 nd suppress-ra

ipv6 nd prefix

ipv6 nd retransmission-time

Overview Use this command to specify the advertised retransmission interval for Neighbor Solicitation in milliseconds between IPv6 Routers.

Use the **no** variant of this command to reset the retransmission time to the default (1 second).

Syntax

```
ipv6 nd retransmission-time <milliseconds>
no ipv6 nd retransmission-time
```

Parameter	Description
<milliseconds>	Time period in milliseconds. Valid values are from 1000 to 3600000.

Default 1000 milliseconds (1 second)

Mode Interface Configuration for a VLAN interface or a PPP interface.

Examples To set the retransmission-time of Neighbor Solicitation on the VLAN interface `vlan2` to be 800000 milliseconds, enter the following commands:

```
awplus# configure terminal
awplus(config)# interface vlan2
awplus(config-if)# ipv6 nd retransmission-time 800000
```

To reset the retransmission-time of Neighbor Solicitation on the VLAN interface `vlan2` to the default 1000 milliseconds (1 second), enter the following commands:

```
awplus# configure terminal
awplus(config)# interface vlan2
awplus(config-if)# no ipv6 nd retransmission-time
```

To set the retransmission-time of Neighbor Solicitation on the PPP interface `ppp0` to be 800000 milliseconds, enter the following commands:

```
awplus# configure terminal
awplus(config)# interface ppp0
awplus(config-if)# ipv6 nd retransmission-time 800000
```

To reset the retransmission-time of Neighbor Solicitation on the PPP interface `ppp0` to the default 1000 milliseconds (1 second), enter the following commands:

```
awplus# configure terminal
awplus(config)# interface ppp0
awplus(config-if)# no ipv6 nd retransmission-time
```

Related Commands

ipv6 nd suppress-ra

ipv6 nd prefix

ipv6 nd suppress-ra

Overview Use this command to inhibit IPv6 Router Advertisement (RA) transmission for the current interface. Router advertisements are used when applying IPv6 stateless auto-configuration.

Use **no** parameter with this command to enable Router Advertisement transmission.

Syntax

```
ipv6 nd suppress-ra
no ipv6 nd suppress-ra
```

Default Router Advertisement (RA) transmission is suppressed by default.

Mode Interface Configuration for a VLAN interface or a PPP interface.

Example To enable the transmission of router advertisements from the VLAN interface `vlan4` on the device, use the following commands:

```
awplus# configure terminal
awplus(config)# interface vlan4
awplus(config-if)# no ipv6 nd suppress-ra
```

To enable the transmission of router advertisements from the PPP interface `ppp0` on the router, use the following commands:

```
awplus# configure terminal
awplus(config)# interface ppp0
awplus(config-if)# no ipv6 nd suppress-ra
```

Related Commands ipv6 nd ra-interval

ipv6 nd prefix

ipv6 neighbor

Overview Use this command to add a static IPv6 neighbor entry.

Use the **no** variant of this command to remove a specific IPv6 neighbor entry.

Syntax

```
ipv6 neighbor <ipv6-address> <vlan-name> <mac-address>
<port-list>
```

```
no ipv6 neighbor <ipv6-address> <vlan-name> <port-list>
```

Parameter	Description
<ipv6-address>	Specify the neighbor's IPv6 address in the format X:X::X:X.
<vlan-name>	Specify the neighbor's VLAN name.
<mac-address>	Specify the MAC hardware address in hexadecimal notation in the format `HHHH.HHHH.HHHH`.
<port-list>	Specify the port number, or port range.

Mode Global Configuration

Usage Use this command to clear a specific IPv6 neighbor entry. To clear all dynamic address entries, use the clear ipv6 neighbors command.

Example To create a static neighbor entry for IPv6 address 2001:0db8::a2, on vlan 4, MAC address 0000.cd28.0880, on port1.0.6, use the command:

```
awplus# configure terminal
```

```
awplus(config)# ipv6 neighbor 2001:0db8::a2 vlan4
0000.cd28.0880 port1.0.6
```

Related Commands clear ipv6 neighbors

ipv6 opportunistic-nd

Overview Use this command to enable opportunistic neighbor discovery for the global IPv6 ND cache. Opportunistic neighbor discovery changes the behavior for unsolicited ICMPv6 ND packet forwarding on the device.

Use the **no** variant of this command to disable opportunistic neighbor discovery for the global IPv6 ND cache.

Syntax

```
ipv6 opportunistic-nd
no ipv6 opportunistic-nd
```

Default Opportunistic neighbor discovery is disabled by default.

Mode Global Configuration

Usage When opportunistic neighbor discovery is enabled, the device will reply to any received unsolicited ICMPv6 ND packets. The source MAC address for the unsolicited ICMPv6 ND packet is added to the IPv6 ND cache, so the device forwards the ICMPv6 ND packet. When opportunistic neighbor discovery is disabled, the source MAC address for the ICMPv6 packet is not added to the IPv6 ND cache, so the ICMPv6 ND packet is not forwarded by the device.

Examples To enable opportunistic neighbor discovery for the IPv6 ND cache, enter:

```
awplus# configure terminal
awplus(config)# ipv6 opportunistic-nd
```

To disable opportunistic neighbor discovery for the IPv6 ND cache, enter:

```
awplus# configure terminal
awplus(config)# no ipv6 opportunistic-nd
```

Related Commands

arp opportunistic-nd

show ipv6 neighbors

show running-config interface

ipv6 route

Overview This command adds a static IPv6 route to the Routing Information Base (RIB). If this route is the best route for the destination, then your device adds it to the Forwarding Information Base (FIB). Your device uses the FIB to advertise routes to neighbors and forward packets.

The **no** variant of this command removes the static route.

Syntax

```
ipv6 route <dest-prefix> <dest-prefix/length>
{<gateway-ip>|<gateway-name>} [<distvalue>]
```

```
no ipv6 route <dest-prefix> <dest-prefix/length>
{<gateway-ip>|<gateway-name>} [<distvalue>]
```

Parameter	Description
<dest-prefix/length>	Specifies the IP destination prefix. The IPv6 address prefix uses the format X:X::/prefix-length. The prefix-length is usually set between 0 and 64.
<gateway-ip>	Specifies the IP gateway (or next hop) address. The IPv6 address uses the format X:X::X:X/Prefix-Length. The prefix-length is usually set between 0 and 64.
<gateway-name>	Specifies the name of the gateway (or next hop) interface.
<distvalue>	Specifies the administrative distance for the route. Valid values are from 1 to 255.

Mode Global Configuration

Usage Administrative distance can be modified so static routes do not take priority over other routes.

Example

```
awplus# configure terminal
awplus(config)# ipv6 route 2001:0db8::1/128 vlan2 32
```

Validation Commands show running-config

show ipv6 route

ipv6 unreachables

Overview Use this command to enable ICMPv6 (Internet Control Message Protocol version 6) type 1, destination unreachable, messages.

Use the **no** variant of this command to disable destination unreachable messages. This prevents an attacker from using these messages to discover the topology of a network.

Syntax

```
ipv6 unreachables
no ipv6 unreachables
```

Default Destination unreachable messages are enabled by default.

Mode Global Configuration

Usage When a device receives a packet for a destination that is unreachable it returns an ICMPv6 type 1 message. This message includes a reason code, as per the table below. An attacker can use these messages to obtain information regarding the topology of a network. Disabling destination unreachable messages, using the **no ipv6 unreachables** command, secures your network against this type of probing.

NOTE: *Disabling ICMPv6 destination unreachable messages breaks applications such as traceroute, which depend on these messages to operate correctly.*

Table 23-1: ICMPv6 type 1 reason codes and description

Code	Description [RFC]
0	No route to destination [RFC4443]
1	Communication with destination administratively prohibited [RFC4443]
2	Beyond scope of source address [RFC4443]
3	Address unreachable [RF4443]
4	Port unreachable [RFC4443]
5	Source address failed ingress/egress policy [RFC4443]
6	Reject route to destination [RFC4443
7	Error in Source Routing Header [RFC6554]

Example To disable destination unreachable messages, use the commands

```
awplus# configure terminal
awplus(config)# no ipv6 unreachables
```

To enable destination unreachable messages, use the commands

```
awplus# configure terminal
awplus(config)# ipv6 unreachables
```

ping ipv6

Overview This command sends a query to another IPv6 host (send Echo Request messages).

Syntax

```
ping ipv6 {<host>|<ipv6-address>} [repeat
{<1-2147483647>|continuous}] [size <10-1452>] [interface
<interface-list>] [timeout <1-65535>]
```

Parameter	Description
<ipv6-addr>	The destination IPv6 address. The IPv6 address uses the format X:X::X:X.
<hostname>	The destination hostname.
repeat	Specify the number of ping packets to send.
<1-2147483647>	Specify repeat count. The default is 5.
size *<10-1452>*	The number of data bytes to send, excluding the 8 byte ICMP header. The default is 56 (64 ICMP data bytes).
interface *<interface-list>*	The interface or range of configured IP interfaces to use as the source in the IP header of the ping packet. You can only specify the interface when pinging a link local address.
timeout *<1-65535>*	The time in seconds to wait for echo replies if the ARP entry is present, before reporting that no reply was received. If no ARP entry is present, it does not wait.
repeat	Specify the number of ping packets to send.
<1-2147483647>	Specify repeat count. The default is 5.
continuous	Continuous ping.
size *<10-1452>*	The number of data bytes to send, excluding the 8 byte ICMP header. The default is 56 (64 ICMP data bytes).
timeout *<1-65535>*	The time in seconds to wait for echo replies if the ARP entry is present, before reporting that no reply was received. If no ARP entry is present, it does not wait.

Mode User Exec and Privileged Exec

Example

```
awplus# ping ipv6 2001:0db8::a2
```

Related Commands traceroute ipv6

show ipv6 forwarding

Overview Use this command to display IPv6 forwarding status.

Syntax

```
show ipv6 forwarding
```

Mode User Exec and Privileged Exec

Example

```
awplus# show ipv6 forwarding
```

Output Figure 23-1: Example output from the **show ipv6 forwarding** command

```
ipv6 forwarding is on
```

show ipv6 interface brief

Overview Use this command to display brief information about interfaces and the IPv6 address assigned to them.

For information on filtering and saving command output, see the "Getting Started with AlliedWare Plus" Feature Overview and Configuration Guide.

Syntax

```
show ipv6 interface [brief]
```

Parameter	Description
`brief`	Specify this optional parameter to display brief IPv6 interface information.

Mode User Exec and Privileged Exec

Examples

```
awplus# show ipv6 interface brief
```

Output Figure 23-2: Example output from the **show ipv6 interface brief** command

```
awplus#show ipv6 interface brief
Interface     IPv6-Address                                Status      Protocol
lo            unassigned                                  admin up    running
vlan1         2001:db8::1/48                              admin up    down
              fe80::215:77ff:fee9:5c50/64
```

Related Commands show interface brief

show ipv6 neighbors

Overview Use this command to display all IPv6 neighbors.

For information on filtering and saving command output, see the "Getting Started with AlliedWare Plus" Feature Overview and Configuration Guide.

Syntax

```
show ipv6 neighbors
```

Mode User Exec and Privileged Exec

show ipv6 route

Overview Use this command to display the IPv6 routing table for a protocol or from a particular table.

For information on filtering and saving command output, see the "Getting Started with AlliedWare Plus" Feature Overview and Configuration Guide.

Syntax

```
show ipv6 route
[connected|database|ospf|rip|static|summary|<ipv6-address>|
<ipv6-addr/prefix-length>)]
```

Parameter	Description
`connected`	Displays only the routes learned from connected interfaces.
`database`	Displays only the IPv6 routing information extracted from the database.
`ospf`	Displays only the routes learned from IPv6 Open Shortest Path First (OSPFv3).
`rip`	Displays only the routes learned from IPv6 Routing Information Protocol (RIPng).
`static`	Displays only the IPv6 static routes you have configured.
`summary`	Displays summary information from the IPv6 routing table.
<ipv6-address>	Displays the routes for the specified address in the IP routing table. The IPv6 address uses the format X:X::X:X/Prefix-Length. The prefix-length is usually set between 0 and 64.
<ipv6-prefix/length>	Displays only the routes for the specified IP prefix.

Mode User Exec and Privileged Exec

Example 1 To display an IP route with all parameters turned on, use the following command:

```
awplus# show ipv6 route
```

Output Figure 23-3: Example output of the **show ipv6 route** command

```
IPv6 Routing Table
Codes: C - connected, S - static, R - RIP, O - OSPF, B - BGP
S   ::/0 [1/0] via 2001::a:0:0:c0a8:a6, vlan10
C   2001:db8::a:0:0:0:0/64 via ::, vlan10
C   2001:db8::14:0:0:0:0/64 via ::, vlan20
C   2001:db8::0:0:0:0/64 via ::, vlan30
C   2001:db8::28:0:0:0:0/64 via ::, vlan40
C   2001:db8::fa:0:0:0:0/64 via ::, vlan250
C   2001:db8::/64 via ::, vlan250
C   2001:db8::/64 via ::, vlan40
C   2001:db8::/64 via ::, vlan20
C   2001:db8::/64 via ::, vlan10
```

Example 2 To display all database entries for an IP route, use the following command:

```
awplus# show ipv6 route database
```

Output Figure 23-4: Example output of the **show ipv6 route database** command

```
IPv6 Routing Table
Codes: C - connected, S - static, R - RIP, O - OSPF, B - BGP
> - selected route, * - FIB route, p - stale info
Timers: Uptime

S   ::/0 [1/0] via 2001::a:0:0:c0a8:a01 inactive, 6d22h12m
         [1/0] via 2001::fa:0:0:c0a8:fa01 inactive, 6d22h12m
```

show ipv6 route summary

Overview Use this command to display the summary of the current NSM RIB entries.

For information on filtering and saving command output, see the "Getting Started with AlliedWare Plus" Feature Overview and Configuration Guide.

Syntax

```
show ipv6 route summary
```

Mode User Exec and Privileged Exec

Example To display IP route summary, use the following command:

```
awplus# show ipv6 route summary
```

Output Figure 23-5: Example output from the **show ipv6 route summary** command

```
IPv6 routing table name is Default-IPv6-Routing-Table(0)
IPv6 routing table maximum-paths is 4
RouteSource     Networks
connected       4
rip             5
Total           9
FIB             5
```

Related Commands show ip route database

traceroute ipv6

Overview Use this command to trace the route to the specified IPv6 host.

Syntax

```
traceroute ipv6 {<ipv6-addr>|<hostname>}
```

Parameter	Description
<ipv6-addr>	The destination IPv6 address. The IPv6 address uses the format X:X::X:X.
<hostname>	The destination hostname.

Mode User Exec and Privileged Exec

Example To run a traceroute for the IPv6 address 2001:0db8::a2, use the following command:

```
awplus# traceroute ipv6 2001:0db8::a2
```

Related Commands ping ipv6

24 Routing Commands

Introduction

Overview This chapter provides an alphabetical reference of routing commands that are common across the routing IP protocols. For more information, see the Route Selection Feature Overview and Configuration Guide.

Command List

- "ip route" on page 793
- "ipv6 route" on page 796
- "max-fib-routes" on page 797
- "max-static-routes" on page 799
- "maximum-paths" on page 800
- "show ip route" on page 801
- "show ip route database" on page 804
- "show ip route summary" on page 807
- "show ipv6 route" on page 809
- "show ipv6 route summary" on page 811

ip route

Overview This command adds a static route to the Routing Information Base (RIB). If this route is the best route for the destination, then your device adds it to the Forwarding Information Base (FIB). Your device uses the FIB to advertise routes to neighbors and forward packets.

When using VRF (Virtual Routing and Forwarding), you can use this command to configure a static inter-VRF route to a destination network that is reachable by a remote gateway located in a different VRF instance. Note that to apply the command in this way, the ip route static inter-vrf command must be in enabled (its default condition). For more information about VRF, see the VRF Feature Overview and Configuration Guide and the VRF-lite Commands chapter.

The **no** variant of this command removes the static route from the RIB and FIB.

Syntax

```
ip route <subnet&mask> {<gateway-ip>|<interface>} [<distance>]
no ip route <subnet&mask> {<gateway-ip>|<interface>}
[<distance>]
```

Syntax (VRF-lite)

```
ip route [vrf <vrf-name>] <subnet&mask> [<gateway-ip>]
[<interface>] [<distance>]
no ip route [vrf <vrf-name>] <subnet&mask> [<gateway-ip>]
[<interface>] [<distance>]
```

Parameter	Description
<subnet&mask>	The IPv4 address of the destination subnet defined using either a prefix length or a separate mask specified in one of the following formats: • The IPv4 subnet address in dotted decimal notation followed by the subnet mask, also in dotted decimal notation. • The IPv4 subnet address in dotted decimal notation, followed by a forward slash, then the prefix length
<gateway-ip>	The IPv4 address of the gateway device.
<interface>	The interface that connects your device to the network. Enter the name of the VLAN or its VID. You can also enter 'null' as an interface. Specify a 'null' interface to add a null or blackhole route to the switch. The gateway IP address or the interface is required if VRF-lite is not configured. If VRF-lite is configured: When adding a static intra-VRF route, you must specify either the gateway IP address or the interface. When adding a static inter-VRF route, you must specify both the gateway IP address and the interface.
<distance>	The administrative distance for the static route in the range <1-255>. Static routes by default have an administrative distance of 1.

Parameter	Description
`vrf`	Applies the command to the specified VRF instance.
<vrf-name>	The name of the VRF instance to enter IPv4 Address-Family mode for.

Mode Global Configuration

Default The default administrative distance for a static route is 1 for priority over non-static routes.

Usage Administrative distance can be modified so that static routes do not take priority over other routes.

Specify a 'Null' interface to add a null or blackhole route to the switch. A null or blackhole route is a routing table entry that does not forward packets, so any packets sent to it are dropped.

Examples To add the destination 192.168.3.0 with the mask 255.255.255.0 as a static route available through the device at "10.10.0.2" with the default administrative distance, use the commands:

```
awplus# configure terminal
awplus(config)# ip route 192.168.3.0 255.255.255.0 10.10.0.2
```

To remove the destination 192.168.3.0 with the mask 255.255.255.0 as a static route available through the device at "10.10.0.2" with the default administrative distance, use the commands:

```
awplus# configure terminal
awplus(config)# no ip route 192.168.3.0 255.255.255.0 10.10.0.2
```

To specify a null or blackhole route 192.168.4.0/24, so packets forwarded to this route are dropped, use the commands:

```
awplus# configure terminal
awplus(config)# ip route 192.168.4.0/24 null
```

To add the destination 192.168.3.0 with the mask 255.255.255.0 as a static route available through the device at "10.10.0.2" with an administrative distance of 128, use the commands:

```
awplus# configure terminal
awplus(config)# ip route 192.168.3.0 255.255.255.0 10.10.0.2
128
```

Examples (VRF-lite) To create a static route from source VRF instance red, to the subnet 192.168.50.0/24 with a next hop of 192.168.20.6, use the following commands for static intra-VRF routing configuration:

```
awplus# configure terminal
awplus(config)# ip route vrf red 192.168.50.0/24 192.168.20.6
```

To remove a static route from source VRF red, to the subnet 192.168.50.0/24 with a next hop of 192.168.20.6, use the following commands for static intra-VRF routing configuration:

```
awplus# configure terminal
awplus(config)# no ip route vrf red 192.168.50.0/24
192.168.20.6
```

To create a static route from source VRF red, to the subnet 192.168.50.0/24 with a next hop of 192.168.20.6 via vlan10, use the following commands for static inter-VRF routing configuration:

```
awplus# configure terminal
awplus(config)# ip route vrf red 192.168.50.0/24 192.168.20.6
vlan10
```

Related Commands

show ip route

show ip route database

Command changes

Version 5.4.6-2.1: VRF-lite support added.

ipv6 route

Overview This command adds a static IPv6 route to the Routing Information Base (RIB). If this route is the best route for the destination, then your device adds it to the Forwarding Information Base (FIB). Your device uses the FIB to advertise routes to neighbors and forward packets.

The **no** variant of this command removes the static route.

Syntax

```
ipv6 route <dest-prefix> <dest-prefix/length>
{<gateway-ip>|<gateway-name>} [<distvalue>]
```

```
no ipv6 route <dest-prefix> <dest-prefix/length>
{<gateway-ip>|<gateway-name>} [<distvalue>]
```

Parameter	Description
<dest-prefix/length>	Specifies the IP destination prefix. The IPv6 address prefix uses the format X:X::/prefix-length. The prefix-length is usually set between 0 and 64.
<gateway-ip>	Specifies the IP gateway (or next hop) address. The IPv6 address uses the format X:X::X:X/Prefix-Length. The prefix-length is usually set between 0 and 64.
<gateway-name>	Specifies the name of the gateway (or next hop) interface.
<distvalue>	Specifies the administrative distance for the route. Valid values are from 1 to 255.

Mode Global Configuration

Usage Administrative distance can be modified so static routes do not take priority over other routes.

Example

```
awplus# configure terminal
awplus(config)# ipv6 route 2001:0db8::1/128 vlan2 32
```

Validation Commands show running-config

show ipv6 route

max-fib-routes

Overview This command enables you to control the maximum number of FIB routes configured. It operates by providing parameters that enable you to configure preset maximums and warning message thresholds.

NOTE: *When using VRF-lite, this command applies to the Global VRF instance; to set the max-fib-routes for a user-defined VRF instance use the max-fib-routes (VRF) command. For static routes use the max-static-routes command for the Global VRF instance and the max-static-routes (VRF) command for a user-defined VRF instance.*

Use the **no** variant of this command to set the maximum number of FIB routes to the default of 4294967294 FIB routes.

Syntax

```
max-fib-routes <1-4294967294> [<1-100>|warning-only]
no max-fib-routes
```

Parameter	Description
`max-fib-routes`	This is the maximum number of routes that can be stored in the device's Forwarding Information dataBase. In practice, other practical system limits would prevent this maximum being reached.
<1-4294967294>	The allowable configurable range for setting the maximum number of FIB-routes.
<1-100>	This parameter enables you to optionally apply a percentage value. This percentage will be based on the maximum number of FIB routes you have specified. This will cause a warning message to appear when your routes reach your specified percentage value. Routes can continue to be added until your configured maximum value is reached.
`warning-only`	This parameter enables you to optionally apply a warning message. If you set this option a warning message will appear if your maximum configured value is reached. Routes can continue to be added until your device reaches either the maximum capacity value of 4294967294, or a practical system limit.

Default The default number of FIB routes is the maximum number of FIB routes (4294967294).

Mode Global Configuration

Examples To set the maximum number of dynamic routes to 2000 and warning threshold of 75%, use the following commands:

```
awplus# config terminal
awplus(config)# max-fib-routes 2000 75
```

Related Commands max-fib-routes (VRF)

max-static-routes

Overview Use this command to set the maximum number of static routes, excluding FIB (Forwarding Information Base) routes.

NOTE: *For FIB routes use the max-fib-routes command.*

Use the **no** variant of this command to set the maximum number of static routes to the default of 1024 static routes.

Syntax

```
max-static-routes <1-1024>
no max-static-routes
```

Default The default number of static routes is the maximum number of static routes (1024).

Mode Global Configuration

Example To reset the maximum number of static routes to the default maximum, use the command:

```
awplus# configure terminal
awplus(config)# no max-static-routes
```

NOTE: *Static routes are applied before adding routes to the RIB (Routing Information Base). Therefore, rejected static routes will not appear in the running config.*

Related Commands max-fib-routes

maximum-paths

Overview This command enables ECMP on your device, and sets the maximum number of paths that each route has in the Forwarding Information Base (FIB). ECMP is enabled by default.

The **no** variant of this command sets the maximum paths to the default of 4.

ECMP path calculations are flow-based. This means that packets from the same flow will always be sent on the same path.

Syntax

```
maximum-paths <1-8>
no maximum-paths
```

Parameter	Description
<1-8>	The maximum number of paths that a route can have in the FIB.

Default By default the maximum number of paths is 4.

Mode Global Configuration

Examples To set the maximum number of paths for each route in the FIB to 5, use the command:

```
awplus# configure terminal
awplus(config)# maximum-paths 5
```

To set the maximum paths for a route to the default of 4, use the command:

```
awplus# configure terminal
awplus(config)# no maximum-paths
```

show ip route

Overview Use this command to display routing entries in the FIB (Forwarding Information Base). The FIB contains the best routes to a destination, and your device uses these routes when forwarding traffic. You can display a subset of the entries in the FIB based on protocol.

To modify the lines displayed, use the | (output modifier token); to save the output to a file, use the > output redirection token.

VRF-lite If VRF-lite is configured, you can display routing entries in the FIB associated with either the global routing domain or a named VRF.

Syntax
```
show ip route [bgp|connected|ospf|rip|static|<ip-addr>|
<ip-addr/prefix-length>]
```

Syntax (VRF-lite)
```
show ip route {vrf <vrf-name>|global}
[bgp|connected|ospf|rip|static]
```

Parameter	Description
`global`	If VRF-lite is configured, apply the command to the global routing and forwarding table.
`vrf`	Apply the command to the specified VRF instance.
`<vrf-name>`	The name of the VRF instance.
`bgp`	Displays only the routes learned from BGP.
`connected`	Displays only the routes learned from connected interfaces.
`ospf`	Displays only the routes learned from OSPF.
`rip`	Displays only the routes learned from RIP.
`static`	Displays only the static routes you have configured.
`<ip-addr>`	Displays the routes for the specified address. Enter an IPv4 address.
`<ip-addr/prefix-length>`	Displays the routes for the specified network. Enter an IPv4 address and prefix length.

Mode User Exec and Privileged Exec

Example To display the static routes in the FIB, use the command:

```
awplus# show ip route static
```

To display the OSPF routes in the FIB, use the command:

```
awplus# show ip route ospf
```

Example (VRF-lite) To display all routing entries in the FIB associated with a VRF instance `red`, use the command:

```
awplus# show ip route vrf red
```

Output Each entry in the output from this command has a code preceding it, indicating the source of the routing entry. For example, O indicates OSPF as the origin of the route. The first few lines of the output list the possible codes that may be seen with the route entries.

Typically, route entries are composed of the following elements:

- code
- a second label indicating the sub-type of the route
- network or host IP address
- administrative distance and metric
- next hop IP address
- outgoing interface name
- time since route entry was added

Figure 24-1: Example output from the **show ip route** command

```
Codes: C - connected, S - static, R - RIP, B - BGP
       O - OSPF, IA - OSPF inter area
       N1 - OSPF NSSA external type 1, N2 - OSPF NSSA external type 2
       E1 - OSPF external type 1, E2 - OSPF external type 2
       * - candidate default

O       10.10.37.0/24 [110/11] via 10.10.31.16, vlan2, 00:20:54
C       3.3.3.0/24 is directly connected, vlan1
C       10.10.31.0/24 is directly connected, vlan2
C       10.70.0.0/24 is directly connected, vlan4
O E2    14.5.1.0/24 [110/20] via 10.10.31.16, vlan2, 00:18:56
C       33.33.33.33/32 is directly connected, lo
```

Connected Route The connected route entry consists of:

```
C       10.10.31.0/24 is directly connected, vlan2
```

This route entry denotes:

- Route entries for network `10.10.31.0/24` are derived from the IP address of local interface `vlan2`.
- These routes are marked as Connected routes `(C)` and always preferred over routes for the same network learned from other routing protocols.

OSPF Route The OSPF route entry consists of:

```
O       10.10.37.0/24 [110/11] via 10.10.31.16, vlan2, 00:20:54
```

This route entry denotes:

- This route in the network `10.10.37.0/24` was added by OSPF.
- This route has an administrative distance of 110 and metric/cost of 11.
- This route is reachable via next hop `10.10.31.16`.
- The outgoing local interface for this route is `vlan2`.
- This route was added 20 minutes and 54 seconds ago.

OSPF External Route

The OSPF external route entry consists of:

```
O E2    14.5.1.0/24 [110/20] via 10.10.31.16, vlan2, 00:18:56
```

This route entry denotes that this route is the same as the other OSPF route explained above; the main difference is that it is a Type 2 External OSPF route.

Related Commands

ip route

maximum-paths

show ip route database

Command changes

Version 5.4.6-2.1: VRF-lite support added.

show ip route database

Overview This command displays the routing entries in the RIB (Routing Information Base).

When multiple entries are available for the same prefix, RIB uses the routes' administrative distances to choose the best route. All best routes are entered into the FIB (Forwarding Information Base). To view the routes in the FIB, use the show ip route command.

To modify the lines displayed, use the | (output modifier token); to save the output to a file, use the > output redirection token.

Syntax
```
show ip route database [bgp|connected|ospf|rip|static]
```

Syntax (VRF-lite)
```
show ip route [vrf <vrf-name>|global] database
[bgp|connected|ospf|rip|static]
```

Parameter	Description
`global`	If VRF-lite is configured, apply the command to the global routing and forwarding table.
`vrf`	Apply the command to the specified VRF instance.
`<vrf-name>`	The name of the VRF instance.
`bgp`	Displays only the routes learned from BGP.
`connected`	Displays only the routes learned from connected interfaces.
`ospf`	Displays only the routes learned from OSPF.
`rip`	Displays only the routes learned from RIP.
`static`	Displays only the static routes you have configured.

Mode User Exec and Privileged Exec

Example To display the static routes in the RIB, use the command:

```
awplus# show ip route database static
```

Output Figure 24-2: Example output from the **show ip route database** command

```
Codes: C - connected, S - static, R - RIP, B - BGP
       O - OSPF, IA - OSPF inter area
       N1 - OSPF NSSA external type 1, N2 - OSPF NSSA external type 2
       E1 - OSPF external type 1, E2 - OSPF external type 2
              > - selected route, * - FIB route, p - stale info

O    *> 9.9.9.9/32 [110/31] via 10.10.31.16, vlan2, 00:19:21
O       10.10.31.0/24 [110/1] is directly connected, vlan2, 00:28:20
C    *> 10.10.31.0/24 is directly connected, vlan2
S    *> 10.10.34.0/24 [1/0] via 10.10.31.16, vlan2
O       10.10.34.0/24 [110/31] via 10.10.31.16, vlan2, 00:21:19
O    *> 10.10.37.0/24 [110/11] via 10.10.31.16, vlan2, 00:21:19
C    *> 10.30.0.0/24 is directly connected, vlan6
S    *> 11.22.11.0/24 [1/0] via 10.10.31.16, vlan2
O E2 *> 14.5.1.0/24 [110/20] via 10.10.31.16,vlan2, 00:19:21
O       16.16.16.16/32 [110/11] via 10.10.31.16, vlan2, 00:21:19
S    *> 16.16.16.16/32 [1/0] via 10.10.31.16, vlan2
O    *> 17.17.17.17/32 [110/31] via 10.10.31.16, vlan2, 00:21:19
C    *> 45.45.45.45/32 is directly connected, lo
O    *> 55.55.55.55/32 [110/21] via 10.10.31.16, vlan2, 00:21:19
C    *> 127.0.0.0/8 is directly connected, lo
```

Example (VRF-lite) To display all routing entries in the RIB associated with a VRF instance `red`, use the command:

```
awplus# show ip route vrf red database
```

Output Figure 24-3: Example output from the **show ip route vrf red database** command

```
[VRF: red]
Codes: C - connected, S - static, R - RIP, B - BGP
       O - OSPF, IA - OSPF inter area
       N1 - OSPF NSSA external type 1, N2 - OSPF NSSA external type 2
       E1 - OSPF external type 1, E2 - OSPF external type 2
              > - selected route, * - FIB route, p - stale info

O       192.168.10.0/24 [110/1] is directly connected, vlan1, 06:45:51
C    *> 192.168.10.0/24 is directly connected, vlan1
B     > 192.168.33.0/24 [20/0] via 192.168.30.3, 06:45:52
O E2 *> 192.168.110.0/24 [110/20] via 192.168.10.2, vlan1, 06:45:00
O E2 *> 192.168.111.0/24 [110/20] via 192.168.10.2, vlan1, 06:45:00
```

The routes added to the FIB are marked with a `*`. When multiple routes are available for the same prefix, the best route is indicated with the > symbol. All unselected routes have neither the `*` nor the > symbol.

```
S    *> 10.10.34.0/24 [1/0] via 10.10.31.16, vlan2
O       10.10.34.0/24 [110/31] via 10.10.31.16, vlan2, 00:21:19
```

These route entries denote:

- The same prefix was learned from OSPF and from static route configuration.

- Since this static route has a lower administrative distance than the OSPF route (110), the static route (1) is selected and installed in the FIB.

If the static route becomes unavailable, then the device automatically selects the OSPF route and installs it in the FIB.

Related Commands

maximum-paths

show ip route

Command changes

Version 5.4.6-2.1: VRF-lite support added.

show ip route summary

Overview This command displays a summary of the current RIB (Routing Information Base) entries.

To modify the lines displayed, use the | (output modifier token); to save the output to a file, use the > output redirection token.

Syntax
```
show ip route summary
```

Syntax (VRF-lite)
```
show ip route summary [vrf <vrf-name>|global]
```

Parameter	Description
`vrf`	Specific VRF instance.
`<vrf-name>`	The name of the VRF instance.
`global`	The global routing and forwarding table.

Mode User Exec and Privileged Exec

Example To display a summary of the current RIB entries, use the command:

```
awplus# show ip route summary
```

Output Figure 24-4: Example output from the **show ip route summary** command

```
IP routing table name is Default-IP-Routing-Table(0)
IP routing table maximum-paths is 4
Route Source    Networks
connected       5
ospf            2
Total           8
```

Example (VRF-lite) To display a summary of the current RIB entries associated with a VRF instance red, use the command:

```
awplus# show ip route summary vrf red
```

Output Figure 24-5: Example output from the **show ip route summary vrf red** command

```
IP routing table name is Default-IP-Routing-Table(0)
IP routing table maximum-paths is 4
Route Source    Networks
connected       1
Total           1
FIB             0

[VRF: red]
Route Source    Networks
connected       1
ospf            2
Total           3
```

Related Commands

show ip route

show ip route database

Command changes

Version 5.4.6-2.1: VRF-lite support added.

show ipv6 route

Overview Use this command to display the IPv6 routing table for a protocol or from a particular table.

For information on filtering and saving command output, see the "Getting Started with AlliedWare Plus" Feature Overview and Configuration Guide.

Syntax

```
show ipv6 route
[connected|database|ospf|rip|static|summary|<ipv6-address>|
<ipv6-addr/prefix-length>)]
```

Parameter	Description
`connected`	Displays only the routes learned from connected interfaces.
`database`	Displays only the IPv6 routing information extracted from the database.
`ospf`	Displays only the routes learned from IPv6 Open Shortest Path First (OSPFv3).
`rip`	Displays only the routes learned from IPv6 Routing Information Protocol (RIPng).
`static`	Displays only the IPv6 static routes you have configured.
`summary`	Displays summary information from the IPv6 routing table.
`<ipv6-address>`	Displays the routes for the specified address in the IP routing table. The IPv6 address uses the format X:X::X:X/Prefix-Length. The prefix-length is usually set between 0 and 64.
`<ipv6-prefix/length>`	Displays only the routes for the specified IP prefix.

Mode User Exec and Privileged Exec

Example 1 To display an IP route with all parameters turned on, use the following command:

```
awplus# show ipv6 route
```

Output Figure 24-6: Example output of the **show ipv6 route** command

```
IPv6 Routing Table
Codes: C - connected, S - static, R - RIP, O - OSPF, B - BGP
S   ::/0 [1/0] via 2001::a:0:0:c0a8:a6, vlan10
C   2001:db8::a:0:0:0:0/64 via ::, vlan10
C   2001:db8::14:0:0:0:0/64 via ::, vlan20
C   2001:db8::0:0:0:0/64 via ::, vlan30
C   2001:db8::28:0:0:0:0/64 via ::, vlan40
C   2001:db8::fa:0:0:0:0/64 via ::, vlan250
C   2001:db8::/64 via ::, vlan250
C   2001:db8::/64 via ::, vlan40
C   2001:db8::/64 via ::, vlan20
C   2001:db8::/64 via ::, vlan10
```

Example 2 To display all database entries for an IP route, use the following command:

```
awplus# show ipv6 route database
```

Output Figure 24-7: Example output of the **show ipv6 route database** command

```
IPv6 Routing Table
Codes: C - connected, S - static, R - RIP, O - OSPF, B - BGP
> - selected route, * - FIB route, p - stale info
Timers: Uptime

S   ::/0 [1/0] via 2001::a:0:0:c0a8:a01 inactive, 6d22h12m
         [1/0] via 2001::fa:0:0:c0a8:fa01 inactive, 6d22h12m
```

show ipv6 route summary

Overview Use this command to display the summary of the current NSM RIB entries.

For information on filtering and saving command output, see the "Getting Started with AlliedWare Plus" Feature Overview and Configuration Guide.

Syntax

```
show ipv6 route summary
```

Mode User Exec and Privileged Exec

Example To display IP route summary, use the following command:

```
awplus# show ipv6 route summary
```

Output Figure 24-8: Example output from the **show ipv6 route summary** command

```
IPv6 routing table name is Default-IPv6-Routing-Table(0)
IPv6 routing table maximum-paths is 4
RouteSource     Networks
connected       4
rip             5
Total           9
FIB             5
```

Related Commands show ip route database

25 RIP Commands

Introduction

Overview This chapter provides an alphabetical reference of commands used to configure RIP.

For information about configuring RIP, see the RIP Feature Overview and Configuration Guide.

Command List

- "accept-lifetime" on page 814
- "address-family ipv4 (RIP)" on page 816
- "alliedware-behavior" on page 817
- "cisco-metric-behavior (RIP)" on page 819
- "clear ip rip route" on page 820
- "debug rip" on page 822
- "default-information originate (RIP)" on page 823
- "default-metric (RIP)" on page 824
- "distance (RIP)" on page 825
- "distribute-list (RIP)" on page 826
- "fullupdate (RIP)" on page 827
- "ip rip authentication key-chain" on page 828
- "ip rip authentication mode" on page 830
- "ip rip authentication string" on page 833
- "ip rip receive-packet" on page 835
- "ip rip receive version" on page 836
- "ip rip send-packet" on page 837
- "ip rip send version" on page 838

- "ip rip send version 1-compatible" on page 841
- "ip rip split-horizon" on page 843
- "key" on page 844
- "key chain" on page 845
- "key-string" on page 846
- "maximum-prefix" on page 847
- "neighbor (RIP)" on page 848
- "network (RIP)" on page 849
- "passive-interface (RIP)" on page 851
- "recv-buffer-size (RIP)" on page 852
- "redistribute (RIP)" on page 853
- "restart rip graceful" on page 855
- "rip restart grace-period" on page 856
- "route (RIP)" on page 857
- "router rip" on page 858
- "send-lifetime" on page 859
- "show debugging rip" on page 861
- "show ip protocols rip" on page 862
- "show ip rip" on page 863
- "show ip rip database" on page 864
- "show ip rip interface" on page 865
- "show ip rip vrf database" on page 866
- "show ip rip vrf interface" on page 867
- "timers (RIP)" on page 868
- "undebug rip" on page 870
- "version (RIP)" on page 871

accept-lifetime

Overview Use this command to specify the time period during which the authentication key on a key chain is received as valid.

Use the **no** variant of this command to remove a specified time period for an authentication key on a key chain as set previously with the **accept-lifetime** command.

Syntax

```
accept-lifetime <start-date> {<end-date>|
duration <seconds>|infinite}
```

```
no accept-lifetime
```

Parameter	Description	
<start-date>	Specifies the start time and date in the format: *<hh:mm:ss> <day> <month> <year>* or *<hh:mm:ss> <month> <day> <year>*, where:	
	<hh:mm:ss>	The time of the day, in hours, minutes and seconds
	<day>	<1-31> The day of the month
	<month>	The month of the year (the first three letters of the month, for example, Jan)
	<year>	<1993-2035> The year
<end-date>	Specifies the end time and date in the format: *<hh:mm:ss> <day> <month> <year>* or *<hh:mm:ss> <month> <day> <year>*, where:	
	<hh:mm:ss>	The time of the day, in hours, minutes and seconds
	<day>	<1-31> The day of the month
	<month>	The month of the year (the first three letters of the month, for example, Jan)
	<year>	<1993-2035> The year
<seconds>	<1-2147483646> Duration of the key in seconds.	
infinite	Never expires.	

Mode Keychain-key Configuration

Examples The following examples show the setting of accept-lifetime for key 1 on the key chain named “mychain”.

```
awplus# configure terminal
```

```
awplus(config)# key chain mychain
```

```
awplus(config-keychain)# key 1
```

```
awplus(config-keychain-key)# accept-lifetime 03:03:01 Sep 3
2016 04:04:02 Oct 6 2016
```

or:

```
awplus# configure terminal
awplus(config)# key chain mychain
awplus(config-keychain)# key 1
awplus(config-keychain-key)# accept-lifetime 03:03:01 3 Sep
2016 04:04:02 6 Oct 2016
```

Related Commands

key

key-string

key chain

send-lifetime

address-family ipv4 (RIP)

Overview This command enters the IPv4 address-family command mode. In this mode you can configure address-family specific parameters for a specific VRF (RIP) instance.

Syntax

```
address-family ipv4 vrf <vrf-name>
no address-family ipv4 vrf <vrf-name>
```

Parameter	Description
`ipv4`	Configure parameters relating to the RIP exchange of IPv4 prefixes.
`vrf`	Apply this command to a VRF instance.
`<vrf-name>`	The name of the VRF instance.

Mode Router Configuration

Usage To leave Address Family mode and return to Router Configuration mode, use the exit-address-family command.

Example In this example the address family "green" is entered, and then exited by using the exit-address-family command.

```
awplus# configure terminal
awplus(config)# router rip
awplus(config-router)# address-family ipv4 vrf green
awplus(config-router-af)# exit-address-family
awplus(config-router)#
```

Related Commands exit-address-family

Command changes Version 5.4.6-2.1: VRF-lite support added.

alliedware-behavior

Overview This command configures your device to exhibit AlliedWare behavior when sending RIPv1 response/update messages. Configuring for this behavior may be necessary if you are replacing an AlliedWare device with an AlliedWare Plus device and wish to ensure consistent RIPv1 behavior.

Use the no variant of this command to implement AlliedWare Plus behavior.

This command has no impact on devices running RIPv2. Reception and transmission can be independently altered to conform to AlliedWare standard.

Syntax

```
alliedware-behavior {rip1-send|rip1-recv}
no alliedware-behavior {rip1-send|rip1-recv}
```

Parameter	Description
`rip1-send`	Configures the router to behave in AlliedWare mode when **sending** update messages.
`rip1-recv`	Configures the router to behave in AlliedWare mode when **receiving** update messages.

Default By default when sending out RIPv1 updates on an interface, if the prefix (learned through RIPv2 or otherwise redistributed into RIP) being advertised does not match the subnetting used on the outgoing RIPv1 interface it will be filtered. The **alliedware-behavior** command returns your router's RIPv1 behavior to the AlliedWare format, where the prefix will be advertised as-is.

For example, if a RIPv1 update is being sent over interface 192.168.1.4/26, by default the prefix 192.168.1.64/26 will be advertised, but the prefix 192.168.1.144/28 will be filtered because the mask /28 does not match the interface's mask of /26. If **alliedware- behavior r ip1-send** is configured, the prefix 192.168.1.144 would be sent as-is.

Mode Router Configuration

Examples To configure your device for **alliedware-behavior** when sending and receiving RIPv1 update messages, enter the commands:

```
awplus# configure terminal
awplus(config)# router rip
awplus(config-router)# alliedware-behavior rip1-send
awplus(config-router)# alliedware-behavior rip1-recv
```

To return your device to **AlliedWare Plus**-like behavior when sending and receiving RIPv1 update messages, enter the commands:

```
awplus# configure terminal
awplus(config)# router rip
awplus(config-router)# no alliedware-behavior rip1-send
awplus(config-router)# no alliedware-behavior rip1-recv
```

Validation Commands

show ip protocols rip

show running-config

Related Commands

fullupdate (RIP)

cisco-metric-behavior (RIP)

Overview Use this command to enable or disable the RIP routing metric update to conform to Cisco's implementation. This command is provided to allow inter-operation with older Cisco devices that do not conform to the RFC standard for RIP route metrics.

Use the **no** variant of this command to disable this feature.

Syntax

```
cisco-metric-behavior {enable|disable}
no cisco-metric-behavior
```

Parameter	Description
`enable`	Enables updating the metric consistent with Cisco.
`disable`	Disables updating the metric consistent with Cisco.

Default By default, the Cisco metric-behavior is disabled.

Mode Router Configuration

Examples To enable the routing metric update to behave as per the Cisco implementation, enter the commands:

```
awplus# configure terminal
awplus(config)# router rip
awplus(config-router)# cisco-metric-behavior enable
```

To disable the routing metric update to behave as per the default setting, enter the commands:

```
awplus# configure terminal
awplus(config)# router rip
awplus(config-router)# no cisco-metric-behavior
```

Validation Commands show running-config

clear ip rip route

Overview Use this command to clear specific data from the RIP routing table.

Syntax
```
clear ip rip route {<ip-dest-network/prefix-length>|
static|connected|rip|ospf|bgp|invalid-routes|all}
```

Syntax (VRF-lite)
```
clear ip rip [vrf <vrf-name>] route
{<ip-dest-network/prefix-length>
|static|connected|rip|ospf|bgp|invalid-routes|all}
```

Parameter	Description
`vrf`	Apply this command to a VRF instance.
<vrf-name>	The name of the VRF instance.
<ip-dest-network/prefix-length>	Removes entries which exactly match this destination address from RIP routing table. Enter the IP address and prefix length of the destination network.
`static`	Removes static entries from the RIP routing table.
`connected`	Removes entries for connected routes from the RIP routing table.
`rip`	Removes only RIP routes from the RIP routing table.
`ospf`	Removes only OSPF routes from the RIP routing table.
`bgp`	Removes only BGP routes from the RIP routing table.
`invalid-routes`	Removes routes with metric 16 immediately. Otherwise, these routes are not removed until RIP times out the route after 2 minutes.
`all`	Clears the entire RIP routing table.

Mode Privileged Exec

Usage Using this command with the **all** parameter clears the RIP table of all the routes.

Examples To clear the route 10.0.0.0/8 from the RIP routing table, use the following command:

```
awplus# clear ip rip route 10.0.0.0/8
```

Examples (VRF-lite) To clear RIP routes associated with the VRF instance ‘red’ for OSPF routes, use the following command:

```
awplus# clear ip rip vrf red route ospf
```

To clear the route 10.0.0.0/8 from the RIP routing table for the VRF instance ‘red’, use the following command:

```
awplus# clear ip rip vrf red route 10.0.0.0/8
```

Command changes Version 5.4.6-2.1: VRF-lite support added.

debug rip

Overview Use this command to specify the options for the displayed debugging information for RIP events and RIP packets.

Use the **no** variant of this command to disable the specified debug option.

Syntax

```
debug rip {events|nsm|<packet>|all}
no debug rip {events|nsm|<packet>|all}
```

Parameter	Description
`events`	RIP events debug information is displayed.
`nsm`	RIP and NSM communication is displayed.
`<packet>`	`packet [recv|send] [detail]` Specifies RIP packets only.
`recv`	Specifies that information for received packets be displayed.
`send`	Specifies that information for sent packets be displayed.
`detail`	Displays detailed information for the sent or received packet.
`all`	Displays all RIP debug information.

Default Disabled

Mode Privileged Exec and Global Configuration

Example The following example displays information about the RIP packets that are received and sent out from the device.

```
awplus# debug rip packet
```

Related Commands undebug rip

default-information originate (RIP)

Overview Use this command to generate a default route into the Routing Information Protocol (RIP).

Use the **no** variant of this command to disable this feature.

Syntax
```
default-information originate
no default-information originate
```

Default Disabled

Mode Router Configuration

Usage If routes are being redistributed into RIP and the router's route table contains a default route, within one of the route categories that are being redistributed, the RIP protocol will advertise this default route, irrespective of whether the **default-information originate** command has been configured or not. However, if the router has not redistributed any default route into RIP, but you want RIP to advertise a default route anyway, then use this command.

This will cause RIP to create a default route entry in the RIP database. The entry will be of type RS (Rip Static). Unless actively filtered out, this default route will be advertised out every interface that is sending RIP. Split horizon does not apply to this route, as it is internally generated. This operates quite similarly to the OSPF **default-information originate always** command.

Example
```
awplus# configure terminal
awplus(config)# router rip
awplus(config-router)# default-information originate
```

default-metric (RIP)

Overview Use this command to specify the metrics to be assigned to redistributed RIP routes.

Use the **no** variant of this command to reset the RIP metric back to its default (1).

Syntax

```
default-metric <metric>
no default-metric [<metric>]
```

Parameter	Description
<metric>	<1-16> Specifies the value of the default metric.

Default By default, the RIP metric value is set to 1.

Mode RIP Router Configuration or RIP Router Address Family Configuration for a VRF instance.

Usage This command is used with the redistribute (RIP) command to make the routing protocol use the specified metric value for all redistributed routes, regardless of the original protocol that the route has been redistributed from.

Examples This example assigns the cost of 10 to the routes that are redistributed into RIP.

```
awplus# configure terminal
awplus(config)# router rip
awplus(config-router)# default-metric 10
awplus(config-router)# redistribute ospf
awplus(config-router)# redistribute connected
```

Example (VRF-lite) This example assigns the cost of 10 to the routes which are redistributed into RIP for the VRF instance blue.

```
awplus# configure terminal
awplus(config)# router rip
awplus(config-router)# address family ipv4 vrf blue
awplus(config-router-af)# default-metric 10
awplus(config-router-af)# redistribute ospf
awplus(config-router-af)# redistribute connected
```

Related Commands redistribute (RIP)

Command changes Version 5.4.6-2.1: VRF-lite support added.

distance (RIP)

Overview This command sets the administrative distance for RIP routes. Your device uses this value to select between two or more routes to the same destination obtained from two different routing protocols. The route with the smallest administrative distance value is added to the Forwarding Information Base (FIB). For more information, see the Route Selection Feature Overview and Configuration Guide.

The **no** variant of this command sets the administrative distance for the RIP route to the default of 120.

Syntax

```
distance <1-255> [<ip-addr/prefix-length>]
no distance [<1-255>] [<ip-addr/prefix-length>]
```

Parameter	Description
<1-255>	The administrative distance value you are setting for this RIP route.
<ip-addr/prefix-length>	The network IP address and prefix-length that you are changing the administrative distance for.

Mode RIP Router Configuration or RIP Router Address Family Configuration for a VRF instance.

Examples To set the administrative distance to 8 for the RIP routes within the 10.0.0.0/8 network, use the commands:

```
awplus# configure terminal
awplus(config)# router rip
awplus(config-router)# distance 8 10.0.0.0/8
```

To set the administrative distance to the default of 120 for the RIP routes within the 10.0.0.0/8 network, use the commands:

```
awplus# configure terminal
awplus(config)# router rip
awplus(config-router)# no distance 8 10.0.0.0/8
```

Example (VRF-lite) This example assigns a cost of 10 to the routes for the VRF instance blue, when redistributed into RIP.

```
awplus# configure terminal
awplus(config)# router rip
awplus(config-router)# address family ipv4 blue
awplus(config-router-af)# distance 10
```

Command changes Version 5.4.6-2.1: VRF-lite support added.

distribute-list (RIP)

Overview Use this command to filter incoming or outgoing route updates using the prefix-list.

When running VRF-lite, this command can be applied to a specific VRF instance.

Use the **no** variant of this command to disable this feature.

Syntax

```
distribute-list prefix <prefix-list> {in|out} [<interface>]
no distribute-list prefix <prefix-list> {in|out}  [<interface>]
```

Parameter	Description
`prefix`	Filter prefixes in routing updates.
<prefix-list>	Specifies the name of the IPv4 prefix-list to use.
`in`	Filter incoming routing updates.
`out`	Filter outgoing routing updates.
<interface>	The interface on which distribute-list applies. For instance: `vlan2`

Default Disabled

Mode RIP Router Configuration or RIP Router Address Family Configuration for a VRF instance.

Usage Filter out incoming or outgoing route updates using prefix-list. If you do not specify the name of the interface, the filter will be applied to all interfaces.

Examples In this example the following commands are used to apply a prefix list called myfilter to filter incoming routing updates in `vlan2`

```
awplus# configure terminal
awplus(config)# router rip
awplus(config-router)# distribute-list prefix myfilter in vlan2
```

Example (VRF-lite) This example applies the commands of the previous example, but to a specific VRF named blue:

```
awplus# configure terminal
awplus(config)# router rip
awplus(config-router)# address-family ipv4 vrf blue
awplus(config-router-af)# distribute-list prefix myfilter in
vlan2
```

Command changes Version 5.4.6-2.1: VRF-lite support added.

fullupdate (RIP)

Overview Use this command to specify which routes RIP should advertise when performing a triggered update. By default, when a triggered update is sent, RIP will only advertise those routes that have changed since the last update. When **fullupdate** is configured, the device advertises the full RIP route table in outgoing triggered updates, including routes that have not changed. This enables faster convergence times, or allows inter-operation with legacy network equipment, but at the expense of larger update messages.

Use the **no** variant of this command to disable this feature.

Syntax

```
fullupdate
no fullupdate
```

Default By default this feature is disabled.

Mode RIP Router Configuration or RIP Router Address Family Configuration for a VRF instance.

Usage (VRF-lite) If VRF-lite is configured, you can apply this command for either the global routing environment, or to a specific VRF instance.

Example To enable the fullupdate (RIP) function, use the commands:

```
awplus# configure terminal
awplus(config)# router rip
awplus(config-router)# fullupdate
```

Example (VRF-lite) To enable the full update (RIP) function on the VRF instance named 'blue', use the commands:

```
awplus# configure terminal
awplus(config)# router rip
awplus(config-router)# address-family ipv4 vrf blue
awplus(config-router-af)# fullupdate
```

Command changes Version 5.4.6-2.1: VRF-lite support added.

ip rip authentication key-chain

Overview Use this command to enable RIPv2 authentication on an interface and specify the name of the key chain to be used.

Use the **no** variant of this command to disable this function.

Syntax

```
ip rip authentication key-chain <key-chain-name>
no ip rip authentication key-chain
```

Parameter	Description
<key-chain-name>	Specify the name of the key chain. This is an alpha-numeric string, but it cannot include spaces.

Mode Interface Configuration for a VLAN interface or a PPP interface.

Usage Use this command to perform authentication on the interface. Not configuring the key chain results in no authentication at all.

The AlliedWare Plus™ implementation provides the choice of configuring authentication for single key or multiple keys at different times. Use the ip rip authentication string command for single key authentication. Use the ip rip authentication key-chain command for multiple keys authentication. See the RIP Feature Overview and Configuration Guide for illustrated RIP configuration examples.

For multiple key authentication, use the following steps to configure a route to enable RIPv2 authentication using multiple keys at different times:

1) Define a key chain with a key chain name, using the following commands:

```
awplus# configure terminal
awplus(config)# key chain <key-chain-name>
```

2) Define a key on this key chain, using the following command:

```
awplus(config-keychain)# key <keyid>
```

3) Define the password used by the key, using the following command:

```
awplus(config-keychain-key)# key-string <key-password>
```

4) Enable authentication on the desired interface and specify the key chain to be used, using the following commands:

```
awplus# configure terminal
awplus(config)# interface <id>
awplus(config-if)# ip rip authentication key-chain
<key-chain-name>
```

5) Specify the mode of authentication for the given interface (text or MD5), using the following command:

```
awplus(config-if)# ip rip authentication mode {md5|text}
```

Example In the following example of a configuration for multiple keys authentication, a password “toyota” is set for key 1 in key chain “cars”. Authentication is enabled on vlan2 and the authentication mode is set to MD5:

```
awplus# configure terminal
awplus(config)# key chain cars
awplus(config-keychain)# key 1
awplus(config-keychain-key)# key-string toyota
awplus(config-keychain-key)# accept-lifetime 10:00:00 Oct 08 2016 duration 43200
awplus(config-keychain-key)# send-lifetime 10:00:00 Oct 08 2016 duration 43200
awplus(config-keychain-key)# exit
awplus(config-keychain)# exit
awplus(config)# interface vlan2
awplus(config-if)# ip rip authentication key-chain cars
awplus(config-if)# ip rip authentication mode md5
```

Example In the following example, the VLAN interface vlan23 is configured to use key-chain authentication with the keychain “mykey”. See the key command for a description of how a key chain is created.

```
awplus# configure terminal
awplus(config)# interface vlan23
awplus(config-if)# ip rip authentication key-chain mykey
```

The following example shows md5 authentication configured on the PPP interface ppp0, ensuring authentication of RIP packets received on this interface.

```
awplus# configure terminal
awplus(config)# interface ppp0
awplus(config-if)# ip rip authentication key-chain mykey
```

Related Commands

accept-lifetime

send-lifetime

ip rip authentication mode

ip rip authentication string

key

key chain

ip rip authentication mode

Overview Use this command to specify the type of authentication mode used for RIP v2 packets.

Use the **no** variant of this command to restore clear text authentication.

Syntax

```
ip rip authentication mode {md5|text}
no ip rip authentication mode
```

Parameter	Description
`md5`	Uses the keyed MD5 authentication algorithm.
`text`	Specifies clear text or simple password authentication.

Default Text authentication is enabled

Mode Interface Configuration for a VLAN interface or a PPP interface.

Usage The AlliedWare Plus™ implementation provides the choice of configuring authentication for single key or multiple keys at different times. Use the ip rip authentication string command for single key authentication. Use the ip rip authentication key-chain command for multiple keys authentication. See the RIP Feature Overview and Configuration Guide for illustrated RIP configuration examples.

Usage: single key Use the following steps to configure a route to enable RIPv2 authentication using a single key or password:

1) Define the authentication string or password used by the key for the desired interface, using the following commands:

```
awplus# configure terminal
awplus(config)# interface <id>
awplus(config-if)# ip rip authentication string
<auth-string>
```

2) Specify the mode of authentication for the given interface (text or MD5), using the following commands:

```
awplus# configure terminal
awplus(config)# interface <id>
awplus(config-if)# ip rip authentication mode {md5|text}
```

Usage: multiple key

For multiple keys authentication, use the following steps to configure a route to enable RIPv2 authentication using multiple keys at different times:

1) Define a key chain with a key chain name, using the following commands:

```
awplus# configure terminal
awplus(config)# key chain <key-chain-name>
```

2) Define a key on this key chain using the following command:

```
awplus(config-keychain)# key <keyid>
```

3) Define the password used by the key, using the following command:

```
awplus(config-keychain-key)# key-string <key-password>
```

4) Enable authentication on the desired interface and specify the key chain to be used, using the following commands:

```
awplus(config-if)# ip rip authentication key-chain
<key-chain-name>
```

5) Specify the mode of authentication for the given interface (text or MD5), using the following commands:

```
awplus(config-if)# ip rip authentication mode {md5|text}
```

Example 1

In the following example of a configuration for multiple keys authentication, a password of "toyota" is set for key 1 in key chain "cars". Authentication is enabled on vlan2 and the authentication mode is set to MD5:

```
awplus# configure terminal
awplus(config)# key chain cars
awplus(config-keychain)# key 1
awplus(config-keychain-key)# key-string toyota
awplus(config-keychain-key)# accept-lifetime 10:00:00 Oct 08
2016 duration 43200
awplus(config-keychain-key)# send-lifetime 10:00:00 Oct 08 2016
duration 43200
awplus(config-keychain-key)# exit
awplus(config-keychain)# exit
awplus(config)# interface vlan2
awplus(config-if)# ip rip authentication key-chain cars
awplus(config-if)# ip rip authentication mode md5
```

Example 2

The following example shows MD5 authentication configured on VLAN interface vlan2, ensuring authentication of RIP packets received on this interface.

```
awplus# configure terminal
awplus(config)# interface vlan2
awplus(config-if)# ip rip authentication mode md5
```

The following example shows md5 authentication configured on the PPP interface ppp0, ensuring authentication of RIP packets received on this interface.

```
awplus# configure terminal
awplus(config)# interface ppp0
awplus(config-if)# ip rip authentication mode md5
```

Example 3 The following example specifies “mykey” as the authentication string with MD5 authentication, for the VLAN interface vlan2:

```
awplus# configure terminal
awplus(config)# interface vlan2
awplus(config-if)# ip rip authentication string mykey
awplus(config-if)# ip rip authentication mode md5
```

Related Commands

ip rip authentication string

ip rip authentication key-chain

ip rip authentication string

Overview Use this command to specify the authentication string or password used by a key.

Use the **no** variant of this command to remove the authentication string.

Syntax

```
ip rip authentication string <auth-string>
no ip rip authentication string
```

Parameter	Description
<auth-string>	The authentication string or password used by a key. It is an alpha-numeric string and can include spaces.

Mode Interface Configuration for a VLAN interface or a PPP interface.

Usage The AlliedWare Plus™ implementation provides the choice of configuring authentication for single key or multiple keys at different times. Use this command to specify the password for a single key on an interface. Use the ip rip authentication key-chain command for multiple keys authentication. For information about configuring RIP, see the RIP Feature Overview and Configuration Guide.

Use the following steps to configure a route to enable RIPv2 authentication using a single key or password:

1) Define the authentication string or password used by the key for the desired interface, using the following commands:

```
awplus# configure terminal
awplus(config)# interface <id>
```

2) Specify the mode of authentication for the given interface (text or MD5), using the following commands:

```
awplus# configure terminal
awplus(config-if)# ip rip authentication string
<auth-string>
awplus(config)# interface <id>
awplus(config-if)# ip rip authentication mode {md5|text}
```

Example See the example below to specify `mykey` as the authentication string with MD5 authentication for the VLAN interface vlan2:

```
awplus# configure terminal
awplus(config)# interface vlan2
awplus(config-if)# ip rip authentication string mykey
awplus(config-if)# ip rip authentication mode md5
```

See the example below to specify `mykey` as the authentication string with MD5 authentication for the PPP interface ppp0:

```
awplus# configure terminal
awplus(config)# interface ppp0
awplus(config-if)# ip rip authentication string mykey
awplus(config-if)# ip rip authentication mode md5
```

Example In the following example, the VLAN interface `vlan2` is configured to have an authentication string as `guest`. Any received RIP packet in that interface should have the same string as password.

```
awplus# configure terminal
awplus(config)# interface vlan2
awplus(config-if)# ip rip authentication string guest
```

In the following example, the PPP interface `ppp0` is configured to have an authentication string as `guest`. Any received RIP packet in that interface should have the same string as password.

```
awplus# configure terminal
awplus(config)# interface ppp0
awplus(config-if)# ip rip authentication string guest
```

Related commands

ip rip authentication key-chain

ip rip authentication mode

ip rip receive-packet

Overview Use this command to configure the interface to enable the reception of RIP packets.

Use the **no** variant of this command to disable this feature.

Syntax

```
ip rip receive-packet
no ip rip receive-packet
```

Default Receive-packet is enabled

Mode Interface Configuration for a VLAN interface or a PPP interface.

Example This example shows packet receiving being turned on for the VLAN interface `vlan3`:

```
awplus# configure terminal
awplus(config)# interface vlan3
awplus(config-if)# ip rip receive-packet
```

This example shows packet receiving being turned on for the PPP interface `ppp0`:

```
awplus# configure terminal
awplus(config)# interface ppp0
awplus(config-if)# ip rip receive-packet
```

Related Commands ip rip send-packet

ip rip receive version

Overview Use this command to specify the version of RIP packets accepted on an interface and override the setting of the version command.

Use the **no** variant of this command to use the setting specified by the version (RIP) command.

Syntax

```
ip rip receive version {[1][2]}
no ip rip receive version
```

Parameter	Description
1	Specifies acceptance of RIP version 1 packets on the interface.
2	Specifies acceptance of RIP version 2 packets on the interface.

Default Version 2

Mode Interface Configuration for a VLAN interface or a PPP interface.

Usage This command applies to a specific VLAN interface and overrides any the version specified by the version (RIP) command.

RIP can be run in version 1 or version 2 mode. Version 2 has more features than version 1; in particular RIP version 2 supports authentication and classless routing. Once the RIP version is set, RIP packets of that version will be received and sent on all the RIP-enabled interfaces.

Example In the following example, the VLAN interface `vlan3` is configured to receive both RIP version 1 and 2 packets:

```
awplus# configure terminal
awplus(config)# interface vlan3
awplus(config-if)# ip rip receive version 1 2
```

In the following example, PPP interface `ppp0` is configured to receive both RIP version 1 and 2 packets:

```
awplus# configure terminal
awplus(config)# interface ppp0
awplus(config-if)# ip rip receive version 1 2
```

Related Commands version (RIP)

ip rip send-packet

Overview Use this command to enable sending RIP packets through the current interface.

Use the **no** variant of this command to disable this feature.

Syntax

```
ip rip send-packet
no ip rip send-packet
```

Default Send packet is enabled

Mode Interface Configuration for a VLAN interface or a PPP interface.

Example This example shows packet sending being turned on for the VLAN interface `vlan4`:

```
awplus# configure terminal
awplus(config)# interface vlan4
awplus(config-if)# ip rip send-packet
```

This example shows packet sending being turned on for the PPP interface `ppp0`:

```
awplus# configure terminal
awplus(config)# interface ppp0
awplus(config-if)# ip rip send-packet
```

Related Commands ip rip receive-packet

ip rip send version

Overview Use this command in Interface Configuration mode to specify the version of RIP packets sent on an interface and override the setting of the version (RIP) command. This mechanism causes RIP version 2 interfaces to send multicast packets instead of broadcasting packets.

Use the **no** variant of this command to use the setting specified by the version (RIP) command.

Syntax

```
ip rip send version {1|2|1 2|2 1}
no ip rip send version
```

Parameter	Description
1	Specifies the sending of RIP version 1 packets out of an interface.
2	Specifies the sending of RIP version 2 packets out of an interface.
12	Specifies the sending of both RIP version 1 and RIP version 2 packets out of an interface.
21	Specifies the sending of both RIP version 2 and RIP version 1 packets out of an interface.

Default RIP version 2 is enabled by default.

Mode Interface Configuration for a VLAN interface or a PPP interface.

Usage This command applies to a specific interface and overrides the version specified by the version (RIP) command.

RIP can be run in version 1 or version 2 mode. Version 2 has more features than version 1; in particular RIP version 2 supports authentication and classless routing. Once the RIP version is set, RIP packets of that version will be received and sent on all the RIP-enabled interfaces. Selecting version parameters 1 2 or 2 1 sends RIP version 1 and 2 packets.

Use the ip rip send version 1-compatible command in an environment where you cannot send multicast packets. For example, in environments where multicast is not enabled and where hosts do not listen to multicast.

Examples In the following example, the VLAN interface `vlan4` is configured to send both RIP version 1 and 2 packets.

```
awplus# configure terminal
awplus(config)# interface vlan4
awplus(config-if)# ip rip send version 1 2
```

In the following example, the VLAN interface `vlan4` is configured to send both RIP version 2 and 1 packets.

```
awplus# configure terminal
awplus(config)# interface vlan4
awplus(config-if)# ip rip send version 2 1
```

In the following example, the VLAN interface `vlan4` is configured to send RIP version 1 packets only.

```
awplus# configure terminal
awplus(config)# interface vlan4
awplus(config-if)# ip rip send version 1
```

In the following example, the VLAN interface `vlan4` is configured to send RIP version 2 packets only.

```
awplus# configure terminal
awplus(config)# interface vlan4
awplus(config-if)# ip rip send version 2
```

In the following example, the VLAN interface `vlan3` is configured to use the RIP version specified by the version (RIP) command.

```
awplus# configure terminal
awplus(config)# interface vlan3
awplus(config-if)# no ip rip send version
```

In the following example, the PPP interface `ppp0` is configured to send both RIP version 1 and 2 packets.

```
awplus# configure terminal
awplus(config)# interface ppp0
awplus(config-if)# ip rip send version 1 2
```

In the following example, the PPP interface `ppp0` is configured to send both RIP version 2 and 1 packets.

```
awplus# configure terminal
awplus(config)# interface ppp0
awplus(config-if)# ip rip send version 2 1
```

In the following example, the PPP interface `ppp0` is configured to send RIP version 1 packets only.

```
awplus# configure terminal
awplus(config)# interface ppp0
awplus(config-if)# ip rip send version 1
```

In the following example, the PPP interface `ppp0` is configured to send RIP version 2 packets only.

```
awplus# configure terminal
awplus(config)# interface ppp0
awplus(config-if)# ip rip send version 2
```

In the following example, the PPP interface `ppp2` is configured to use the RIP version specified by the version (RIP) command.

```
awplus# configure terminal
awplus(config)# interface ppp2
awplus(config-if)# no ip rip send version
```

Related Commands

ip rip send version 1-compatible

version (RIP)

ip rip send version 1-compatible

Overview Use this command in Interface Configuration mode to send RIP version 1 compatible packets from a RIP version 2 interfaces to other RIP Interfaces. This mechanism causes RIP version 2 interfaces to send broadcast packets instead of multicasting packets, and is used in environments where multicast is not enabled or where hosts do not listen to multicast.

Use the **no** variant of this command to use the setting specified by the version (RIP) command, and disable the broadcast of RIP version 2 packets that are sent as broadcast packets.

Syntax

```
ip rip send version 1-compatible
no ip rip send version
```

Parameter	Description
`1-compatible`	Specify this parameter to send RIP version 1 compatible packets from a version 2 RIP interface to other RIP interfaces. This mechanism causes version 2 RIP interfaces to broadcast packets instead of multicasting packets.

Default RIP version 2 is enabled by default.

Mode Interface Configuration for a VLAN interface or a PPP interface.

Usage This command applies to a specific interface and overrides the version specified by the version (RIP) command.

RIP can be run in version 1 compatible mode. Version 2 has more features than version 1; in particular RIP version 2 supports authentication and classless routing. Once the RIP version is set, RIP packets of that version will be received and sent on all the RIP-enabled interfaces.

Use the ip rip send version command in an environment where you can send multicast packets. For example, in environments where multicast is enabled and where hosts listen to multicast.

Examples In the following example, the VLAN interface `vlan2` is configured to send RIP version 1- compatible packets.

```
awplus# configure terminal
awplus(config)# interface vlan2
awplus(config-if)# ip rip send version 1-compatible
```

In the following example, the VLAN interface `vlan3` is configured to use the RIP version specified by the version (RIP) command.

```
awplus# configure terminal
awplus(config)# interface vlan3
awplus(config-if)# no ip rip send version
```

In the following example, the PPP interface `ppp1` is configured to send RIP version 1- compatible packets; so it broadcasts both RIP version 1 and 2 packets.

```
awplus# configure terminal
awplus(config)# interface ppp1
awplus(config-if)# ip rip send version 1-compatible
```

In the following example, the PPP interface `ppp2` is configured to use the RIP version specified by the version (RIP) command.

```
awplus# configure terminal
awplus(config)# interface ppp2
awplus(config-if)# no ip rip send version
```

Related Commands

ip rip send version

version (RIP)

ip rip split-horizon

Overview Use this command to turn on the split-horizon mechanism on the interface.

Use the **no** variant of this command to disable this mechanism.

Syntax

```
ip rip split-horizon [poisoned]
no ip rip split-horizon
```

Parameter	Description
`poisoned`	Performs split-horizon with poison-reverse. See "Usage" below for more information.

Default Split horizon poisoned

Mode Interface Configuration for a VLAN interface or a PPP interface.

Usage Use this command to avoid including routes in updates sent to the same gateway from which they were learned. Without the **poisoned** parameter, using this command causes routes learned from a neighbor to be omitted from updates sent to that neighbor. With the **poisoned** parameter, using this command causes such routes to be included in updates, but sets their metrics to infinity. This advertises that these routes are not reachable.

Example To turn on split horizon poisoned on ppp0, use the following commands:

```
awplus# configure terminal
awplus(config)# interface ppp0
awplus(config-if)# ip rip split-horizon poisoned
```

key

Overview Use this command to manage, add and delete authentication keys in a key-chain.

Use the **no** variant of this command to delete the authentication key.

Syntax

```
key <keyid>
no key <keyid>
```

Parameter	Description
<keyid>	<0-2147483647> Key identifier number.

Mode Keychain Configuration

Usage This command allows you to enter the keychain-key mode where a password can be set for the key.

Example The following example configures a key number 1 and shows the change into a **keychain- key** command mode prompt.

```
awplus# configure terminal
awplus(config)# key chain mychain
awplus(config-keychain)# key 1
awplus(config-keychain-key)#
```

Related Commands

key chain

key-string

accept-lifetime

send-lifetime

key chain

Overview Use this command to enter the key chain management mode and to configure a key chain with a key chain name.

Use the **no** variant of this command to remove the key chain and all configured keys.

Syntax

```
key chain <key-chain-name>
no key chain <key-chain-name>
```

Parameter	Description
<key-chain-name>	Specify the name of the key chain to manage.

Mode Global Configuration

Usage This command allows you to enter the keychain mode from which you can specify keys on this key chain.

Example The following example shows the creation of a key chain named `mychain` and the change into **keychain** mode prompt.

```
awplus# configure terminal
awplus(config)# key chain mychain
awplus(config-keychain)#
```

Related Commands

key

key-string

accept-lifetime

send-lifetime

key-string

Overview Use this command to define the password to be used by a key.

Use the **no** variant of this command to remove a password.

Syntax

```
key-string <key-password>
no key-string
```

Parameter	Description
<key-password>	A string of characters to be used as a password by the key.

Mode Keychain-key Configuration

Usage Use this command to specify passwords for different keys.

Examples In the following example, the password for `key1` in the key chain named `mychain` is set to password **prime**:

```
awplus# configure terminal
awplus(config)# key chain mychain
awplus(config-keychain)# key 1
awplus(config-keychain-key)# key-string prime
```

In the following example, the password for `key1` in the key chain named `mychain` is removed:

```
awplus# configure terminal
awplus(config)# key chain mychain
awplus(config-keychain)# key 1
awplus(config-keychain-key)# no key-string
```

Related Commands

key

key chain

accept-lifetime

send-lifetime

maximum-prefix

Overview Use this command to configure the maximum number of RIP routes stored in the routing table.

Use the **no** variant of this command to disable all limiting of the number of RIP routes stored in the routing table.

Syntax

```
maximum-prefix <maxprefix> [<threshold>]
no maximum-prefix
```

Parameter	Description
<maxprefix>	<1-65535> The maximum number of RIP routes allowed.
<threshold>	<1-100> Percentage of maximum routes to generate a warning. The default threshold is 75%.

Mode Router Configuration

Example To configure the maximum number of RIP routes to 150, use the following command:

```
awplus# configure terminal
awplus(config)# router rip
awplus(config-router)# maximum-prefix 150
```

neighbor (RIP)

Overview Use this command to specify a neighbor router. It is used for each router to which you wish to send unicast RIP updates.

Use the **no** variant of this command to stop sending unicast updates to the specific router.

Syntax

```
neighbor <ip-address>
no neighbor <ip-address>
```

Parameter	Description
<ip-address>	The IP address of a neighboring router with which the routing information will be exchanged.

Default Disabled

Mode Router Configuration

Usage Use this command to exchange nonbroadcast routing information. It can be used multiple times for additional neighbors.

The passive-interface (RIP) command disables sending routing updates on an interface. Use the `neighbor` command in conjunction with the passive-interface (RIP) to send routing updates to specific neighbors.

Example To specify the neighbor router to 1.1.1.1, use the following command:

```
awplus# configure terminal
awplus(config)# router rip
awplus(config-router)# passive-interface vlan1
awplus(config-router)# neighbor 1.1.1.1
```

Related Commands passive-interface (RIP)

network (RIP)

Overview Use this command to activate the transmission of RIP routing information on the defined network.

Use the **no** variant of this command to remove the specified network or VLAN as one that runs RIP.

Syntax

```
network {<network-address>[/<subnet-mask>]|<vlan-name>}
no network {<network-address>[/<subnet-mask>]|<vlan-name>}
```

Parameter	Description
<network-address> *[/<subnet-mask>]*	Specifies the network address to run RIP. Entering a subnet mask (or prefix length) for the network address is optional. Where no mask is entered, the device will attempt to apply a mask that is appropriate to the class (A, B, or C) of the address entered, e.g. an IP address of 10.0.0.0 will have a prefix length of 8 applied to it.
<vlan-name>	Specify a VLAN name with up to 32 alphanumeric characters to run RIP.

Default Disabled

Mode RIP Router Configuration or RIP Router Address Family Configuration for a VRF instance.

Usage Use this command to specify networks, or VLANs, to which routing updates will be sent and received. The connected routes corresponding to the specified network, or VLANs, will be automatically advertised in RIP updates. RIP updates will be sent and received within the specified network or VLAN.

When running VRF-lite, this command can be applied to a VRF instance.

Example Use the following commands to activate RIP routing updates on network 172.16.20.0/24:

```
awplus# configure terminal
awplus(config)# router rip
awplus(config-router)# network 172.16.20.0/24
```

Example (VRF-lite) To activate RIP routing updates on vlan3 for VRF instance 'blue'.

```
awplus# configure terminal
awplus(config)# router rip
awplus(config-router)# address-family ipv4 vrf blue
awplus(config-router-af)# network vlan3
```

Related Commands

show ip rip

show running-config

clear ip rip route

Command changes

Version 5.4.6-2.1: VRF-lite support added.

passive-interface (RIP)

Overview Use this command to block RIP broadcasts on the interface.

Use the **no** variant of this command to disable this function.

Syntax

```
passive-interface <interface>
no passive-interface <interface>
```

Parameter	Description
<interface>	Specifies the interface name.

Default Disabled

Mode RIP Router Configuration or RIP Router Address Family Configuration for a VRF instance.

Example Use the following commands to block RIP broadcasts on vlan20:

```
awplus# configure terminal
awplus(config)# router rip
awplus(config-router)# passive-interface vlan20
```

Example (VRF-lite) To apply this above example to a specific VRF instance named 'green', use the following commands:

```
awplus# configure terminal
awplus(config)# router rip
awplus(config-router)# address-family ipv4 vrf green
awplus(config-router-af)# passive-interface vlan20
```

Related Commands show ip rip

Command changes Version 5.4.6-2.1: VRF-lite support added.

recv-buffer-size (RIP)

Overview Use this command to run-time configure the RIP UDP (User Datagram Protocol) receive-buffer size to improve UDP reliability by avoiding UDP receive buffer overrun.

Use the **no** variant of this command to reset the configured RIP UDP receive-buffer size to the system default (196608 bits).

Syntax

```
recv-buffer-size <8192-2147483647>
no recv-buffer-size [<8192-2147483647>]
```

Parameter	Description
<8192-2147483647>	Specify the RIP UDP (User Datagram Protocol) buffer size value in bits.

Default 196608 bits is the system default when reset using the **no** variant of this command.

Mode Router Configuration

Examples To run-time configure the RIP UDP, use the following commands:

```
awplus# configure terminal
awplus(config)# router rip
awplus(config-router)# recv-buffer-size 23456789
awplus# configure terminal
awplus(config)# router rip
awplus(config-router)# no recv-buffer-size 23456789
```

redistribute (RIP)

Overview Use this command to redistribute information from other routing protocols into RIP.

When using VRF-lite, you can apply this command to a specific VRF instance.

Use the **no** variant of this command to disable the specified redistribution. The parameters **metric** and **routemap** may be used on this command, but have no effect.

Syntax

```
redistribute {connected|static|ospf|bgp} [metric <0-16>]
[routemap <routemap>]
```

```
no redistribute {connected|static|ospf|bgp} [metric] [routemap]
```

Parameter	Description
`routemap`	Optional. Specifies route-map that controls how routes are redistributed.
`<routemap>`	Optional. The name of the route map.
`connected`	Redistribute from connected routes.
`static`	Redistribute from static routes.
`ospf`	Redistribute from Open Shortest Path First (OSPF).
`bgp`	Redistribute from Border Gateway Protocol (BGP).
`metric <0-16>`	Optional. Sets the value of the metric that will be applied to routes redistributed into RIP from other protocols. If a value is not specified, and no value is specified using the default-metric (RIP) command, the default is one.

Default By default, the RIP metric value is set to 1.

Mode RIP Router Configuration or RIP Router Address Family Configuration for a VRF instance.

Example To apply the metric value 15 to static routes being redistributed into RIP, use the commands:

```
awplus# configure terminal
awplus(config)# router rip
awplus(config-router)# redistribute static metric 15
```

Example (VRF-lite)

To apply the metric value 15 to static routes in address-family ipv4 VRF instance `blue` being redistributed into RIP, use the following commands:

```
awplus# configure terminal
awplus(config)# router rip
awplus(config-router)# address-family ipv4 vrf blue
awplus(config-router-af)# redistribute static metric 15
```

Related Commands

default-metric (RIP)

Command changes

Version 5.4.6-2.1: VRF-lite support added.

restart rip graceful

Overview Use this command to force the RIP process to restart, and optionally set the grace-period.

Syntax
```
restart rip graceful [grace-period <1-65535>]
```

Mode Privileged Exec

Default The default RIP grace-period is 60 seconds.

Usage After this command is executed, the RIP process immediately shuts down. It notifies the system that RIP has performed a graceful shutdown. Routes that have been installed into the route table by RIP are preserved until the specified grace-period expires.

When a **restart rip graceful** command is issued, the RIP configuration is reloaded from the last saved configuration. Ensure you first enter the command copy running-config startup-config.

Example To apply a restart rip graceful setting, grace-period to 100 seconds use the following commands:

```
awplus# copy running-config startup-config
awplus# restart rip graceful grace-period 100
```

rip restart grace-period

Overview Use this command to change the grace period of RIP graceful restart.

Use the **no** variant of this command to disable this function.

Syntax

```
rip restart grace-period <1-65535>
no rip restart grace-period <1-65535>
```

Mode Global Configuration

Default The default RIP grace-period is 60 seconds.

Usage Use this command to enable the **Graceful Restart** feature on the RIP process. Entering this command configures a grace period for RIP.

Example

```
awplus# configure terminal
awplus(config)# rip restart grace-period 200
```

route (RIP)

Overview Use this command to add a static RIP route.

Use the **no** variant of this command to remove a static RIP route.

Syntax

```
route <ip-addr/prefix-length>
no route <ip-addr/prefix-length>
```

Parameter	Description
<ip-addr/prefix-length>	The IPv4 address and prefix length.

Default No static RIP route is added by default.

Mode RIP Router Configuration or RIP Router Address Family Configuration for a VRF instance.

Usage Use this command to add a static RIP route. After adding the RIP route, the route can be checked in the RIP routing table.

Example To create a static RIP route to IP subnet 192.168.1.0/24, use the following commands:

```
awplus# configure terminal
awplus(config)# router rip
awplus(config-router)# route 192.168.1.0/24
```

Example (VRF-lite) To create a static RIP route to IP subnet `192.168.1.0/24`, for the VRF instance `red`, use the following commands

```
awplus# configure terminal
awplus(config)# router rip
awplus(config-router)# address-family ipv4 vrf red
awplus(config-router-af)# route 192.168.1.0/24
```

Related Commands show ip rip

clear ip rip route

Command changes Version 5.4.6-2.1: VRF-lite support added.

router rip

Overview Use this global command to enter Router Configuration mode to enable the RIP routing process.

Use the **no** variant of this command to disable the RIP routing process.

Syntax

```
router rip
no router rip
```

Mode Global Configuration

Example This command is used to begin the RIP routing process:

```
awplus# configure terminal
awplus(config)# router rip
awplus(config-router)# version 1
awplus(config-router)# network 10.10.10.0/24
awplus(config-router)# network 10.10.11.0/24
awplus(config-router)# neighbor 10.10.10.10
```

Related Commands network (RIP)

version (RIP)

send-lifetime

Overview Use this command to specify the time period during which the authentication key on a key chain can be sent.

Syntax

```
send-lifetime <start-date> {<end-date>|
duration <seconds>|infinite}
```

```
no send-lifetime
```

Parameter	Description	
<start-date>	Specifies the start time and date in the format: *<hh:mm:ss> <day> <month> <year>* or *<hh:mm:ss> <month> <day> <year>*, where:	
	<hh:mm:ss>	The time of the day, in hours, minutes and seconds
	<day>	<1-31> The day of the month
	<month>	The month of the year (the first three letters of the month, for example, Jan)
	<year>	<1993-2035> The year
<end-date>	Specifies the end time and date in the format: *<hh:mm:ss> <day> <month> <year>* or *<hh:mm:ss> <month> <day> <year>*, where:	
	<hh:mm:ss>	The time of the day, in hours, minutes and seconds
	<day>	<1-31> The day of the month
	<month>	The month of the year (the first three letters of the month, for example, Jan)
	<year>	<1993-2035> The year
<seconds>	<1-2147483646> Duration of the key in seconds.	
infinite	Never expires.	

Mode Keychain-key Configuration

Example The following example shows the setting of send-lifetime for key 1 on the key chain named “mychain”.

```
awplus# configure terminal
awplus(config)# key chain mychain
awplus(config-keychain)# key 1
awplus(config-keychain-key)# send-lifetime 03:03:01 Jan 3 2016
04:04:02 Dec 6 2016
```

Related Commands

key

key-string

key chain

accept-lifetime

show debugging rip

Overview Use this command to display the RIP debugging status for these debugging options: nsm debugging, RIP event debugging, RIP packet debugging and RIP nsm debugging.

For information on filtering and saving command output, see the "Getting Started with AlliedWare Plus" Feature Overview and Configuration Guide.

Syntax
```
show debugging rip
```

Mode User Exec and Privileged Exec

Usage Use this command to display the debug status of RIP.

Example
```
awplus# show debugging rip
```

show ip protocols rip

Overview Use this command to display RIP process parameters and statistics.

For information on filtering and saving command output, see the "Getting Started with AlliedWare Plus" Feature Overview and Configuration Guide.

Syntax

```
show ip protocols rip
```

Mode User Exec and Privileged Exec

Example

```
awplus# show ip protocols rip
```

Output Figure 25-1: Example output from the **show ip protocols rip** command

```
Routing Protocol is "rip"
Sending updates every 30 seconds with +/-50%, next due in 12
seconds
Timeout after 180 seconds, garbage collect after 120 seconds
Outgoing update filter list for all interface is not set
Incoming update filter list for all interface is not set
Default redistribution metric is 1
Redistributing: connected static
Default version control: send version 2, receive version 2
Interface        Send  Recv   Key-chain
   vlan25          2     2
Routing for Networks:
  10.10.0.0/24
Routing Information Sources:
  Gateway          BadPackets BadRoutes  Distance Last Update
Distance: (default is 120
```

show ip rip

Overview Use this command to show RIP routes.

For information on filtering and saving command output, see the "Getting Started with AlliedWare Plus" Feature Overview and Configuration Guide.

Syntax

```
show ip rip
```

Mode User Exec and Privileged Exec

Example

```
awplus# show ip rip
```

Output Figure 25-2: Example output from the **show ip rip** command

```
awplus#show ip rip
Codes: R - RIP, Rc - RIP connected, Rs - RIP static
       C - Connected, S - Static, O - OSPFNetwork        Next Hop
Metric From If    Time
C 10.0.1.0/24             1      vlan20
S 10.10.10.0/24           1      vlan20
C 10.10.11.0/24           1      vlan20
S 192.168.101.0/24        1      vlan20
R 192.192.192.0/24        1      --
```

Related Commands

route (RIP)

network (RIP)

clear ip rip route

show ip rip vrf interface

Command changes Version 5.4.6-2.1: VRF-lite support added.

show ip rip database

Overview Use this command to display information about the RIP database.

For information on filtering and saving command output, see the "Getting Started with AlliedWare Plus" Feature Overview and Configuration Guide.

Syntax

```
show ip rip database [full]
```

Parameter	Description
`full`	Specify the full RIP database including sub-optimal RIP routes.

Mode User Exec and Privileged Exec

Example

```
awplus# show ip rip database
awplus# show ip rip database full
```

Related Commands show ip rip

show ip rip interface

Overview Use this command to display information about the RIP interfaces. You can specify an interface name to display information about a specific interface.

Syntax

```
show ip rip interface [<interface>]
```

Parameter	Description
<interface>	The interface to display information about. For instance: `vlan2`.

Mode User Exec and Privileged Exec

Example

```
awplus# show ip rip interface
```

show ip rip vrf database

Overview Use this command to display information about the RIP database that is associated with a specific VRF instance.

Entering this command with the **full** option included, will display information about the full RIP database (including sub-optimal routes) associated with a specific VRF instance.

For information on filtering and saving command output, see the "Getting Started with AlliedWare Plus" Feature Overview and Configuration Guide.

Syntax

```
show ip rip {vrf <vrf-name>|global} database [full]
```

Parameter	Description
`vrf`	Specific VRF instance.
`<vrf-name>`	The name of the VRF instance.
`global`	The global routing and forwarding table.
`full`	Specify the full RIP database including sub-optimal RIP routes.

Mode User Exec and Privileged Exec

Example To display information about the RIP database associated with a VRF instance 'blue', use the command:

```
awplus# show ip rip vrf blue database
```

Output Figure 25-3: Example output from the **show ip rip vrf blue database** command

```
Codes: R - RIP, Rc - RIP connected, Rs - RIP static
       C - Connected, S - Static, O - OSPF, B - BGP

   Network            Next Hop         Metric From            If       Time
Rc 192.168.30.0/24                         1                  vlan3
R  192.168.45.0/24    192.168.30.1         2 192.168.30.1     vlan3    02:46
```

Related Commands show ip rip

Command changes Version 5.4.6-2.1: VRF-lite support added.

show ip rip vrf interface

Overview Use this command to display information about the RIP interfaces that are associated with a specific VRF instance.

For information on filtering and saving command output, see the "Getting Started with AlliedWare Plus" Feature Overview and Configuration Guide.

Syntax

```
show ip rip {vrf <vrf-name>|global} interface
[<interface-name>]
```

Parameter	Description
`vrf`	Specific VRF instance.
`<vrf-name>`	The name of the VRF instance.
`global`	The global routing and forwarding table.
`<interface-name>`	The IP RIP interface (VLAN).

Mode User Exec and Privileged Exec

Example To display information about the RIP database associated with a VRF instance 'blue', use the command:

```
awplus# show ip rip vrf blue interface
```

Output Figure 25-4: Example output from **show ip rip vrf blue interface vlan3**

```
Codes: R - RIP, Rc - RIP connected, Rs - RIP static
       C - Connected, S - Static, O - OSPF, B - BGP

   Network            Next Hop         Metric From            If       Time
Rc 192.168.30.0/24                           1                vlan3
R  192.168.45.0/24    192.168.30.1 2   192.168.30.1           vlan3    02:46
```

NOTE: *The Time parameter operates as follows:*

- RIP updates occur approximately every 30 seconds.
- Each update resets a count-down timer to 180 seconds (3 minutes).
- The Time parameter displays the count-down from the last reset.

Related Commands show ip rip

Command changes Version 5.4.6-2.1: VRF-lite support added.

timers (RIP)

Overview Use this command to adjust routing network timers.

Use the **no** variant of this command to restore the defaults.

Syntax

```
timers basic <update> <timeout> <garbage>
no timers basic
```

Parameter	Description
<update>	<5-2147483647> Specifies the period at which RIP route update packets are transmitted. The default is 30 seconds.
<timeout>	<5-2147483647> Specifies the routing information timeout timer in seconds. The default is 180 seconds. After this interval has elapsed and no updates for a route are received, the route is declared invalid.
<garbage>	<5-2147483647> Specifies the routing garbage collection timer in seconds. The default is 120 seconds.

Default Enabled

Mode RIP Router Configuration or RIP Router Address Family Configuration for a VRF instance.

Usage This command adjusts the RIP timing parameters.

The update timer is the time between sending out updates, that contain the complete routing table, to every neighboring router.

If an update for a given route has not been seen for the time specified by the timeout parameter, that route is no longer valid. However, it is retained in the routing table for a short time, with metric 16, so that neighbors are notified that the route has been dropped.

When the time specified by the garbage parameter expires the metric 16 route is finally removed from the routing table. Until the garbage time expires, the route is included in all updates sent by the router.

All the routers in the network must have the same timers to ensure the smooth operation of RIP throughout the network.

Examples To set the update timer to 30, the routing information timeout timer to 180, and the routing garbage collection timer to 120, use the following command:

```
awplus# configure terminal
awplus(config)# router rip
awplus(config-router)# timers basic 30 180 120
```

To set the update timer to 30, the routing information timeout timer to 180, and the routing garbage collection timer to 120 with VRF, use the following command:

```
awplus# configure terminal
awplus(config)# router rip
awplus(config-router)# address-family ipv4 vrf blue
awplus(config-router-af)# timers basic 30 180 120
```

Command changes

Version 5.4.6-2.1: VRF-lite support added.

undebug rip

Overview Use this command to disable the options set for debugging information of RIP events, packets and communication between RIP and NSM.

This command has the same effect as the **no debug rip** command.

Syntax `undebug rip {all|events|nsm|<packet>}`

Parameter	Description
`all`	Disables all RIP debugging.
`events`	Disables the logging of RIP events.
`nsm`	Disables the logging of RIP and NSM communication.
<packet>	`packet [recv|send] [detail]` Disables the debugging of RIP packets.
`recv`	Disables the logging of received packet information.
`send`	Disables the logging of sent packet information.
`detail`	Disables the logging of sent or received RIP packets.

Mode Privileged Exec

Example To disable the options set for debugging RIP information events, use the following command:

```
awplus# undebug rip packet
```

Related Commands debug rip

version (RIP)

Overview Use this command to specify a RIP version used globally by the router.

If VRF-lite is configured, you can specify a RIP version either globally, or for a particular VRF instance.

Use the **no** variant of this command to restore the default version.

Syntax

```
version {1|2}
no version
```

Parameter	Description
1|2	Specifies the version of RIP processing.

Default Version 2

Mode RIP Router Configuration or RIP Router Address Family Configuration for a VRF instance.

Usage RIP can be run in version 1 or version 2 mode. Version 2 has more features than version 1; in particular RIP version 2 supports authentication and classless routing. Once the RIP version is set, RIP packets of that version will be received and sent on all the RIP-enabled interfaces.

Setting the version command has no impact on receiving updates, only on sending them. The ip rip send version command overrides the value set by the version (RIP) command on an interface-specific basis. The ip rip receive version command allows you to configure a specific interface to accept only packets of the specified RIP version. The ip rip receive version command and the ip rip send version command override the value set by this command.

Examples To specify a RIP version, use the following commands:

```
awplus# configure terminal
awplus(config)# router rip
awplus(config-router)# version 1
```

To specify a RIP version with VRF, use the following commands:

```
awplus# configure terminal
awplus(config)# router rip
awplus(config-router)# address-family ipv4 vrf blue
awplus(config-router-af)# version 1
```

Related Commands

ip rip receive version

ip rip send version

show running-config

Command changes Version 5.4.6-2.1: VRF-lite support added.

26 RIPng for IPv6 Commands

Introduction

Overview This chapter contains RIPng commands. RIPng (Routing Information Protocol next generation) is an extension of RIPv2 to support IPv6. RFC 2080 specifies RIPng. The differences between RIPv2 and RIPng are:

- RIPng does not support RIP updates authentication
- RIPng does not allow the attachment of arbitrary tags to routes
- RIPng requires the encoding of the next-hop for a set of routes

For more information, see the RIPng Feature Overview and Configuration Guide.

Command List

- "aggregate-address (IPv6 RIPng)" on page 875
- "clear ipv6 rip route" on page 876
- "debug ipv6 rip" on page 877
- "default-information originate (IPv6 RIPng)" on page 878
- "default-metric (IPv6 RIPng)" on page 879
- "distribute-list (IPv6 RIPng)" on page 880
- "ipv6 rip metric-offset" on page 881
- "ipv6 rip split-horizon" on page 883
- "ipv6 router rip" on page 885
- "neighbor (IPv6 RIPng)" on page 886
- "passive-interface (IPv6 RIPng)" on page 887
- "recv-buffer-size (IPv6 RIPng)" on page 888
- "redistribute (IPv6 RIPng)" on page 889
- "route (IPv6 RIPng)" on page 890
- "router ipv6 rip" on page 891

- "show debugging ipv6 rip" on page 892
- "show ipv6 protocols rip" on page 893
- "show ipv6 rip" on page 894
- "show ipv6 rip database" on page 895
- "show ipv6 rip interface" on page 896
- "timers (IPv6 RIPng)" on page 897
- "undebug ipv6 rip" on page 898

aggregate-address (IPv6 RIPng)

Overview Use this command to add an aggregate route to RIPng.

Use the **no** variant of this command to remove the aggregate route from RIPng.

Syntax

```
aggregate-address <ipv6-addr/prefix-length>
no aggregate-address <ipv6-addr/prefix-length>
```

Parameter	Description
<ipv6-addr/prefix-length>	Specify the IPv6 Address in the format *X:X::X:X/Prefix-Length*. The prefix-length is a decimal integer between 1 and 128.

Mode Router Configuration

Usage The route will not be added to the RIPng database unless the database contains at least one route which is contained within the address range covered by the aggregate route. As soon as there are any such component routes in the RIPng database, then the following occurs:

- the aggregate route is added to the RIPng database
- all the component routes that are within the address range covered by the aggregate route are retained in the RIPng database, but are marked as suppressed routes. The aggregate route will be advertised in RIPng updates, and the component route will no longer be advertised.

Note that simply having a component route in the IPv6 route database is not a sufficient condition for the aggregate route to be included into the RIPng database. The component route(s) must be in the RIPng database before the aggregate route will be included in the RIPng database. There is no restriction on the method by which the component routes have arrived into the RIPng database, it can be by being connected RIP interfaces, by redistribution or by direct inclusion using the **route** command in router IPv6 RIP configuration mode.

Example

```
awplus# configure terminal
awplus(config)# router ipv6 rip
awplus(config-router)# aggregate-address 2001:db8::/32
```

clear ipv6 rip route

Overview Use this command to clear specific data from the RIPng routing table.

Syntax
```
clear ipv6 rip route
{<ipv6-addr/prefix-length>|all|connected|rip|static|ospf}
```

Parameter	Description
<ipv6-addr/prefix-length>	Specify the IPv6 Address in format *X:X::X:X/Prefix-Length*. The prefix-length is a decimal integer between 1 and 128. Removes entries which exactly match this destination address from the RIPng routing table.
`connected`	Removes redistributed connected entries from RIPng routing table.
`static`	Removes redistributed static entries from the RIPng routing table.
`rip`	Removes RIPng routes from the RIPng routing table.
`ospf`	Removes redistributed OSPFv3 routes from the RIPng routing table.
`all`	Clears the entire RIPng routing table.

Mode Privileged Exec

Example
```
awplus# clear ipv6 rip route all
awplus# clear ipv6 rip route 2001:db8::/32
```

debug ipv6 rip

Overview Use this command to enable RIPng debugging and specify debugging for RIPng events, RIPng packets, or RIPng communication with NSM processes.

Use the **no** variant of this command to disable RIPng debugging.

Syntax

```
debug ipv6 rip [all|events|nsm|packet [detail]|recv
[detail]|send [detail]]
```

```
no debug ipv6 rip [all|events|nsm|packet [detail]|recv
[detail]|send [detail]]
```

Parameter	Description
`all`	Displays all RIPng debugging showing RIPng events debug information, RIPng received packets information, and RIPng sent packets information.
`events`	Displays RIPng events debug information.
`nsm`	Displays RIPng and NSM communication.
`packet`	Displays RIPng packets only.
`recv`	Displays information for received packets.
`send`	Displays information for sent packets.
`detail`	Displays detailed information for the sent or received packet.

Default RIPng debugging is disabled by default.

Mode Privileged Exec and Global Configuration

Example

```
awplus# debug ipv6 rip events
awplus# debug ipv6 rip packet send detail
awplus# debug ipv6 rip nsm
```

Related Commands undebug ipv6 rip

default-information originate (IPv6 RIPng)

Overview Use this command to generate a default route into RIPng.

Use the **no** variant of this command to disable this feature.

Syntax

```
default-information originate
no default-information originate
```

Default Disabled

Mode Router Configuration

Example

```
awplus# configure terminal
awplus(config)# router ipv6 rip
awplus(config-router)# default-information originate
```

default-metric (IPv6 RIPng)

Overview Use this command to specify the metrics to be assigned to redistributed RIPng routes.

Use the **no** variant of this command to reset the RIPng metric back to its default (1).

Syntax

```
default-metric <1-16>
no default-metric [<1-16>]
```

Parameter	Description
<1-16>	Metric value.

Default By default, the RIPng metric value is set to 1.

Mode Router Configuration

Usage This command is used with the redistribute (IPv6 RIPng) command to make the routing protocol use the specified metric value for all redistributed RIPng routes, regardless of the original protocol that the route has been redistributed from.

Note, this metric is not applied to routes that are brought into RIPng by using the **route** command in router IPv6 RIP configuration mode. This metric is, though, applied to any RIPng aggregate routes that have been brought into the RIPng database due to the presence of a component route that was redistributed into RIPng.

Also note that the default-metric is applied to routes redistributed into RIPng with no metric assignment in the routemap associated with redistribution.

Example

```
awplus# configure terminal
awplus(config)# router ipv6 rip
awplus(config-router)# default-metric 8
```

Related Commands ipv6 rip metric-offset

redistribute (IPv6 RIPng)

distribute-list (IPv6 RIPng)

Overview Use this command to filter incoming or outgoing route updates using the prefix-list.

Use the **no** variant of this command to disable this feature.

Syntax

```
distribute-list [prefix <prefix-list-name>] [in|out]
[<interface>]
```

```
no distribute-list [prefix <prefix-list-name>] [in|out]
[<interface>]
```

Parameter	Description
<prefix-list-name>	Filter prefixes in routing updates. Specify the name of the IPv6 prefix-list to use.
<interface>	The interface for which distribute-list applies. For instance: `vlan2`.
`in`	Filter incoming routing updates.
`out`	Filter outgoing routing updates.

Default Disabled

Mode Router Configuration

Usage Filter out incoming or outgoing route updates using the prefix-list. If you do not specify the name of the interface, the filter is applied to all the interfaces.

Example To filter incoming or outgoing route updates, use the following commands:

```
awplus# configure terminal
awplus(config)# router ipv6 rip
awplus(config-router)# distribute-list prefix myfilter in vlan2
```

Related Commands ipv6 nd prefix

ipv6 rip metric-offset

Overview Use this command to increment the metric value on incoming routes for a specified interface. This command can be used to artificially inflate the metric value for routes learned on the specified interface. Routes learned on the specified interface are only used if the routes to the same destination with a lower metric value in the routing table are down.

Use the **no** variant of this command to reset the metric value on incoming routes to the default value (1). You can set the metric value for redistributed routes with default-metric (IPv6 RIPng) and redistribute (IPv6 RIPng) commands in Router Configuration mode.

Syntax

```
ipv6 rip metric-offset <1-16>
no ipv6 rip metric-offset <1-16>
```

Parameter	Description
<1-16>	Specify an increment to the metric value on an incoming route. The metric value for RIPng routes is the hop count for the route.

Default The default RIPng metric value is 1.

Mode Interface Configuration for a VLAN interface or a PPP interface.

Usage When a RIPng route is received on a VLAN interface, the metric value for the interface set by this command is added to the metric value of the route in the routing table. Note this command only increments the metric for incoming routes on a specified interface. Increasing the metric value for a VLAN interface increases the metric value of routes received on that VLAN interface. This changes the route selected from the routing table.

The RIPng metric is the hop count. At regular intervals of the routing update timer (which has a default value of 30 seconds), and at the time of change in the topology, the RIPng router sends update messages to other routers. The listening routers update their route table with the new route, and increase the metric value of the path by one (referred to as a hop count). The router recognizes the IPv6 address advertising router as the next hop, then sends the routing updates to other routers. A maximum allowable hop count is 15. If a router reaches a metric value of 16 or more, the destination is identified as unreachable.

For information about how AlliedWare Plus adds routes, see the "Route Selection" Feature Overview and Configuration Guide. See also the default-metric (IPv6 RIPng)and redistribute (IPv6 RIPng) commands to specify the metric for redistributed RIPng routes.

Examples

To increment the metric-offset on the VLAN interface vlan2, enter the below commands:

```
awplus# configure terminal
awplus(config)# router ipv6 rip
awplus(config-router)# exit
awplus(config)# interface vlan2
awplus(config-if)# ipv6 rip metric-offset 1
```

To reset the metric-offset on the VLAN interface `vlan2` to the default value, enter the below commands:

```
awplus# configure terminal
awplus(config)# interface vlan2
awplus(config-if)# no ipv6 rip metric-offset 1
```

To increment the metric-offset on the PPP interface `ppp0`, enter the below commands:

```
awplus# configure terminal
awplus(config)# router ipv6 rip
awplus(config-router)# exit
awplus(config)# interface ppp0
awplus(config-if)# ipv6 rip metric-offset
```

To reset the metric-offset on the PPP interface `ppp0` to the default value, enter the below commands:

```
awplus# configure terminal
awplus(config)# interface ppp0
awplus(config-if)# no ipv6 router rip
```

Validation Commands

show running-config

Related Commands

default-metric (IPv6 RIPng)

ipv6 rip split-horizon

Overview Use this command to perform the split-horizon action on the interface. The default is split-horizon with poisoned reverse.

Use the **no** variant of this command to disable this function.

Syntax

```
ipv6 rip split-horizon [poisoned]
no ipv6 rip split-horizon
```

Parameter	Description
`split-horizon`	Perform split-horizon without poisoned reverse
`poisoned`	Performs split-horizon with poisoned reverse.

Default Split-horizon with poisoned reverse is the default.

Mode Interface Configuration for a VLAN interface or a PPP interface.

Usage Use this command to avoid including routes in updates sent to the same gateway from which they were learned. Using the **split horizon** command omits routes learned from one neighbor, in updates sent to that neighbor. Using the **poisoned** parameter with this command includes such routes in updates, but sets their metrics to infinity. Thus, advertising that these routes are not reachable.

Examples To perform split-horizon with poisoned reverse on the VLAN interface `vlan2`, enter the below commands:

```
awplus# configure terminal
awplus(config)# router ipv6 rip
awplus(config-router)# exit
awplus(config)# interface vlan2
awplus(config-if)# ipv6 rip split-horizon poisoned
```

To disable split-horizon on the VLAN interface `vlan2`, enter the below commands:

```
awplus# configure terminal
awplus(config)# interface vlan2
awplus(config-if)# no ipv6 rip split-horizon
```

To perform split-horizon with poisoned reverse on the PPP interface `ppp0`, enter the below commands:

```
awplus# configure terminal
awplus(config)# router ipv6 rip
awplus(config-router)# exit
awplus(config)# interface ppp0
awplus(config-if)# ipv6 rip split-horizon poisoned
```

To disable split-horizon on the PPP interface ppp0, enter the below commands:

```
awplus# configure terminal
awplus(config)# interface ppp0
awplus(config-if)# no ipv6 router rip
```

Validation Commands show running-config

ipv6 router rip

Overview Use this command to enable RIPng routing on an interface.

Use the **no** variant of this command to disable RIPng routing on an interface.

Syntax

```
ipv6 router rip
no ipv6 router rip
```

Default RIPng routing is disabled by default.

Mode Interface Configuration for a VLAN interface or a PPP interface.

Usage This command can only be configured on VLAN interfaces.

Examples To enable RIPng routing on the VLAN interface vlan2, enter the below commands:

```
awplus# configure terminal
awplus(config)# router ipv6 rip
awplus(config-router)# exit
awplus(config)# interface vlan2
awplus(config-if)# ipv6 router rip
```

To disable RIPng routing on the VLAN interface vlan2, enter the below commands:

```
awplus# configure terminal
awplus(config)# interface vlan2
awplus(config-if)# no ipv6 router rip
```

To enable RIPng routing on the PPP interface ppp0, enter the below commands:

```
awplus# configure terminal
awplus(config)# router ipv6 rip
awplus(config-router)# exit
awplus(config)# interface ppp0
awplus(config-if)# ipv6 router rip
```

To disable RIPng routing on the PPP interface ppp0, enter the below commands:

```
awplus# configure terminal
awplus(config)# interface ppp0
awplus(config-if)# no ipv6 router rip
```

neighbor (IPv6 RIPng)

Overview Use this command to specify a neighbor router.

Use the **no** variant of this command to disable the specific router.

Syntax

```
neighbor <ipv6-link-local-addr> <interface>
no neighbor <ipv6-link-local-addr> <interface>
```

Parameter	Description
<ipv6-link-local-addr>	Specify the link-local IPv6 address (in the format *X:X::X:X*) of a neighboring router to exchange routing information with.
<interface>	The interface. For instance: `vlan2`.

Mode Router Configuration

Usage Use this command to exchange non broadcast routing information. It can be used multiple times for additional neighbors.

The passive-interface (IPv6 RIPng) command disables sending routing updates on an interface. Use the `neighbor` command in conjunction with the passive-interface (IPv6 RIPng) command to send routing updates to specific neighbors.

Examples

```
awplus# configure terminal
awplus(config)# router ipv6 rip
awplus(config-router)# neighbor 2001:db8:1::1 vlan2
awplus# configure terminal
awplus(config)# router ipv6 rip
awplus(config-router)# no neighbor 2001:db8:1::1 vlan2
```

Related Commands passive-interface (IPv6 RIPng)

passive-interface (IPv6 RIPng)

Overview Use this command to enable suppression of routing updates on an interface.

Use the **no** variant of this command to disable this function.

Syntax

```
passive-interface <interface>
no passive-interface <interface>
```

Parameter	Description
<interface>	The interface. For instance: `vlan2`.

Default Disabled

Mode Router Configuration

Examples To enable suppression of routing updates, use the following commands:

```
awplus# configure terminal
awplus(config)# router ipv6 rip
awplus(config-router)# passive-interface vlan2
awplus# configure terminal
awplus(config)# router ipv6 rip
awplus(config-router)# no passive-interface vlan2
```

recv-buffer-size (IPv6 RIPng)

Overview Use this command to configure the RIPng UDP (User Datagram Protocol) receive-buffer size. This should improve UDP reliability by avoiding UDP receive buffer overruns.

Use the **no** variant of this command to unset the configured RIPng UDP receive-buffer size and set it back to the system default of 196608 bits.

Syntax

```
recv-buffer-size <8192-2147483647>
no recv-buffer-size [<8192-2147483647>]
```

Default The RIPng UDP receive-buffer-size is 196608 bits by default, and is reset to the default using the **no** variant of this command.

Mode Router Configuration

Examples To configure the RIPng UPD, use the following commands:

```
awplus# configure terminal
awplus(config)# router ipv6 rip
awplus(config-router)# recv-buffer-size 23456789
awplus# configure terminal
awplus(config)# router ipv6 rip
awplus(config-router)# no recv-buffer-size 23456789
awplus# configure terminal
awplus(config)# router ipv6 rip
awplus(config-router)# no recv-buffer-size
```

redistribute (IPv6 RIPng)

Overview Use this command to redistribute information from other routing protocols into RIPng.

Use the **no** variant of this command to disable the specified redistribution. The parameters **metric** and **routemap** may be used on this command, but have no effect.

Syntax

```
redistribute {connected|static|ospf} [metric <0-16>] [route-map
<route-map>]
```

```
no redistribute {connected|static|ospf} [metric <0-16>]
[route-map <route-map>]
```

Parameter	Description
<0-16>	Optional. Specifies the metric value to be used when redistributing information. If a value is not specified, and no value is specified using the default-metric (IPv6 RIPng) command, the default is one.
<route-map>	Optional. Specifies route-map to be used to redistribute information.
`connected`	Redistribute from connected routes.
`static`	Redistribute from static routes.
`ospf`	Redistribute from Open Shortest Path First (OSPF).

Default By default, the RIPng metric value is set to 1.

Mode Router Configuration

Example To redistribute information from other routing protocols into RIPng, use the following commands:

```
awplus# configure terminal
awplus(config)# router ipv6 rip
awplus(config-router)# redistribute static route-map mymap
awplus(config-router)# redistribute static metric 8
```

Related Commands default-metric (IPv6 RIPng)

route (IPv6 RIPng)

Overview Use this command to configure static RIPng routes.

Use the **no** variant of this command to disable this function.

Syntax

```
route <ipv6-addr/prefix-length>
no route <ipv6-addr/prefix-length>
```

Parameter	Description
<ipv6-addr/prefix-length>	Specify the IPv6 Address in format *X:X::X:X/Prefix-Length*. The prefix-length is a decimal integer between 1 and 128.

Mode Router Configuration

Usage Use this command to add a static RIPng route. After adding the RIPng route, the route can be checked in the RIPng routing table.

Example To configure static RIPng routes, use the following commands:

```
awplus# configure terminal
awplus(config)# router ipv6 rip
awplus(config-router)# route 2001:db8::1/64
```

Related Commands

show ipv6 rip

clear ipv6 rip route

router ipv6 rip

Overview Use this global command to enter Router Configuration mode to enable a RIPng routing process.

Use the **no** variant of this command to disable the RIPng routing process.

Syntax

```
router ipv6 rip
no router ipv6 rip
```

Mode Global Configuration

Example To enable a RIPng routing process, use the following commands:

```
awplus# configure terminal
awplus(config)# router ipv6 rip
awplus(config-router)#
```

show debugging ipv6 rip

Overview Use this command to display the RIPng debugging status for the debugging options of: nsm debugging, RIPng event debugging, RIPng packet debugging, and RIPng nsm debugging.

For information on filtering and saving command output, see the "Getting Started with AlliedWare Plus" Feature Overview and Configuration Guide.

Syntax
```
show debugging ipv6 rip
```

Mode User Exec and Privileged Exec

Usage Use this command to display the debug status of RIPng.

Example To display the RIPng debugging status, use the following command:

```
awplus# show debugging ipv6 rip
```

show ipv6 protocols rip

Overview Use this command to display RIPng process parameters and statistics.

For information on filtering and saving command output, see the "Getting Started with AlliedWare Plus" Feature Overview and Configuration Guide.

Syntax

```
show ipv6 protocols rip
```

Mode User Exec and Privileged Exec

Example To display RIPng process parameters and statistics, use the following command:

```
awplus# show ipv6 protocols rip
```

Output

```
awplus#show ipv6 protocols rip
Routing Protocol is "RIPng"
  Sending updates every 30 seconds with +/-5 seconds, next due
in 6 seconds
  Timeout after 180 seconds, garbage collect after 120 seconds
  Outgoing update filter list for all interface is not set
  Incoming update filter list for all interface is not set
  Default redistribute metric is 1
  Redistributing:
  Interface
    vlan3
  Routing for Networks:
    fe80::200:cdff:fe27:c086 vlan1
```

show ipv6 rip

Overview Use this command to show RIPng routes.

For information on filtering and saving command output, see the "Getting Started with AlliedWare Plus" Feature Overview and Configuration Guide.

Syntax

```
show ipv6 rip
```

Mode User Exec and Privileged Exec

Example To display RIPng routes, use the following command:

```
awplus# show ipv6 rip
```

Output

```
Codes: R - RIP, Rc - RIP connected, Rs - RIP static, Ra - RIP
aggregated, Rcx - RIP connect suppressed, Rsx - RIP static
suppressed, C - Connected, S - Static, O - OSPF
   Network           Next Hop         If     Met Tag   Time

R  2001:db8:1::/48   2001:db8:2::/48  vlan3   3   0    02:28
C  2001:db8:3::/48   ::               vlan2   1   0
Ra 2001:db8:4::/48                    --      1   0
Rs 2001:db8:5::/48   2001:db8:1::/48  vlan3   3   0    02:32
Cs 2001:db8:6::/48   ::               vlan3   1   0
```

Related Commands show ipv6 rip database

show ipv6 rip database

Overview Use this command to display information about the RIPng database.

For information on filtering and saving command output, see the "Getting Started with AlliedWare Plus" Feature Overview and Configuration Guide.

Syntax

```
show ipv6 rip database [full]
```

Parameter	Description
`full`	Display all IPv6 RIPng full database entries including sub-optimal routes.

Mode User Exec and Privileged Exec

Example To display information about the RIPng database, use the following command:

```
awplus# show ipv6 rip database
```

Output

```
Codes: R - RIP, Rc - RIP connected, Rs - RIP static, Ra - RIP
aggregated, Rcx - RIP connect suppressed, Rsx - RIP static
suppressed, C - Connected, S - Static, O - OSPF
   Network           Next Hop         If     Met Tag   Time

R  2001:db8:1::/48   2001:db8:2::/48  vlan3   3   0    02:28
C  2001:db8:3::/48   ::               vlan2   1   0
Ra 2001:db8:4::/48                    --      1   0
Rs 2001:db8:5::/48   2001:db8:1::/48  vlan3   3   0    02:32
Cs 2001:db8:6::/48   ::               vlan3   1   0
```

Related Commands show ipv6 rip

show ipv6 rip interface

Overview Use this command to display information about the RIPng interfaces. You can specify an interface name to display information about a specific interface.

For information on filtering and saving command output, see the "Getting Started with AlliedWare Plus" Feature Overview and Configuration Guide.

Syntax

```
show ipv6 rip interface [<interface>]
```

Parameter	Description
<interface>	The interface to display information about. For instance: `vlan2`.

Mode User Exec and Privileged Exec

Example To display RIPng interface information, use the following command:

```
awplus# show ipv6 rip interface
```

Output

```
lo is up, line protocol is up
RIPng is not enabled on this interface
vlan1 is up, line protocol is up
RIPng is not enabled on this interface
vlan2 is down, line protocol is down
RIPng is not enabled on this interface
vlan3 is up, line protocol is up
Routing Protocol: RIPng
Passive interface: Disabled
Split horizon: Enabled with Poisoned Reversed
IP interface address:
2001:db8:1::1/64
2001:db8:1::2/64
```

timers (IPv6 RIPng)

Overview Use this command to adjust the RIPng routing network timers.

Use the **no** variant of this command to restore the defaults.

Syntax

```
timers basic <update> <timeout> <garbage>
no timers basic
```

Parameter	Description
<update>	<5-2147483647> Specifies the RIPng routing table update timer in seconds. The default is 30 seconds.
<timeout>	<5-2147483647> Specifies the RIPng routing information timeout timer in seconds. The default is 180 seconds. After this interval has elapsed and no updates for a route are received, the route is declared invalid.
<garbage>	<5-2147483647> Specifies the RIPng routing garbage collection timer in seconds. The default is 120 seconds.

Default The default RIPng routing table update timer default is 30 seconds, the default RIPng routing information timeout timer is 180 seconds, and the default RIPng routing garbage collection timer is 120 seconds. The **no** variant of this command restores the default RIPng routing timers.

Mode Router Configuration

Example To adjust the RIPng routing network timers, use the following commands:

```
awplus# configure terminal
awplus(config)# router ipv6 rip
awplus(config-router)# timers basic 30 180 120
```

undebug ipv6 rip

Overview Use this command to disable debugging options of RIPng events, RIPng packets, and communication between RIPng and NSM processes.

Syntax

```
undebug ipv6 rip [all|events|nsm|packet [recv|send][detail]]
```

Parameter	Description
`all`	Disables all RIPng debugging.
`events`	Disable the display of RIPng events information.
`nsm`	Disable the display of RIPng and NSM communication.
`packet`	Disable debugging of specified RIPng packets only.
`recv`	Disable the display of information for received packets.
`send`	Disable the display of information for sent packets.
`detail`	Disable the display of detailed information for sent or received packets.

Mode Privileged Exec and Global Configuration

Example To disable debugging options, use the following command:

```
awplus# undebug ipv6 rip events
awplus# undebug ipv6 rip all
awplus# undebug ipv6 rip packet send
awplus# undebug ipv6 rip packet recv detail
```

Related Commands debug ipv6 rip

27 OSPF Commands

Introduction

Overview This chapter provides an alphabetical reference of commands used to configure OSPF. For more information, see the OSPF Feature Overview and Configuration Guide.

Command List

- "area default-cost" on page 902
- "area authentication" on page 903
- "area filter-list" on page 904
- "area nssa" on page 905
- "area range" on page 907
- "area stub" on page 909
- "area virtual-link" on page 910
- "auto-cost reference bandwidth" on page 913
- "bandwidth" on page 915
- "capability opaque" on page 916
- "capability restart" on page 917
- "clear ip ospf process" on page 918
- "compatible rfc1583" on page 919
- "debug ospf events" on page 920
- "debug ospf ifsm" on page 921
- "debug ospf lsa" on page 922
- "debug ospf nfsm" on page 923
- "debug ospf nsm" on page 924
- "debug ospf packet" on page 925

- "debug ospf route" on page 926
- "default-information originate" on page 927
- "default-metric (OSPF)" on page 928
- "distance (OSPF)" on page 929
- "enable db-summary-opt" on page 931
- "host area" on page 932
- "ip ospf authentication" on page 933
- "ip ospf authentication-key" on page 934
- "ip ospf cost" on page 936
- "ip ospf database-filter" on page 937
- "ip ospf dead-interval" on page 938
- "ip ospf disable all" on page 939
- "ip ospf hello-interval" on page 940
- "ip ospf message-digest-key" on page 941
- "ip ospf mtu" on page 943
- "ip ospf mtu-ignore" on page 944
- "ip ospf network" on page 945
- "ip ospf priority" on page 946
- "ip ospf resync-timeout" on page 947
- "ip ospf retransmit-interval" on page 948
- "ip ospf transmit-delay" on page 949
- "max-concurrent-dd" on page 950
- "maximum-area" on page 951
- "neighbor (OSPF)" on page 952
- "network area" on page 953
- "ospf abr-type" on page 955
- "ospf restart grace-period" on page 956
- "ospf restart helper" on page 957
- "ospf router-id" on page 959
- "overflow database" on page 960
- "overflow database external" on page 961
- "passive-interface (OSPF)" on page 962
- "redistribute (OSPF)" on page 963
- "restart ospf graceful" on page 965
- "router ospf" on page 966

- "router-id" on page 968
- "show debugging ospf" on page 969
- "show ip ospf" on page 970
- "show ip ospf border-routers" on page 973
- "show ip ospf database" on page 974
- "show ip ospf database asbr-summary" on page 976
- "show ip ospf database external" on page 977
- "show ip ospf database network" on page 979
- "show ip ospf database nssa-external" on page 980
- "show ip ospf database opaque-area" on page 982
- "show ip ospf database opaque-as" on page 983
- "show ip ospf database opaque-link" on page 984
- "show ip ospf database router" on page 985
- "show ip ospf database summary" on page 987
- "show ip ospf interface" on page 990
- "show ip ospf neighbor" on page 991
- "show ip ospf route" on page 993
- "show ip ospf virtual-links" on page 994
- "show ip protocols ospf" on page 995
- "summary-address" on page 996
- "timers spf exp" on page 997
- "undebug ospf events" on page 998
- "undebug ospf ifsm" on page 999
- "undebug ospf lsa" on page 1000
- "undebug ospf nfsm" on page 1001
- "undebug ospf nsm" on page 1002
- "undebug ospf packet" on page 1003
- "undebug ospf route" on page 1004

area default-cost

Overview This command specifies a cost for the default summary route sent into a stub or NSSA area.

The **no** variant of this command removes the assigned default-route cost.

Syntax

```
area <area-id> default-cost <0-16777215>
no area <area-id> default-cost
```

Parameter	Description	
<area-id>	The OSPF area that you are specifying the default summary route cost for. Use one of the following formats: This can be entered in either dotted decimal format or normal decimal format.	
	<ip-addr>	OSPF Area ID expressed in IPv4 address format A.B.C.D.
	<0-4294967295>	OSPF Area ID expressed as a decimal number within the range shown.
	For example the values dotted decimal 0.0.1.2 and decimal 258 would both define the same area ID.	
default-cost	Indicates the cost for the default summary route used for a stub or NSSA area. Default: **1**	

Mode Router Configuration

Usage The default-cost option provides the metric for the summary default route, generated by the area border router, into the NSSA or stub area. Use this option only on an area border router that is attached to the NSSA or stub area. Refer to the RFC 3101 for information on NSSA.

Example To set the default cost to 10 in area 1 for the OSPF instance 100, use the commands:

```
awplus# configure terminal
awplus(config)# router ospf 100
awplus(config-router)# area 1 default-cost 10
```

Related Commands area nssa

area stub

area authentication

Overview Use this command to enable authentication for an OSPF area. Specifying the area authentication sets the authentication to Type 1 authentication or the Simple Text password authentication (details in RFC 2328).

The **no** variant of this command removes the authentication specification for an area.

Syntax

```
area <area-id> authentication [message-digest]
no area <area-id> authentication
```

Parameter	Description	
<area-id>	The OSPF area that you are enabling authentication for. This can be entered in either dotted decimal format or normal decimal format.	
	<ip-addr>	OSPF Area ID expressed in IPv4 address, entered in the form A.B.C.D.
	<0-4294967295>	OSPF Area ID expressed as a decimal number within the range shown.
	For example the values dotted decimal 0.0.1.2 and decimal 258 would both define the same area OSPF Area ID.	
message-digest	Enables MD5 authentication in the OSPF area.	

Default By default, no authentication occurs.

Mode Router Configuration

Usage All OSPF packets transmitted in this **area** must have the same password in their OSPF header. This ensures that only routers that have the correct password may join the routing domain.

Give all routers that are to communicate with each other through OSPF the same authentication password.

Use the ip ospf authentication-key command to specify a Simple Text password. Use the ip ospf message-digest-key command to specify MD5 password.

Example

```
awplus# configure terminal
awplus(config)# router ospf 100
awplus(config-router)# area 1 authentication
```

Related Commands ip ospf authentication

ip ospf message-digest-key

area filter-list

Overview This command configures filters to advertise summary routes on Area Border Routers (ABR).

This command is used to suppress particular intra-area routes from/to an area to/from the other areas. You can use this command in conjunction with the prefix-list command.

The **no** variant of this command removes the filter configuration.

Syntax

```
area <area-id> filter-list prefix <prefix-list> {in|out}
no area <area-id> filter-list prefix <prefix-list> {in|out}
```

Parameter	Description	
<area-id>	The OSPF area that you are configuring the filter for. Use one of the following formats: This can be entered in either dotted decimal format or normal decimal format.	
	<ip-addr>	OSPF Area ID expressed in IPv4 address format A.B.C.D.
	<0-4294967295>	OSPF Area ID expressed as a decimal number within the range shown.
	For example the values dotted decimal 0.0.1.2 and decimal 258 would both define the same area ID.	
`prefix`	Use prefix-list to filter summary.	
<prefix-list>	Name of a prefix-list.	
`in`	Filter routes from the other areas to this area.	
`out`	Filter routes from this area to the other areas.	

Mode Router Configuration

area nssa

Overview This command sets an area as a Not-So-Stubby-Area (NSSA). By default, no NSSA area is defined.

Use this command to simplify administration if you are connecting a central site using OSPF to a remote site that is using a different routing protocol. You can extend OSPF to cover the remote connection by defining the area between the central router and the remote router as an NSSA.

There are no external routes in an OSPF stub area, so you cannot redistribute from another protocol into a stub area. A NSSA allows external routes to be flooded within the area. These routes are then leaked into other areas. Although, the external routes from other areas still do not enter the NSSA. You can either configure an area to be a stub area or an NSSA, not both.

The **no** variant of this command removes this designation.

Syntax

```
area <area-id> nssa [default-information-originate <metric> |
no-redistribution | no-summary | translator-role <role> ]
```

```
no area <area-id> nssa [default-information-originate |
no-redistribution | no-summary | translator-role ]
```

Parameter	Description	
<area-id>	The OSPF area that you are configuring as an NSSA. Use one of the following formats: This can be entered in either dotted decimal format or normal decimal format.	
	<ip-addr>	OSPF Area ID expressed in IPv4 address format A.B.C.D.
	<0-4294967295>	OSPF Area ID expressed as a decimal number within the range shown.
	For example the values dotted decimal 0.0.1.2 and decimal 258 would both define the same area ID.	
`default-information-originate`	Originate Type-7 default LSA into NSSA.	
<metric>	The external or internal metric. Specify the following:	
	`metric`*<0-16777214>*	The metric value.
	`metric-type`*<1-2>*	External metric type.
`no-redistribution`	Do not redistribute external route into NSSA.	
`no-summary`	Do not inject inter-area route into NSSA.	
`translator-role`	Specify NSSA-ABR translator-role.	

Parameter	Description	
<role>	The role type. Specify one of the following keywords:	
	`always`	Router always translate NSSA-LSA to Type-5 LSA.
	`candidate`	Router may translate NSSA-LSA to Type-5 LSA if it is elected.
	`never`	Router never translate NSSA-LSA.

Mode Router Configuration

Example

```
awplus# configure terminal
awplus(config)# router ospf 100
awplus(config-router)# area 0.0.0.51 nssa
awplus(config-router)# area 3 nssa translator-role candidate
no-redistribution default-information-originate metric 34
metric-type 2
```

Related Commands area default-cost

area range

Overview Use this command to summarize OSPF routes at an area boundary, configuring an IPv4 address range which consolidates OSPF routes. By default, this feature is not enabled.

A summary route created by this command is then advertised to other areas by the Area Border Routers (ABRs). In this way, routing information is condensed at area boundaries and outside the area so that routes are exchanged between areas in an efficient manner.

If the network numbers in an area are arranged into sets of contiguous routes, the ABRs can be configured to advertise a summary route that covers all the individual networks within the area that fall into the specified range.

The **no** variant of this command disables this function and restores default behavior.

Syntax

```
area <area-id> range <ip-addr/prefix-length>
[advertise|not-advertise]
```

```
no area <area-id> range <ip-addr/prefix-length>
```

Parameter	Description	
<area-id>	The OSPF area that you summarizing the routes for. Use one of the following formats: This can be entered in either dotted decimal format or normal decimal format.	
	<ip-addr>	OSPF Area ID expressed in IPv4 address format A.B.C.D.
	<0-4294967295>	OSPF Area ID expressed as a decimal number within the range shown.
	For example the values dotted decimal 0.0.1.2 and decimal 258 would both define the same area ID.	
<ip-addr/prefix-length>	The area range prefix and length.	
`advertise`	Advertise this range as a summary route into other areas.	
`not-advertise`	Does not advertise this range.	

Default The area range is not configured by default. The area range is advertised if it is configured.

Mode Router Configuration

Usage You can configure multiple ranges on a single area with multiple instances of this command, so OSPF summarizes addresses for different sets of IPv4 address ranges.

Ensure OSPF IPv4 routes exist in the area range for advertisement before using this command.

Example

```
awplus# configure terminal
awplus(config)# router ospf 100
awplus(config-router)# area 1 range 192.16.0.0/16
awplus(config-router)# area 1 range 203.18.0.0/16
```

area stub

Overview This command defines an OSPF area as a stub area. By default, no stub area is defined.

Use this command when routers in the area do not require learning about summary LSAs from other areas. You can define the area as a totally stubby area by configuring the Area Border Router of that area using the **area stub no-summary** command.

There are two stub area router configuration commands: the **area stub** and **area default-cost** commands. In all routers attached to the stub area, configure the area by using the **area stub** command. For an area border router (ABR) attached to the stub area, also use the **area default-cost** command.

The **no** variant of this command removes this definition.

Syntax

```
area <area-id>  stub [no-summary]
no area <area-id> stub [no-summary]
```

Parameter	Description	
<area-id>	The OSPF area that you are configuring as a stub area. Use one of the following formats: This can be entered in either dotted decimal format or normal decimal format. For example the values dotted decimal 0.0.1.2 and decimal 258 would both define the same area ID.	
	<ip-addr>	OSPF Area ID expressed in IPv4 address in the format A.B.C.D.
	<0-4294967295>	OSPF Area ID expressed as a decimal number within the range shown.
	For example the values dotted decimal 0.0.1.2 and decimal 258 would both define the same area ID.	
`no-summary`	Stops an ABR from sending summary link advertisements into the stub area.	

Mode Router Configuration

Example

```
awplus# configure terminal
awplus(config)# router ospf 100
awplus(config-router)# area 1 stub
```

Related Commands area default-cost

area virtual-link

Overview This command configures a link between two backbone areas that are physically separated through other non-backbone areas.

In OSPF, all non-backbone areas must be connected to a backbone area. If the connection to the backbone is lost, the virtual link repairs the connection.

The **no** variant of this command removes the virtual link.

Syntax

```
area <area-id> virtual-link <ip-addr> [<auth-key>|<msg-key>]

no area <area-id>  virtual-link <ip-addr>[<auth-key>|<msg-key>]

area <area-id>  virtual-link <ip-addr> authentication
[message-digest|null] [<auth-key>|<msg-key>]

no area <area-id>  virtual-link <ip-addr> authentication
[message-digest|null] [<auth-key>|<msg-key>]

area <area-id>  virtual-link <ip-addr> [authentication]
[dead-interval <1-65535>] [hello-interval <1-65535>]
[retransmit-interval <1-3600>] [transmit-delay <1-3600>]

no area <area-id>  virtual-link <ip-addr>[authentication]
[dead-interval] [hello-interval] [retransmit-interval]
[transmit-delay]
```

Parameter	Description	
<area-id>	The area ID of the transit area that the virtual link passes through. Use one of the following formats: This can be entered in either dotted decimal format or normal decimal format.	
	<ip-addr>	OSPF Area ID expressed in IPv4 address format A.B.C.D.
	<0-4294967295>	OSPF Area ID expressed as a decimal number within the range shown.
	For example the values dotted decimal 0.0.1.2 and decimal 258 would both define the same area ID.	
<ip-address>	The OSPF router ID of the virtual link neighbor.	
<auth-key>	Specifies the password used for this virtual link. Use the format: **authentication-key***<pswd-short>*	
	<pswd-short>	An 8 character password.
<msg-key>	Specifies a message digest key using the MD5 encryption algorithm. Use the following format: **message-digest-key***<1-255>* md5 *<pswd-long>*	
	<1-255>	The key ID.
	<pswd-long>	Authentication password of 16 characters.
`authentication`	Enables authentication on this virtual link.	

Parameter	Description	
`message-digest`	Use message-digest authentication.	
`null`	Use null authentication to override password or message digest.	
`dead-interval`	If no packets are received from a particular neighbor for dead-interval seconds, the router considers that neighboring router as being off-line. Default: 40 seconds	
	<1-65535>	The number of seconds in the interval.
`hello-interval`	The interval the router waits before it sends a hello packet. Default: 10 seconds	
	<1-65535>	The number of seconds in the interval.
`retransmit-interval`	The interval the router waits before it retransmits a packet. Default: 5 seconds	
	<1-3600>	The number of seconds in the interval.
`transmit-delay`	The interval the router waits before it transmits a packet. Default: 1 seconds	
	<1-3600>	The number of seconds in the interval.

Mode Router Configuration

Usage You can configure virtual links between any two backbone routers that have an interface to a common non-backbone area. The protocol treats these two routers, joined by a virtual link, as if they were connected by an unnumbered point-to-point network. To configure a virtual link, you require:

- The transit area ID, i.e. the area ID of the non backbone area that the two backbone routers are both connected to.
- The corresponding virtual link neighbor's router ID. To see the router ID use the show ip ospf command.

Configure the **hello-interval** to be the same for all routers attached to a common network. A short **hello-interval** results in the router detecting topological changes faster but also an increase in the routing traffic.

The **retransmit-interval** is the expected round-trip delay between any two routers in a network. Set the value to be greater than the expected round-trip delay to avoid needless retransmissions.

The **transmit-delay** is the time taken to transmit a link state update packet on the interface. Before transmission, the link state advertisements in the update packet, are incremented by this amount. Set the **transmit-delay** to be greater than zero. Also, take into account the transmission and propagation delays for the interface.

Example

```
awplus# configure terminal
awplus(config)# router ospf 100
awplus(config-router)# area 1 virtual-link 10.10.11.50 hello 5
dead 10
```

Related Commands

area authentication

show ip ospf

show ip ospf virtual-links

auto-cost reference bandwidth

Overview This command controls how OSPF calculates default metrics for the interface.

Use the **no** variant of this command to assign cost based only on the interface bandwidth.

Syntax

```
auto-cost reference-bandwidth <1-4294967>
no auto-cost reference-bandwidth
```

Parameter	Description
<1-4294967>	The reference bandwidth in terms of Mbits per second (Mbps).

Default 1000 Mbps

Usage By default, OSPF calculates the OSPF metric for an interface by dividing the reference bandwidth by the interface bandwidth. The default for the reference bandwidth is 1000 Mbps. As a result, if this default is used, there is very little difference between the metrics applied to interfaces of increasing bandwidth beyond 1000 Mbps.

The auto-cost command is used to alter this reference bandwidth in order to give a real difference between the metrics of high bandwidth links of differing bandwidths. In a network that has multiple links with high bandwidths, specify a larger reference bandwidth value to differentiate the costs on those links.

Cost is calculated by dividing the reference bandwidth (Mbps) by the layer 3 interface (Switched Virtual Interface (SVI), Loopback or Ethernet interface) bandwidth. Interface bandwidth may be altered by using the bandwidth command as the SVI does not auto detect the bandwidth based on the speed of associated switch ports.

When the reference bandwidth calculation results in a cost integer greater than 1 but contains a fractional value (value after the decimal point), the result rounds down to the nearest integer. The following example shows how the cost is calculated.

The reference bandwidth is 1000 Mbps and the interface bandwidth is 7 Mbps.

Calculation = 1000/7

Calculation result = 142.85 (integer of 142, fractional value of 0.85)

Result after rounding down to the nearest integer = 142 (Interface cost is 142)

When the reference bandwidth calculation results in a cost less than 1, it is rounded up to the nearest integer which is 1. The following example shows how the cost is calculated.

The reference bandwidth is 1000 Mbps and the interface bandwidth is 10000 Mbps.

Calculation = 1000/10000

Calculation result = 0.1

Result after rounding up to the nearest integer = 1 (Interface cost is 1)

The auto-cost reference bandwidth value should be consistent across all OSPF routers in the OSPF process.

Note that using the ip ospf cost command on a layer 3 interface will override the cost calculated by this command.

Mode Router Configuration

Example

```
awplus# configure terminal
awplus(config)# router ospf 100
awplus(config-router)# auto-cost reference-bandwidth 1000
```

Related Commands ip ospf cost

bandwidth

Overview Use this command to specify the maximum bandwidth to be used for each VLAN interface. The bandwidth value is in bits per second. OSPF uses this to calculate metrics for the VLAN interface.

The **no** variant of this command removes any applied bandwidth value and replaces it with a value equal to the lowest port speed within that VLAN.

Syntax

```
bandwidth  <bandwidth-setting>
no bandwidth
```

Parameter	Description
<bandwidth-setting>	Sets the bandwidth for the interface. Enter a value in the range 1 to 10000000000 bits per second. Note that to avoid entering many zeros, you can add k, m, or g to internally add 3, 6 or 9 zeros to the number entered. For example entering 1k is the same as entering 1000.

Mode Interface Configuration for a VLAN interface.

Example To set the bandwidth on VLAN2 to be 1 Mbps, use the following commands:

```
awplus# configure terminal
awplus(config)# interface vlan2
awplus(config-if)# bandwidth 1000000
```

Or

```
awplus(config-if)# bandwidth 1m
```

Related Commands show interface

capability opaque

Overview This command enables opaque-LSAs. Opaque-LSAs are Type 9, 10 and 11 LSAs that deliver information used by external applications.

Use the **no** variant of this command to disable opaque-LSAs.

Syntax

```
capability opaque
no capability opaque
```

Default By default, opaque-LSAs are enabled.

Mode Router Configuration

Example

```
awplus# configure terminal
awplus(config)# router ospf 100
awplus(config-router)# no capability opaque
```

capability restart

Overview This command enables OSPF Graceful Restart or restart signaling features. By default, this is enabled.

Use the **no** variant of this command to disable OSPF Graceful Restart and restart signaling features.

Syntax

```
capability restart [graceful|signaling]
no capability restart
```

Parameter	Description
`graceful`	Enable graceful OSPF restart.
`signaling`	Enable OSPF restart signaling.

Default Graceful restart

Mode Router Configuration

Example

```
awplus# configure terminal
awplus(config)# router ospf 100
awplus(config-router)# capability restart graceful
```

clear ip ospf process

Overview This command clears and restarts the OSPF routing process. Specify the Process ID to clear one particular OSPF process. When no Process ID is specified, this command clears all running OSPF processes.

Syntax

```
clear ip ospf [<0-65535>] process
```

Parameter	Description
<0-65535>	The Routing Process ID.

Mode Privileged Exec

Example

```
awplus# clear ip ospf process
```

compatible rfc1583

Overview This command changes the method used to calculate summary route to the that specified in RFC 1583. By default, OSPF uses the method specified in RFC 2328.

RFC 1583 specifies a method for calculating the metric for summary routes based on the minimum metric of the component paths available. RFC 2328 specifies a method for calculating metrics based on maximum cost.

It is possible that some ABRs in an area might conform to RFC 1583 and others support RFC 2328, which could lead to incompatibility in their interoperation. This command addresses this issue by allowing you to selectively disable compatibility with RFC 2328.

Use the **no** variant of this command to disable RFC 1583 compatibility.

Syntax
```
compatible rfc1583
no compatible rfc1583
```

Mode Router Configuration

Example
```
awplus# configure terminal
awplus(config)# router ospf 100
awplus(config-router)# compatible rfc1583
```

debug ospf events

Overview This command enables OSPF debugging for OSPF event troubleshooting.

To enable all debugging options, specify **debug ospf event** with no additional parameters.

The **no** and **undebug** variant of this command disable OSPF debugging. Use this command without parameters to disable all the options.

Syntax

```
debug ospf events [abr] [asbr] [lsa] [nssa] [os] [router]
[vlink]
```

```
no debug ospf events [abr] [asbr] [lsa] [nssa] [os] [router]
[vlink]
```

Parameter	Description
`abr`	Shows ABR events.
`asbr`	Shows ASBR events.
`lsa`	Shows LSA events.
`nssa`	Shows NSSA events.
`os`	Shows OS interaction events.
`router`	Shows other router events.
`vlink`	Shows virtual link events.

Mode Privileged Exec and Global Configuration

Example

```
awplus# debug ospf events asbr lsa
```

Related Commands terminal monitor

undebug ospf events

debug ospf ifsm

Overview This command specifies debugging options for OSPF Interface Finite State Machine (IFSM) troubleshooting.

To enable all debugging options, specify **debug ospf ifsm** with no additional parameters.

The **no** and **undebug** variant of this command disable OSPF IFSM debugging. Use this command without parameters to disable all the options.

Syntax

```
debug ospf ifsm [status] [events] [timers]
no debug ospf ifsm [status] [events] [timers]
```

Parameter	Description
`events`	Displays IFSM event information.
`status`	Displays IFSM status information.
`timers`	Displays IFSM timer information.

Mode Privileged Exec and Global Configuration

Example

```
awplus# no debug ospf ifsm events status
awplus# debug ospf ifsm status
awplus# debug ospf ifsm timers
```

Related Commands terminal monitor

undebug ospf ifsm

debug ospf lsa

Overview This command enables debugging options for OSPF Link State Advertisements (LSA) troubleshooting. This displays information related to internal operations of LSAs.

To enable all debugging options, specify **debug ospf lsa** with no additional parameters.

The **no** and **undebug** variant of this command disable OSPF LSA debugging. Use this command without parameters to disable all the options.

Syntax

```
debug ospf lsa [flooding] [generate] [install] [maxage]
[refresh]
```

```
no debug ospf lsa [flooding] [generate] [install] [maxage]
[refresh]
```

Parameter	Description
`flooding`	Displays LSA flooding.
`generate`	Displays LSA generation.
`install`	Show LSA installation.
`maxage`	Shows maximum age of the LSA in seconds.
`refresh`	Displays LSA refresh.

Mode Privileged Exec and Global Configuration

Examples

```
awplus# undebug ospf lsa refresh
```

Output Figure 27-1: Example output from the **debug ospf lsa** command

```
2002/05/09 14:08:11 OSPF: LSA[10.10.10.10:10.10.10.70]: instance(0x8139cd0)
created with Link State Update
2002/05/09 14:08:11 OSPF: RECV[LS-Upd]: From 10.10.10.70 via vlan5:10.10.10.50
(10.10.10.10 -> 224.0.0.5)
2002/05/09 14:12:33 OSPF: SEND[LS-Upd]: Begin send queue
2002/05/09 14:12:33 OSPF: SEND[LS-Upd]: # of LSAs 1, destination 224.0.0.5
2002/05/09 14:12:33 OSPF: SEND[LS-Upd]: End send queue
2002/05/09 14:12:33 OSPF: SEND[LS-Upd]: To 224.0.0.5 via vlan5:10.10.10.50
```

Related Commands terminal monitor

undebug ospf lsa

debug ospf nfsm

Overview This command enables debugging options for OSPF Neighbor Finite State Machines (NFSMs).

To enable all debugging options, specify **debug ospf nfsm** with no additional parameters.

The **no** and **undebug** variant of this command disable OSPF NFSM debugging. Use this command without parameters to disable all the options.

Syntax

```
debug ospf nfsm [events] [status] [timers]
no debug ospf nfsm [events] [status] [timers]
```

Parameter	Description
`events`	Displays NFSM event information.
`status`	Displays NSFM status information.
`timers`	Displays NFSM timer information.

Mode Privileged Exec and Global Configuration

Examples

```
awplus# debug ospf nfsm events
awplus# no debug ospf nfsm timers
awplus# undebug ospf nfsm events
```

Related Commands terminal monitor

undebug ospf nfsm

debug ospf nsm

Overview This command enables debugging options for the OSPF Network Service Module.

To enable both debugging options, specify **debug ospf nsm** with no additional parameters.

The **no** and **undebug** variant of this command disable OSPF NSM debugging. Use this command without parameters to disable both options.

Syntax

```
debug ospf nsm [interface] [redistribute]
no debug ospf nsm [interface] [redistribute]
```

Parameter	Description
`interface`	Specify NSM interface information.
`redistribute`	Specify NSM redistribute information.

Mode Priviledged Exec and Global Configuration

Examples

```
awplus# debug ospf nsm interface
awplus# no debug ospf nsm redistribute
awplus# undebug ospf nsm interface
```

Related Commands terminal monitor

undebug ospf nsm

debug ospf packet

Overview This command enables debugging options for OSPF packets.

To enable all debugging options, specify **debug ospf packet** with no additional parameters.

The **no** and **undebug** variant of this command disable OSPF packet debugging. Use this command without parameters to disable all options.

Syntax

```
debug ospf packet [dd] [detail] [hello] [ls-ack] [ls-request]
[ls-update] [recv] [send]
```

```
no debug ospf packet [dd] [detail] [hello] [ls-ack] [ls-request]
[ls-update] [recv] [send]
```

Parameter	Description
`dd`	Specifies debugging for OSPF database descriptions.
`detail`	Sets the debug option to detailed information.
`hello`	Specifies debugging for OSPF hello packets.
`ls-ack`	Specifies debugging for OSPF link state acknowledgments.
`ls-request`	Specifies debugging for OSPF link state requests.
`ls-update`	Specifies debugging for OSPF link state updates.
`recv`	Specifies the debug option set for received packets.
`send`	Specifies the debug option set for sent packets.

Mode Privileged Exec and Global Configuration

Examples

```
awplus# debug ospf packet detail
awplus# debug ospf packet dd send detail
awplus# no debug ospf packet ls-request recv detail
awplus# undebug ospf packet ls-request recv detail
```

Related Commands terminal monitor

undebug ospf packet

debug ospf route

Overview This command enables debugging of route calculation. Use this command without parameters to turn on all the options.

To enable all debugging options, specify **debug ospf route** with no additional parameters.

The **no** and **undebug** variant of this command disable OSPF route debugging. Use this command without parameters to disable all options.

Syntax

```
debug ospf route [ase] [ia] [install] [spf]
no debug ospf route [ase] [ia] [install] [spf]
```

Parameter	Description
`ia`	Specifies the debugging of Inter-Area route calculation.
`ase`	Specifies the debugging of external route calculation.
`install`	Specifies the debugging of route installation.
`spf`	Specifies the debugging of SPF calculation.

Mode Privileged Exec and Global Configuration

Examples

```
awplus# debug ospf route
awplus# no debug ospf route ia
awplus# debug ospf route install
awplus# undebug ospf route install
```

Related Commands terminal monitor

undebug ospf route

default-information originate

Overview This command creates a default external route into an OSPF routing domain.

When you use the **default-information originate** command to redistribute routes into an OSPF routing domain, then the system acts like an Autonomous System Boundary Router (ASBR). By default, an ASBR does not generate a default route into the OSPF routing domain.

When using this command, also specify the **route-map** <*route-map*> option to avoid a dependency on the default network in the routing table.

The **metric-type** is an external link type associated with the default route advertised into the OSPF routing domain. The value of the external route could be either Type 1 or 2. The default is Type 2.

The **no** variant of this command disables this feature.

Syntax

```
default-information originate [always] [metric <metric>]
[metric-type <1-2>] [route-map <route-map>]
```

```
no default-information originate [always] [metric]
[metric-type] [route-map]
```

Parameter	Description
`always`	Used to advertise the default route regardless of whether there is a default route.
<metric>	The metric value used in creating the default route. Enter a value in the range 0 to 16777214. The default metric value is 10. The value used is specific to the protocol.
<1-2>	External metric type for default routes, either OSPF External Type 1 or Type 2 metrics. Enter the value 1 or 2.
`route-map`	Specifies to use a specific route-map.
<route-map>	The route-map name. It is a string comprised of any characters, numbers or symbols.

Mode Router Configuration

Example

```
awplus# configure terminal
awplus(config)# router ospf 100
awplus(config-router)# default-information originate always
metric 23 metric-type 2 route-map myinfo
```

Related Commands route-map

default-metric (OSPF)

Overview This command sets default metric values for the OSPF routing protocol.

The **no** variant of this command returns OSPF to using built-in, automatic metric translations, as appropriate for each routing protocol.

Syntax

```
default-metric <1-16777214>
no default-metric [<1-16777214>]
```

Parameter	Description
<1-16777214>	Default metric value appropriate for the specified routing protocol.

Mode Router Configuration

Usage A default metric facilitates redistributing routes even with incompatible metrics. If the metrics do not convert, the default metric provides an alternative and enables the redistribution to continue. The effect of this command is that OSPF will use the same metric value for **all** redistributed routes. Use this command in conjunction with the redistribute (OSPF) command.

Examples

```
awplus# configure terminal
awplus(config)# router ospf 100
awplus(config-router)# default-metric 100
awplus# configure terminal
awplus(config)# router ospf 100
awplus(config-router)# no default-metric
```

Related commands redistribute (OSPF)

distance (OSPF)

Overview This command sets the administrative distance for OSPF routes based on the route type. Your device uses this value to select between two or more routes to the same destination from two different routing protocols. The route with the smallest administrative distance value is added to the Forwarding Information Base (FIB). See the Route Selection Feature Overview and Configuration Guide for more information.

Use the command **distance ospf** to set the distance for an entire category of OSPF routes, rather than the specific routes that pass an access list.

Use the command **distance <1-255>**, with no other parameter, to set the same distance for all OSPF route types.

The **no** variant of this command sets the administrative distance for all OSPF routes to the default of 110.

Syntax

```
distance <1-255>
distance ospf {external <1-255>|inter-area <1-255>|intra-area
<1-255>}
no distance {ospf|<1-255>}
```

Parameter	Description
<1-255>	Specify the Administrative Distance value for OSPF routes.
`external`	Sets the distance for routes from other routing domains, learned by redistribution. Specify an OSPF external distance in the range *<1-255>*.
`inter-area`	Sets the distance for all routes from one area to another area. Specify an OSPF inter-area distance in the range *<1-255>*.
`intra-area`	Sets the distance for all routes within an area. Specify an OSPF intra-area distance in the range *<1-255>*.

Default The default OSPF administrative distance is 110. The default Administrative Distance for each type of route (intra, inter, or external) is 110.

Mode Router Configuration

Usage The administrative distance rates the trustworthiness of a routing information source. The distance could be any integer from 0 to 255. A higher distance value indicates a lower trust rating. For example, an administrative distance of 255 indicates that the routing information source cannot be trusted and should be ignored.

Use this command to set the distance for an entire group of routes, rather than a specific route that passes an access list.

Examples To set the following administrative distances for route types in OSPF 100:

- 20 for inter-area routes

- 10 for intra-area routes
- 40 for external routes

use the commands:

```
awplus(config)# router ospf 100
awplus(config-router)# distance ospf inter-area 20 intra-area
10 external 40
```

To set the administrative distance for all routes in OSPF 100 back to the default of 110, use the commands:

```
awplus(config)# router ospf 100
awplus(config-router)# no distance ospf
```

enable db-summary-opt

Overview This command enables OSPF database summary list optimization.

The **no** variant of this command disables database summary list optimization.

Syntax

```
enable db-summary-opt
no enable db-summary-opt
```

Default The default setting is disabled.

Mode Router Configuration

Usage When this feature is enabled, the database exchange process is optimized by removing the LSA from the database summary list for the neighbor, if the LSA instance in the database summary list is the same as, or less recent than, the listed LSA in the database description packet received from the neighbor.

Examples To enable OSPF database summary list optimization, use the commands:

```
awplus# configure terminal
awplus(config)# router ospf
awplus(config-router)# enable db-summary-opt
```

To disable OSPF database summary list optimization, use the commands:

```
awplus# configure terminal
awplus(config)# router ospf
awplus(config-router)# no enable db-summary-opt
```

Validation Commands show running-config

host area

Overview This command configures a stub host entry belonging to a particular area. You can use this command to advertise specific host routes in the router-LSA as stub link. Since stub host belongs to the specified router, specifying cost is optional.

The **no** variant of this command removes the host area configuration.

Syntax

```
host <ip-address> area <area-id> [cost <0-65535>]
no host <ip-address> area <area-id> [cost <0-65535>]
```

Parameter	Description
<ip-address>	The IPv4 address of the host, in dotted decimal notation.
<area-id>	The OSPF area ID of the transit area that configuring the stub host entry for. Use one of the following formats: • dotted decimal format, e.g. 0.0.1.2. • normal decimal format in the range <0-4294967295>, e.g. 258.
`cost <0-65535>`	The cost for the stub host entry.

Default By default, no host entry is configured.

Mode Router Configuration

Example

```
awplus# configure terminal
awplus(config)# router ospf 100
awplus(config-router)# host 172.16.10.100 area 1
awplus(config-router)# host 172.16.10.101 area 2 cost 10
```

ip ospf authentication

Overview This command sets the authentication method used when sending and receiving OSPF packets on the current VLAN interface. The default is to use no authentication. If no authentication method is specified in this command, then plain text authentication will be used.

The **no** variant of this command disables the authentication.

Syntax

```
ip ospf [<ip-address>] authentication [message-digest|null]
no ip ospf [<ip-address>] authentication
```

Parameter	Description
<ip-address>	The IP address of the interface.
`message-digest`	Use the message digest authentication.
`null`	Use no authentication. It overrides password or message-digest authentication of the interface.

Mode Interface Configuration for a VLAN interface or a PPP interface.

Usage Use the ip ospf authentication command to specify a Simple Text password. Use the ip ospf message-digest-key command to specify MD5 password.

Example In this example, VLAN interface `vlan2` is configured to have no authentication. This will override any text or MD5 authentication configured on this interface.

```
awplus# configure terminal
awplus(config)# interface vlan2
awplus(config-if)# ip ospf authentication null
```

In this example, PPP interface `ppp0` is configured to have no authentication. This will override any text or MD5 authentication configured on this interface.

```
awplus# configure terminal
awplus(config)# interface ppp0
awplus(config-if)# ip ospf authentication null
```

Related Commands

ip ospf authentication-key

area authentication

ip ospf message-digest-key

ip ospf authentication-key

Overview This command specifies an OSPF authentication password for the neighboring routers.

The **no** variant of this command removes the OSPF authentication password.

Syntax

```
ip ospf [<ip-address>] authentication-key <pswd-long>
no ip ospf [<ip-address>] authentication-key
```

Parameter	Description
<ip-address>	The IPv4 address of the interface, in dotted decimal notation.
<pswd-long>	Specifies the authentication password. The string by the end of line will be used.

Default By default, an authentication password is not specified.

Mode Interface Configuration for a VLAN interfaceor a PPP interface.

Usage This command creates a password (key) that is inserted into the OSPF header when AlliedWare Plus™ software originates routing protocol packets. Assign a separate password to each network for different VLAN interfaces. All neighboring routers on the same network with the same password exchange OSPF routing data.

The key can be used only when authentication is enabled for an area. Use the **area authentication** command to enable authentication.

Simple password authentication allows a password to be configured for each area. Configure the routers in the same routing domain with the same password.

Example In the following example, an authentication key test is created on VLAN interface `vlan2` in area 0. Note that first authentication is enabled for area 0.

```
awplus# configure terminal
awplus(config)# router ospf 100
awplus(config-router)# network 10.10.10.0/24 area 0
awplus(config-router)# area 0 authentication
awplus(config-router)# exit
awplus(config)# interface vlan2
awplus(config-if)# ip ospf 3.3.3.3 authentication-key test
```

In the following example, an authentication key test is created on PPP interface `ppp0` in area 0. Note that first authentication is enabled for area 0.

```
awplus# configure terminal
awplus(config)# router ospf 100
awplus(config-router)# network 10.10.10.0/24 area 0
awplus(config-router)# area 0 authentication
awplus(config-router)# exit
awplus(config)# interface ppp0
awplus(config-if)# ip ospf 3.3.3.3 authentication-key test
```

Related Commands

area authentication

ip ospf authentication

ip ospf cost

Overview This command explicitly specifies the cost of the link-state metric in a router-LSA.

The **no** variant of this command resets the VLAN interface cost to the default.

Syntax

```
ip ospf [<ip-address>] cost <1-65535>
no ip ospf [<ip-address>] cost
```

Parameter	Description
<ip-address>	The IPv4 address of the interface, in dotted decimal notation.
<1-65535>	The link-state metric.

Default By default there is no static value set and the OSPF cost is automatically calculated by using the auto-cost reference bandwidth command.

Mode Interface Configuration for a VLAN interface or a PPP interface.

Usage This command explicitly sets a user specified cost of sending packets out the interface. Using this command overrides the cost value calculated automatically with the auto-cost reference bandwidth feature.

The interface cost indicates the overhead required to send packets across a certain VLAN interface. This cost is stated in the Router-LSA's link. Typically, the cost is inversely proportional to the bandwidth of an interface. By default, the cost of a VLAN interface is calculated according to the following formula:

reference bandwidth/interface bandwidth

To set the VLAN interface cost manually, use this command.

Example The following example shows setting ospf cost to 10 on VLAN interface `vlan25` for IP address 10.10.10.50

```
awplus# configure terminal
awplus(config)# interface vlan25
awplus(config-if)# ip ospf 10.10.10.50 cost 10
```

The following example shows setting ospf cost to 10 on PPP interface `ppp0` for IP address 10.10.10.50

```
awplus# configure terminal
awplus(config)# interface ppp0
awplus(config-if)# ip ospf 10.10.10.50 cost 10
```

Related Commands show ip ospf interface

auto-cost reference bandwidth

ip ospf database-filter

Overview This command turns on the LSA database-filter for a particular VLAN interface.

The **no** variant of this command turns off the LSA database-filter.

Syntax

```
ip ospf [<ip-address>] database-filter all out
no ip ospf [<ip-address>] database-filter
```

Parameter	Description
<ip-address>	The IPv4 address of the interface, in dotted decimal notation.

Default By default, all outgoing LSAs are flooded to the interface.

Mode Interface Configuration for a VLAN interface or a PPP interface.

Usage OSPF floods new LSAs over all interfaces in an area, except the interface on which the LSA arrives. This redundancy ensures robust flooding. However, too much redundancy can waste bandwidth and might lead to excessive link and CPU usage in certain topologies, resulting in destabilizing the network. To avoid this, use the **ip ospf database-filter** command to block flooding of LSAs over specified interfaces.

Example

```
awplus# configure terminal
awplus(config)# interface vlan1
awplus(config-if# ip ospf database-filter all out
awplus# configure terminal
awplus(config)# interface ppp0
awplus(config-if# ip ospf database-filter all out
```

ip ospf dead-interval

Overview This command sets the interval during which no hello packets are received and after which a neighbor is declared dead.

The dead-interval is the amount of time that OSPF waits to receive an OSPF hello packet from the neighbor before declaring the neighbor is down. This value is advertised in the router's hello packets. It must be a multiple of the hello-interval and be the same for all routers on a specific network.

The **no** variant of this command returns the interval to the default of 40 seconds. If you have configured this command specifying the IP address of the interface and want to remove the configuration, specify the IP address (**no ip ospf**<*ip-address*> **dead-interval**).

Syntax

```
ip ospf [<ip-address>] dead-interval <1-65535>
no ip ospf [<ip-address>] dead-interval
```

Parameter	Description
<ip-address>	The IPv4 address of the interface, in dotted decimal notation.
<1-65545>	The interval in seconds. Default: 40

Mode Interface Configuration for a VLAN interface or a PPP interface.

Example The following example shows configuring the dead-interval to 10 seconds on the VLAN interface `vlan2`.

```
awplus# configure terminal
awplus(config)# interface vlan2
awplus(config-if)# ip ospf dead-interval 10
```

The following example shows configuring the dead-interval to 10 seconds on the PPP interface `ppp0`.

```
awplus# configure terminal
awplus(config)# interface ppp0
awplus(config-if)# ip ospf dead-interval 10
```

Related Commands ip ospf hello-interval

show ip ospf interface

ip ospf disable all

Overview This command completely disables OSPF packet processing on a VLAN interface. It overrides the network area command and disables the processing of packets on the specific interface.

Use the **no** variant of this command to restore OSPF packet processing on a selected interface.

Syntax

```
ip ospf disable all
no ip ospf disable all
```

Mode Interface Configuration for a VLAN interface or a PPP interface.

Example

```
awplus# configure terminal
awplus(config)# interface vlan2
awplus(config-if)# ip ospf disable all
awplus# configure terminal
awplus(config)# interface ppp0
awplus(config-if)# ip ospf disable all
```

ip ospf hello-interval

Overview This command specifies the interval between hello packets.

The hello-interval is advertised in the hello packets. Configure the same hello-interval for all routers on a specific network. A shorter hello interval ensures faster detection of topological changes, but results in more routing traffic.

The **no** variant of this command returns the interval to the default of 10 seconds.

Syntax

```
ip ospf [<ip-address>] hello-interval <1-65535>
no ip ospf [<ip-address>] hello-interval
```

Parameter	Description
<ip-address>	The IP address of the interface, in dotted decimal notation.
<1-65535>	The interval in seconds. Default: 10

Default The default interval is 10 seconds.

Mode Interface Configuration for a VLAN interface or a PPP interface.

Example The following example shows setting the hello-interval to 3 seconds on VLAN interface vlan2.

```
awplus# configure terminal
awplus(config)# interface vlan2
awplus(config-if)# ip ospf hello-interval 3
```

The following example shows setting the hello-interval to 3 seconds on the PPP interface `ppp0`.

```
awplus# configure terminal
awplus(config)# interface ppp0
awplus(config-if)# ip ospf hello-interval 3
```

Related Commands ip ospf dead-interval

show ip ospf interface

ip ospf message-digest-key

Overview This command registers an MD5 key for OSPF MD5 authentication.

Message Digest Authentication is a cryptographic authentication. A key (password) and key-id are configured on each router. The router uses an algorithm based on the OSPF packet, the key, and the key-id to generate a message digest that gets appended to the packet.

The **no** variant of this command removes the MD5 key.

Syntax

```
ip ospf [<ip-address>] message-digest-key <key-id> md5
<pswd-long>
```

```
no ip ospf [<ip-address>] message-digest-key <key-id>
```

Parameter	Description
<ip-address>	The IPv4 address of the interface, in dotted decimal notation.
<key-id>	A key ID number specified as an integer between 1 and 255.
`md5`	Use the MD5 algorithm.
<pswd-long>	The OSPF password. This is a string of 1 to 16 characters including spaces.

Default By default, there is no MD5 key registered.

Mode Interface Configuration for a VLAN interface or a PPP interface.

Usage Use this command for uninterrupted transitions between passwords. It allows you to add a new key without having to delete the existing key. While multiple keys exist, all OSPF packets will be transmitted in duplicate; one copy of the packet will be transmitted for each of the current keys. This is helpful for administrators who want to change the OSPF password without disrupting communication. The system begins a rollover process until all the neighbors have adopted the new password. This allows neighboring routers to continue communication while the network administrator is updating them with a new password. The router will stop sending duplicate packets once it detects that all of its neighbors have adopted the new password.

Maintain only one password per interface, removing the old password whenever you add a new one. This will prevent the local system from continuing to communicate with the system that is using the old password. Removing the old password also reduces overhead during rollover. All neighboring routers on the same network must have the same password value to enable exchange of OSPF routing data.

Examples The following example shows OSPF authentication on the VLAN interface vlan5 when IP address has not been specified.

```
awplus# configure terminal
awplus(config)# interface vlan5
awplus(config-if)# ip ospf authentication message-digest
awplus(config-if)# ip ospf message-digest-key 1 md5 yourpass
```

The following example shows OSPF authentication on the PPP interface `ppp0` when IP address has not been specified.

```
awplus# configure terminal
awplus(config)# interface ppp0
awplus(config-if)# ip ospf authentication message-digest
awplus(config-if)# ip ospf message-digest-key 1 md5 yourpass
```

The following example shows configuring OSPF authentication on the VLAN interface vlan2 for the IP address 1.1.1.1. (If the interface has two IP addresses assigned-- 1.1.1.1 & 2.2.2.2, OSPF authentication will be enabled only for the IP address 1.1.1.1).

```
awplus# configure terminal
awplus(config)# interface vlan2
awplus(config-if)# ip ospf 1.1.1.1 authentication
message-digest
awplus(config-if)# ip ospf 1.1.1.1 message-digest-key 2 md5
yourpass
```

ip ospf mtu

Overview This command sets the MTU size for OSPF. Whenever OSPF constructs packets, it uses VLAN interface MTU size as Maximum IP packet size. This command forces OSPF to use the specified value, overriding the actual VLAN interface MTU size.

Use the **no** variant of this command to return the MTU size to the default.

Syntax
```
ip ospf mtu <576-65535>
no ip ospf mtu
```

Default By default, OSPF uses interface MTU derived from the VLAN interface.

Mode Interface Configuration for a VLAN interface or a PPP interface.

Usage This command allows an administrator to configure the MTU size recognized by the OSPF protocol. It does not configure the MTU settings on the VLAN interface. OSPF will not recognize MTU size configuration changes made to the kernel until the MTU size is updated through the CLI.

Example
```
awplus# configure terminal
awplus(config)# interface vlan2
awplus(config-if)# ip ospf mtu 1480
awplus# configure terminal
awplus(config)# interface pp0
awplus(config-if)# ip ospf mtu 1480
```

ip ospf mtu-ignore

Overview Use this command to configure OSPF so that OSPF does not check the MTU size during DD (Database Description) exchange.

Use the **no** variant of this command to make sure that OSPF checks the MTU size during DD exchange.

Syntax

```
ip ospf [<ip-address>] mtu-ignore
no ip ospf [<ip-address>] mtu-ignore
```

Parameter	Description
<ip-address>	IPv4 address of the interface, in dotted decimal notation.

Mode Interface Configuration for a VLAN interface or a PPP interface.

Usage By default, during the DD exchange process, OSPF checks the MTU size described in the DD packets received from the neighbor. If the MTU size does not match the interface MTU, the neighbor adjacency is not established. Using this command makes OSPF ignore this check and allows establishing of adjacency regardless of MTU size in the DD packet.

Example

```
awplus# configure terminal
awplus(config)# interface vlan2
awplus(config-if)# ip ospf mtu-ignore
awplus# configure terminal
awplus(config)# interface ppp0
awplus(config-if)# ip ospf mtu-ignore
```

ip ospf network

Overview This command configures the OSPF network type to a type different from the default for the particular VLAN interface.

The **no** variant of this command returns the network type to the default for the particular VLAN interface.

Syntax

```
ip ospf network [broadcast|non-broadcast|point-to-point|
point-to-multipoint]
```

```
no ip ospf network
```

Parameter	Description
`broadcast`	Sets the network type to broadcast.
`non-broadcast`	Sets the network type to NBMA.
`point-to-multipoint`	Sets the network type to point-to-multipoint.
`point-to-point`	Sets the network type to point-to-point.

Default The default is the `broadcast` OSPF network type for a VLAN interface.

Mode Interface Configuration for a VLAN interface or a PPP interface.

Usage This command forces the interface network type to the specified type. Depending on the network type, OSPF changes the behavior of the packet transmission and the link description in LSAs.

Example The following example shows setting the network type to point-to-point on the VLAN interface vlan2.

```
awplus# configure terminal
awplus(config)# interface vlan2
awplus(config-if)# ip ospf network point-to-point
```

The following example shows setting the network type to point-to-point on the PPP interface ppp0.

```
awplus# configure terminal
awplus(config)# interface ppp0
awplus(config-if)# ip ospf network point-to-point
```

ip ospf priority

Overview This command sets the router priority, which is a parameter used in the election of the designated router for the network.

The **no** variant of this command returns the router priority to the default of 1.

Syntax

```
ip ospf [<ip-address>] priority <priority>
no ip ospf [<ip-address>] priority
```

Parameter	Description
<ip-address>	The IP address of the interface.
<priority>	*<0-255>* Specifies the Router Priority of the interface.

Default The router priority for an interface is set to 1 by default.

Mode Interface Configuration for a VLAN interface or a PPP interface.

Usage Set the priority to help determine the OSPF Designated Router (DR) for a network. If two routers attempt to become the DR, the router with the higher router priority becomes the DR. If the router priority is the same for two routers, the router with the higher router ID takes precedence.

Only routers with nonzero router priority values are eligible to become the designated or backup designated router.

Configure router priority for multi-access networks only and not for point-to-point networks.

Example The following example shows setting the OSPF priority value to 3 on the VLAN interface `vlan2`.

```
awplus# configure terminal
awplus(config)# interface vlan2
awplus(config-if)# ip ospf priority 3
```

The following example shows setting the OSPF priority value to 3 on the PPP interface `ppp0`.

```
awplus# configure terminal
awplus(config)# interface ppp0
awplus(config-if)# ip ospf priority 3
```

Related Commands ip ospf network

ip ospf resync-timeout

Overview Use this command to set the interval after which adjacency is reset if out-of-band resynchronization has not occurred. The interval period starts from the time a restart signal is received from a neighbor.

Use the **no** variant of this command to return to the default.

Syntax

```
ip ospf [<ip-address>] resync-timeout <1-65535>
no ip ospf [<ip-address>] resync-timeout
```

Parameter	Description
<ip-address>	The IP address of the interface.
<1-65535>	Specifies the resynchronization timeout value of the interface in seconds.

Mode Interface Configuration for a VLAN interface or a PPP interface.

Example The following example shows setting the OSPF resynchronization timeout value to 65 seconds on the VLAN interface `vlan2`.

```
awplus# configure terminal
awplus(config)# interface vlan2
awplus(config-if)# ip ospf resync-timeout 65
```

The following example shows setting the OSPF resynchronization timeout value to 65 seconds on the PPP interface `ppp0`.

```
awplus# configure terminal
awplus(config)# interface ppp0
awplus(config-if)# ip ospf resync-timeout 65
```

ip ospf retransmit-interval

Overview Use this command to specify the time between link-state advertisement (LSA) retransmissions for adjacencies belonging to the interface.

Use the **no** variant of this command to return to the default of 5 seconds.

Syntax

```
ip ospf [<ip-address>] retransmit-interval <1-65535>
no ip ospf [<ip-address>] retransmit-interval
```

Parameter	Description
<ip-address>	The IP address of the interface.
<1-65535>	Specifies the interval in seconds.

Default The default interval is 5 seconds.

Mode Interface Configuration for a VLAN interface or a PPP interface.

Usage After sending an LSA to a neighbor, the router keeps the LSA until it receives an acknowledgment. In case the router does not receive an acknowledgment during the set time (the retransmit interval value) it retransmits the LSA. Set the retransmission interval value conservatively to avoid needless retransmission. The interval should be greater than the expected round-trip delay between two routers.

Example The following example shows setting the `ospf retransmit interval` to 6 seconds on the VLAN interface `vlan2`.

```
awplus# configure terminal
awplus(config)# interface vlan2
awplus(config-if)# ip ospf retransmit-interval 6
```

The following example shows setting the `ospf retransmit interval` to 6 seconds on the PPP interface `ppp0`.

```
awplus# configure terminal
awplus(config)# interface ppp0
awplus(config-if)# ip ospf retransmit-interval 6
```

ip ospf transmit-delay

Overview Use this command to set the estimated time it takes to transmit a link-state-update packet on the VLAN interface.

Use the **no** variant of this command to return to the default of 1 second.

Syntax

```
ip ospf [<ip-address>] transmit-delay <1-65535>
no ip ospf [<ip-address>] transmit-delay
```

Parameter	Description
<ip-address>	The IP address of the VLAN interface.
<1-65535>	Specifies the time, in seconds, to transmit a link-state update.

Default The default interval is 1 second.

Mode Interface Configuration for a VLAN interface or a PPP interface.

Usage The transmit delay value adds a specified time to the age field of an update. If the delay is not added, the time in which the LSA transmits over the link is not considered. This command is especially useful for low speed links. Add transmission and propagation delays when setting the transmit delay value.

Example The following example shows setting the OSPF transmit delay time to 3 seconds on the VLAN interface `vlan2`.

```
awplus# configure terminal
awplus(config)# interface vlan2
awplus(config-if)# ip ospf transmit-delay 3
```

The following example shows setting the OSPF transmit delay time to 3 seconds on the PPP interface `ppp0`.

```
awplus# configure terminal
awplus(config)# interface ppp0
awplus(config-if)# ip ospf transmit-delay 3
```

max-concurrent-dd

Overview Use this command to set the limit for the number of Database Descriptors (DD) that can be processed concurrently.

Use the **no** variant of this command to reset the limit for the number of Database Descriptors (DD) that can be processed concurrently.

Syntax

```
max-concurrent-dd <1-65535>
no max-concurrent-dd
```

Parameter	Description
<1-65535>	Specify the number of DD processes.

Mode Router Configuration

Usage This command is useful when a router's performance is affected from simultaneously bringing up several OSPF adjacencies. This command limits the maximum number of DD exchanges that can occur concurrently per OSPF instance, thus allowing for all of the adjacencies to come up.

Example The following example sets the max-concurrent-dd value to 4, so that only 4 DD exchanges will be processed at a time.

```
awplus# configure terminal
awplus(config)# router ospf 100
awplus(config-router# max-concurrent-dd 4
```

maximum-area

Overview Use this command to set the maximum number of OSPF areas.

Use the **no** variant of this command to set the maximum number of OSPF areas to the default.

Syntax

```
maximum-area <1-4294967294>
no maximum-area
```

Parameter	Description
<1-4294967294>	Specify the maximum number of OSPF areas.

Default The default for the maximum number of OSPF areas is 4294967294.

Mode Router Configuration

Usage Use this command in router OSPF mode to specify the maximum number of OSPF areas.

Examples The following example sets the maximum number of OSPF areas to 2:

```
awplus# configure terminal
awplus(config)# router ospf 100
awplus(config-router)# maximum-area 2
```

The following example removes the maximum number of OSPF areas and resets to default:

```
awplus# configure terminal
awplus(config)# router ospf 100
awplus(config-router)# no maximum-area
```

neighbor (OSPF)

Overview Use this command to inform the router of other neighboring routers that are connected to the same NBMA network.

Use the **no** variant of this command to remove a configuration.

Syntax

```
neighbor <ip-address> [<cost>]{<priority>|<poll-interval>}
no neighbor <ip-address> [<cost>]{<priority>|<poll-interval>}
```

Parameter	Description
<ip-address>	Specifies the interface IP address of the neighbor.
<priority>	*priority <0-255>* Specifies the router priority value of the non-broadcast neighbor associated with the specified IP address. The default is 0. This keyword does not apply to point-to-multipoint interfaces.
<poll-interval>	*poll-interval <1-2147483647>* Dead neighbor polling interval in seconds. It is recommended to set this value much higher than the hello interval. The default is 120 seconds.
<cost>	*cost <1-65535>* Specifies the link-state metric to this neighbor.

Mode Router Configuration

Usage To configure a neighbor on an NBMA network manually, use the `neighbor` command and include one neighbor entry for each known nonbroadcast network neighbor. The IP address used in this command is the neighbor's primary IP address on the interface where that neighbor connects to the NBMA network.

The poll interval is the reduced rate at which routers continue to send hello packets, when a neighboring router has become inactive. Set the poll interval to be much larger than hello interval.

Examples This example shows a neighbor configured with a priority value, poll interval time, and cost.

```
awplus# configure terminal
awplus(config)# router ospf 100
awplus(config-router)# neighbor 1.2.3.4 priority 1
poll-interval 90
awplus(config-router)# neighbor 1.2.3.4 cost 15
```

network area

Overview Use this command to enable OSPF routing with a specified Area ID on any interfaces with IP addresses that match the specified network address.

Use the **no** variant of this command to disable OSPF routing on the interfaces.

Syntax

```
network <network-address> area <area-id>
no network <network-address> area <area-id>
```

Parameter		Description
<network-address>		*{<ip-network/m>|<ip-addr> <reverse-mask>}*
	<ip-network/m>	IP address of the network, entered in the form A.B.C.D/M. Dotted decimal notation followed by a forward slash, and then the subnet mask length.
	<ip-addr> <reverse-mask>	IPv4 network address, entered in the form A.B.C.D, followed by the mask. Enter the mask as a wildcard, or reverse, mask (e.g. 0.0.0.255). Note that the device displays the mask as a subnet mask in the running configuration.
<area-id>		*{<ip-addr>|<0-4294967295>}*
	<ip-addr>	OSPF Area ID in IPv4 address format, in the form A.B.C.D.
	<0-4294967295>	OSPF Area ID as 4 octets unsigned integer value.

Default No **network area** is configured by default.

Mode Router Configuration

Usage OSPF routing can be enabled per IPv4 subnet. The network address can be defined using either the prefix length or a wild card mask. A wild card mask is comprised of consecutive `0's` as network bits and consecutive `1's` as host bits.

Examples The following commands show the use of the **network area** command with OSPF multiple instance support disabled:

```
awplus# configure terminal
awplus(config)# router ospf 100
awplus(config-router)# network 10.0.0.0/8 area 3
awplus(config-router)# network 10.0.0.0/8 area 1.1.1.1
```

The following commands disable OSPF routing with Area ID 3 on all interfaces:

```
awplus# configure terminal
awplus(config)# router ospf 100
awplus(config-router)# no network 10.0.0.0/8 area3
```

ospf abr-type

Overview Use this command to set an OSPF Area Border Router (ABR) type.

Use the **no** variant of this command to revert the ABR type to the default setting (Cisco).

Syntax

```
ospf abr-type {cisco|ibm|standard}
no ospf abr-type {cisco|ibm|standard}
```

Parameter	Description
`cisco`	Specifies an alternative ABR using Cisco implementation (RFC 3509). This is the default ABR type.
`ibm`	Specifies an alternative ABR using IBM implementation (RFC 3509).
`standard`	Specifies a standard behavior ABR (RFC 2328).

Default ABR type `Cisco`

Mode Router Configuration

Usage Specifying the ABR type allows better interoperation between different implementations. This command is specially useful in a multi-vendor environment. The different ABR types are:

- Cisco ABR Type: By this definition, a router is considered an ABR if it has more than one area actively attached and one of them is the backbone area.
- IBM ABR Type: By this definition, a router is considered an ABR if it has more than one area actively attached and the backbone area is configured. In this case the configured backbone need not be actively connected.
- Standard ABR Type: By this definition, a router is considered an ABR if it has more than one area actively attached to it.

Example

```
awplus# configure terminal
awplus(config)# router ospf 100
awplus(config-router)# ospf abr-type ibm
```

ospf restart grace-period

Overview Use this command to configure the grace-period for restarting OSPF routing.

Use the **no** variant of this command to revert to the default grace-period.

Syntax

```
ospf restart grace-period <1-1800>
no ospf restart grace-period
```

Parameter	Description
<1-1800>	Specifies the grace period in seconds.

Default In the AlliedWare Plus™ OSPF implementation, the default OSPF grace-period is 180 seconds.

Mode Global Configuration

Usage Use this command to enable the OSPF Graceful Restart feature and set the restart grace-period. Changes from the default restart grace-period are displayed in the running- config. The restart grace-period is not displayed in the running-config if it has been reset to the default using the **no** variant of this command.

Example To set the OSPF restart grace-period to 250 seconds, use the commands:

```
awplus# configure terminal
awplus(config)# ospf restart grace-period 250
```

To reset the OSPF restart grace-period to the default (180 seconds), use the commands:

```
awplus# configure terminal
awplus(config)# no ospf restart grace-period
```

Validation Commands show running-config

Related Commands ospf restart helper

restart ospf graceful

ospf restart helper

Overview Use this command to configure the **helper** behavior for the OSPF Graceful Restart feature.

Use the **no** variant of this command to revert to the default grace-period.

Syntax

```
ospf restart helper {max-grace-period
<grace-period>|only-reload|only-upgrade}
ospf restart helper {never router-id <router-id>}
no ospf restart helper [max-grace-period]
```

Parameter	Description
`max-grace-period`	Specify help if received grace-period is less than a specified value.
<grace-period>	Maximum grace period accepted in seconds in range *<1-1800>*.
`never`	Specify the local policy to never to act as a helper for this feature.
`only-reload`	Specify help only on software reloads not software upgrades.
`only-upgrade`	Specify help only on software upgrades not software reloads.
`router-id`	Enter the router-id keyword to specify the OSPF Router ID that is never to act as a helper for the OSPF Graceful Restart feature.
<router-id>	*<A.B.C.D>* Specify the OSPF Router ID in dotted decimal format A.B.C.D

Default In the AlliedWare Plus™ OSPF implementation, the default OSPF grace-period is 180 seconds.

Mode Global Configuration

Usage The **ospf restart helper** command requires at least one parameter, but you may use more than one in the same command (excluding parameter **never**).

The **no** version of this command turns off the OSPF restart helper, while the **no ospf restart helper max-grace-period** command resets the max-grace-period, rather than the helper policy itself.

Example

```
awplus# configure terminal
awplus(config)# ospf restart helper only-reload
awplus# configure terminal
awplus(config)# ospf restart helper never router-id 10.10.10.1
awplus# configure terminal
awplus(config)# no ospf restart helper max-grace-period
```

Related Commands

ospf restart grace-period

restart ospf graceful

ospf router-id

Overview Use this command to specify a router ID for the OSPF process.

Use the **no** variant of this command to disable this function.

Syntax

```
ospf router-id <ip-address>
no ospf router-id
```

Parameter	Description
<ip-address>	Specifies the router ID in IPv4 address format.

Mode Router Configuration

Usage Configure each router with a unique router-id. In an OSPF router process that has active neighbors, a new router-id takes effect at the next reload or when you restart OSPF manually.

Example The following example shows a specified router ID 2.3.4.5.

```
awplus# configure terminal
awplus(config)# router ospf 100
awplus(config-router)# ospf router-id 2.3.4.5
```

Related Commands show ip ospf

overflow database

Overview Use this command to limit the maximum number of Link State Advertisements (LSAs) that can be supported by the current OSPF instance.

Use the **no** variant of this command to have no limit on the maximum number of LSAs.

Syntax

```
overflow database <0-4294967294> {hard|soft}
no overflow database
```

Parameter	Description
<0-4294967294>	The maximum number of LSAs.
`hard`	Shutdown occurs if the number of LSAs exceeds the specified value.
`soft`	Warning message appears if the number of LSAs exceeds the specified value.

Mode Router Configuration

Usage Use **hard** with this command if a shutdown is required if the number of LSAs exceeds the specified number. Use **soft** with this command if a shutdown is not required, but a warning message is required, if the number of LSAs exceeds the specified number.

Example The following example shows setting the database overflow to 500, and a shutdown to occur, if the number of LSAs exceeds 500.

```
awplus# configure terminal
awplus(config)# router ospf 100
awplus(config-router)# overflow database 500 hard
```

overflow database external

Overview Use this command to configure the size of the external database and the time the router waits before it tries to exit the overflow state.

Use the **no** variant of this command to revert to default.

Syntax

```
overflow database external <max-lsas> <recover-time>
no overflow database external
```

Parameter	Description
<max-lsas>	*<0-2147483647>* The maximum number of Link State Advertisements (LSAs). Note that this value should be the same on all routers in the AS.
<recover-time>	*<0-65535>* the number of seconds the router waits before trying to exit the database overflow state. If this parameter is 0, router exits the overflow state only after an explicit administrator command.

Mode Router Configuration

Usage Use this command to limit the number of AS-external-LSAs a router can receive, once it is in the wait state. It takes the number of seconds specified as the *<recover-time>* to recover from this state.

Example The following example shows setting the maximum number of LSAs to 5 and the time to recover from overflow state to be 3:

```
awplus# configure terminal
awplus(config)# router ospf 100
awplus(config-router)# overflow database external 50 3
```

passive-interface (OSPF)

Overview Use this command to suppress the sending of Hello packets on all interfaces, or on a specified interface. If you use the **passive-interface** command without the optional parameters then **all** interfaces are put into passive mode.

Use the **no** variant of this command to allow the sending of Hello packets on all interfaces, or on the specified interface. If you use the **no** variant of this command without the optional parameters then **all** interfaces are removed from passive mode.

Syntax

```
passive-interface [<interface>][<ip-address>]
no passive-interface [<interface>][<ip-address>]
```

Parameter	Description
<interface>	The name of the interface.
<ip-address>	IP address of the interface, entered in the form A.B.C.D.

Mode Router Configuration

Usage Configure an interface to be passive if you wish its connected route to be treated as an OSPF route (rather than an AS-external route), but do not wish to actually exchange any OSPF packets via this interface.

Examples To configure passive interface mode on **all** interfaces, enter the following commands:

```
awplus(config)# router ospf 100
awplus(config-router)# passive-interface
```

To remove passive interface mode on interface vlan2, enter the following commands:

```
awplus(config)# router ospf 100
awplus(config-router)# no passive-interface vlan2
```

To remove passive interface mode on **all** interfaces, enter the following commands:

```
awplus(config)# router ospf 100
awplus(config-router)# no passive-interface
```

redistribute (OSPF)

Overview Use this command to redistribute routes from other routing protocols, static routes and connected routes into an OSPF routing table.

Use the **no** variant of this command to disable this function.

Syntax

```
redistribute {bgp|connected|rip|static} {metric
<0-16777214>|metric-type {1|2}|route-map <name>|tag
<0-4294967295>}
```

```
no redistribute {bgp|connected|rip|static} {metric
<0-16777214>|metric-type {1|2}|route-map <name>|tag
<0-4294967295>}
```

Parameter	Description
`bgp`	Specifies that this applies to the redistribution of BGP routes.
`connected`	Specifies that this applies to the redistribution of connected routes.
`rip`	Specifies that this applies to the redistribution of RIP routes.
`static`	Specifies that this applies to the redistribution of static routes.
`metric`	Specifies the external metric.
`metric-type`	Specifies the external metric-type.
`route-map`	Specifies name of the route-map.
`tag`	Specifies the external route tag.

Default The default metric value for routes redistributed into OSPF is 20. The metric can also be defined using the set metric command for a route map. Note that a metric defined using the set metric command for a route map overrides a metric defined with this command.

Mode Router Configuration

Usage You use this command to inject routes, learned from other routing protocols, into the OSPF domain to generate AS-external-LSAs. If a route-map is configured by this command, then that route-map is used to control which routes are redistributed and can set metric and tag values on particular routes.

The metric, metric-type, and tag values specified on this command are applied to any redistributed routes that are not explicitly given a different metric, metric-type, or tag value by the route map.

See the OSPF Feature Overview and Configuration Guide for more information about metrics, and about behavior when configured in route maps.

Note that this command does not redistribute the default route. To redistribute the default route, use the default-information originate command.

Example The following example shows the configuration of a route-map named `rmap2`, which is then applied using the **redistribute route-map** command, so routes learned via interface vlan1 can be redistributed as type-1 external LSAs:

```
awplus# configure terminal
awplus(config)# route-map rmap2 permit 3
awplus(config-route-map)# match interface vlan1
awplus(config-route-map)# set metric-type 1
awplus(config-route-map)# exit
awplus(config)# router ospf 100
awplus(config-router)# redistributebgp rip route-map rmap2
```

Note that configuring a route-map and applying it with the **redistribute route-map** command allows you to filter which routes are distributed from another routing protocol (such as RIP). A route-map can also set the metric, tag, and metric-type of the redistributed routes.

Related Commands

match interface

route-map

show ip ospf database external

restart ospf graceful

Overview Use this command to force the OSPF process to restart, and optionally set the grace-period.

Syntax

```
restart ospf graceful [grace-period <1-1800>]
```

Parameter	Description
`grace-period`	Specify the grace period.
<1-1800>	The grace period in seconds.

Default In the AlliedWare Plus™ OSPF implementation, the default OSPF grace-period is 180 seconds.

Mode Privileged Exec

Usage After this command is executed, the OSPF process immediately shuts down. It notifies the system that OSPF has performed a graceful shutdown. Routes installed by OSPF are preserved until the grace-period expires.

When a **restart ospf graceful** command is issued, the OSPF configuration is reloaded from the last saved configuration. Ensure you first enter the command copy running-config startup-config.

Example

```
awplus# copy running-config startup-config
awplus# restart ospf graceful grace-period 200
```

Related Commands ospf restart grace-period

ospf restart helper

router ospf

Overview Use this command to enter Router Configuration mode to configure an OSPF routing process. You must specify the process ID with this command for multiple OSPF routing processes on the device.

Use the **no** variant of this command to terminate an OSPF routing process.

Use the **no** parameter with the **process-id** parameter, to terminate and delete a specific OSPF routing process. If no **process-id** is specified on the **no** variant of this command, then all OSPF routing processes are terminated, and all OSPF configuration is removed.

Syntax

```
router ospf [<process-id>]
no router ospf [<process-id>]
```

Syntax (VRF-lite)

```
router ospf [<process-id>] [<vrf-instance>]
no router ospf [<process-id>]
```

Parameter	Description
<process-id>	A positive number from 1 to 65535, that is used to define a routing process.
<vrf-instance>	The VRF instance to be associated with the OSPF routing process.

Default No routing process is defined by default.

Mode Global Configuration

Usage The process ID of OSPF is an optional parameter for the **no** variant of this command only. When removing all instances of OSPF, you do not need to specify each Process ID, but when removing particular instances of OSPF you must specify each Process ID to be removed.

When using VRF-lite, this command can be used to associate a process-id with a VRF instance that has been created using the ip vrf command.

Example To enter Router Configuration mode to configure an existing OSPF routing process `100`, use the commands:

```
awplus# configure terminal
awplus(config)# router ospf 100
awplus(config-router)#
```

Example (VRF-lite)

To enter Router Configuration mode to configure an existing OSPF routing process `100` for VRF instance `red`, use the commands:

```
awplus# configure terminal
awplus(config)# router ospf 100 red
awplus(config-router)#
```

Command changes

Version 5.4.6-2.1: VRF-lite support added.

router-id

Overview Use this command to specify a router ID for the OSPF process.

Use the **no** variant of this command to force OSPF to use the previous OSPF router-id behavior.

Syntax

```
router-id <ip-address>
no router-id
```

Parameter	Description
<ip-address>	Specifies the router ID in IPv4 address format.

Mode Router Configuration

Usage Configure each router with a unique router-id. In an OSPF router process that has active neighbors, a new router-id is used at the next reload or when you restart OSPF manually.

Example The following example shows a fixed router ID 10.10.10.60

```
awplus# configure terminal
awplus(config)# router ospf 100
awplus(config-router)# router-id 10.10.10.60
```

Related Commands show ip ospf

show debugging ospf

Overview Use this command to display which OSPF debugging options are currently enabled.

For information on filtering and saving command output, see the "Getting Started with AlliedWare Plus" Feature Overview and Configuration Guide.

Syntax

```
show debugging ospf
```

Mode User Exec and Privileged Exec

Example

```
awplus# show debugging ospf
```

Output Figure 27-2: Example output from the **show debugging ospf** command

```
OSPF debugging status:
  OSPF packet Link State Update debugging is on
  OSPF all events debugging is on
```

show ip ospf

Overview Use this command to display general information about all OSPF routing processes. Include the process ID parameter with this command to display information about specified instances.

For information on filtering and saving command output, see the "Getting Started with AlliedWare Plus" Feature Overview and Configuration Guide.

Syntax

```
show ip ospf
show ip ospf <process-id>
```

Parameter	Description
<process-id>	*<0-65535>* The ID of the router process for which information will be displayed. If this parameter is included, only the information for the specified routing process is displayed.

Mode User Exec and Privileged Exec

Examples To display general information about all OSPF routing processes, use the command:

```
awplus# show ip ospf
```

To display general information about OSPF routing process `100`, use the command:

```
awplus# show ip ospf 100
```

Table 1: Example output from the **show ip ospf** command

```
Route Licence: Route : Limit=0, Allocated=0, Visible=0, Internal=0
Route Licence: Breach: Current=0, Watermark=0
Routing Process "ospf 10" with ID 192.168.1.1
Process uptime is 10 hours 24 minutes
Process bound to VRF default
Conforms to RFC2328, and RFC1583 Compatibility flag is disabled
Supports only single TOS(TOS0) routes
Supports opaque LSA
Supports Graceful Restart
SPF schedule delay min 0.500 secs, SPF schedule delay max 50.0 secs
Refresh timer 10 secs
Number of incomming current DD exchange neighbors 0/5
Number of outgoing current DD exchange neighbors 0/5
Number of external LSA 0. Checksum 0x000000
Number of opaque AS LSA 0. Checksum 0x000000
Number of non-default external LSA 0
```

Table 1: Example output from the **show ip ospf** command (cont.)

```
External LSA database is unlimited.
Number of LSA originated 0
Number of LSA received 0
Number of areas attached to this router: 2
   Area 0 (BACKBONE) (Inactive)
       Number of interfaces in this area is 0(0)
       Number of fully adjacent neighbors in this area is 0
       Area has no authentication
       SPF algorithm executed 0 times
       Number of LSA 0. Checksum 0x000000

   Area 1 (Inactive)
       Number of interfaces in this area is 0(0)
       Number of fully adjacent neighbors in this area is 0
       Number of fully adjacent virtual neighbors through this area is 0
       Area has no authentication
       SPF algorithm executed 0 times
       Number of LSA 0. Checksum 0x000000
```

Table 2: Example output from the **show ip ospf <process-id>** command

```
Routing Process "ospf 100" with ID 10.10.11.146
Process uptime is 0 minute
Conforms to RFC2328, and RFC1583Compatibility flag is disabled
Supports only single TOS(TOS0) routes
Supports opaque LSA
SPF schedule delay 5 secs, Hold time between two SPFs 10 secs
Refresh timer 10 secs
Number of external LSA 0. Checksum Sum 0x0
Number of non-default external LSA 0
External LSA database is unlimited.
Number of areas attached to this router: 1
   Area 1
       Number of interfaces in this area is 1(1)
       Number of fully adjacent neighbors in this area is 0
       Number of fully adjacent virtual neighbors through this area is 0
       Area has no authentication
       SPF algorithm executed 0 times
       Number of LSA 1. Checksum Sum 0x00e3e2
```

Table 3: Parameters in the output of the **show ip ospf** command

Output Parameter		Meaning
`Route Licence: Route:`	`Limit`	The maximum number of OSPF routes which may be used for forwarding.
	`Allocated`	The current total number of OSPF routes allocated in the OSPF module.
	`Visible`	The current number of OSPF routes which may be used for forwarding.
	`Internal`	The number of OSPF internal routes used for calculating paths to ASBRs.
`Number of external LSA`		The number of external link-state advertisements
`Number of opaque AS LSA`		Number of opaque link-state advertisements

Related Commands router ospf

show ip ospf border-routers

Overview Use this command to display the ABRs and ASBRs for all OSPF instances. Include the process ID parameter with this command to view data about specified instances.

For information on filtering and saving command output, see the "Getting Started with AlliedWare Plus" Feature Overview and Configuration Guide.

Syntax

```
show ip ospf border-routers
show ip ospf <process-id> border-routers
```

Parameter	Description
<process-id>	*<0-65535>* The ID of the router process for which information will be displayed.

Mode User Exec and Privileged Exec

Output Figure 27-3: Example output from the **show ip ospf border-routers** command

```
OSPF process 1 internal Routing Table
Codes: i - Intra-area route, I - Inter-area route
i 10.15.0.1 [10] via 10.10.0.1, vlan2, ASBR, Area 0.0.0.0
i 172.16.10.1 [10] via 10.10.11.50, vlan3, ABR, ASBR, Area
0.0.0.0
```

show ip ospf database

Overview Use this command to display a database summary for OSPF information. Include the process ID parameter with this command to display information about specified instances.

For information on filtering and saving command output, see the "Getting Started with AlliedWare Plus" Feature Overview and Configuration Guide.

Syntax

```
show ip ospf [<process-id>] database
[self-originate|max-age|adv router <adv-router-id>]
```

Parameter	Description
<process-id>	*<0-65535>* The ID of the router process for which information will be displayed.
self-originate	Displays self-originated link states.
max-age	Displays LSAs in MaxAge list. It maintains the list of the all LSAs in the database which have reached the max-age which is 3600 seconds.
adv-router	Advertising Router LSA.
<adv-router-id>	The Advertising Router ID (usually entered in IPv4 address format A.B.C.D). Note that this ID component no longer represents an address; it is simply a character string that has an IPv4 address format.

Mode User Exec and Privileged Exec

Examples To display the ABRs and ASBRs for all OSPF instances, use the command:

```
awplus# show ip ospf border-routers
```

To display the ABRs and ASBRs for the specific OSPF instance 721, use the command:

```
awplus# show ip ospf 721 border-routers
```

Output Figure 27-4: Example output from the **show ip ospf database** command

```
       OSPF Router process 1 with ID (10.10.11.60)
                Router Link States (Area 0.0.0.1)
Link ID         ADV Router      Age  Seq#       CkSum  Link
count
10.10.11.60     10.10.11.60       32 0x80000002 0x472b 1
       OSPF Router process 100 with ID (10.10.11.60)
                Router Link States (Area 0.0.0.0)
Link ID         ADV Router      Age  Seq#       CkSum  Link
count
10.10.11.60     10.10.11.60      219 0x80000001 0x4f5d 0
```

Example

```
awplus# show ip ospf database external 1.2.3.4 self-originate
awplus# show ip ospf database self-originate
```

Figure 27-5: Example output from the **show ip ospf database self-originate** command

```
       OSPF Router process 100 with ID (10.10.11.50)
                Router Link States (Area 0.0.0.1 [NSSA])
Link ID         ADV Router      Age  Seq#       CkSum  Link
count
10.10.11.50     10.10.11.50     20  0x80000007  0x65c3 2
                Area-Local Opaque-LSA (Area 0.0.0.1 [NSSA])
Link ID         ADV Router      Age  Seq#       CkSum Opaque ID
67.1.4.217      10.10.11.50     37 0x80000001  0x2129 66777
                AS-Global Opaque-LSA
Link ID         ADV Router      Age  Seq#       CkSum Opaque ID
67.1.4.217      10.10.11.50     37 0x80000001  0x2daa 66777
```

show ip ospf database asbr-summary

Overview Use this command to display information about the Autonomous System Boundary Router (ASBR) summary LSAs.

For information on filtering and saving command output, see the "Getting Started with AlliedWare Plus" Feature Overview and Configuration Guide.

Syntax

```
show ip ospf database asbr-summary [<ip-addr>]
[self-originate|<advrouter>]
```

Parameter	Description
<advrouter>	adv-router <ip-address>
adv-router	Displays all the LSAs of the specified router.
<ip-addr>	A link state ID, as an IP address.
self-originate	Displays self-originated link states.

Mode User Exec and Privileged Exec

Examples

```
awplus# show ip ospf database asbr-summary 1.2.3.4
self-originate
```

```
awplus# show ip ospf database asbr-summary self-originate
```

```
awplus# show ip ospf database asbr-summary 1.2.3.4 adv-router
2.3.4.5
```

show ip ospf database external

Overview Use this command to display information about the external LSAs.

For information on filtering and saving command output, see the "Getting Started with AlliedWare Plus" Feature Overview and Configuration Guide.

Syntax

```
show ip ospf database external adv-router[<adv-router-id>]
[self-originate|adv-router<adv-router-id>]
```

Parameter	Description
`adv-router`	Displays all the LSAs of the specified router.
`self-originate`	Displays self-originated link states.
`<adv-router- id>`	The Advertising Router ID (usually entered in IPv4 address format A.B.C.D). Note that this ID component no longer represents an address; it is simply a character string that has an IPv4 address format.

Mode User Exec and Privileged Exec

Examples

```
awplus# show ip ospf database external 1.2.3.4 self-originate
awplus# show ip ospf database external self-originate
awplus# show ip ospf database external 1.2.3.4 adv-router
2.3.4.5
```

Output Figure 27-6: Example output from the **show ip ospf database external self-originate** command

```
      OSPF Router process 100 with ID (10.10.11.50)
                AS External Link States
  LS age: 298
  Options: 0x2 (*|-|-|-|-|-|E|-)
  LS Type: AS-external-LSA
  Link State ID: 10.10.100.0 (External Network Number)
  Advertising Router: 10.10.11.50
  LS Seq Number: 80000001
  Checksum: 0x7033
  Length: 36
  Network Mask: /24
        Metric Type: 2 (Larger than any link state path)
        TOS: 0
        Metric: 20
        Forward Address: 10.10.11.50
        External Route Tag: 0
```

Output Figure 27-7: Example output from the **show ip ospf database external adv-router** command

```
awplus#show ip ospf database external adv-router 1.1.1.1

                 AS External Link States
LS age: 273
Options: 0x2 (-|-|-|-|-|-|E|-)
LS Type: AS-external-LSA
Link State ID: 172.16.0.0 (External Network Number)
Advertising Router: 1.1.1.1
LS Seq Number: 80000004
Checksum: 0x02f8
Length: 36
Network Mask: /24
      Metric Type: 2 (Larger than any link state path)
      TOS: 0
      Metric: 20
      Forward Address: 0.0.0.0
      External Route Tag: 0
```

show ip ospf database network

Overview Use this command to display information about the network LSAs.

For information on filtering and saving command output, see the "Getting Started with AlliedWare Plus" Feature Overview and Configuration Guide.

Syntax

```
show ip ospf database network [<adv-router-id>]
[self-originate|<adv-router-id>]
```

Parameter	Description
<adv-router-id>	The router ID of the advertising router, in IPv4 address format. Note however, that this no longer represents a real address.
`self-originate`	Displays self-originated link states.
`adv-router`	Displays all the LSAs of the specified router.

Mode User Exec and Privileged Exec

Examples

```
awplus# show ip ospf database network 1.2.3.4 self-originate
awplus# show ip ospf database network self-originate
awplus# show ip ospf database network 1.2.3.4 adv-router 2.3.4.5
```

Output Figure 27-8: Example output from the **show ip ospf database network** command

```
      OSPF Router process 200 with ID (192.30.30.2)
                Net Link States (Area 0.0.0.0)
  LS age: 1387
  Options: 0x2 (*|-|-|-|-|-|E|-)
  LS Type: network-LSA
  Link State ID: 192.10.10.9 (address of Designated Router)
  Advertising Router: 192.30.30.3
  LS Seq Number: 80000001
  Checksum: 0xe1b0
  Length: 32
  Network Mask: /24
        Attached Router: 192.20.20.1
        Attached Router: 192.30.30.3
      OSPF Router process 200 with ID (192.30.30.2)
                Net Link States (Area 0.0.0.0)
...
```

show ip ospf database nssa-external

Overview Use this command to display information about the NSSA external LSAs.

For information on filtering and saving command output, see the "Getting Started with AlliedWare Plus" Feature Overview and Configuration Guide.

Syntax

```
show ip ospf database nssa-external [<ip-address>]
[self-originate|<advrouter>]
```

Parameter	Description
<advrouter>	adv-router <ip-address>
adv-router	Displays all the LSAs of the specified router.
<ip-address>	A link state ID, as an IP address.
self-originate	Displays self-originated link states.

Mode User Exec and Privileged Exec

Examples

```
awplus# show ip ospf database nssa-external 1.2.3.4
self-originate
```

```
awplus# show ip ospf database nssa-external self-originate
```

```
awplus# show ip ospf database nssa-external 1.2.3.4 adv-router
2.3.4.5
```

Output Figure 27-9: Example output from the **show ip ospf database nssa-external adv-router** command

```
      OSPF Router process 100 with ID (10.10.11.50)
               NSSA-external Link States (Area 0.0.0.0)
               NSSA-external Link States (Area 0.0.0.1 [NSSA])
LS age: 78
Options: 0x0 (*|-|-|-|-|-|-|-)
LS Type: AS-NSSA-LSA
Link State ID: 0.0.0.0 (External Network Number For NSSA)
Advertising Router: 10.10.11.50
LS Seq Number: 80000001
Checksum: 0xc9b6
Length: 36
Network Mask: /0
      Metric Type: 2 (Larger than any link state path)
      TOS: 0
      Metric: 1
      NSSA: Forward Address: 0.0.0.0
```

```
       OSPF Router process 100 with ID (10.10.11.50)
               NSSA-external Link States (Area 0.0.0.0)
               NSSA-external Link States (Area 0.0.0.1 [NSSA])
LS age: 78
Options: 0x0 (*|-|-|-|-|-|-)
LS Type: AS-NSSA-LSA
Link State ID: 0.0.0.0 (External Network Number For NSSA)
Advertising Router: 10.10.11.50
LS Seq Number: 80000001
Checksum: 0xc9b6
Length: 36
Network Mask: /0
      Metric Type: 2 (Larger than any link state path)
      TOS: 0
      Metric: 1
      NSSA: Forward Address: 0.0.0.0
      External Route Tag: 0
               NSSA-external Link States (Area 0.0.0.1 [NSSA])
```

show ip ospf database opaque-area

Overview Use this command to display information about the area-local (link state type 10) scope LSAs. Type-10 Opaque LSAs are not flooded beyond the borders of their associated area.

For information on filtering and saving command output, see the "Getting Started with AlliedWare Plus" Feature Overview and Configuration Guide.

Syntax

```
show ip ospf database opaque-area [<ip-address>]
[self-originate|<advrouter>]
```

Parameter	Description
<advrouter>	adv-router <ip-address>
adv-router	Displays all the LSAs of the specified router.
<ip-address>	A link state ID, as an IP address.
self-originate	Displays self-originated link states.

Mode User Exec and Privileged Exec

Examples

```
awplus# show ip ospf database opaque-area 1.2.3.4
self-originate
awplus# show ip ospf database opaque-area self-originate
awplus# show ip ospf database opaque-area 1.2.3.4 adv-router
2.3.4.5
```

Output Figure 27-10: Example output from the **show ip ospf database opaque-area** command

```
       OSPF Router process 100 with ID (10.10.11.50)
                Area-Local Opaque-LSA (Area 0.0.0.0)
  LS age: 262
  Options: 0x2 (*|-|-|-|-|-|E|-)
  LS Type: Area-Local Opaque-LSA
  Link State ID: 10.0.25.176 (Area-Local Opaque-Type/ID)
  Opaque Type: 10
  Opaque ID: 6576
  Advertising Router: 10.10.11.50
  LS Seq Number: 80000001
  Checksum: 0xb413
  Length: 26
```

show ip ospf database opaque-as

Overview Use this command to display information about the link-state type 11 LSAs. This type of link-state denotes that the LSA is flooded throughout the Autonomous System (AS).

For information on filtering and saving command output, see the "Getting Started with AlliedWare Plus" Feature Overview and Configuration Guide.

Syntax

```
show ip ospf database opaque-as [<ip-address>]
[self-originate|<advrouter>]
```

Parameter	Description
<advrouter>	adv-router <ip-address>
adv-router	Displays all the LSAs of the specified router.
<ip-address>	A link state ID, as an IP address.
self-originate	Displays self-originated link states.

Mode User Exec and Privileged Exec

Examples

```
awplus# show ip ospf database opaque-as 1.2.3.4 self-originate
awplus# show ip ospf database opaque-as self-originate
awplus# show ip ospf database opaque-as 1.2.3.4 adv-router
2.3.4.5
```

Output Figure 27-11: Example output from the **show ip ospf database opaque-as** command

```
       OSPF Router process 100 with ID (10.10.11.50)
                AS-Global Opaque-LSA
  LS age: 325
  Options: 0x2 (*|-|-|-|-|-|E|-)
  LS Type: AS-external Opaque-LSA
  Link State ID: 11.10.9.23 (AS-external Opaque-Type/ID)
  Opaque Type: 11
  Opaque ID: 657687
  Advertising Router: 10.10.11.50
  LS Seq Number: 80000001
  Checksum: 0xb018
  Length: 25
```

show ip ospf database opaque-link

Overview Use this command to display information about the link-state type 9 LSAs. This type denotes a link-local scope. The LSAs are not flooded beyond the local network.

For information on filtering and saving command output, see the "Getting Started with AlliedWare Plus" Feature Overview and Configuration Guide.

Syntax

```
show ip ospf database opaque-link [<ip-address>]
[self-originate|<advrouter>]
```

Parameter	Description
<advrouter>	adv-router <ip-address>
adv-router	Displays all the LSAs of the specified router.
<ip-address>	A link state ID, as an IP address.
self-originate	Displays self-originated link states.

Mode User Exec and Privileged Exec

Examples

```
awplus# show ip ospf database opaque-link 1.2.3.4
self-originate
```

```
awplus# show ip ospf database opaque-link self-originate
```

```
awplus# show ip ospf database opaque-link 1.2.3.4 adv-router
2.3.4.5
```

Output Figure 27-12: Example output from the **show ip ospf database opaque-link** command

```
       OSPF Router process 100 with ID (10.10.11.50)
                Link-Local Opaque-LSA (Link hme0:10.10.10.50)
  LS age: 276
  Options: 0x2 (*|-|-|-|-|-|E|-)
  LS Type: Link-Local Opaque-LSA
  Link State ID: 10.0.220.247 (Link-Local Opaque-Type/ID)
  Opaque Type: 10
  Opaque ID: 56567
  Advertising Router: 10.10.11.50
  LS Seq Number: 80000001
  Checksum: 0x744e
  Length: 26
                Link-Local Opaque-LSA (Link hme1:10.10.11.50)
```

show ip ospf database router

Overview Use this command to display information only about the router LSAs.

For information on filtering and saving command output, see the "Getting Started with AlliedWare Plus" Feature Overview and Configuration Guide.

Syntax

```
show ip ospf database router [<adv-router-id>
self-originate|<adv-router-id>]
```

Parameter	Description
`adv-router`	Displays all the LSAs of the specified router.
`self-originate`	Displays self-originated link states.
`<adv-router- id>`	The router ID of the advertising router, in IPv4 address format. Note however, that this no longer represents a real address.

Mode User Exec and Privileged Exec

Examples

```
awplus# show ip ospf database router 1.2.3.4 self-originate
awplus# show ip ospf database router self-originate
awplus# show ip ospf database router 1.2.3.4 adv-router 2.3.4.5
```

Output Figure 27-13: Example output from the **show ip ospf database router** command

```
       OSPF Router process 100 with ID (10.10.11.50)
                Router Link States (Area 0.0.0.0)
  LS age: 878
  Options: 0x2 (*|-|-|-|-|-|E|-)
  Flags: 0x3 : ABR ASBR
  LS Type: router-LSA
  Link State ID: 10.10.11.50
  Advertising Router: 10.10.11.50
  LS Seq Number: 80000004
  Checksum: 0xe39e
  Length: 36
   Number of Links: 1
    Link connected to: Stub Network
     (Link ID) Network/subnet number: 10.10.10.0
     (Link Data) Network Mask: 255.255.255.0
      Number of TOS metrics: 0
        TOS 0 Metric: 10
```

```
               Router Link States (Area 0.0.0.1)
  LS age: 877
  Options: 0x2 (*|-|-|-|-|-|E|-)
  Flags: 0x3 : ABR ASBR
  LS Type: router-LSA
  Link State ID: 10.10.11.50
  Advertising Router: 10.10.11.50
  LS Seq Number: 80000003
  Checksum: 0xee93
  Length: 36
   Number of Links: 1
    Link connected to: Stub Network
     (Link ID) Network/subnet number: 10.10.11.0
     (Link Data) Network Mask: 255.255.255.0
      Number of TOS metrics: 0
       TOS 0 Metric: 10
```

show ip ospf database summary

Overview Use this command to display information about the summary LSAs.

For information on filtering and saving command output, see the "Getting Started with AlliedWare Plus" Feature Overview and Configuration Guide.

Syntax

```
show ip ospf database summary [<ip-address>]
[self-originate|<advrouter>]
```

Parameter	Description
<advrouter>	adv-router <ip-address>
adv-router	Displays all the LSAs of the specified router.
<ip-address>	A link state ID, as an IP address.
self-originate	Displays self-originated link states.

Mode User Exec and Privileged Exec

Examples

```
awplus# show ip ospf database summary 1.2.3.4 self-originate
awplus# show ip ospf database summary self-originate
awplus# show ip ospf database summary 1.2.3.4 adv-router 2.3.4.5
```

Output Figure 27-14: Example output from the **show ip ospf database summary** command

```
       OSPF Router process 100 with ID (10.10.11.50)
                Summary Link States (Area 0.0.0.0)
                Summary Link States (Area 0.0.0.1)
  LS age: 1124
  Options: 0x2 (*|-|-|-|-|-|E|-)
  LS Type: summary-LSA
  Link State ID: 10.10.10.0 (summary Network Number)
  Advertising Router: 10.10.11.50
  LS Seq Number: 80000001
  Checksum: 0x41a2
  Length: 28
  Network Mask: /24
        TOS: 0  Metric: 10
```

Figure 27-15: Example output from the **show ip ospf database summary self-originate** command

```
       OSPF Router process 100 with ID (10.10.11.50)
                Summary Link States (Area 0.0.0.0)
  LS age: 1061
  Options: 0x2 (*|-|-|-|-|-|E|-)
  LS Type: summary-LSA
  Link State ID: 10.10.11.0 (summary Network Number)
  Advertising Router: 10.10.11.50
  LS Seq Number: 80000001
  Checksum: 0x36ac
  Length: 28
  Network Mask: /24
        TOS: 0  Metric: 10
                Summary Link States (Area 0.0.0.1)
  LS age: 1061
  Options: 0x2 (*|-|-|-|-|-|E|-)
LS Type: summary-LSA
  Link State ID: 10.10.11.0 (summary Network Number)
  Advertising Router: 10.10.11.50
  LS Seq Number: 80000001
  Checksum: 0x36ac
  Length: 28
  Network Mask: /24
        TOS: 0  Metric: 10
                Summary Link States (Area 0.0.0.1)
  LS age: 1061
  Options: 0x2 (*|-|-|-|-|-|E|-)
  LS Type: summary-LSA
  Link State ID: 10.10.10.0 (summary Network Number)
  Advertising Router: 10.10.11.50
  LS Seq Number: 80000001
  Checksum: 0x41a2
  Length: 28
  Network Mask: /24
        TOS: 0  Metric: 10
```

Figure 27-16: Example output from the **show ip ospf database summary adv-router <***ip-address***>** command

```
       OSPF Router process 100 with ID (10.10.11.50)
                Summary Link States (Area 0.0.0.0)
  LS age: 989
  Options: 0x2 (*|-|-|-|-|-|E|-)
  LS Type: summary-LSA
  Link State ID: 10.10.11.0 (summary Network Number)
  Advertising Router: 10.10.11.50
  LS Seq Number: 80000001
  Checksum: 0x36ac
  Length: 28
  Network Mask: /24
        TOS: 0  Metric: 10
               Summary Link States (Area 0.0.0.1)
  LS age: 989
  Options: 0x2 (*|-|-|-|-|-|E|-)
LS Type: summary-LSA
  Link State ID: 10.10.11.0 (summary Network Number)
  Advertising Router: 10.10.11.50
  LS Seq Number: 80000001
  Checksum: 0x36ac
  Length: 28
  Network Mask: /24
        TOS: 0  Metric: 10
```

show ip ospf interface

Overview Use this command to display interface information for OSPF.

For information on filtering and saving command output, see the "Getting Started with AlliedWare Plus" Feature Overview and Configuration Guide.

Syntax

```
show ip ospf interface [<interface-name>]
```

Parameter	Description
<interface-name>	The VLAN name, for example vlan3.

Mode User Exec and Privileged Exec

Examples

```
awplus# show ip ospf interface vlan2
```

Output Figure 27-17: Example output from the **show ip ospf interface** command

```
vlan2 is up, line protocol is up
  Internet Address 1.1.1.1/24, Area 0.0.0.0, MTU 1500
  Process ID 0, Router ID 33.33.33.33, Network Type BROADCAST, Cost: 10
  Transmit Delay is 1 sec, State Waiting, Priority 1, TE Metric 0
  No designated router on this network
  No backup designated router on this network
  Timer intervals configured, Hello 10, Dead 40, Wait 40, Retransmit 5
    Hello due in 00:00:02
  Neighbor Count is 0, Adjacent neighbor count is 0
  Crypt Sequence Number is 1106347721
  Hello received 0 sent 1, DD received 0 sent 0
  LS-Req received 0 sent 0, LS-Upd received 0 sent 0
  LS-Ack received 0 sent 0, Discarded 0
```

show ip ospf neighbor

Overview Use this command to display information on OSPF neighbors. Include the **ospf-id** parameter with this command to display information about specified instances.

For information on filtering and saving command output, see the "Getting Started with AlliedWare Plus" Feature Overview and Configuration Guide.

Syntax

```
show ip ospf [<ospf-id>] neighbor <neighbor-ip-addr> [detail]
show ip ospf [<ospf-id>] neighbor detail [all]
show ip ospf [<ospf-id>] neighbor [all]
show ip ospf [<ospf-id>] neighbor interface <ip-addr>
```

Parameter	Description
<ospf-id>	<0-65535> The ID of the router process for which information will be displayed.
<neighbor-ip-addr>	The Neighbor ID, entered as an IP address.
`all`	Include downstatus neighbor.
`detail`	Detail of all neighbors.
<ip-addr>	IP address of the interface.

Mode User Exec and Privileged Exec

Examples

```
awplus# show ip ospf neighbor detail
awplus# show ip ospf neighbor 1.2.3.4
awplus# show ip ospf neighbor interface 10.10.10.50 detail all
```

Output Note that before a device enters OSPF Graceful Restart it first informs its OSPF neighbors. In the **show** output, the * symbol beside the **Dead Time** parameter indicates that the device has been notified of a neighbor entering the graceful restart state, as shown in the figures below.

Figure 27-18: Example output from the **show ip ospf neighbor** command

```
OSPF process 1:
Neighbor ID     Pri   State           Dead Time   Address         Interface
10.10.10.50       1   Full/DR         00:00:38    10.10.10.50     vlan1
OSPF process 100:
Neighbor ID     Pri   State           Dead Time   Address         Interface
10.10.11.50       1   Full/Backup     00:00:31    10.10.11.50     vlan2
awplus#show ip ospf 1 neighbor
OSPF process 1:
Neighbor ID     Pri   State           Dead Time   Address         Interface
10.10.10.50       1   Full/DR         00:00:38*   10.10.10.50     vlan1
```

Figure 27-19: Example output from the **show ip ospf <ospf-id> neighbor** command

```
OSPF process 100:
Neighbor ID     Pri   State           Dead Time   Address         Interface
192.168.0.3      50   2-Way/DROther   00:01:59*   192.168.200.3   vlan200
```

Figure 27-20: Example output from the **show ip ospf neighbor detail** command

```
 Neighbor 10.10.10.50, interface address 10.10.10.50
    In the area 0.0.0.0 via interface vlan5
    Neighbor priority is 1, State is Full, 5 state changes
    DR is 10.10.10.50, BDR is 10.10.10.10
    Options is 0x42 (*|O|-|-|-|-|E|-)
    Dead timer due in 00:00:38
    Neighbor is up for 00:53:07
    Database Summary List 0
    Link State Request List 0
    Link State Retransmission List 0
    Crypt Sequence Number is 0
    Thread Inactivity Timer on
    Thread Database Description Retransmission off
    Thread Link State Request Retransmission off
    Thread Link State Update Retransmission on
 Neighbor 10.10.11.50, interface address 10.10.11.50
    In the area 0.0.0.0 via interface vlan2
    Neighbor priority is 1, State is Full, 5 state changes
    DR is 10.10.11.10, BDR is 10.10.11.50
    Options is 0x42 (*|O|-|-|-|-|E|-)
    Dead timer due in 00:00:31
    Neighbor is up for 00:26:50
    Database Summary List 0
    Link State Request List 0
    Link State Retransmission List 0
    Crypt Sequence Number is 0
    Thread Inactivity Timer on
    Thread Database Description Retransmission off
    Thread Link State Request Retransmission off
    Thread Link State Update Retransmission on
```

show ip ospf route

Overview Use this command to display the OSPF routing table. Include the **ospf-id** parameter with this command to display the OSPF routing table for specified instances.

For information on filtering and saving command output, see the "Getting Started with AlliedWare Plus" Feature Overview and Configuration Guide.

Syntax

```
show ip ospf [<ospf-id>] route
```

Parameter	Description
<ospf-id>	<0-65535> The ID of the router process for which information will be displayed. If this parameter is included, only the information for this specified routing process is displayed.

Mode User Exec and Privileged Exec

Examples To display the OSPF routing table, use the command:

```
awplus# show ip ospf route
```

Output Figure 27-21: Example output from the **show ip ospf route** command for a specific process

```
OSPF process 1:
Codes: C - connected, D - Discard, O - OSPF, IA - OSPF inter area
       N1 - OSPF NSSA external type 1, N2 - OSPF NSSA external type 2
       E1 - OSPF external type 1, E2 - OSPF external type 2
O  10.10.0.0/24 [10] is directly connected, vlan1, Area 0.0.0.0
O  10.10.11.0/24 [10] is directly connected, vlan2, Area 0.0.0.0
O  10.10.11.100/32 [10] is directly connected, lo, Area 0.0.0.0
E2 10.15.0.0/24 [10/50] via 10.10.0.1, vlan1
IA 172.16.10.0/24 [30] via 10.10.11.50, vlan2, Area 0.0.0.0
E2 192.168.0.0/16 [10/20] via 10.10.11.50, vlan2
```

show ip ospf virtual-links

Overview Use this command to display virtual link information.

For information on filtering and saving command output, see the "Getting Started with AlliedWare Plus" Feature Overview and Configuration Guide.

Syntax

```
show ip ospf virtual-links
```

Mode User Exec and Privileged Exec

Examples To display virtual link information, use the command:

```
awplus# show ip ospf virtual-links
```

Output Figure 27-22: Example output from the **show ip ospf virtual-links** command

```
Virtual Link VLINK0 to router 10.10.0.9 is up
  Transit area 0.0.0.1 via interface vlan5
  Transmit Delay is 1 sec, State Point-To-Point,
  Timer intervals configured, Hello 10, Dead 40, Wait 40,
Retransmit 5
    Hello due in 00:00:02
    Adjacency state Full
Virtual Link VLINK1 to router 10.10.0.123 is down
  Transit area 0.0.0.1 via interface *
  Transmit Delay is 1 sec, State Down,
  Timer intervals configured, Hello 10, Dead 40, Wait 40,
Retransmit 5
    Hello due in inactive
    Adjacency state Down
```

show ip protocols ospf

Overview Use this command to display OSPF process parameters and statistics.

For information on filtering and saving command output, see the "Getting Started with AlliedWare Plus" Feature Overview and Configuration Guide.

Syntax

```
show ip protocols ospf
```

Mode User Exec and Privileged Exec

Examples To display OSPF process parameters and statistics, use the command:

```
awplus# show ip protocols ospf
```

Output Figure 27-23: Example output from the **show ip protocols ospf** command

```
Routing Protocol is "ospf 200"
  Invalid after 0 seconds, hold down 0, flushed after 0
  Outgoing update filter list for all interfaces is
    Redistributed kernel filtered by filter1
  Incoming update filter list for all interfaces is
  Redistributing: kernel
  Routing for Networks:
    192.30.30.0/24
    192.40.40.0/24
  Routing Information Sources:
    Gateway         Distance      Last Update
  Distance: (default is 110)
    Address         Mask            Distance List
```

summary-address

Overview Use this command to summarize, or possibly suppress, external routes that have the specified address range.

Use the **no** variant of this command to stop summarizing, or suppressing, external routes that have the specified address range.

Syntax

```
summary-address <ip-addr/prefix-length> [not-advertise] [tag <0-4294967295>]
```

```
no summary-address <ip-addr/prefix-length> [not-advertise] [tag <0-4294967295>]
```

Parameter	Description
<ip-addr/prefix-length>	Specifies the base IP address of the summary address.The range of addresses given as IPv4 starting address and a prefix length.
`not-advertise`	Set the **not-advertise** option if you do not want OSPF to advertise either the summary address or the individual networks within the range of the summary address.
`tag <0-4294967295>`	The tag parameter specifies the tag value that OSPF places in the AS external LSAs created as a result of redistributing the summary route. The tag overrides tags set by the original route.

Default The default tag value for a summary address is 0.

Mode Router Configuration

Usage An address range is a pairing of an address and a mask that is almost the same as IP network number. For example, if the specified address range is 192.168.0.0/255.255.240.0, it matches: 192.168.1.0/24, 192.168.4.0/22, 192.168.8.128/25 and so on.

Redistributing routes from other protocols into OSPF requires the router to advertise each route individually in an external LSA. Use the **summary address** command to advertise one summary route for all redistributed routes covered by a specified network address and mask. This helps decrease the size of the OSPF link state database.

Ensure OSPF routes exist in the summary address range for advertisement before using this command.

Example The following example uses the **summary-address** command to aggregate external LSAs that match the network 172.16.0.0/16 and assign a Tag value of 3.

```
awplus# configure terminal
awplus(config)# router ospf 100
awplus(config-router)# summary-address 172.16.0.0/16 tag 3
```

timers spf exp

Overview Use this command to adjust route calculation timers using exponential back-off delays.

Use **no** form of this command to return to the default exponential back-off timer values.

Syntax

```
timers spf exp <min-holdtime> <max-holdtime>
no timers spf exp
```

Parameter	Description
<min-holdtime>	*<0-2147483647>* Specifies the minimum delay between receiving a change to the SPF calculation in milliseconds. The default SPF min-holdtime value is 50 milliseconds.
<max-holdtime>	*<0-2147483647>* Specifies the maximum delay between receiving a change to the SPF calculation in milliseconds. The default SPF max-holdtime value is 50 seconds.

Mode Router Configuration

Default The default SPF min-holdtime is 50 milliseconds. The default SPF max-holdtime is 40 seconds.

Usage This command configures the minimum and maximum delay time between the receipt of a topology change and the calculation of the Shortest Path First (SPF).

Examples To set the minimum delay time to 5 milliseconds and maximum delay time to 10 milliseconds, use the commands:

```
awplus# configure terminal
awplus(config)# router ospf 100
awplus(config-router)# timers spf exp 5 10
```

To reset the minimum and maximum delay times to the default values, use the commands:

```
awplus# configure terminal
awplus(config)# router ospf 100
awplus(config-router)# no timers spf exp
```

Related Commands timers spf exp

undebug ospf events

Overview This command applies the functionality of the no debug ospf events command.

undebug ospf ifsm

Overview This command applies the functionality of the no debug ospf ifsm command.

undebug ospf lsa

Overview This command applies the functionality of the no debug ospf lsa command.

undebug ospf nfsm

Overview This command applies the functionality of the no debug ospf nfsm command.

undebug ospf nsm

Overview This command applies the functionality of the no debug ospf nsm command.

undebug ospf packet

Overview This command applies the functionality of the no debug ospf packet command.

undebug ospf route

Overview This command applies the functionality of the no debug ospf route command.

28 OSPFv3 for IPv6 Commands

Introduction

Overview This chapter provides an alphabetical reference of commands used to configure OSPFv3 for IPv6. See How to Configure Basic OSPFv3_Scenarios for more information and examples.

Command List

- "abr-type" on page 1008
- "area authentication ipsec spi" on page 1009
- "area default-cost (IPv6 OSPF)" on page 1011
- "area encryption ipsec spi esp" on page 1012
- "area range (IPv6 OSPF)" on page 1015
- "area stub (IPv6 OSPF)" on page 1017
- "area virtual-link (IPv6 OSPF)" on page 1018
- "area virtual-link authentication ipsec spi" on page 1020
- "area virtual-link encryption ipsec spi" on page 1022
- "auto-cost reference bandwidth (IPv6 OSPF)" on page 1025
- "bandwidth" on page 1027
- "clear ipv6 ospf process" on page 1028
- "debug ipv6 ospf events" on page 1029
- "debug ipv6 ospf ifsm" on page 1030
- "debug ipv6 ospf lsa" on page 1031
- "debug ipv6 ospf nfsm" on page 1032
- "debug ipv6 ospf packet" on page 1033
- "debug ipv6 ospf route" on page 1034
- "default-information originate" on page 1035

- "default-metric (IPv6 OSPF)" on page 1036
- "distance (IPv6 OSPF)" on page 1037
- "ipv6 ospf authentication spi" on page 1039
- "ipv6 ospf cost" on page 1041
- "ipv6 ospf dead-interval" on page 1043
- "ipv6 ospf display route single-line" on page 1044
- "ipv6 ospf encryption spi esp" on page 1045
- "ipv6 ospf hello-interval" on page 1048
- "ipv6 ospf neighbor" on page 1049
- "ipv6 ospf network" on page 1051
- "ipv6 ospf priority" on page 1052
- "ipv6 ospf retransmit-interval" on page 1053
- "ipv6 ospf transmit-delay" on page 1054
- "ipv6 router ospf area" on page 1055
- "max-concurrent-dd (IPv6 OSPF)" on page 1057
- "passive-interface (IPv6 OSPF)" on page 1058
- "redistribute (IPv6 OSPF)" on page 1059
- "restart ipv6 ospf graceful" on page 1061
- "router ipv6 ospf" on page 1062
- "router-id (IPv6 OSPF)" on page 1063
- "show debugging ipv6 ospf" on page 1064
- "show ipv6 ospf" on page 1065
- "show ipv6 ospf database" on page 1067
- "show ipv6 ospf database external" on page 1069
- "show ipv6 ospf database grace" on page 1070
- "show ipv6 ospf database inter-prefix" on page 1071
- "show ipv6 ospf database inter-router" on page 1072
- "show ipv6 ospf database intra-prefix" on page 1073
- "show ipv6 ospf database link" on page 1074
- "show ipv6 ospf database network" on page 1075
- "show ipv6 ospf database router" on page 1077
- "show ipv6 ospf interface" on page 1082
- "show ipv6 ospf neighbor" on page 1084
- "show ipv6 ospf route" on page 1086
- "show ipv6 ospf virtual-links" on page 1088

- "summary-address (IPv6 OSPF)" on page 1089
- "timers spf (IPv6 OSPF) (deprecated)" on page 1091
- "timers spf exp (IPv6 OSPF)" on page 1092
- "undebug ipv6 ospf events" on page 1093
- "undebug ipv6 ospf ifsm" on page 1094
- "undebug ipv6 ospf lsa" on page 1095
- "undebug ipv6 ospf nfsm" on page 1096
- "undebug ipv6 ospf packet" on page 1097
- "undebug ipv6 ospf route" on page 1098

abr-type

Overview Use this command to set an OSPF Area Border Router (ABR) type.

Use the **no** variant of this command to revert the ABR type to the default setting (cisco).

Syntax

```
abr-type {cisco|ibm|standard}
no abr-type {cisco|ibm|standard}
```

Parameter	Description
`cisco`	Specifies an alternative ABR using Cisco implementation (RFC 3509). This is the default ABR type.
`ibm`	Specifies an alternative ABR using IBM implementation (RFC 3509).
`standard`	Specifies a standard behavior ABR (RFC 2328).

Default ABR type cisco

Mode Router Configuration

Usage Specifying the ABR type allows better interoperation between different implementations. This command is specially useful in a multi-vendor environment. The different ABR types are:

- Cisco ABR Type: By this definition, a router is considered an ABR if it has more than one area actively attached and one of them is the backbone area.
- IBM ABR Type: By this definition, a router is considered an ABR if it has more than one area actively attached and the backbone area is configured. In this case the configured backbone need not be actively connected.
- Standard ABR Type: By this definition, a router is considered an ABR if it has more than one area actively attached to it.

Example To set the ABR type to “ibm” use the following commands:

```
awplus# configure terminal
awplus(config)# router ipv6 ospf 100
awplus(config-router)# abr-type ibm
```

area authentication ipsec spi

Overview Use this command in Router Configuration mode to enable either MD5 (Message-Digest 5) or SHA1 (Secure Hash Algorithm 1) authentication for a specified OSPF area.

Use the **no** variant of this command in Router Configuration mode to disable the authentication configured for a specified OSPF area.

Syntax

```
area <area-id> authentication ipsec spi <256-4294967295> {md5 <MD5-key>|sha1 <SHA1-key>}
no area <area-id> authentication ipsec spi <256-4294967295>
```

Parameter	Description	
<area-id>	The OSPF area that you are specifying the summary route default-cost for. This can be entered in either dotted decimal format or normal decimal format. Use one of the following formats:	
	<ip-addr>	OSPF area-ID expressed in IPv4 address format A.B.C.D.
	<0-4294967295>	OSPF area-ID expressed as a decimal number within the range shown.
	For example, the values 0.0.1.2 and decimal 258 would both define the same area-ID.	
<256-4294967295>	Specify an SPI (Security Parameters Index) value in the range 256 to 4294967295, entered as a decimal integer.	
md5	Specify the MD5 (Message-Digest 5) hashing algorithm.	
<MD5-key>	Enter an MD5 key containing up to 32 hexadecimal characters.	
sha1	Specify the SHA-1 (Secure Hash Algorithm 1) hashing algorithm.	
<SHA1-key>	Enter an SHA-1 key containing up to 40 hexadecimal characters.	

Mode Router Configuration

Usage Use this command on an OSPFv3 area, use the area virtual-link authentication ipsec spi command on an OSPFv3 area virtual link. Configure the same SPI (Security Parameters Index) value on all interfaces that connect to the same link. SPI values are used by link interfaces. Use a different SPI value for a different link interface when using OSPFv3 with link interfaces.

Use the **sha1** keyword to choose SHA-1 authentication instead of entering the **md5** keyword to use MD5 authentication. The SHA-1 algorithm is more secure than the MD5 algorithm. SHA-1 uses a 40 hexadecimal character key instead of a 32 hexadecimal character key as used for MD5 authentication.

See the OSPFv3 Feature Overview and Configuration Guide for more information and examples.

NOTE: *You can configure an authentication security policy (SPI) on an OSPFv3 area with this command, or on a VLAN interface with the ipv6 ospf authentication spi command.*

When you configure authentication for an area, the security policy is applied to all VLAN interfaces in the area. However, Allied Telesis recommends a different authentication security policy is applied to each interface for higher security.

If you apply the `ipv6 ospf authentication null` command this affects authentication configured on both the VLAN interface and the OSPFv3 area.

This is due to OSPFv3 hello messages ingressing VLAN interfaces, which are part of area authentication, not being authenticated. So neighbors time out.

Example To enable MD5 authentication with a 32 hexadecimal character key for OPSPF area 1, use the commands:

```
awplus# configure terminal
awplus(config)# router ipv6 ospf
awplus(config-router)# area 1 authentication ipsec spi 1000 md5
1234567890ABCDEF1234567890ABCDEF
```

To enable SHA-1 authentication with a 40 hexadecimal character key for OPSPF area 1, use the commands:

```
awplus# configure terminal
awplus(config)# router ipv6 ospf
awplus(config-router)# area 1 authentication ipsec spi 1000
sha1 1234567890ABCDEF1234567890ABCDEF12345678
```

To disable authentication for OPSPF area 1, use the commands:

```
awplus# configure terminal
awplus(config)# router ipv6 ospf
awplus(config-router)# no area 1 authentication ipsec spi 1000
```

Related Commands

area encryption ipsec spi esp

area virtual-link authentication ipsec spi

area virtual-link encryption ipsec spi

ipv6 ospf authentication spi

ipv6 ospf encryption spi esp

show ipv6 ospf

area default-cost (IPv6 OSPF)

Overview This command specifies a cost for the default summary route sent into a stub area.

The **no** variant of this command removes the assigned default-route cost.

Syntax

```
area <area-id> default-cost <0-16777215>
no area <area-id> default-cost
```

Parameter	Description	
<area-id>	The OSPF area that you are specifying the summary route default-cost for. This can be entered in either dotted decimal format or normal decimal format. Use one of the following formats:	
	<ip-addr>	OSPF area-ID expressed in IPv4 address format A.B.C.D.
	<0-4294967295>	OSPF area-ID expressed as a decimal number within the range shown.
	For example, the values 0.0.1.2 and decimal 258 would both define the same area-ID.	
`default-cost`	Indicates the cost for the default summary route used for a stub area. Default: **1**	

Mode Router Configuration

Usage The default-cost option provides the metric for the summary default route, generated by the area border router, into the stub area. Use this option only on an area border router that is attached to the stub area.

Example To set the default cost to 10 in area 1 for the OSPF process P2, use the commands:

```
awplus# configure terminal
awplus(config)# router ipv6 ospf P2
awplus(config-router)# area 1 default-cost 10
```

Related Commands area stub (IPv6 OSPF)

area encryption ipsec spi esp

Overview Use this command in Router Configuration mode to enable either AES-CBC (Advanced Encryption Standard-Cipher Block Chaining) or 3DES (Triple Data Encryption Standard) ESP (Encapsulating Security Payload) encryption for a specified OSPF area.

Use the **no** variant of this command in Router Configuration mode to disable the encryption configured for a specified OSPF area.

Syntax

```
area <area-id> encryption ipsec spi <256-4294967295> esp
{aes-cbc <AES-CBC-key>|3des <3DES-key>|null}{md5
<MD5-key>|sha1 <SHA1-key>}
```

```
no area <area-id> encryption ipsec spi <256-4294967295>
```

Parameter	Description	
<area-id>	The OSPF area that you are specifying the summary route default-cost for. This can be entered in either dotted decimal format or normal decimal format. Use one of the following formats:	
	<ip-addr>	OSPF area-ID expressed in IPv4 address format A.B.C.D.
	<0-4294967295>	OSPF area-ID expressed as a decimal number within the range shown.
	For example, the values 0.0.1.2 and decimal 258 would both define the same area-ID.	
<256-4294967295>	Specify an SPI (Security Parameters Index) value in the range 256 to 4294967295, entered as a decimal integer.	
esp	Specify the esp keyword (Encapsulating Security Payload) to then apply either AES-CBC or 3DES encryption.	
aes-cbc	Specify this keyword to enable AES-CBC (Advanced Encryption Standard-Cipher Block Chaining) encryption.	
<AES-CBC-key>	Enter an AES-CBC key containing either 32, 48, or 64 hexadecimal characters.	
3des	Specify 3DES (Triple Data Encryption Standard) encryption.	
<3DES-key>	Enter a 3DES key containing 48 hexadecimal characters.	
null	Specify ESP without AES-CBC or 3DES encryption applied.	
md5	Specify the MD5 (Message-Digest 5) encryption algorithm.	
<MD5-key>	Enter an MD5 key containing 32 hexadecimal characters.	
sha1	Specify the SHA-1 (Secure Hash Algorithm 1) encryption algorithm.	
<SHA1-key>	Enter an SHA-1 key containing 40 hexadecimal characters.	

Mode Router Configuration

Usage When you issue this command, authentication and encryption are both enabled.

Use this command on an OSPFv3 area, use the area virtual-link encryption ipsec spi command on an OSPFv3 area virtual link. Configure the same SPI (Security Parameters Index) value on all interfaces that connect to the same link. SPI values are used by link interfaces. Use a different SPI value for a different link interface when using OSPFv3 with link interfaces.

Security is achieved using the IPv6 ESP extension header. The IPv6 ESP extension header is used to provide confidentiality, integrity, authentication, and confidentiality. Authentication fields are removed from OSPF for IPv6 packet headers, so applying IPv6 ESP extension headers are required for integrity, authentication, and confidentiality.

Use the **sha1** keyword to choose SHA-1 authentication instead of entering the **md5** keyword to use MD5 authentication. The SHA-1 algorithm is more secure than the MD5 algorithm. SHA-1 uses a 40 hexadecimal character key instead of a 32 hexadecimal character key as used for MD5 authentication.

See the OSPFv3 Feature Overview and Configuration Guide for more information and examples.

NOTE: *You can configure an encryption security policy (SPI) on an OSPFv3 area with this command, or on a VLAN interface with the ipv6 ospf encryption spi esp command.*

When you configure encryption for an area, the security policy is applied to all VLAN interfaces in the area. However, Allied Telesis recommends a different encryption security policy is applied to each interface for higher security.

If you apply the `ipv6 ospf encryption null` *command this affects encryption configured on both the VLAN interface and the OSPFv3 area.*

This is due to OSPFv3 hello messages ingressing VLAN interfaces, which are part of area encryption, not being being encrypted. So neighbors time out.

Example To enable ESP encryption, but not apply an AES-CBC key or an 3DES key, and MD5 authentication with a 32 hexadecimal character key for OPSPF area 1, use the commands:

```
awplus# configure terminal
awplus(config)# router ipv6 ospf
awplus(config-router)# area 1 encryption ipsec spi 1000 esp null
md5 1234567890ABCDEF1234567890ABCDEF
```

To enable ESP encryption, but not apply an AES-CBC key or an 3DES key, and SHA-1 authentication with a 40 hexadecimal character key for OPSPF area 1, use the commands:

```
awplus# configure terminal
awplus(config)# router ipv6 ospf
awplus(config-router)# area 1 encryption ipsec spi 1000 esp null
sha1 1234567890ABCDEF1234567890ABCDEF12345678
```

To enable ESP encryption with a 48 hexadecimal character 3DES key and a 32 hexadecimal character MD5 authentication for OPSPF area 1, use the commands:

```
awplus# configure terminal
awplus(config)# router ipv6 ospf
awplus(config-router)# area 1 encryption ipsec spi 1000 esp 3des
1234567890ABCDEF1234567890ABCDEF1234567890ABCDEF md5
1234567890ABCDEF1234567890ABCDEF
```

To enable ESP encryption with a 32 hexadecimal character AES-CBC key, and a 40 hexadecimal character SHA-1 authentication key for OPSPF area 1, use the commands:

```
awplus# configure terminal
awplus(config)# router ipv6 ospf
awplus(config-router)# area 1 encryption ipsec spi 1000 esp
aes-cbc 1234567890ABCDEF1234567890ABCDEF sha1
1234567890ABCDEF1234567890ABCDEF12345678
```

To disable ESP encryption for OPSPF area 1, use the commands:

```
awplus# configure terminal
awplus(config)# router ipv6 ospf
awplus(config-router)# no area 1 encryption ipsec spi 1000
```

Related Commands

area authentication ipsec spi

area virtual-link authentication ipsec spi

area virtual-link encryption ipsec spi

ipv6 ospf authentication spi

ipv6 ospf encryption spi esp

show ipv6 ospf

area range (IPv6 OSPF)

Overview Use this command to summarize OSPFv3 routes at an area boundary, configuring an IPv6 address range which consolidates OSPFv3 routes. By default, this feature is not enabled.

A summary route created by this command is then advertised to other areas by the Area Border Routers (ABRs). In this way, routing information is condensed at area boundaries and outside the area so that routes are exchanged between areas in an efficient manner.

If the network numbers in an area are arranged into sets of contiguous routes, the ABRs can be configured to advertise a summary route that covers all the individual networks within the area that fall into the specified range.

The **no** variant of this command disables this function and restores default behavior.

Syntax

```
area <area-id> range <ipv6address/prefix-length>
[advertise|not-advertise]

no area <area-id> range <ipv6address/prefix-length>
```

Parameter	Description	
<area-id>	The OSPFv3 area that you summarizing the routes for. Use one of the following formats: This can be entered in either dotted decimal format or normal decimal format.	
	<A.B.C.D>	OSPF area-ID expressed in IPv4 address format A.B.C.D.
	<0-4294967295>	OSPF area-ID expressed as a decimal number within the range shown.
	For example the values 0.0.1.2 and decimal 258 would both define the same area-ID.	
<ip-addr/prefix-length>	The IPv6 address uses the format X:X::X:X/Prefix-Length. The prefix-length is usually set between 0 and 64.	
`advertise`	Advertise this range as a summary route into other areas.	
`not-advertise`	Do not advertise this range.	

Default The area range is not configured by default. The area range is advertised if it is configured.

Mode Router Configuration

Usage You can configure multiple ranges on a single area with multiple instances of this command, so OSPFv3 summarizes addresses for different sets of IPv6 address ranges.

Ensure OSPFv3 IPv6 routes exist in the area range for advertisement before using this command.

Example

```
awplus# configure terminal
awplus(config)# router ipv6 ospf P2
awplus(config-router)# area 1 range 2000::/3
```

area stub (IPv6 OSPF)

Overview This command defines an OSPF area as a stub area. By default, no stub area is defined.

Use this command when routers in the area do not require learning about external LSAs. You can define the area as a totally stubby area by configuring the Area Border Router of that area using the **area stub no-summary** command.

The **no** variant of this command removes this definition.

Syntax

```
area <area-id> stub [no-summary]
no area <area-id> stub [no-summary]
```

Parameter	Description	
<area-id>	The OSPF area that you are configuring as a stub area. Use one of the following formats: This can be entered in either dotted decimal format or normal decimal format. For example the values dotted decimal 0.0.1.2 and decimal 258 would both define the same area-ID.	
	<A.B.C.D>	OSPF area-ID, expressed in the IPv4 address format *<A.B.C.D>*.
	<0-4294967295>	OSPF area-ID expressed as a decimal number within the range shown.
	For example the values dotted decimal 0.0.1.2 and decimal 258 would both define the same area-ID.	
no-summary	Stops an ABR from sending summary link advertisements into the stub area.	

Mode Router Configuration

Usage There are two stub area router configuration commands: the **area stub** and **area default- cost** commands. In all routers attached to the stub area, configure the area by using the **area stub** command. For an area border router (ABR) attached to the stub area, also use the **area default-cost** command.

Example

```
awplus# configure terminal
awplus(config)# router ipv6 ospf 100
awplus(config-router)# area 100 stub
```

Related Commands area default-cost (IPv6 OSPF)

area virtual-link (IPv6 OSPF)

Overview

This command configures a link between a non-backbone area and the backbone, through other non-backbone areas.

In OSPF, all non-backbone areas must be connected to a backbone area. If the connection to the backbone is lost, the virtual link repairs the connection.

The **no** variant of this command removes the virtual link.

Syntax

```
area <area-id> virtual-link <router-id>

no area <area-id>  virtual-link <router-id>

area <area-id>  virtual-link <router-id>

no area <area-id>  virtual-link <router-id>

area <area-id>  virtual-link <router-id> [hello-interval
<1-65535>]  [retransmit-interval <1-65535>] [transmit-delay
<1-65535>]

no area <area-id>  virtual-link <router-id> [hello-interval]
[retransmit-interval] [transmit-delay]
```

Parameter	Description	
<area-id>	The area-ID of the transit area that the virtual link passes through. This can be entered in either dotted decimal format or normal decimal format as shown below.	
	<A.B.C.D>	OSPF area-ID, expressed in the IPv4 address format *<A.B.C.D>*.
	<0-4294967295>	OSPF area-ID expressed as a decimal number within the range shown.
	For example the values dotted decimal 0.0.1.2 and decimal 258 would both define the same area-ID.	
<router-id>	The OSPF router ID of the virtual link neighbor.	
dead-interval	If no packets are received from a particular neighbor for dead-interval seconds, the router considers the neighbor router to be off-line. Default: 40 seconds	
	<1-65535>	The number of seconds in the interval.
hello-interval	The interval the router waits before it sends a hello packet. Default: 10 seconds	
	<1-65535>	The number of seconds in the interval.
retransmit-interval	The interval the router waits before it retransmits a packet. Default: 5 seconds	
	<1-65535>	The number of seconds in the interval.

Parameter	Description	
`transmit-delay`	The interval the router waits before it transmits a packet. Default: 1 seconds	
	<1-65535>	The number of seconds in the interval.

Mode Router Configuration

Usage You can configure virtual links between any two backbone routers that have an interface to a common non-backbone area. The protocol treats these two routers, joined by a virtual link, as if they were connected by an unnumbered point-to-point network. To configure a virtual link, you require:

- The transit area-ID, i.e. the area-ID of the non-backbone area that the two backbone routers are both connected to.
- The corresponding virtual link neighbor's router ID. To see the router ID use the show ipv6 ospf command.

Configure the **hello-interval** to be the same for all routers attached to a common network. A short **hello-interval** results in the router detecting topological changes faster but also an increase in the routing traffic.

The **retransmit-interval** is the expected round-trip delay between any two routers in a network. Set the value to be greater than the expected round-trip delay to avoid needless retransmissions.

The **transmit-delay** is the time taken to transmit a link state update packet on the interface. Before transmission, the link state advertisements in the update packet, are incremented by this amount. Set the **transmit-delay** to be greater than zero. Also, take into account the transmission and propagation delays for the interface.

Example To configure a virtual link through area 1to the router with router-ID 10.10.11.50, use the following commands:

```
awplus# configure terminal
awplus(config)# router ipv6 ospf 100
awplus(config-router)# area 1 virtual-link 10.10.11.50 hello 5
dead 10
```

Related Commands show ipv6 ospf

area virtual-link authentication ipsec spi

Overview Use this command in Router Configuration mode to enable authentication for virtual links in a specified OSPF area.

Use the **no** variant of this command in Router Configuration mode to disable authentication for virtual links in a specified OSPF area.

Syntax

```
area <area-id> virtual-link <router-ID> authentication ipsec
spi <256-4294967295> {md5 <MD5-key>|sha1 <SHA1-key>}
```

```
no area <area-id> virtual-link <router-ID> authentication ipsec
spi <256-4294967295>
```

Parameter	Description	
<area-id>	The OSPF area that you are specifying the summary route default-cost for. This can be entered in either dotted decimal format or normal decimal format. Use one of the following formats:	
	<ip-addr>	OSPF area-ID expressed in IPv4 address format A.B.C.D.
	<0-4294967295>	OSPF area-ID expressed as a decimal number within the range shown.
	For example, the values 0.0.1.2 and decimal 258 would both define the same area-ID.	
`virtual-link`	Specify a virtual link and its parameters.	
<router-ID>	Enter a router ID associated with a virtual link neighbor in IPv4 address format A.B.C.D.	
`authentication`	Specify this keyword to enable authentication.	
`ipsec`	Specify this keyword to use IPsec authentication.	
`spi`	Specify this keyword to set the SPI (Security Parameters Index).	
<256-4294967295>	Specify an SPI (Security Parameters Index) value in the range 256 to 4294967295, entered as a decimal integer.	
`md5`	Specify the MD5 (Message-Digest 5) encryption algorithm.	
<MD5-key>	Enter an MD5 key containing 32 hexadecimal characters.	
`sha1`	Specify the SHA-1 (Secure Hash Algorithm 1) encryption algorithm.	
<SHA1-key>	Enter an SHA-1 key containing 40 hexadecimal characters.	

Mode Router Configuration

Usage Use this command on an OSPFv3 area virtual link, use the area authentication ipsec spi command on an OSPFv3 area. Configure the same SPI (Security Parameters Index) value on all interfaces that connect to the same link. SPI values are used by

link interfaces. Use a different SPI value for a different link interface when using OSPFv3 with link interfaces.

OSPFv3 areas are connected to a backbone area. Virtual links can be configured to repair lost connections to a backbone area for OSPFv3 areas. To configure an OSPFv3 virtual link, use a router ID instead of the IPv6 prefix of the router.

Use the **sha1** keyword to choose SHA-1 authentication instead of entering the **md5** keyword to use MD5 authentication. The SHA-1 algorithm is more secure than the MD5 algorithm. SHA-1 uses a 40 hexadecimal character key instead of a 32 hexadecimal character key as used for MD5 authentication.

See the OSPFv3 Feature Overview and Configuration Guide for more information and examples.

Example To enable MD5 authentication with a 32 hexadecimal character key for virtual links in OPSPF area 1, use the commands:

```
awplus# configure terminal
awplus(config)# router ipv6 ospf
awplus(config-router)# area 1 virtual-link 10.0.0.1
authentication ipsec spi 1000 md5
1234567890ABCDEF1234567890ABCDEF
```

To enable SHA-1 authentication with a 40 hexadecimal character key for virtual links in OPSPF area 1, use the commands:

```
awplus# configure terminal
awplus(config)# router ipv6 ospf
awplus(config-router)# area 1 virtual-link 10.0.0.1
authentication ipsec spi 1000 sha1
1234567890ABCDEF1234567890ABCDEF12345678
```

To disable authentication for virtual links in OPSPF area 1, use the commands:

```
awplus# configure terminal
awplus(config)# router ipv6 ospf
awplus(config-router)# no area 1 virtual-link ipsec spi 1000
```

Related Commands

area authentication ipsec spi

area encryption ipsec spi esp

area virtual-link encryption ipsec spi

show ipv6 ospf virtual-links

area virtual-link encryption ipsec spi

Overview Use this command in Router Configuration mode to enable either AES-CBC (Advanced Encryption Standard-Cipher Block Chaining) or 3DES (Triple Data Encryption Standard) ESP (Encapsulating Security Payload) encryption for virtual links in a specified OSPF area.

Use the **no** variant of this command in Router Configuration mode to disable encryption configured for virtual links in a specified OSPF area.

Syntax

```
area <area-id> virtual-link <router-ID> encryption ipsec spi
<256-4294967295> esp {aes-cbc <AES-CBC-key>|3des
<3DES-key>|null}{md5 <MD5-key>|sha1 <SHA1-key>}

no area <area-id> encryption ipsec spi <256-4294967295>
```

Parameter	Description	
<area-id>	The OSPF area that you are specifying the summary route default- cost for. This can be entered in either dotted decimal format or normal decimal format. Use one of the following formats:	
	<ip-addr>	OSPF area-ID expressed in IPv4 address format A.B.C.D.
	<0-4294967295>	OSPF area-ID expressed as a decimal number within the range shown.
	For example, the values 0.0.1.2 and decimal 258 would both define the same area-ID.	
`virtual-link`	Specify a virtual link and its parameters.	
<router-ID>	Enter a router ID associated with a virtual link neighbor in IPv4 address format A.B.C.D.	
`encryption`	Specify this keyword to enable encryption.	
`ipsec`	Specify this keyword to use IPsec authentication.	
`spi`	Specify this keyword to set the SPI (Security Parameters Index).	
<256-4294967295>	Specify an SPI (Security Parameters Index) value in the range 256 to 4294967295, entered as a decimal integer.	
`esp`	Specify the esp keyword (Encapsulating Security Payload) to then apply either AES-CBC or 3DES encryption.	
`aes-cbc`	Specify this keyword to enable AES-CBC (Advanced Encryption Standard-Cipher Block Chaining) encryption.	
<AES-CBC-key>	Enter an AES-CBC key containing either 32, 48, or 64 hexadecimal characters.	
`3des`	Specify 3DES (Triple Data Encryption Standard) encryption.	
<3DES-key>	Enter a 3DES key containing 48 hexadecimal characters.	

Parameter	Description
`null`	Specify ESP without AES-CBC or 3DES encryption applied.
`md5`	Specify the MD5 (Message-Digest 5) encryption algorithm.
<MD5-key>	Enter an MD5 key containing 32 hexadecimal characters.
`sha1`	Specify the SHA-1 (Secure Hash Algorithm 1) encryption algorithm.
<SHA1-key>	Enter an SHA-1 key containing 40 hexadecimal characters.

Mode Router Configuration

Usage When you issue this command, authentication and encryption are both enabled.

Use this command on an OSPFv3 area virtual link, use the area encryption ipsec spi esp command on an OSPFv3 area. Configure the same SPI (Security Parameters Index) value on all interfaces that connect to the same link. SPI values are used by link interfaces. Use a different SPI value for a different link interface when using OSPFv3 with link interfaces.

Security is achieved using the IPv6 ESP extension header. ESP is used to provide confidentiality, integrity, authentication, and confidentiality. Authentication fields are removed from OSPF for IPv6 packet headers. The IPv6 ESP extension header is required for integrity, authentication, and confidentiality.

Note that interface configuration takes priority over area configuration. If an interface configuration is removed then an area configuration is applied to an interface instead.

Use the **sha1** keyword to choose SHA-1 authentication instead of entering the **md5** keyword to use MD5 authentication. The SHA-1 algorithm is more secure than the MD5 algorithm. SHA-1 uses a 40 hexadecimal character key instead of a 32 hexadecimal character key as used for MD5 authentication.

See the OSPFv3 Feature Overview and Configuration Guide for more information and examples.

Example To enable ESP encryption, but not apply an AES-CBC key or a 3DES key, and MD5 authentication with a 32 hexadecimal character key for virtual links in OPSPF area 1, use the commands:

```
awplus# configure terminal
awplus(config)# router ipv6 ospf
awplus(config-router)# area 1 virtual-link 10.0.0.1 encryption
ipsec spi 1000 esp null md5 1234567890ABCDEF1234567890ABCDEF
```

To enable ESP encryption, but not apply an AES-CBC key or a 3DES key, and SHA-1 authentication with a 40 hexadecimal character key for virtual links in OPSPF area 1, use the commands:

```
awplus# configure terminal
awplus(config)# router ipv6 ospf
awplus(config-router)# area 1 virtual-link 10.0.0.1 encryption
ipsec spi 1000 esp null sha1
1234567890ABCDEF1234567890ABCDEF12345678
```

To enable ESP encryption with a 32 hexadecimal character AES-CBC key and a 40 hexadecimal character SHA-1 authentication key for virtual links in OPSPF area 1, use the commands:

```
awplus# configure terminal
awplus(config)# router ipv6 ospf
awplus(config-router)# area 1 virtual-link 10.0.0.1 encryption
ipsec spi 1000 esp aes-cbc 1234567890ABCDEF1234567890ABCDEF
sha1 1234567890ABCDEF1234567890ABCDEF12345678
```

To enable ESP encryption with a 48 hexadecimal character 3DES key and a 40 hexadecimal character SHA-1 authentication key for virtual links in OPSPF area 1, use the commands:

```
awplus# configure terminal
awplus(config)# router ipv6 ospf
awplus(config-router)# area 1 virtual-link 10.0.0.1 encryption
ipsec spi 1000 esp 3des
1234567890ABCDEF1234567890ABCDEF1234567890ABCDEF sha1
1234567890ABCDEF1234567890ABCDEF12345678
```

To disable authentication for virtual links in OPSPF area 1, use the commands:

```
awplus# configure terminal
awplus(config)# router ipv6 ospf
awplus(config-router)# no area 1 virtual-link 10.0.0.1
authentication ipsec spi 1000
```

Related Commands

area authentication ipsec spi

area encryption ipsec spi esp

area virtual-link authentication ipsec spi

show ipv6 ospf virtual-links

auto-cost reference bandwidth (IPv6 OSPF)

Overview This command controls how OSPF calculates default metrics for the interface.

Use the **no** variant of this command to assign cost based only on the interface bandwidth.

Syntax

```
auto-cost reference-bandwidth <1-4294967>
no auto-cost reference-bandwidth
```

Parameter	Description
<1-4294967>	The reference bandwidth, measured in Mbits per second (Mbps).

Default 1000 Mbps

Usage By default, OSPF calculates the OSPF metric for an interface by dividing the reference bandwidth by the interface bandwidth. The default for the reference bandwidth is 1000 Mbps. As a result, if this default is used, there is very little difference between the metrics applied to interfaces of increasing bandwidth beyond 1000 Mbps.

The auto-cost command is used to alter this reference bandwidth in order to give a real difference between the metrics of high bandwidth links of differing bandwidths. In a network that has multiple links with high bandwidths, specify a larger reference bandwidth value to differentiate the costs on those links.

Cost is calculated by dividing the reference bandwidth (Mbps) by the layer 3 interface (Switched Virtual Interface (SVI), Loopback or Ethernet interface) bandwidth. Interface bandwidth may be altered by using the bandwidth command as the SVI does not auto-detect the bandwidth based on the speed of associated device ports.

When the reference bandwidth calculation results in a cost integer greater than 1 but contains a fractional value (the value after the decimal point), the result rounds down to the nearest integer. The following example shows how the cost is calculated.

The reference bandwidth is 1000 Mbps and the interface bandwidth is 7 Mbps.

Calculation = 1000/7

Calculation result = 142.85 (integer of 142, fractional value of 0.85)

Result after rounding down to the nearest integer = 142 (Interface cost is 142)

When the reference bandwidth calculation results in a cost less than 1, it is rounded up to the nearest integer which is 1. The following example shows how the cost is calculated.

The reference bandwidth is 1000 Mbps and the interface bandwidth is 10000 Mbps.

Calculation = 1000/10000

Calculation result = 0.1

Result after rounding up to the nearest integer = 1 (Interface cost is 1)

The auto-cost reference bandwidth value should be consistent across all OSPF routers in the OSPF process.

Note that using the ipv6 ospf cost command on a layer 3 interface will override the cost calculated by this command.

Mode Router Configuration

Example

```
awplus# configure terminal
awplus(config)# router ipv6 ospf 20
awplus(config-router)# auto-cost reference-bandwidth 1000
```

Related Commands ipv6 ospf cost

bandwidth

Overview Use this command to specify the maximum bandwidth to be used for each VLAN interface. The bandwidth value is in bits per second. OSPF uses this to calculate metrics for the VLAN interface.

The **no** variant of this command removes any applied bandwidth value and replaces it with a value equal to the lowest port speed within that VLAN.

Syntax

```
bandwidth  <bandwidth-setting>
no bandwidth
```

Parameter	Description
<bandwidth-setting>	Sets the bandwidth for the interface. Enter a value in the range 1 to 10000000000 bits per second. Note that to avoid entering many zeros, you can add k, m, or g to internally add 3, 6 or 9 zeros to the number entered. For example entering 1k is the same as entering 1000.

Mode Interface Configuration for a VLAN interface.

Example To set the bandwidth on VLAN2 to be 1 Mbps, use the following commands:

```
awplus# configure terminal
awplus(config)# interface vlan2
awplus(config-if)# bandwidth 1000000
```

Or

```
awplus(config-if)# bandwidth 1m
```

Related Commands show interface

clear ipv6 ospf process

Overview This command clears and restarts the IPv6 OSPF routing process. Specify the Process ID to clear one particular OSPF process. When no Process ID is specified, this command clears all running OSPF processes.

Syntax

```
clear ipv6 ospf [<0-65535>] process
```

Parameter	Description
<0-65535>	The routing process ID.

Mode Privileged Exec

Example

```
awplus# clear ipv6 ospf process
```

debug ipv6 ospf events

Overview This command enables IPv6 OSPF debugging for event troubleshooting.

To enable all debugging options, specify **debug ipv6 ospf event** with no additional parameters.

The **no** and **undebug** variants of this command disable OSPF debugging. Using this command with no parameters entered, will disable debugging for all parameter options.

Syntax

```
debug ipv6 ospf events [abr] [asbr] [os][router] [vlink]
no debug ipv6 ospf events [abr] [asbr] [os] [router] [vlink]
```

Parameter	Description
`abr`	Shows ABR events.
`asbr`	Shows ASBR events.
`router`	Shows other router events.
`os`	Shows OS events.
`vlink`	Shows virtual link events.

Mode Privileged Exec and Global Configuration

Example To enable IPv6 event debugging and show ABR events, use the following command:

```
awplus# debug ipv6 ospf events asbr
```

debug ipv6 ospf ifsm

Overview This command specifies debugging options for IPv6 OSPF Interface Finite State Machine (IFSM) troubleshooting.

To enable all debugging options, specify **debug ipv6 ospf ifsm** with no additional parameters.

The **no** and **undebug** variants of this command disable IPv6 OSPF IFSM debugging. Use these commands without parameters to disable all the options.

Syntax

```
debug ipv6 ospf ifsm [events] [status] [timers]
no debug ipv6 ospf ifsm [events] [status] [timers]
```

Parameter	Description
`events`	Displays IFSM event information.
`status`	Displays IFSM status information.
`timers`	Displays IFSM timer information.

Mode Privileged Exec and Global Configuration

Example To specify IPv6 OSPF debugging options to display IPv6 OSPF IFSM events information, use the following commands:

```
awplus# debug ipv6 ospf ifsm events
```

Related Commands terminal monitor

undebug ipv6 ospf ifsm

debug ipv6 ospf lsa

Overview This command enables debugging options for IPv6 OSPF Link State Advertisements (LSA) troubleshooting. This displays information related to internal operations of LSAs.

To enable all debugging options, specify **debug ipv6 ospf lsa** with no additional parameters.

The **no** and **undebug** variants of this command disable IPv6 OSPF LSA debugging. Use this command without parameters to disable all the options.

Syntax

```
debug ipv6 ospf lsa [flooding] [generate] [install] [maxage]
[refresh]
```

```
no debug ipv6 ospf lsa [flooding] [generate] [install] [maxage]
[refresh]
```

Parameter	Description
`flooding`	Displays LSA flooding.
`generate`	Displays LSA generation.
`install`	Show LSA installation.
`maxage`	Shows maximum age of the LSA in seconds.
`refresh`	Displays LSA refresh.

Mode Privileged Exec and Global Configuration

Examples To enable debugging for IPv6 OSPF refresh LSA, use the following commands:

```
awplus# debug ipv6 ospf lsa refresh
```

Related Commands terminal monitor

undebug ipv6 ospf lsa

debug ipv6 ospf nfsm

Overview This command enables debugging options for IPv6 OSPF Neighbor Finite State Machines (NFSMs).

To enable all debugging options, specify **debug ipv6 ospf nfsm** with no additional parameters.

The **no** and **undebug** variants of this command disable IPv6 OSPF NFSM debugging. Use this command without parameters to disable all the options.

Syntax

```
debug ipv6 ospf nfsm [events] [status] [timers]
no debug ipv6 ospf nfsm [events] [status] [timers]
```

Parameter	Description
`events`	Displays NFSM event information.
`status`	Displays NSFM status information.
`timers`	Displays NFSM timer information.

Mode Privileged Exec and Global Configuration

Examples To enable IPv6 debugging option to display timer information, use the following command:

```
awplus# debug ipv6 ospf nfsm timers
```

Related Commands terminal monitor

undebug ipv6 ospf nfsm

debug ipv6 ospf packet

Overview This command enables debugging options for IPv6 OSPF packets.

To enable all debugging options, specify **debug ipv6 ospf packet** with no additional parameters.

The **no** and **undebug** variants of this command disable IPv6 OSPF packet debugging. Use this command without parameters to disable all options.

Syntax

```
debug ipv6 ospf packet [dd] [detail] [hello] [ls-ack]
[ls-request] [ls-update] [recv] [send]
```

```
no debug ipv6 ospf packet [dd] [detail] [hello] [ls-ack]
[ls-request] [ls-update] [recv] [send]
```

Parameter	Description
`dd`	Specifies debugging for IPv6 OSPF database descriptions.
`detail`	Sets the debug option to detailed information.
`hello`	Specifies debugging for IPv6 OSPF hello packets.
`ls-ack`	Specifies debugging for IPv6 OSPF link state acknowledgments.
`ls-request`	Specifies debugging for IPv6 OSPF link state requests.
`ls-update`	Specifies debugging for IPv6 OSPF link state updates.
`recv`	Specifies the debug option set for received packets.
`send`	Specifies the debug option set for sent packets.

Mode Privileged Exec and Global Configuration

Examples To enable debugging for hello packets, use the following command:

```
awplus# debug ipv6 ospf packet hello
```

Related Commands terminal monitor

undebug ipv6 ospf packet

debug ipv6 ospf route

Overview This command enables debugging of route calculation. Use this command without parameters to turn on all the options.

The **no** and **undebug** variants of this command disable IPv6 OSPF route debugging. Use this command without parameters to disable all options.

Syntax

```
debug ipv6 ospf route [ase] [ia] [install] [spf]
no debug ipv6 ospf route [ase] [ia] [install] [spf]
```

Parameter	Description
`ase`	Specifies the debugging of external route calculation.
`ia`	Specifies the debugging of inter-area route calculation.
`install`	Specifies the debugging of route installation.
`spf`	Specifies the debugging of SPF calculation.

Mode Privileged Exec and Global Configuration

Examples To enable IPv6 route debugging of inter-area route calculations, use the following command:

```
awplus# debug ipv6 ospf route ia
```

Related Commands terminal monitor

undebug ipv6 ospf route

default-information originate

Overview This command creates a default external route into an OSPF routing domain.

When you use the **default-information originate** command to redistribute routes into an OSPF routing domain, then the system acts like an Autonomous System Boundary Router (ASBR). By default, an ASBR does not generate a default route into the OSPF routing domain.

When using this command, also specify the **route-map** <*route-map*> option to avoid a dependency on the default network in the routing table.

The **metric-type** is an external link type associated with the default route advertised into the OSPF routing domain. The value of the external route could be either Type 1 or 2. The default is Type 2.

The **no** variant of this command disables this feature.

Syntax

```
default-information originate [always] [metric <metric>]
[metric-type <1-2>] [route-map <route-map>]
```

```
no default-information originate [always] [metric]
[metric-type] [route-map]
```

Parameter	Description
`always`	Used to advertise the default route regardless of whether there is a default route.
<metric>	The metric value used in creating the default route. Enter a value in the range 0 to 16777214. The default metric value is 10. The value used is specific to the protocol.
<1-2>	External metric type for default routes, either OSPF External Type 1 or Type 2 metrics. Enter the value 1 or 2.
`route-map`	Specifies to use a specific route-map.
<route-map>	The route-map name. It is a string comprised of any characters, numbers or symbols.

Mode Router Configuration

Example

```
awplus# configure terminal
awplus(config)# router ospf 100
awplus(config-router)# default-information originate always
metric 23 metric-type 2 route-map myinfo
```

Related Commands route-map

default-metric (IPv6 OSPF)

Overview This command sets default metric value for routes redistributed into the IPv6 OSPF routing protocol.

The **no** variant of this command returns IPv6 OSPF to using built-in, automatic metric translations, as appropriate for each routing protocol.

Syntax

```
default-metric <0-16777214>
no default-metric [<0-16777214>]
```

Parameter	Description
<1-16777214>	Default metric value appropriate for the specified routing protocol.

Mode Router Configuration

Usage A default metric facilitates redistributing routes even with incompatible metrics. If the metrics do not convert, the default metric provides an alternative and enables the redistribution to continue. The effect of this command is that IPv6 OSPF will use the same metric value for **all** redistributed routes. Use this command in conjunction with the redistribute (IPv6 OSPF) command.

Examples

```
awplus# configure terminal
awplus(config)# router ipv6 ospf 100
awplus(config-router)# default-metric 100
awplus# configure terminal
awplus(config)# router ipv6 ospf 100
awplus(config-router)# no default-metric
```

Related commands redistribute (IPv6 OSPF)

distance (IPv6 OSPF)

Overview This command sets the administrative distance for OSPFv3 routes based on the route type. Your device uses this value to select between two or more routes to the same destination from two different routing protocols. The route with the smallest administrative distance value is added to the Forwarding Information Base (FIB). See the Route Selection Feature Overview and Configuration Guide for more information.

Use the command **distance ospfv3** to set the distance for an entire category of OSPFv3 routes, rather than the specific routes that pass an access list.

Use the command **distance <1-254>**, with no other parameter, to set the same distance for all OSPFv3 route types.

The **no** variant of this command sets the administrative distance for OSPFv3 routes to the default of 110.

Syntax

```
distance <1-254>
distance ospfv3 {external <1-254>|inter-area <1-254>|intra-area <1-254>}
no distance {ospfv3|<1-254>}
```

Parameter	Description
`<1-254>`	Specify the Administrative Distance value for OSPFv3 routes.
`external`	Sets the distance for routes from other routing domains, learned by redistribution. Specify an OSPFv3 external distance in the range *<1-254>*.
`inter-area`	Sets the distance for all routes from one area to another area. Specify an OSPFv3 inter-area distance in the range*<1-254>*.
`intra-area`	Sets the distance for all routes within an area. Specify an OSPFv3 intra-area distance in the range *<1-254>*.

Default The default OSPFv3 administrative distance is 110. The default Administrative Distance for each type of route (intra, inter, or external) is 110.

Mode Router Configuration

Usage The administrative distance rates the trustworthiness of a routing information source. The distance could be any integer from 0 to 254. A higher distance value indicates a lower trust rating. For example, an administrative distance of 254 indicates that the routing information source cannot be trusted and should be ignored.

Use this command to set the distance for an entire group of routes, rather than a specific route that passes an access list.

Examples To set the following administrative distances for route types in OSPF 100:

- 20 for inter-area routes
- 10 for intra-area routes
- 40 for external routes

use the commands:

```
awplus(config)# router ipv6 ospf 100
awplus(config-router)# distance ospfv3 inter-area 20 intra-area
10 external 40
```

To set the administrative distance for all routes in OSPFv3 100 back to the default of 110, use the commands:

```
awplus(config)# router ipv6 ospf 100
awplus(config-router)# no distance ospfv3
```

ipv6 ospf authentication spi

Overview Use this command in Interface Configuration mode to enable either MD5 (Message-Digest 5) or SHA1 (Secure Hash Algorithm 1) authentication for a specified interface.

Use the **no** variant of this command in Interface Configuration mode to disable the authentication configured for a specified interface.

Syntax

```
ipv6 ospf authentication ipsec spi <256-4294967295> {md5 <MD5-key>|sha1 <SHA1-key>}
ipv6 ospf authentication null
no ipv6 ospf authentication ipsec spi <256-4294967295>
```

Parameter	Description
`authentication`	Specify this keyword to enable authentication.
`ipsec`	Specify this keyword to use IPsec authentication.
`spi`	Specify this keyword to set the SPI (Security Parameters Index).
`<256-4294967295>`	Specify an SPI (Security Parameters Index) value in the range 256 to 4294967295, entered as a decimal integer.
`md5`	Specify the MD5 (Message-Digest 5) hashing algorithm.
`<MD5-key>`	Enter an MD5 key containing up to 32 hexadecimal characters.
`sha1`	Specify the SHA-1 (Secure Hash Algorithm 1) hashing algorithm.
`<SHA1-key>`	Enter an SHA-1 key containing up to 40 hexadecimal characters.
`null`	Specify no authentication is applied when no other parameters are applied after this keyword (`ipv6 ospf authentication null`). Note this overrides any existing area authentication configured.

Mode Interface Configuration

Default Authentication is not configured on an interface by default.

Usage Configure the same SPI (Security Parameters Index) value on all interfaces that connect to the same link. SPI values are used by link interfaces. Use a different SPI value for a different link interface when using OSPFv3 with link interfaces.

Use the **sha1** keyword to choose SHA-1 authentication instead of entering the **md5** keyword to use MD5 authentication. The SHA-1 algorithm is more secure than the MD5 algorithm. SHA-1 uses a 40 hexadecimal character key instead of a 32 hexadecimal character key as used for MD5 authentication.

Use the **null** keyword to override existing area authentication. Apply the null keyword if area authentication is already configured to configure authentication on an interface.

Use the **null** keyword to override existing area authentication. Apply the **null** keyword if area authentication is already configured to configure authentication on an interface.

See the OSPFv3 Feature Overview and Configuration Guide for more information and examples.

NOTE: *You can configure an authentication security policy (SPI) on a VLAN interface with this command, or an OSPFv3 area with the area authentication ipsec spi command.*

When you configure authentication for an area, the security policy is applied to all VLAN interfaces in the area. Allied Telesis recommends a different authentication security policy is applied to each interface for higher security.

If you apply the `ipv6 ospf authentication null` command this affects authentication configured on both the VLAN interface and the OSPFv3 area.

This is due to OSPFv3 hello messages ingressing VLAN interfaces, which are part of area authentication, not being authenticated. So neighbors time out.

Example To enable MD5 authentication with a 32 hexadecimal character key for interface VLAN 2, use the commands:

```
awplus# configure terminal
awplus(config)# interface vlan2
awplus(config-if)# area 1 authentication ipsec spi 1000 md5
1234567890ABCDEF1234567890ABCDEF
```

To enable SHA-1 authentication with a 32 hexadecimal character key for interface VLAN 2, use the commands:

```
awplus# configure terminal
awplus(config)# interface vlan2
awplus(config-if)# ipv6 ospf authentication ipsec spi 1000 sha1
1234567890ABCDEF1234567890ABCDEF12345678
```

To specify no authentication is applied to interface VLAN 2, use the commands:

```
awplus# configure terminal
awplus(config)# interface vlan2
awplus(config-if)# ipv6 ospf authentication null
```

To disable authentication for interface VLAN 2, use the commands:

```
awplus# configure terminal
awplus(config)# interface vlan2
awplus(config-if)# no ipv6 ospf authentication ipsec spi 1000
```

Related Commands

area authentication ipsec spi

area encryption ipsec spi esp

ipv6 ospf encryption spi esp

show ipv6 ospf interface

ipv6 ospf cost

Overview This command explicitly specifies the cost of the link-state metric in a router-LSA.

The interface cost indicates the overhead required to send packets across a certain VLAN interface. Use this command to set the VLAN interface cost manually.

The **no** variant of this command resets the VLAN interface cost to the default.

Syntax

```
ipv6 ospf cost <1-65535>
no ipv6 ospf cost
```

Parameter	Description
<1-65535>	The link-state metric.

Default By default there is no static value set and the OSPF cost is automatically calculated by using the command auto-cost reference bandwidth (IPv6 OSPF).

Mode Interface Configuration for a VLAN interface or Interface Configuration for a PPP interface.

Usage This command explicitly sets a user specified cost of sending packets out the interface. Using this command overrides the cost value calculated automatically with the auto-cost reference bandwidth (IPv6 OSPF) feature.

The link-state metric cost is stated in the Router-LSA's link. Typically, the cost is inversely proportional to the bandwidth of an interface. By default, the cost of a VLAN interface is calculated according to the following formula:

reference bandwidth / interface bandwidth

The reference bandwidth is set by default at 1000000 kbps (or 1000 Mbps), but can be changed by the command auto-cost reference bandwidth (IPv6 OSPF).

The interface bandwidth is set by default to 1000000 kbps (or 1000 Mbps), but can be changed by the bandwidth command.

Example To set the IPv6 OSPF cost to 10 on the VLAN interface `vlan25`, use the following commands:

```
awplus# configure terminal
awplus(config)# interface vlan25
awplus(config-if)# ipv6 ospf cost 10
```

To set the IPv6 OSPF cost to 10 on the PPP interface `ppp0`, use the following commands:

```
awplus# configure terminal
awplus(config)# interface ppp0
awplus(config-if)# ipv6 ospf cost 10
```

Related Commands

show ipv6 ospf interface

auto-cost reference bandwidth (IPv6 OSPF)

bandwidth

ipv6 ospf dead-interval

Overview This command sets the interval during which no hello packets are received and after which a neighbor is declared dead.

The dead-interval is the amount of time that OSPF waits to receive an OSPF hello packet from the neighbor before declaring the neighbor is down. This value is advertised in the router's hello packets. It must be a multiple of the hello-interval and be the same for all routers on a specific network.

The **no** variant of this command returns the interval to the default of 40 seconds.

Syntax

```
ipv6 ospf dead-interval <1-65535> [<inst-id>]
no ipv6 ospf  dead-interval
```

Parameter	Description
<1-65535>	The interval in seconds. Default: `40`
<inst-id>	The instance ID Default: `0`

Mode Interface Configuration for a VLAN interface or Interface Configuration for a PPP interface.

Example The following example shows configuring the dead-interval to 10 seconds on the VLAN interface `vlan2`:

```
awplus# configure terminal
awplus(config)# interface vlan2
awplus(config-if)# ipv6 ospf dead-interval 10
```

The following example shows configuring the dead-interval to 10 seconds on the PPP interface `ppp0`:

```
awplus# configure terminal
awplus(config)# interface ppp0
awplus(config-if)# ipv6 ospf dead-interval 10
```

Related Commands

ipv6 ospf hello-interval

show ipv6 ospf interface

ipv6 ospf display route single-line

Overview Use this command to change the result of the **show ipv6 route** command to display each route entry on a single line.

Syntax

```
ipv6 ospf display route single-line
no ipv6 ospf display route single-line
```

Mode Global Configuration

Example To display each route entry on a single line.

```
awplus# configure terminal
awplus(config)# ipv6 ospf display route single-line
```

Related Commands show ipv6 ospf route

ipv6 ospf encryption spi esp

Overview Use this command in Interface Configuration mode to enable either AES-CBC (Advanced Encryption Standard-Cipher Block Chaining) or 3DES (Triple Data Encryption Standard) ESP (Encapsulating Security Payload) encryption for a specified interface.

Use the **no** variant of this command in Interface Configuration mode to disable the encryption configured for a specified interface.

Syntax

```
ipv6 ospf encryption ipsec spi <256-4294967295> esp {aes-cbc
<AES-CBC-key>|3des <3DES-key>|null}{md5 <MD5-key>|sha1
<SHA1-key>}
```

```
ipv6 ospf encryption null
```

```
no ipv6 ospf encryption ipsec spi <256-4294967295>
```

Parameter	Description
<256-4294967295>	Specify an SPI (Security Parameters Index) value in the range 256 to 4294967295, entered as a decimal integer.
`esp`	Specify the esp keyword (Encapsulating Security Payload) to then apply either AES-CBC or 3DES encryption.
`aes-cbc`	Specify this keyword to enable AES-CBC (Advanced Encryption Standard-Cipher Block Chaining) encryption.
<AES-CBC-key>	Enter an AES-CBC key containing either 32, 48, or 64 hexadecimal characters.
`3des`	Specify 3DES (Triple Data Encryption Standard) encryption.
<3DES-key>	Enter a 3DES key containing 48 hexadecimal characters.
`null`	Specify ESP without AES-CBC or 3DES encryption applied.
`md5`	Specify the MD5 (Message-Digest 5) encryption algorithm.
<MD5-key>	Enter an MD5 key containing 32 hexadecimal characters.
`sha1`	Specify the SHA-1 (Secure Hash Algorithm 1) encryption algorithm.
<SHA1-key>	Enter an SHA-1 key containing 40 hexadecimal characters.
`null`	Specify no encryption is applied when no other parameters are applied after this keyword (`ipv6 ospf encryption null`).

Default Authentication is not configured on an interface by default.

Mode Interface Configuration

Usage When you issue this command, authentication and encryption are both enabled. Configure the same SPI (Security Parameters Index) value on all interfaces that connect to the same link. SPI values are used by link interfaces. Use a different SPI value for a different link interface when using OSPFv3 with link interfaces.

Security is achieved using the IPv6 ESP extension header. The IPv6 ESP extension header is used to provide confidentiality, integrity, authentication, and confidentiality. Authentication fields are removed from OSPF for IPv6 packet headers, so applying IPv6 ESP extension headers are required for integrity, authentication, and confidentiality.

Use the **null** keyword to override existing area encryption. Apply the **null** keyword if area encryption is already configured to then configure encryption on an interface instead.

Use the **sha1** keyword to choose SHA-1 authentication instead of entering the **md5** keyword to use MD5 authentication. The SHA-1 algorithm is more secure than the MD5 algorithm. SHA-1 uses a 40 hexadecimal character key instead of a 32 hexadecimal character key as used for MD5 authentication.

See the OSPFv3 Feature Overview and Configuration Guide for more information and examples.

NOTE: *You can configure an encryption security policy (SPI) on a VLAN interface with this command, or an OSPFv3 area with the area encryption ipsec spi esp command.*

When you configure encryption for an area, the security policy is applied to all VLAN interfaces in the area. Allied Telesis recommends a different encryption security policy is applied for each interface for higher security.

*If you apply the **ipv6 ospf encryption null** command this affects encryption configured on both the VLAN interface and the OSPFv3 area.*

This is due to OSPFv3 hello messages ingressing VLAN interfaces, which are part of area encryption, not being encrypted. So neighbors time out.

Example To enable ESP encryption, but not apply an AES-CBC key or a 3DES key, for interface VLAN 2 and MD5 authentication with a 32 hexadecimal character key, use the commands:

```
awplus# configure terminal
awplus(config)# interface vlan2
awplus(config-if)# ipv6 ospf encryption ipsec spi 1000 esp null
md5 1234567890ABCDEF1234567890ABCDEF
```

To enable ESP encryption, but not apply an AES-CBC key or a 3DES key, for interface VLAN 2 and SHA-1 authentication with a 40 hexadecimal character key, use the commands:

```
awplus# configure terminal
awplus(config)# interface vlan2
awplus(config-if)# ipv6 ospf encryption ipsec spi 1000 esp null
sha1 1234567890ABCDEF1234567890ABCDEF12345678
```

To enable ESP encryption with an 3DES key with a 48 hexadecimal character key and MD5 authentication with a 32 hexadecimal character key for interface VLAN 2, use the commands:

```
awplus# configure terminal
awplus(config)# interface vlan2
awplus(config-if)# ipv6 ospf encryption ipsec spi 1000 esp 3des
1234567890ABCDEF1234567890ABCDEF1234567890ABCDEF md5
1234567890ABCDEF1234567890ABCDEF
```

To enable ESP encryption with an AES-CBC key with a 32 hexadecimal character key and SHA-1 authentication with a 40 hexadecimal character key for interface VLAN 2, use the commands:

```
awplus# configure terminal
awplus(config)# interface vlan2
awplus(config-if)# ipv6 ospf encryption ipsec spi 1000 esp
aes-cbc 1234567890ABCDEF1234567890ABCDEF sha1
1234567890ABCDEF1234567890ABCDEF12345678
```

To specify no ESP encryption is applied to interface VLAN 2, use the commands:

```
awplus# configure terminal
awplus(config)# interface vlan2
awplus(config-if)# ipv6 ospf encryption null
```

To disable ESP encryption for interface VLAN 2, use the commands:

```
awplus# configure terminal
awplus(config)# interface vlan2
awplus(config-if)# no ipv6 ospf encryption ipsec spi 1000
```

Related Commands

area authentication ipsec spi

area encryption ipsec spi esp

ipv6 ospf authentication spi

show ipv6 ospf interface

ipv6 ospf hello-interval

Overview This command specifies the interval between hello packets.

The hello-interval is advertised in the hello packets. Configure the same hello-interval for all routers on a specific network. A shorter interval ensures faster detection of topological changes, but results in more routing traffic.

The **no** variant of this command returns the interval to the default of 10 seconds.

Syntax

```
ipv6 ospf hello-interval <1-65535>
no ipv6 ospf hello-interval
```

Parameter	Description
<1-65535>	The hello-interval in seconds. Default: `10`

Default The default interval is 10 seconds.

Mode Interface Configuration for a VLAN interface or Interface Configuration for a PPP interface.

Example The following example shows setting the `hello-interval` to 3 seconds on the VLAN interface `vlan2`:

```
awplus# configure terminal
awplus(config)# interface vlan2
awplus(config-if)# ipv6 ospf hello-interval 3
```

The following example shows setting the `hello-interval` to 3 seconds on the PPP interface `ppp0`:

```
awplus# configure terminal
awplus(config)# interface ppp0
awplus(config-if)# ipv6 ospf hello-interval 3
```

Related Commands

ipv6 ospf dead-interval

show ipv6 ospf interface

ipv6 ospf neighbor

Overview Use this command to configure static OSPFv3 IPv6 neighbors when using the OSPFv3 "non-broadcast" (NBMA) and "point-to-multipoint non-broadcast" (P2MP NBMA) network types. OSPFv3 messages exchanged between the neighbors are unicast only.

Use the **no** variant of this command to remove a configuration.

Syntax

```
ipv6 ospf neighbor <ipv6-address>
[<cost>|<instance-id>|<poll-interval>|<priority>]

no ipv6 ospf neighbor <ipv6-address>
[<cost>|<instacne-id>|<poll-interval>|<priority>]
```

Parameter	Description
<ipv6-address>	Specifies the interface IPv6 address of the neighbor.
<cost>	*cost <1-65535>* OSPF cost for point-to-multipoint neighbor.
<instance-id>	*instance-id <0-255>* Interface instance ID.
<poll-interval>	*poll-interval <0-4294967295>* Dead neighbor polling interval in seconds. It is recommended to set this value much higher than the hello interval. The default is 120 seconds.
<priority>	*priority <0-255>* Specifies the router priority value of the non-broadcast neighbor associated with the specified IP address. The default is 0. This keyword does not apply to point-to-multipoint interfaces.

Mode Interface Configuration

Usage To configure a neighbor on an NBMA network manually, use the **ipv6 ospf neighbor** command and include one neighbor entry for each known non-broadcast network neighbor. The IPv6 address used in this command is the neighbor's primary IPv6 address on the interface where that neighbor connects to the NBMA network.

The poll interval is the reduced rate at which routers continue to send hello packets, when a neighboring router has become inactive. Set the poll interval to be much larger than hello interval.

You can use this command to configure static OSPFv3 IPv6 neighbors for Layer 3 interfaces, such as Ethernet or tunnel interfaces on routers or a VLAN interface on switches or routers.

Examples This example shows a neighbor configured with a priority value, poll interval time, and cost.

```
awplus# configure terminal
awplus(config)# interface eth1
awplus(config-if)# ipv6 ospf neighbor fe80::c:20:0:1 priority 1
poll-interval 90
awplus(config-router)# ipv6 ospf neighbor fe80::c:20:0:1 cost
15
```

Related Commands show ipv6 ospf neighbor

ipv6 ospf network

Overview This command configures the OSPF network type to a type different from the default for the particular VLAN interface.

The **no** variant of this command returns the network type to the default for the particular VLAN interface.

Syntax

```
ipv6 ospf network [broadcast | non-broadcast | point-to-point |
point-to-multipoint]
```

```
no ipv6 ospf network
```

Parameter	Description
`broadcast`	Sets the network type to broadcast.
`non-broadcast`	Sets the network type to NBMA.
`point-to-multipoint`	Sets the network type to point-to-multipoint.
`point-to-point`	Sets the network type to point-to-point.

Default The default is the `broadcast` OSPF network type for a VLAN interface.

Mode Interface Configuration for a VLAN interface or Interface Configuration for a PPP interface.

Usage This command forces the interface network type to the specified type. Depending on the network type, OSPF changes the behavior of the packet transmission and the link description in LSAs.

Example The following example shows setting the network type to `point-to-point` on the VLAN interface `vlan1`:

```
awplus# configure terminal
awplus(config)# interface vlan1
awplus(config-if)# ipv6 ospf network point-to-point
```

The following example shows setting the network type to `point-to-point` on the PPP interface `ppp0`:

```
awplus# configure terminal
awplus(config)# interface ppp0
awplus(config-if)# ipv6 ospf network point-to-point
```

ipv6 ospf priority

Overview This command sets the router priority, which is a parameter used in the election of the designated router for the link.

The **no** variant of this command returns the router priority to the default of 1.

Syntax

```
ipv6 ospf priority <priority>
no ipv6 ospf priority
```

Parameter	Description
<priority>	*<0-255>* Specifies the router priority of the interface. The larger the value, the greater the priority level. The value 0 defines that the device cannot become either the DR, or backup DR for the link.

Default The default priority is 1.

Mode Interface Configuration for a VLAN interface or Interface Configuration for a PPP interface.

Usage Set the priority to help determine the OSPF Designated Router (DR) for a link. If two routers attempt to become the DR, the router with the higher router priority becomes the DR. If the router priority is the same for two routers, the router with the higher router ID takes precedence.

Routers with zero router priority values cannot become the designated or backup designated router.

Example The following example shows setting the OSPFv3 priority value to 3 on the VLAN interface `vlan2`:

```
awplus# configure terminal
awplus(config)# interface vlan2
awplus(config-if)# ipv6 ospf priority 3
```

The following example shows setting the OSPFv3 priority value to 3 on the PPP interface `ppp0`:

```
awplus# configure terminal
awplus(config)# interface ppp0
awplus(config-if)# ipv6 ospf priority 3
```

ipv6 ospf retransmit-interval

Overview Use this command to specify the time between link-state advertisement (LSA) retransmissions for adjacencies belonging to the interface.

Use the **no** variant of this command to return to the default of 5 seconds.

Syntax

```
ipv6 ospf retransmit-interval <1-65535>
no ipv6 ospf retransmit-interval
```

Parameter	Description
<1-65535>	Specifies the interval in seconds.

Default The default interval is 5 seconds.

Mode Interface Configuration for a VLAN interface or Interface Configuration for a PPP interface.

Usage After sending an LSA to a neighbor, the router keeps the LSA until it receives an acknowledgment. In case the router does not receive an acknowledgment during the set time (the retransmit interval value) it retransmits the LSA. Set the retransmission interval value conservatively to avoid needless retransmission. The interval should be greater than the expected round-trip delay between two routers.

Example The following example shows setting the `ospf retransmit interval` to 6 seconds on the VLAN interface `vlan2`:

```
awplus# configure terminal
awplus(config)# interface vlan2
awplus(config-if)# ipv6 ospf retransmit-interval 6
```

The following example shows setting the `ospf retransmit interval` to 6 seconds on the PPP interface `ppp0`:

```
awplus# configure terminal
awplus(config)# interface ppp0
awplus(config-if)# ipv6 ospf retransmit-interval 6
```

ipv6 ospf transmit-delay

Overview Use this command to set the estimated time it takes to transmit a link-state-update packet on the VLAN interface.

Use the **no** variant of this command to return to the default of 1 second.

Syntax

```
ipv6 ospf transmit-delay <1-65535>
no ipv6 ospf transmit-delay
```

Parameter	Description
<1-65535>	Specifies the time, in seconds, to transmit a link-state update.

Default The default interval is 1 second.

Mode Interface Configuration for a VLAN interface or Interface Configuration for a PPP interface.

Usage The transmit delay value adds a specified time to the age field of an update. If the delay is not added, the time in which the LSA transmits over the link is not considered. This command is especially useful for low speed links. Add transmission and propagation delays when setting the transmit delay value.

Example To set the IPv6 OSPF transmit delay time to 3 seconds on the VLAN interface `vlan2`, use the following commands:

```
awplus# configure terminal
awplus(config)# interface vlan2
awplus(config-if)# ipv6 ospf transmit-delay 3
```

To set the IPv6 OSPF transmit delay time to 3 seconds on the PPP interface `ppp0`, use the following commands:

```
awplus# configure terminal
awplus(config)# interface ppp0
awplus(config-if)# ipv6 ospf transmit-delay 3
```

ipv6 router ospf area

Overview Use this command to enable IPv6 OSPF routing on an interface.

Use the **no** variant of this command to disable IPv6 OSPF routing on an interface.

Syntax

```
ipv6 router ospf area <area-id> [tag <process-id>] [instance <inst-id>]
no ipv6 router ospf area <area-id>
```

Parameter	Description
<area-id>	The ID of the IPv6 OSPF routing area. Can be entered as either an IPv4 A.B.C.D address format, or as an unsigned integer in the range, 0 to 4294967295. Use either of the following forms when entering an area-ID: • `area-id` *<A.B.C.D>* where A.B.C.D is a number entered in IPv4 address format. • `area-id` <0 to 4294967295>.
<process-id>	The process tag denotes a separate router process. It can comprise any string of alphanumeric characters. Note that this tag is local to the router on which it is set and does not appear in any OSPF packets or LSA.
<instance-id>	The OSPF instance ID, entered as an integer between 0 and 255. This is the value that will appear in the instance field of the IPv6 OSPF hello packet.

Defaults IPv6 OSPF routing is disabled by default.

When enabling IPv6 OSPF routing:

- the process-tag will default to a null value if not set.
- the Instance ID defaults to 0 if not set.

Mode Interface Configuration for a VLAN interface or Interface Configuration for a PPP interface.

Usage When enabling IPv6 OSPF routing on an interface, specifying the area-ID is mandatory, but the Process tag and Instance are optional.

See the OSPFv3 Feature Overview and Configuration Guide for more information and examples.

Examples The following commands enable IPv6 OSPF on VLAN interface `vlan2`, OSPF area 1, tag PT2, and instance 2:

```
awplus# configure terminal
awplus(config)# interface vlan2
awplus(config-if)# ipv6 router ospf area 1 tag PT2 instance-id 2
```

The following commands disable IPv6 OSPF on VLAN interface `vlan2` and OSPF area 1:

```
awplus# configure terminal
awplus(config)# interface vlan2
awplus(config-if)# no ipv6 router ospf area 1
```

The following commands enable IPv6 OSPF on PPP interface `ppp0`, OSPF area 1, tag PT2, and instance 2:

```
awplus# configure terminal
awplus(config)# interface ppp0
awplus(config-if)# ipv6 router ospf area 1 tag PT2 instance-id 2
```

The following commands disable IPv6 OSPF on PPP interface `ppp0` and OSPF area 1:

```
awplus# configure terminal
awplus(config)# interface ppp0
awplus(config-if)# no ipv6 router ospf area 1
```

max-concurrent-dd (IPv6 OSPF)

Overview Use this command to limit the number of neighbors that can be concurrently processed in the database exchange. The specified value limits the number of neighbors from all interfaces, not per interface.

Use the **no** variant of this command to have no limit on the maximum number of LSAs.

Syntax

```
max-concurrent-dd <max-neighbors>
no max-concurrent-dd
```

Parameter	Description
<max-neighbors>	<1-65535> The maximum number of neighbors.

Mode Router Configuration

Usage This command is useful where bringing up several adjacencies on a router is affecting performance. In this situation, you can often enhance the system performance by limiting the number of neighbors that can be processed concurrently.

Example The following example sets the max-concurrent-dd value to allow only 4 neighbors to be processed at a time.

```
awplus# configure terminal
awplus(config)# router ipv6 ospf
awplus(config-router)# max-concurrent-dd 4
```

Related Commands router ipv6 ospf

passive-interface (IPv6 OSPF)

Overview Use this command to suppress the sending of Hello packets on a specified interface. If you use the **passive-interface** command without the optional parameters then **all** interfaces are put into passive mode.

Use the **no** variant of this command to allow the sending of Hello packets on all interfaces, or on the specified interface. If you use the **no** variant of this command without the optional parameters then **all** interfaces are removed from passive mode.

Syntax

```
passive-interface [<interface>]
no passive-interface [<interface>]
```

Parameter	Description
<interface>	The name or the VID of the VLAN interface.

Mode Router Configuration

Usage Configure an interface to be passive if you wish its connected route to be treated as an OSPF route (rather than an AS-external route), but do not wish to actually exchange any OSPF packets via this interface.

Examples To configure passive interface mode on interface vlan2, enter the following commands:

```
awplus(config)# router ipv6 ospf
awplus(config-router)# passive-interface vlan2
```

To configure passive interface mode on **all** interfaces, enter the following commands:

```
awplus(config)# router ipv6 ospf
awplus(config-router)# passive-interface
```

To remove passive interface mode on interface vlan2, enter the following commands:

```
awplus(config)# router ipv6 ospf
awplus(config-router)# no passive-interface vlan2
```

To remove passive interface mode on **all** interfaces, enter the following commands:

```
awplus(config)# router ipv6 ospf
awplus(config-router)# no passive-interface
```

redistribute (IPv6 OSPF)

Overview Use this command to redistribute routes from other routing protocols, static routes and connected routes into an IPv6 OSPF routing table.

Use the **no** variant of this command to disable this function.

Syntax

```
redistribute <protocol>} [metric <0-16777214>] [metric-type
{1|2}] [route-map <route-map-entry>]
```

```
no redistribute <protocol>
```

Parameter	Description	
<protocol>	The routing protocol to be redistributed, can be one of:	
	`connected`	Connected routes
	`rip`	Routing Internet Protocol
	`static`	Static Routes
`metric`	Specifies the external metric.	
`metric-type`	Specifies the external metric-type, either type 1 or type 2. • **For Metric Type 1:** The best route is based on the external redistributed path cost plus the internal path cost presented by the native routing protocol. • **For Metric Type 2:** The best route is based only on the external redistributed path cost. The internal path cost is only used to break a "tie" situation between two identical external path costs.	
`route-map`	The name of the specific route-map.	

Default The default metric value for routes redistributed into OSPFv3 is 20. The metric can also be defined using the set metric command for a route map. Note that a metric defined using the set metric command for a route map overrides a metric defined with this command.

Mode Router Configuration

Usage You use this command to inject routes, learned from other routing protocols, into the OSPF domain to generate AS-external-LSAs. If a route-map is configured by this command, then that route-map is used to control which routes are redistributed and can set metric and tag values on particular routes.

The metric, metric-type, and tag values specified on this command are applied to any redistributed routes that are not explicitly given a different metric, metric-type, or tag value by the route map.

See the OSPF Feature Overview and Configuration Guide for more information about metrics, and about behavior when configured in route maps.

Note that this command does not redistribute the default route. To redistribute the default route, use the default-information originate command.

Example The following example shows the redistribution of RIP routes into the IPv6 OSPF routing table, with a metric of 10 and a metric type of 1.

```
awplus# configure terminal
awplus(config)# router ipv6 ospf
awplus(config-router)# redistribute rip metric 10 metric-type 1
```

restart ipv6 ospf graceful

Overview Use this command to force the OSPFv3 process to restart. You may optionally specify a grace-period value. If a grace-period is not specified then a default value of 120 seconds is applied.

You should specify a grace-period value of 120 seconds or more. Low grace-period values may cause the graceful restart process on neighboring routers to terminate with routes missing.

Syntax

```
restart ipv6 ospf graceful [grace-period <1-1800>]
```

Parameter	Description
`grace-period`	Specify the grace period.
<1-1800>	The grace period in seconds.

Default The default OSPF grace-period is 120 seconds.

Mode Privileged Exec

Usage After this command is executed, the OSPFv3 process immediately shuts down. It notifies the system that OSPF has performed a graceful shutdown. Routes installed by OSPF are preserved until the grace-period expires.

When a **restart ospf graceful** command is issued, the OSPF configuration is reloaded from the last saved configuration. Ensure you first enter the copy running-config startup- config command.

Example To restart OSPFv3, use the following commands:

```
awplus# copy running-config startup-config
awplus# restart ipv6 ospf graceful grace-period 200
```

To apply the default grace-period (120 seconds), use the following commands:

```
awplus# copy running-config startup-config
awplus# restart ipv6 ospf graceful
```

router ipv6 ospf

Overview Use this command to create or remove an IPv6 OSPF routing process, or to enter the Router Configuration mode to configure a specific IPv6 OSPF routing process. Use the **no** variant of this command to terminate an IPv6 OSPF routing process.

Use the **no** parameter with the **process-id** parameter, to terminate and delete a specific IPv6 OSPF routing process.

Syntax

```
router ipv6 ospf [<process-id>]
no router ipv6 ospf [<process-id>]
```

Parameter	Description
<process-id>	A character string that identifies a routing process. If you do not specify the process-id a "null" process ID will be applied. Note that this will appear in show output as *null* However you cannot select the null process by using the character string *null* as command entry characters.

Default No routing process is defined by default.

Mode Global Configuration

Usage The process ID enables you to run more than one OSPF session within the same router, then configure each session to a different router port. Note that this function is internal to the router, and other routers (neighbors) have no knowledge of these different processes. The hello and LSAs issued from each process will appear as if coming from a separate physical router.

To a large extent the requirement for multiple processes has been replaced by the ability within IPv6 OSPF of running simultaneous router instances.

The process ID of IPv6 OSPF is an optional parameter for the **no** variant of this command only. When removing all IPv6 OSPF processes on the device, you do not need to specify each Process ID, but when removing particular IPv6 OSPF processes, you must specify each Process ID to be removed.

For a description of processes and instances and their configuration relationships, see the OSPFv3 Feature Overview and Configuration Guide.

Example This example shows the use of this command to enter Router Configuration mode.

```
awplus# configure terminal
awplus(config)# router ipv6 ospf P100
awplus(config-router)#
```

router-id (IPv6 OSPF)

Overview Use this command to specify a router ID for the IPv6 OSPF process.

Use the **no** variant of this command to disable this function.

Syntax

```
router-id <router-id>
no router-id
```

Parameter	Description
<router-id>	Specifies the router ID in IPv4 address format.

Mode Router Configuration

Usage Configure each router with a unique router-id. In an IPv6 OSPF router process that has active neighbors, a new router-id takes effect at the next reload or when you restart OSPF manually.

Example The following example shows a specified router ID 0.0.4.5.

```
awplus# configure terminal
awplus(config)# router ipv6 ospf
awplus(config-router)# router-id 0.0.4.5
```

Related Commands show ipv6 ospf

show debugging ipv6 ospf

Overview Use this command in User Exec or Privileged Exec modes to display which OSPFv3 debugging options are currently enabled.

For information on filtering and saving command output, see the "Getting Started with AlliedWare Plus" Feature Overview and Configuration Guide.

Syntax

```
show debugging ipv6 ospf
```

Mode User Exec and Privileged Exec

Example

```
awplus# show debugging ipv6 ospf
```

Output Figure 28-1: Example output from the **show debugging ipv6 ospf** command

```
OSPFv3 debugging status:
  OSPFv3 all packet detail debugging is on
  OSPFv3 all IFSM debugging is on
  OSPFv3 all NFSM debugging is on
  OSPFv3 all LSA debugging is on
  OSPFv3 all NSM debugging is on
  OSPFv3 all route calculation debugging is on
  OSPFv3 all event debugging is on
```

show ipv6 ospf

Overview Use this command in User Exec or Privileged Exec modes to display general information about all IPv6 OSPF routing processes, including OSPFv3 Authentication configuration and status information.

Include the process ID parameter with this command to display information about specified processes.

For information on filtering and saving command output, see the "Getting Started with AlliedWare Plus" Feature Overview and Configuration Guide.

Syntax

```
show ipv6 ospf
show ipv6 ospf <process-id>
```

Parameter	Description
<process-id>	*<0-65535>* The ID of the router process for which information will be displayed. If this parameter is included, only the information for the specified routing process is displayed.

Mode User Exec and Privileged Exec

Examples To display general information about all IPv6 OSPF routing processes, use the command:

```
awplus# show ipv6 ospf
```

To display general information about IPv6 OSPF (OSPFv3) routing process `P10`, use the command:

```
awplus# show ipv6 ospf P10
```

Output Figure 28-2: Example output from the **show ipv6 ospf** command for process P10, showing OSPFv3 Authentication configuration information highlighted in bold

```
 awplus#show ipv6 ospf
  Routing Process "OSPFv3 (10)" with ID 192.168.1.2
  Route Licence: Route : Limit=Unlimited, Allocated=0, Visible=0,
Internal=0
  Route Licence: Breach: Current=0, Watermark=0
  Process uptime is 6 minutes
  Current grace period is 120 secs (default)
  SPF schedule delay min 0.500 secs, SPF schedule delay max 50.0
secs
  Minimum LSA interval 5 secs, Minimum LSA arrival 1 secs
  Number of incoming current DD exchange neighbors 0/5
  Number of outgoing current DD exchange neighbors 0/5
  Number of external LSA 0. Checksum Sum 0x0000
  Number of AS-Scoped Unknown LSA 0
  Number of LSA originated 4
  Number of LSA received 10
  Number of areas in this router is 1
     Area BACKBONE(0)
         Number of interfaces in this area is 1(1)
         MD5 Authentication SPI 1000
         NULL Encryption SHA-1 Auth, SPI 1001
         SPF algorithm executed 9 times
         Number of LSA 3.  Checksum Sum 0xF9CC
         Number of Unknown LSA 0
```

Related Commands

area authentication ipsec spi

area encryption ipsec spi esp

router ipv6 ospf

show ipv6 ospf database

Overview Use this command in User Exec or Privileged Exec modes to display a database summary for IPv6 OSPF information. Include the process ID parameter with this command to display information about specified processes.

For information on filtering and saving command output, see the "Getting Started with AlliedWare Plus" Feature Overview and Configuration Guide.

Syntax

```
show ipv6 ospf <process-id> database
[self-originate|max-age|adv router <adv-router-id>]
```

Parameter	Description
<process-id>	*<0-65535>* The ID of the router process for which information will be displayed.
`self-originate`	Displays self-originated link states.
`max-age`	Displays LSAs in MaxAge list. It maintains the list of the all LSAs in the database which have reached the max-age which is 3600 seconds.
`adv-router`	Advertising Router LSA.
<adv-router- id>	The Advertising Router ID (usually entered in IPv4 address format A.B.C.D). Note that this ID component no longer represents an address; it is simply a character string that has an IPv4 address format.

Mode User Exec and Privileged Exec

Example To display the database summary for IPv6 OSPF information on process `P10`, use the command:

```
awplus# show ipv6 ospf P10 database
```

Output Figure 28-3: Example output from the **show ipv6 ospf P10 database** command

```
OSPFv3 Router with ID (0.0.1.1) (Process P10)

                Link-LSA (Interface vlan2)

Link State ID   ADV Router      Age  Seq#       CkSum  Prefix
0.0.0.202       0.0.1.1           46 0x800000c3 0x5f50      1
0.0.0.202       0.0.1.2            8 0x800000c3 0x4ca0      1

                Link-LSA (Interface vlan3)

Link State ID   ADV Router      Age  Seq#       CkSum  Prefix
0.0.0.203       0.0.1.1         1071 0x8000000e 0xe082      1
0.0.0.203       0.0.1.3         1057 0x8000000e 0xb8aa      1

                Router-LSA (Area 0.0.0.0)

Link State ID   ADV Router      Age  Seq#       CkSum    Link
0.0.0.0         0.0.1.1         1016 0x800000cd 0xa426      2
0.0.0.0         0.0.1.2          979 0x800000d8 0xad2b      1
0.0.0.0         0.0.1.3         1005 0x800000cf 0xefed      1

                Network-LSA (Area 0.0.0.0)

Link State ID   ADV Router      Age  Seq#       CkSum
0.0.0.202       0.0.1.2         1764 0x800000c2 0x94c3
0.0.0.203       0.0.1.3         1010 0x800000c4 0x8ac8

                Intra-Area-Prefix-LSA (Area 0.0.0.0)

Link State ID   ADV Router      Age  Seq#       CkSum  Prefix  Reference
0.0.0.2         0.0.1.2          978 0x800000a1 0x699a      1  Router-LSA
0.0.0.4         0.0.1.2         1764 0x800000c2 0xca4d      1  Network-LSA
0.0.0.1         0.0.1.3         1004 0x80000012 0xaee2      1  Router-LSA
0.0.0.7         0.0.1.3         1005 0x8000000e 0x3c89      1  Network-LSA

                AS-external-LSA

Link State ID   ADV Router      Age  Seq#       CkSum
0.0.0.13        0.0.1.1         1071 0x8000000e 0xca9f E2
0.0.0.14        0.0.1.1         1071 0x8000000e 0xcc9b E2
0.0.0.15        0.0.1.1         1071 0x8000000e 0xce97 E2
0.0.0.16        0.0.1.1         1071 0x8000000e 0xd093 E2
0.0.0.17        0.0.1.1         1071 0x8000000e 0xd28f E2
0.0.0.18        0.0.1.1         1071 0x8000000e 0xd48b E2
```

show ipv6 ospf database external

Overview Use this command in User Exec or Privileged Exec modes to display information about the external LSAs.

For information on filtering and saving command output, see the "Getting Started with AlliedWare Plus" Feature Overview and Configuration Guide.

Syntax

```
show ipv6 ospf database external <adv-router-id>
[self-originate|adv-router <adv-router-id>]
```

Parameter	Description
<adv-router-id>	The Advertising Router ID (usually entered in IPv4 address format A.B.C.D). Note that this ID component no longer represents an address; it is simply a character string that has an IPv4 address format.
`self-originate`	Self-originated link states.
`adv-router`	Displays all the LSAs of the specified router.

Mode User Exec and Privileged Exec

Examples To display information about the external LSAs, use the following command:

```
awplus# show ipv6 ospf database external adv-router 10.10.10.1
```

Output Figure 28-4: Example output from the **show ipv6 ospf database external** command

```
LS age: 1087
  LS Type: AS-External-LSA
  Link State ID: 0.0.0.13
  Advertising Router: 0.0.1.1
  LS Seq Number: 0x8000000C
  Checksum: 0xCE9D
  Length: 52
    Metric Type: 2 (Larger than any link state path)
    Metric: 20
    Prefix: 2010:2222::/64
    Prefix Options: 0 (-|-|-|-)
    Forwarding Address: 2003:1111::1
...
```

show ipv6 ospf database grace

Overview Use this command in User Exec or Privileged Exec modes to display information about the grace LSAs.

For information on filtering and saving command output, see the "Getting Started with AlliedWare Plus" Feature Overview and Configuration Guide.

Syntax

```
show ipv6 ospf database grace <adv-router-id>
[self-originate|adv-router <adv-router-id>]
```

Parameter	Description
<adv-router-id>	The Advertising Router ID (usually entered in IPv4 address format A.B.C.D). Note that this ID component no longer represents an address; it is simply a character string that has an IPv4 address format.
adv-router	Displays all the LSAs of the specified router.
self-originate	Self-originated link states.

Mode User Exec and Privileged Exec

Examples To display information about the grace LSAs, use the following command:

```
awplus# show ipv6 ospf database grace adv-router 10.10.10.1
```

Output Figure 28-5: Example output from the **show ipv6 ospf database grace** command

```
LS age: 1087
  LS Type: AS-External-LSA
  Link State ID: 0.0.0.13
  Advertising Router: 0.0.1.1
  LS Seq Number: 0x8000000C
  Checksum: 0xCE9D
  Length: 52
    Metric Type: 2 (Larger than any link state path)
    Metric: 20
    Prefix: 2010:2222::/64
    Prefix Options: 0 (-|-|-|-)
    Forwarding Address: 2003:1111::1
```

show ipv6 ospf database inter-prefix

Overview Use this command in User Exec or Privileged Exec modes to display information about the inter-prefix LSAs.

For information on filtering and saving command output, see the "Getting Started with AlliedWare Plus" Feature Overview and Configuration Guide.

Syntax

```
show ipv6 ospf database inter-prefix <adv-router-id>
[self-originate|adv-router <adv-router-id>]
```

Parameter	Description
<adv-router-id>	The Advertising Router ID (usually entered in IPv4 address format A.B.C.D). Note that this ID component no longer represents an address; it is simply a character string that has an IPv4 address format.
`adv-router`	Displays all the LSAs of the specified router.
`self-originate`	Self-originated link states.

Mode User Exec and Privileged Exec

Examples To display information about the inter-prefix LSAs, use the following command:

```
awplus# show ipv6 ospf database external adv-router 10.10.10.1
```

Output Figure 28-6: Example output from the **show ipv6 ospf database inter-prefix** command

```
LS age: 1087
  LS Type: AS-External-LSA
  Link State ID: 0.0.0.13
  Advertising Router: 0.0.1.1
  LS Seq Number: 0x8000000C
  Checksum: 0xCE9D
  Length: 52
    Metric Type: 2 (Larger than any link state path)
    Metric: 20
    Prefix: 2010:2222::/64
    Prefix Options: 0 (-|-|-|-)
    Forwarding Address: 2003:1111::1
...
```

show ipv6 ospf database inter-router

Overview Use this command in User Exec or Privileged Exec modes to display information about the inter-router LSAs.

For information on filtering and saving command output, see the "Getting Started with AlliedWare Plus" Feature Overview and Configuration Guide.

Syntax

```
show ipv6 ospf database inter-router <adv-router-id>
[self-originate| adv-router <adv-router-id>]
```

Parameter	Description
<adv-router-id>	The Advertising Router ID (usually entered in IPv4 address format A.B.C.D). Note that this ID component no longer represents an address; it is simply a character string that has an IPv4 address format.
adv-router	Displays all the LSAs of the specified router.
self-originate	Self-originated link states.

Mode User Exec and Privileged Exec

Examples To display information about the inter-router LSAs, use the following command:

```
awplus# show ipv6 ospf database inter-router adv-router
10.10.10.1
```

Output Figure 28-7: Example output from the **show ipv6 ospf database inter-router** command

```
LS age: 1087
  LS Type: AS-External-LSA
  Link State ID: 0.0.0.13
  Advertising Router: 0.0.1.1
  LS Seq Number: 0x8000000C
  Checksum: 0xCE9D
  Length: 52
    Metric Type: 2 (Larger than any link state path)
    Metric: 20
    Prefix: 2010:2222::/64
    Prefix Options: 0 (-|-|-|-)
    Forwarding Address: 2003:1111::1
...
```

show ipv6 ospf database intra-prefix

Overview Use this command in User Exec or Privileged Exec modes to display information about the intra-prefix LSAs.

For information on filtering and saving command output, see the "Getting Started with AlliedWare Plus" Feature Overview and Configuration Guide.

Syntax

```
show ipv6 ospf database intra-prefix <adv-router-id>
[self-originate|adv-router <adv-router-id>]
```

Parameter	Description
<adv-router-id>	The Advertising Router ID (usually entered in IPv4 address format A.B.C.D). Note that this ID component no longer represents an address; it is simply a character string that has an IPv4 address format.
adv-router	Displays all the LSAs of the specified router.
self-originate	Self-originated link states.

Mode User Exec and Privileged Exec

Examples To display information about the intra-prefix LSAs, use the following command:

```
awplus# show ipv6 ospf database intra-prefix adv-router
10.10.10.1
```

Output Figure 28-8: Example output from the **show ipv6 ospf database intra-prefix** command

```
LS age: 1087
  LS Type: AS-External-LSA
  Link State ID: 0.0.0.13
  Advertising Router: 0.0.1.1
  LS Seq Number: 0x8000000C
  Checksum: 0xCE9D
  Length: 52
    Metric Type: 2 (Larger than any link state path)
    Metric: 20
    Prefix: 2010:2222::/64
    Prefix Options: 0 (-|-|-|-)
    Forwarding Address: 2003:1111::1
...
```

show ipv6 ospf database link

Overview Use this command in User Exec or Privileged Exec modes to display information about the link LSAs.

For information on filtering and saving command output, see the "Getting Started with AlliedWare Plus" Feature Overview and Configuration Guide.

Syntax

```
show ipv6 ospf database link <adv-router-id>
[self-originate|adv-router <adv-router-id>]
```

Parameter	Description
<adv-router-id>	The Advertising Router ID (usually entered in IPv4 address format A.B.C.D). Note that this ID component no longer represents an address; it is simply a character string that has an IPv4 address format.
adv-router	Displays all the LSAs of the specified router.
self-originate	Self-originated link states.

Mode User Exec and Privileged Exec

Examples To display information about the link LSAs, use the following command:

```
awplus# show ipv6 ospf database link adv-router 10.10.10.1
```

Output Figure 28-9: Example output from the s**how ipv6 ospf database link** command

```
LS age: 1087
  LS Type: AS-External-LSA
  Link State ID: 0.0.0.13
  Advertising Router: 0.0.1.1
  LS Seq Number: 0x8000000C
  Checksum: 0xCE9D
  Length: 52
    Metric Type: 2 (Larger than any link state path)
    Metric: 20
    Prefix: 2010:2222::/64
    Prefix Options: 0 (-|-|-|-)
    Forwarding Address: 2003:1111::1
...
```

show ipv6 ospf database network

Overview Use this command in User Exec or Privileged Exec modes to display information about the network LSAs.

For information on filtering and saving command output, see the "Getting Started with AlliedWare Plus" Feature Overview and Configuration Guide.

Syntax

```
show ipv6 ospf database network <adv-router-id>
[self-originate|adv-router <adv-router-id>]
```

Parameter	Description
<adv-router-id>	The router ID of the advertising router, in IPv4 address format. Note, however, that this no longer represents a real address.
`self-originate`	Self-originated link states.
`adv-router`	The advertising router selected.

Mode User Exec and Privileged Exec

Examples To display information about the OSPFv3 network LSAs, use the following command:

```
awplus# show ipv6 ospf database network
```

Output Figure 28-10: Example output from the **show ipv6 ospf database network** command

```
OSPFv3 Router with ID (0.0.1.1) (Process P10)

                Network-LSA (Area 0.0.0.0)

  LS age: 97
  LS Type: Network-LSA
  Link State ID: 0.0.0.202
  Advertising Router: 0.0.1.2
  LS Seq Number: 0x800000C3
  Checksum: 0x92C4
  Length: 32
  Options: 0x000013 (-|R|-|-|E|V6)
    Attached Router: 0.0.1.2
    Attached Router: 0.0.1.1
```

```
  LS age: 1144
  LS Type: Network-LSA
  Link State ID: 0.0.0.203
  Advertising Router: 0.0.1.3
  LS Seq Number: 0x800000C4
  Checksum: 0x8AC8
  Length: 32
  Options: 0x000013 (-|R|-|-|E|V6)
    Attached Router: 0.0.1.3
    Attached Router: 0.0.1.1
```

show ipv6 ospf database router

Overview Use this command in User Exec or Privileged Exec modes to display information only about the router LSAs.

For information on filtering and saving command output, see the "Getting Started with AlliedWare Plus" Feature Overview and Configuration Guide.

Syntax

```
show ipv6 ospf database router <adv-router-id>
[self-originate|adv-router <adv-router-id>]
```

Parameter	Description
<adv-router-id>	The router ID of the advertising router, in IPv4 address format. Note, however, that this no longer represents a real address.
`self-originate`	Self-originated link states.
`adv-router`	The advertising router selected.

Mode User Exec and Privileged Exec

Examples To display information about the OSPFv3 router LSAs, use the following command:

```
awplus# show ipv6 ospf database router
```

Output Figure 28-11: Example output from the **show ipv6 ospf database router** command

```
           OSPFv3 Router with ID (0.0.1.3) (Process P10)

                Router-LSA (Area 0.0.0.0)

LS age: 556
  LS Type: Router-LSA
  Link State ID: 0.0.0.0
  Advertising Router: 0.0.1.1
  LS Seq Number: 0x800000CA
  Checksum: 0xAA23
  Length: 56
  Flags: 0x02 (-|-|E|-)
  Options: 0x000013 (-|R|-|-|E|V6)
```

```
    Link connected to: a Transit Network
      Metric: 1
      Interface ID: 203
      Neighbor Interface ID: 203
      Neighbor Router ID: 0.0.1.3

    Link connected to: a Transit Network
      Metric: 1
      Interface ID: 202
      Neighbor Interface ID: 202
      Neighbor Router ID: 0.0.1.2

  LS age: 520
  LS Type: Router-LSA
  Link State ID: 0.0.0.0
  Advertising Router: 0.0.1.2
  LS Seq Number: 0x800000D5
  Checksum: 0xB328
  Length: 40
  Flags: 0x00 (-|-|-|-)
  Options: 0x000013 (-|R|-|-|E|V6)

    Link connected to: a Transit Network
      Metric: 1
      Interface ID: 202
      Neighbor Interface ID: 202
      Neighbor Router ID: 0.0.1.2

LS age: 543
  LS Type: Router-LSA
  Link State ID: 0.0.0.0
  Advertising Router: 0.0.1.3
  LS Seq Number: 0x800000CC
  Checksum: 0xF5EA
  Length: 40
  Flags: 0x00 (-|-|-|-)
  Options: 0x000013 (-|R|-|-|E|V6)

    Link connected to: a Transit Network
      Metric: 1
      Interface ID: 203
      Neighbor Interface ID: 203
      Neighbor Router ID: 0.0.1.3
            OSPFv3 Router with ID (0.0.1.3) (Process P10)

                AS-external-LSA
```

```
  LS age: 1384
  LS Type: AS-External-LSA
  Link State ID: 0.0.0.13
  Advertising Router: 0.0.1.1
  LS Seq Number: 0x80000009
  Checksum: 0xD49A
  Length: 52
    Metric Type: 2 (Larger than any link state path)
    Metric: 20
    Prefix: 2010:2222::/64
    Prefix Options: 0 (-|-|-|-)
    Forwarding Address: 2003:1111::1

LS age: 1384
  LS Type: AS-External-LSA
  Link State ID: 0.0.0.14
  Advertising Router: 0.0.1.1
  LS Seq Number: 0x80000009
  Checksum: 0xD696
  Length: 52
    Metric Type: 2 (Larger than any link state path)
    Metric: 20
    Prefix: 2011:2222::/64
    Prefix Options: 0 (-|-|-|-)
    Forwarding Address: 2003:1111::1

LS age: 1384
  LS Type: AS-External-LSA
  Link State ID: 0.0.0.15
  Advertising Router: 0.0.1.1
  LS Seq Number: 0x80000009
  Checksum: 0xD892
  Length: 52
    Metric Type: 2 (Larger than any link state path)
    Metric: 20
    Prefix: 2012:2222::/64
    Prefix Options: 0 (-|-|-|-)
    Forwarding Address: 2003:1111::1

LS age: 1087
  LS Type: AS-External-LSA
  Link State ID: 0.0.0.13
  Advertising Router: 0.0.1.1
  LS Seq Number: 0x8000000C
  Checksum: 0xCE9D
  Length: 52
    Metric Type: 2 (Larger than any link state path)
    Metric: 20
    Prefix: 2010:2222::/64
    Prefix Options: 0 (-|-|-|-)
    Forwarding Address: 2003:1111::1
```

```
LS age: 1087
  LS Type: AS-External-LSA
  Link State ID: 0.0.0.14
  Advertising Router: 0.0.1.1
  LS Seq Number: 0x8000000C
  Checksum: 0xD099
  Length: 52
    Metric Type: 2 (Larger than any link state path)
    Metric: 20
    Prefix: 2011:2222::/64
    Prefix Options: 0 (-|-|-|-)
    Forwarding Address: 2003:1111::1

LS age: 1087
  LS Type: AS-External-LSA
  Link State ID: 0.0.0.15
  Advertising Router: 0.0.1.1
  LS Seq Number: 0x8000000C
  Checksum: 0xD295
  Length: 52
    Metric Type: 2 (Larger than any link state path)
    Metric: 20
    Prefix: 2012:2222::/64
    Prefix Options: 0 (-|-|-|-)
    Forwarding Address: 2003:1111::1

LS age: 1087
  LS Type: AS-External-LSA
  Link State ID: 0.0.0.16
  Advertising Router: 0.0.1.1
  LS Seq Number: 0x8000000C
  Checksum: 0xD491
  Length: 52
    Metric Type: 2 (Larger than any link state path)
    Metric: 20
    Prefix: 2013:2222::/64
    Prefix Options: 0 (-|-|-|-)
    Forwarding Address: 2003:1111::1

LS age: 1087
  LS Type: AS-External-LSA
  Link State ID: 0.0.0.17
  Advertising Router: 0.0.1.1
  LS Seq Number: 0x8000000C
  Checksum: 0xD68D
  Length: 52
    Metric Type: 2 (Larger than any link state path)
    Metric: 20
    Prefix: 2014:2222::/64
    Prefix Options: 0 (-|-|-|-)
    Forwarding Address: 2003:1111::1
```

```
LS age: 1087
  LS Type: AS-External-LSA
  Link State ID: 0.0.0.18
  Advertising Router: 0.0.1.1
  LS Seq Number: 0x8000000C
  Checksum: 0xD889
  Length: 52
    Metric Type: 2 (Larger than any link state path)
    Metric: 20
    Prefix: 2015:2222::/64
    Prefix Options: 0 (-|-|-|-)
    Forwarding Address: 2003:1111::1
```

show ipv6 ospf interface

Overview Use this command in User Exec or Privileged Exec modes to display interface information for OSPF for all interfaces or a specified interface, including OSPFv3 Authentication status for all interfaces or for a specified interface.

For information on filtering and saving command output, see the "Getting Started with AlliedWare Plus" Feature Overview and Configuration Guide.

Syntax

```
show ipv6 ospf interface [<interface-name>]
```

Parameter	Description
<interface-name>	An alphanumeric string that is the interface name. Omit the optional interface to display OSPF

Mode User Exec and Privileged Exec

Examples

```
awplus# show ipv6 ospf interface vlan2
```

Output Figure 28-12: Example output from the **show ipv6 ospf interface** command showing OSPFv3 Authentication configuration information highlighted in bold

```
awplus#show ipv6 ospf interface
 vlan2 is up, line protocol is up
   Interface ID 302
   IPv6 Prefixes
     fe80::215:77ff:fead:f87e/64 (Link-Local Address)
   Security Policy
     MD5 Authentication SPI 1000
     NULL Encryption SHA-1 Auth, SPI 1001

   OSPFv3 Process (10), Area 0.0.0.0, Instance ID 0
     Router ID 192.168.1.2, Network Type BROADCAST, Cost: 1
     Transmit Delay is 1 sec, State Backup, Priority 1
     Interface state Backup
     Designated Router (ID) 192.168.1.1
       Interface Address fe80::21d:e5ff:fec9:cfbe
     Backup Designated Router (ID) 192.168.1.2
       Interface Address fe80::215:77ff:fead:f87e
     Timer interval configured, Hello 10, Dead 40, Wait 40,
Retransmit 5
       Hello due in 00:00:07
     Neighbor Count is 1, Adjacent neighbor count is 1
```

Figure 28-13: Example output from the **show ipv6 ospf interface** vlan3 command

```
awplus#show ipv6 ospf interface vlan3
vlan3 is up, line protocol is up
  Interface ID 203
  IPv6 Prefixes
    fe80::200:cdff:fe24:daae/64 (Link-Local Address)
    2003:1111::2/64
  OSPFv3 Process (P1), Area 0.0.0.0, Instance ID 0
    Router ID 0.0.1.1, Network Type BROADCAST, Cost: 1
    Transmit Delay is 1 sec, State DR, Priority 1
    Designated Router (ID) 0.0.1.1
      Interface Address fe80::200:cdff:fe24:daae
    No backup designated router on this link
    Timer interval configured, Hello 10, Dead 40, Wait 40,
Retransmit 5
      Hello due in 00:00:02
    Neighbor Count is 0, Adjacent neighbor count is 0
```

Related Commands

ipv6 ospf authentication spi

ipv6 ospf encryption spi esp

show ipv6 ospf neighbor

Overview Use this command in User Exec or Privileged Exec modes to display information on OSPF neighbors. Include the process ID parameter with this command to display information about specified processes.

For information on filtering and saving command output, see the "Getting Started with AlliedWare Plus" Feature Overview and Configuration Guide.

Syntax

```
show ipv6 ospf [<process-id>] neighbor <neighbor-id>
show ipv6 ospf [<process-id>] neighbor detail
show ipv6 ospf [<process-id>] neighbor <interface> [detail]
```

Parameter	Description
<process-id>	*<character string>* The ID of the OSPF process for which information will be displayed.
<neighbor-id>	The Neighbor ID, entered in IP address (A.B.C.D) format.
detail	Detail of all neighbors.
<interface>	IP address of the interface.

Mode User Exec and Privileged Exec

Examples

```
awplus# show ipv6 ospf neighbor
```

Output Figure 28-14: Example output from **show ipv6 ospf neighbor**

```
awplus#show ipv6 ospf P1 neighbor 2.2.2.2
OSPFv3 Process (P1)
Neighbor ID     Pri       State                 Dead Time   Interface Instance ID
2.2.2.2         5         2-Way/DROther         00:00:33    vlan3              0
```

Figure 28-15: Example output from **show ipv6 ospf neighbor detail**

```
awplus#show ipv6 ospf neighbor detail
Neighbor 0.0.1.2, interface address fe80::215:77ff:fec9:7472
   In the area 0.0.0.0 via interface vlan2
   Neighbor priority is 1, State is Full, 6 state changes
   DR is 0.0.1.2     BDR is 0.0.1.1
   Options is 0x000013 (-|R|-|-|E|V6)
   Dead timer due in 00:00:33
   Database Summary List 0
   Link State Request List 0
   Link State Retransmission List 0
```

show ipv6 ospf route

Overview Use this command in User Exec or Privileged Exec modes to display the OSPF routing table. Include the process ID parameter with this command to display the OSPF routing table for specified processes.

For information on filtering and saving command output, see the "Getting Started with AlliedWare Plus" Feature Overview and Configuration Guide.

Syntax

```
show ipv6 ospf [<process-id>] route
```

Parameter	Description
<process-id>	A character string that specifies the router process. If this parameter is included, only the information for this specified routing process is displayed.

Mode User Exec and Privileged Exec

Examples To display the OSPF routing table, use the command:

```
awplus# show ipv6 ospf route
```

Output Figure 28-16: Example output from the **show ipv6 ospf P10 route** command for a specific process

```
OSPFv3 Process (P1)
Codes: C - connected, D - Discard, O - OSPF, IA - OSPF inter
area
       E1 - OSPF external type 1, E2 - OSPF external type 2

   Destination                                    Metric
     Next-hop
O  2002:1111::/64                                    2
     via fe80::200:cdff:fe24:daae, vlan3, Area 0.0.0.0
C  2003:1111::/64                                    1
     directly connected, vlan3, Area 0.0.0.0
O  2004:1111::/64                                    3
     via fe80::200:cdff:fe24:daae, vlan3, Area 0.0.0.0
C  2005:1111::/64                                    1
     directly connected, vlan5, Area 0.0.0.0
E2 2010:2222::/64                                 1/20
     via 2003:1111::1, vlan3
E2 2011:2222::/64                                 1/20
     via 2003:1111::1, vlan3
E2 2012:2222::/64                                 1/20
     via 2003:1111::1, vlan3
E2 2013:2222::/64                                 1/20
     via 2003:1111::1, vlan3
E2 2014:2222::/64                                 1/20
     via 2003:1111::1, vlan3
E2 2015:2222::/64                                 1/20
     via 2003:1111::1, vlan3
```

show ipv6 ospf virtual-links

Overview Use this command in User Exec or Privileged Exec modes to display virtual link information, including OSPFv3 Authentication status for virtual links.

For information on filtering and saving command output, see the "Getting Started with AlliedWare Plus" Feature Overview and Configuration Guide.

Syntax

```
show ipv6 ospf virtual-links
```

Mode User Exec and Privileged Exec

Usage See the OSPFv3 Feature Overview and Configuration Guide for more information and examples.

Examples To display virtual link information, use the command:

```
awplus# show ipv6 ospf virtual-links
```

Output Figure 28-17: Example output from the **show ipv6 ospf virtual-links** command showing OSPFv3 Authentication configuration information highlighted in bold

```
awplus#show ipv6 ospf virtual-links
 Virtual Link VLINK1 to router 192.168.1.10 is down
   Transit area 0.0.0.1 via interface *, instance ID 0
   Local address
   Remote address
   MD5 Authentication SPI 1000
   NULL encryption SHA-1 auth SPI 1001
   Transmit Delay is 1 sec, State Down,
   Timer intervals configured, Hello 10, Dead 40, Wait 40,
Retransmit 5
     Hello due in inactive
     Adjacency state Down
```

Related Commands

area virtual-link authentication ipsec spi

area virtual-link encryption ipsec spi

summary-address (IPv6 OSPF)

Overview Use this command in Router Configuration mode to summarize, or possibly suppress, external redistributed OSPFv3 routes within the specified address range.

Use the **no** variant of this command in Router Configuration mode to stop summarizing, or suppressing, external redistributed OSPFv3 routes within the specified address range.

Syntax

```
summary-address <ipv6-addr/prefix-length> [not-advertise] [tag
<0-4294967295>]
```

```
no summary-address <ipv6-addr/prefix-length> [not-advertise]
[tag <0-4294967295>]
```

Parameter	Description
<ipv6-addr/prefix-length>	Specifies the base IPv6 address of the IPv6 summary address. The range of addresses given as IPv6 starting address and an IPv6 prefix length.
`not-advertise`	Set the **not-advertise** option if you do not want OSPFv3 to advertise either the summary address or the individual networks within the range of the summary address.
`tag <0-4294967295>`	The tag parameter specifies the tag value that OSPFv3 places in the AS external LSAs created as a result of redistributing the summary route. The tag overrides tags set by the original route.

Default The default tag value for a summary address is 0.

Mode Router Configuration

Usage An address range is a pairing of an address and a prefix length. Redistributing routes from other protocols into OSPFv3 requires the router to advertise each route individually in an external LSA. Use this command to advertise one summary route for all redistributed routes covered by a specified prefix to decrease the size of the OSPFv3 link state database.

For example, if the specified address range is 2001:0db8:44::/48, then summary-address functionality will match 2001:0db8:4400:0000::1/128 through 2001:0db8:44ff:ffff::1/128.

Ensure OSPFv3 routes exist in the summary address range for advertisement before using this command.

Example The following example uses the `summary-address` command to aggregate external LSAs that match the IPv6 prefix `2001:0db8::/32` and assigns a tag value of `3`.

```
awplus# configure terminal
awplus(config)# router ipv6 ospf
awplus(config-router)# summary-address 2001:0db8::/32 tag 3
```

The following example uses the `no summary-address` command to stop summarizing IPv6 addresses in the address range covered within the IPv6 prefix `2001:0db8::/32`.

```
awplus# configure terminal
awplus(config)# router ipv6 ospf
awplus(config-router)# no summary-address 2001:0db8::/32
```

timers spf (IPv6 OSPF) (deprecated)

Overview This command has been deprecated because SPF timers have been replaced by exponential SPF timers. To configure the exponential timers, please use the timers spf exp (IPv6 OSPF) command instead.

timers spf exp (IPv6 OSPF)

Overview Use this command to adjust route calculation timers using exponential back-off delays.

Use **no** form of this command to return to the default exponential back-off timer values.

Syntax

```
timers spf exp <min-holdtime> <max-holdtime>
no timers spf exp <min-holdtime> <max-holdtime>
```

Parameter	Description
<min-holdtime>	Specifies the minimum delay between receiving a change to the SPF calculation in milliseconds. The range is 0-2147483647. The default SPF min-holdtime value is 50 milliseconds.
<max-holdtime>	Specifies the maximum delay between receiving a change to the SPF calculation in milliseconds. The range is 0-2147483647. The default SPF max-holdtime value is 50 seconds.

Mode Router Configuration

Usage This command configures the minimum and maximum delay time between the receipt of a topology change and the calculation of the Shortest Path First (SPF).

The time between SPF runs increases if a topology change occurs (and triggers a new SPF run) before the last SPF holdtimer has finished. The time between runs may increase up to the max-holdtime value.This increase in holdtime prevents too many SPF runs from occurring if multiple OSPF topology change events occur.

Examples To set the minimum delay time to 5 milliseconds and maximum delay time to 2 seconds, use the commands:

```
awplus# configure terminal
awplus(config)# router ipv6 ospf 100
awplus(config-router)# timers spf exp 5 2000
```

Related Commands timers spf (IPv6 OSPF) (deprecated)

undebug ipv6 ospf events

Overview This command applies the functionality of the no debug ipv6 ospf events command.

undebug ipv6 ospf ifsm

Overview This command applies the functionality of the no debug ipv6 ospf ifsm command.

undebug ipv6 ospf lsa

Overview This command applies the functionality of the no debug ipv6 ospf lsa command.

undebug ipv6 ospf nfsm

Overview This command applies the functionality of the no debug ipv6 ospf nfsm command.

undebug ipv6 ospf packet

Overview This command applies the functionality of the no debug ipv6 ospf packet command.

undebug ipv6 ospf route

Overview This command applies the functionality of the no debug ipv6 ospf route command.

29 BGP and BGP4+ Commands

Introduction

Overview

This chapter provides an alphabetical reference of commands used to configure the Border Gateway Protocol for IPv4 (BGP) and for IPv6 (BGP4+).

For basic BGP and BGP4+ introduction information and configuration examples, see the Routing_Protocol Guide.

Command List

- "address-family" on page 1105
- "aggregate-address" on page 1107
- "auto-summary (BGP only)" on page 1110
- "bgp aggregate-nexthop-check" on page 1111
- "bgp always-compare-med" on page 1112
- "bgp bestpath as-path ignore" on page 1113
- "bgp bestpath compare-confed-aspath" on page 1114
- "bgp bestpath compare-routerid" on page 1115
- "bgp bestpath med" on page 1116
- "bgp bestpath med remove-recv-med" on page 1118
- "bgp bestpath med remove-send-med" on page 1119
- "bgp client-to-client reflection" on page 1120
- "bgp cluster-id" on page 1121
- "bgp confederation identifier" on page 1123
- "bgp confederation peers" on page 1124
- "bgp config-type" on page 1126
- "bgp dampening" on page 1128
- "bgp damp-peer-oscillation (BGP only)" on page 1130

- "bgp default ipv4-unicast" on page 1131
- "bgp default local-preference (BGP only)" on page 1132
- "bgp deterministic-med" on page 1133
- "bgp enforce-first-as" on page 1135
- "bgp fast-external-failover" on page 1136
- "bgp graceful-restart" on page 1137
- "bgp graceful-restart graceful-reset" on page 1139
- "bgp log-neighbor-changes" on page 1140
- "bgp memory maxallocation" on page 1142
- "bgp nexthop-trigger-count" on page 1143
- "bgp nexthop-trigger delay" on page 1144
- "bgp nexthop-trigger enable" on page 1145
- "bgp rfc1771-path-select (BGP only)" on page 1146
- "bgp rfc1771-strict (BGP only)" on page 1147
- "bgp router-id" on page 1148
- "bgp scan-time (BGP only)" on page 1149
- "bgp update-delay" on page 1150
- "clear bgp *" on page 1151
- "clear bgp (IPv4 or IPv6 address)" on page 1152
- "clear bgp (ASN)" on page 1154
- "clear bgp external" on page 1155
- "clear bgp peer-group" on page 1156
- "clear ip bgp * (BGP only)" on page 1157
- "clear ip bgp (IPv4) (BGP only)" on page 1159
- "clear ip bgp dampening (BGP only)" on page 1160
- "clear ip bgp flap-statistics (BGP only)" on page 1161
- "clear ip bgp (ASN) (BGP only)" on page 1162
- "clear ip bgp external (BGP only)" on page 1163
- "clear ip bgp peer-group (BGP only)" on page 1164
- "clear bgp ipv6 (ipv6 address) (BGP4+ only)" on page 1165
- "clear bgp ipv6 dampening (BGP4+ only)" on page 1166
- "clear bgp ipv6 flap-statistics (BGP4+ only)" on page 1167
- "clear bgp ipv6 (ASN) (BGP4+ only)" on page 1168
- "clear bgp ipv6 external (BGP4+ only)" on page 1169
- "clear bgp ipv6 peer-group (BGP4+ only)" on page 1170

- "debug bgp (BGP only)" on page 1171
- "distance (BGP and BGP4+)" on page 1172
- "exit-address-family" on page 1174
- "ip community-list" on page 1175
- "ip community-list expanded" on page 1177
- "ip community-list standard" on page 1179
- "ip extcommunity-list expanded" on page 1181
- "ip extcommunity-list standard" on page 1183
- "ip prefix-list (IPv4 Prefix List)" on page 1185
- "ipv6 prefix-list (IPv6 Prefix List)" on page 1187
- "match as-path" on page 1189
- "match community" on page 1190
- "max-paths" on page 1192
- "neighbor activate" on page 1193
- "neighbor advertisement-interval" on page 1196
- "neighbor allowas-in" on page 1199
- "neighbor as-origination-interval" on page 1202
- "neighbor attribute-unchanged" on page 1204
- "neighbor capability graceful-restart" on page 1207
- "neighbor capability orf prefix-list" on page 1210
- "neighbor capability route-refresh" on page 1213
- "neighbor collide-established" on page 1216
- "neighbor default-originate" on page 1218
- "neighbor description" on page 1221
- "neighbor disallow-infinite-holdtime" on page 1224
- "neighbor dont-capability-negotiate" on page 1226
- "neighbor ebgp-multihop" on page 1229
- "neighbor enforce-multihop" on page 1232
- "neighbor filter-list" on page 1235
- "neighbor interface" on page 1238
- "neighbor local-as" on page 1239
- "neighbor maximum-prefix" on page 1241
- "neighbor next-hop-self" on page 1244
- "neighbor override-capability" on page 1247
- "neighbor passive" on page 1249

- "neighbor password" on page 1251
- "neighbor peer-group (add a neighbor)" on page 1255
- "neighbor peer-group (create a peer-group)" on page 1257
- "neighbor port" on page 1258
- "neighbor prefix-list" on page 1260
- "neighbor remote-as" on page 1263
- "neighbor remove-private-AS (BGP only)" on page 1266
- "neighbor restart-time" on page 1268
- "neighbor route-map" on page 1270
- "neighbor route-reflector-client (BGP only)" on page 1274
- "neighbor route-server-client (BGP only)" on page 1276
- "neighbor send-community" on page 1277
- "neighbor shutdown" on page 1280
- "neighbor soft-reconfiguration inbound" on page 1282
- "neighbor timers" on page 1285
- "neighbor transparent-as" on page 1288
- "neighbor transparent-nexthop" on page 1290
- "neighbor unsuppress-map" on page 1292
- "neighbor update-source" on page 1295
- "neighbor version (BGP only)" on page 1298
- "neighbor weight" on page 1300
- "network (BGP and BGP4+)" on page 1303
- "network synchronization" on page 1306
- "redistribute (into BGP or BGP4+)" on page 1307
- "restart bgp graceful (BGP only)" on page 1309
- "router bgp" on page 1310
- "route-map" on page 1311
- "set as-path" on page 1314
- "set community" on page 1315
- "show bgp ipv6 (BGP4+ only)" on page 1317
- "show bgp ipv6 community (BGP4+ only)" on page 1318
- "show bgp ipv6 community-list (BGP4+ only)" on page 1320
- "show bgp ipv6 dampening (BGP4+ only)" on page 1321
- "show bgp ipv6 filter-list (BGP4+ only)" on page 1322
- "show bgp ipv6 inconsistent-as (BGP4+ only)" on page 1323

- "show bgp ipv6 longer-prefixes (BGP4+ only)" on page 1324
- "show bgp ipv6 neighbors (BGP4+ only)" on page 1325
- "show bgp ipv6 paths (BGP4+ only)" on page 1328
- "show bgp ipv6 prefix-list (BGP4+ only)" on page 1329
- "show bgp ipv6 quote-regexp (BGP4+ only)" on page 1330
- "show bgp ipv6 regexp (BGP4+ only)" on page 1331
- "show bgp ipv6 route-map (BGP4+ only)" on page 1332
- "show bgp ipv6 summary (BGP4+ only)" on page 1333
- "show bgp memory maxallocation (BGP only)" on page 1334
- "show bgp nexthop-tracking (BGP only)" on page 1335
- "show bgp nexthop-tree-details (BGP only)" on page 1336
- "show debugging bgp (BGP only)" on page 1337
- "show ip bgp (BGP only)" on page 1338
- "show ip bgp attribute-info (BGP only)" on page 1339
- "show ip bgp cidr-only (BGP only)" on page 1340
- "show ip bgp community (BGP only)" on page 1341
- "show ip bgp community-info (BGP only)" on page 1343
- "show ip bgp community-list (BGP only)" on page 1344
- "show ip bgp dampening (BGP only)" on page 1345
- "show ip bgp filter-list (BGP only)" on page 1347
- "show ip bgp inconsistent-as (BGP only)" on page 1348
- "show ip bgp longer-prefixes (BGP only)" on page 1349
- "show ip bgp neighbors (BGP only)" on page 1350
- "show ip bgp neighbors connection-retrytime (BGP only)" on page 1353
- "show ip bgp neighbors hold-time (BGP only)" on page 1354
- "show ip bgp neighbors keepalive (BGP only)" on page 1355
- "show ip bgp neighbors keepalive-interval (BGP only)" on page 1356
- "show ip bgp neighbors notification (BGP only)" on page 1357
- "show ip bgp neighbors open (BGP only)" on page 1358
- "show ip bgp neighbors rcvd-msgs (BGP only)" on page 1359
- "show ip bgp neighbors sent-msgs (BGP only)" on page 1360
- "show ip bgp neighbors update (BGP only)" on page 1361
- "show ip bgp paths (BGP only)" on page 1362
- "show ip bgp prefix-list (BGP only)" on page 1363
- "show ip bgp quote-regexp (BGP only)" on page 1364

- "show ip bgp regexp (BGP only)" on page 1366
- "show ip bgp route-map (BGP only)" on page 1368
- "show ip bgp scan (BGP only)" on page 1369
- "show ip bgp summary (BGP only)" on page 1370
- "show ip community-list" on page 1372
- "show ip extcommunity-list" on page 1373
- "show ip prefix-list (IPv4 Prefix List)" on page 1374
- "show ip protocols bgp (BGP only)" on page 1375
- "show ipv6 prefix-list (IPv6 Prefix List)" on page 1376
- "show route-map" on page 1377
- "synchronization" on page 1378
- "timers (BGP)" on page 1379
- "undebug bgp (BGP only)" on page 1380

address-family

Overview This command enters the IPv4 or IPv6 Address-Family Configuration command mode. In this mode you can configure address-family specific parameters.

When using VRF-lite, you can enter IPv4 Address Family Configuration mode for a specified VRF instance before configuring that instance.

Syntax [BGP]

```
address-family ipv4 [unicast]
no address-family ipv4 [unicast]
```

Syntax (VRF-lite)

```
address-family ipv4 [unicast|vrf <vrf-name>]
no address-family ipv4 [unicast|vrf <vrf-name>]
```

Syntax [BGP4+]

```
address-family ipv6 [unicast]
no address-family ipv6 [unicast]
```

Parameter	Description
`ipv4`	Configure parameters relating to the exchange of IPv4 prefixes.
`ipv6`	Configure parameters relating to the exchange of IPv6 prefixes.
`unicast`	Configure parameters relating to the exchange of routes to unicast destinations.
`vrf`	Applies the command to the specified VRF instance.
`<vrf-name>`	The name of the VRF instance to enter IPv4 Address-Family mode for.

Mode [BGP] Router Configuration

Mode [BGP4+] Router Configuration

Usage To leave the IPv4 or IPv6 Address Family Configuration mode, and return to the Router Configuration mode, use the exit-address-family command.

Example [BGP]

```
awplus# configure terminal
awplus(config)# router bgp 100
awplus(config-router)# neighbor 192.168.0.1 remote-as 100
awplus(config-router)# address-family ipv4 vrf green
awplus(config-router-af)# neighbor 192.168.0.1 activate
awplus(config-router-af)# exit-address-family
awplus(config-router)#
```

Example [BGP4+]

```
awplus# configure terminal
awplus(config)# router bgp 100
awplus(config-router)# neighbor 2001:0db8:010d::1 remote-as 100
awplus(config-router)# address-family ipv6
awplus(config-router-af)# neighbor 2001:0db8:010d::1 activate
awplus(config-router-af)# exit-address-family
awplus(config-router)#
```

Related Commands exit-address-family

Command changes Version 5.4.6-2.1: VRF-lite support added.

aggregate-address

Overview This command adds an aggregate route that can be advertised to BGP or BGP4+ neighbors. This command creates an aggregate entry in the BGP or BGP4+ routing table if the device learns, by any means, any routes that are within the range configured by the aggregate address/mask.

When this command is used with the **summary-only** option, the more-specific routes of the aggregate are suppressed to all neighbors. Use the neighbor unsuppress-map command instead to selectively leak more-specific routes to a particular neighbor.

The **no** variant of this command removes the aggregate configured by the **aggregate-address** command.

Syntax [BGP]

```
aggregate-address <ip-addr/m> {summary-only|as-set}
no aggregate-address <ip-addr/m> {summary-only|as-set}
```

Syntax [BGP4+]

```
aggregate-address <ipv6-addr/prefix-length>
{summary-only|as-set}
no aggregate-address <ipv6-addr/prefix-length>
{summary-only|as-set}
```

Parameter	Description
<ip-addr/m>	Specifies the aggregate IPv4 address and mask.
<ipv6-addr/prefix-length>	Specifies the aggregate IPv6 address. The IPv6 address uses the format X:X::X:X/Prefix-Length. The prefix-length is usually set between 0 and 64.
`summary-only`	Filters more specific routes from updates. Only the aggregate address/mask will be advertised, and none of the component addresses that fall within the range of the aggregate address/mask.
`as-set`	Generates AS set path information. The AS-path advertised with the aggregate is an unordered list of all the AS-numbers that appear in any of the AS-paths of the component routes, with each AS-number appearing just once in the list.

Mode [BGP] Router Configuration or IPv4 Address Family Configuration

Mode [BGP4+] IPv6 Address Family Configuration

Usage [BGP] If the `summary-only` parameter is specified, then only the aggregate address/mask will be advertised, and none of the component addresses that fall within the range of the aggregate address/mask. For example, if you configure:

```
awplus# configure terminal

awplus(config)# router bgp 100

awplus(config-router)# aggregate-address 172.0.0.0/8 summary-
only
```

then the device will advertise the prefix `172.0.0.0/8`, but no component routes like `172.10.0.0/16`

The `as-set` parameter controls the AS-path attribute that is advertised with the aggregate route. If the device has learned multiple routes that are within the range of the aggregate address/mask, and the AS-paths associated with those routes contain different sets of AS-numbers, then it is not possible to create a single AS-path that accurately represents the AS-paths of all those component routes. In this case, the device will, by default, advertise a NULL AS-path with the aggregate.

Usage [BGP4+]

If the `summary-only` parameter is specified, then only the aggregate address/mask will be advertised, and none of the component addresses that fall within the range of the aggregate address/mask. For example, if you configure:

```
awplus# configure terminal

awplus(config)# router bgp 100

awplus(config-router)#address-family ipv6

awplus(config-router-af)# aggregate-address 2001:0db8::/64
summary-only
```

then the device will advertise the prefix 2001:0db8::/64, but no component routes like 2001:0db8:010d::1/128

Examples [BGP]

```
awplus# configure terminal
awplus(config)# router bgp 100
awplus(config-router)# aggregate-address 192.0.0.0/8 as-set
summary-only
awplus# configure terminal
awplus(config)# router bgp 100
awplus(config-router)# no aggregate-address 192.0.0.0/8 as-set
summary-only
```

Examples [BGP4+]

```
awplus# configure terminal
awplus(config)# router bgp 100
awplus(config-router)# address family ipv6
awplus(config-router-af)# aggregate-address 2001:0db8::/64
as-set summary-only
awplus# configure terminal
awplus(config)# router bgp 100
awplus(config-router)# address family ipv6
awplus(config-router-af)# no aggregate-address 2001:0db8::/64
as-set summary-only
```

Related Commands

aggregate-address

match as-path

auto-summary (BGP only)

Overview Use this command to enable sending summarized routes by a BGP speaker to its peers in the Router Configuration mode or in the Address-Family Configuration mode. BGP uses auto-summary to advertise summarized routes.

Use the **no** variant of this command to disable BGP auto-summary.

Syntax

```
auto-summary
no auto-summary
```

Default The auto-summary function is disabled by default.

Mode Router Configuration and Address Family IPv4 mode

Usage If certain routes have already been advertised, enabling auto-summary results in non- summarized routes being withdrawn and only summarized routes are advertised. Summarized routes are advertised before non-summarized routes are withdrawn from all connected peers.

If certain routes have already been advertised, disabling auto-summary results in summarized routes being withdrawn and only non-summarized routes are advertised. Non-summarized routes are advertised before summarized routes are withdrawn from all connected peers.

Examples The following example enables auto-summary in Router Configuration mode:

```
awplus# configure
awplus(config)# router bgp 100
awplus(config-router)# auto-summary
```

The following example disables auto-summary in Router Configuration mode:

```
awplus# configure terminal
awplus(config)# router bgp 100
awplus(config-router)# no auto-summary
```

The following example enables auto-summary in Address Family IPv4 mode:

```
awplus# configure terminal
awplus(config)# router bgp 100
awplus(config-router)# address-family ipv4
awplus(config-router-af)# auto-summary
```

The following example disables auto-summary in Address Family IPv4 mode:

```
awplus# configure terminal
awplus(config)# router bgp 100
awplus(config-router)# address-family ipv4
awplus(config-router-af)# no auto-summary
```

bgp aggregate-nexthop-check

Overview This command affects the operation of the summary-only option on the aggregate-address command.

This command enables a mode whereby the summary-only option will only suppress the component routes if those component routes all have the same next hop. If the routes have different next hops, then they will continue to be advertised to peers even if the summary-only option is configured. By default this is disabled.

The **no** variant of this command disables this function.

Syntax

```
bgp aggregate-nexthop-check
no bgp aggregate-nexthop-check
```

Default Disabled by default.

Mode Global Configuration

Example

```
awplus# configure terminal
awplus(config)# bgp aggregate-nexthop-check
```

bgp always-compare-med

Overview This command enables BGP to compare the Multi Exit Discriminator (MED) for paths from neighbors in different autonomous systems.

Multi Exit Discriminator (MED) is used in best path selection by BGP. MED is compared after BGP attributes weight, local preference, AS-path and origin have been compared and are equal.

By default, MED comparison is done only among routes from the same autonomous system (AS). Use the **bgp always-compare-mode** command to allow comparison of MEDs from different ASs.

A path with a lower MED value is preferred. For example, if the bgp table contains the following entries, and the **bgp always-compare-med** command has been issued to enable this feature:

- Route1: as-path 400, med 300
- Route2: as-path 200, med 200
- Route3: as-path 400, med 250

Route1 is compared to Route2. Route2 is best of the two (lower MED). Next, Route2 is compared to Route3 and Route2 is chosen best path again (lower MED). If **always-compare-med** was disabled, MED is not taken into account when Route1 and Route2 are compared, because of different ASs and MED is compared for only Route1 and Route3. In this case, Route3 would be the best path. The selected route is also affected by the **bgp deterministic-med** command. See the bgp deterministic-med command for details.

If this command is used to compare MEDs for all paths, it should be configured on every BGP router in the AS.

The **no** variant of this command disallows the comparison.

Syntax

```
bgp always-compare-med
no bgp always-compare-med
```

Default By default this feature is disabled.

Mode Router Configuration

Example

```
awplus# configure terminal
awplus(config)# router bgp 100
awplus(config-router)# bgp always-compare-med
```

Related Commands

bgp bestpath med

bgp bestpath as-path ignore

bgp bestpath compare-routerid

bgp deterministic-med

bgp bestpath as-path ignore

Overview This command prevents the router from considering as-path as a factor in the algorithm for choosing a route.

The **no** variant of this command allows the router to consider as-path in choosing a route.

Syntax

```
bgp bestpath as-path ignore
no bgp bestpath as-path ignore
```

Mode Router Configuration

Example

```
awplus# configure terminal
awplus(config)# router bgp 100
awplus(config-router)# bgp bestpath as-path ignore
```

Related Commands

bgp always-compare-med

bgp bestpath med

bgp bestpath compare-routerid

bgp bestpath compare-confed-aspath

Overview This command specifies that the AS confederation path length must be used, when available, in the BGP best path decision process. It is effective only when bgp bestpath as-path ignore command has not been specified.

By default, if BGP receives routes with identical eBGP paths from eBGP peers, BGP does not continue to consider any AS confederation path length attributes that may be associated with the routes.

The **no** variant of this command returns the device to the default state, where the device ignores AS confederation path length in the BGP best path selection process.

Syntax
```
bgp bestpath compare-confed-aspath
no bgp bestpath compare-confed-aspath
```

Mode Router Configuration

Example
```
awplus# configure terminal
awplus(config)# router bgp 100
awplus(config-router)# bgp bestpath compare-confed-aspath
```

Related Commands bgp bestpath as-path ignore

bgp bestpath compare-routerid

Overview By default, when comparing similar routes from peers, BGP does not consider the router ID of neighbors advertising the routes - BGP simply selects the first received route. Use this command to include router ID in the selection process; similar routes are compared and the route with the lowest router ID is selected.

The **no** variant of this command disables this feature, and returns the device to the default state, where the device ignores the router ID in the BGP best path selection process.

Syntax
```
bgp bestpath compare-routerid
no bgp bestpath compare-routerid
```

Mode Router Configuration

Example
```
awplus# configure terminal
awplus(config)# router bgp 100
awplus(config-router)# bgp bestpath compare-routerid
```

Related Commands show ip bgp (BGP only)

show bgp ipv6 neighbors (BGP4+ only)

bgp bestpath med

Overview This command controls how the Multi Exit Discriminator (MED) attribute comparison is performed.

Use the **no** variant of this command to prevent BGP from considering the MED attribute when comparing paths.

Syntax

```
bgp bestpath med {[confed] [missing-as-worst]}
```

Parameter	Description
`confed`	Compares MED among confederation paths.
`missing-as-worst`	Treats missing MED as the least preferred one.

Mode Router Configuration

Usage The **confed** parameter enables MED comparison among paths learned from confederation peers. The MED attributes are compared only if there is no external AS (Autonomous System), where an external AS is one that is not within the confederation. If there is an external AS in the path, then the MED comparison is not made.

For example, in the following paths the MED value is not compared with `Path3` since it is not in the confederation. MED is compared for `Path1` and `Path2` only.

- Path1 = 32000 32004, med=4
- Path2 = 32001 32004, med=2
- Path3 = 32003 1, med=1

The effect of the **missing-as-worst** parameter is to treat a missing MED attribute in a path as having a value of infinity, making the path without a MED value the least desirable path. If the **missing-as-worst** parameter is not configured, the missing MED attribute is assigned the value of 0, making the path with the missing MED attribute the best path.

Examples

```
awplus# configure terminal
awplus(config)# router bgp 100
awplus(config-router)# bgp bestpath med missing-as-worst
awplus# configure terminal
awplus(config)# router bgp 100
awplus(config-router)# bgp bestpath med confed
awplus# configure terminal
awplus(config)# router bgp 100
awplus(config-router)# bgp bestpath med confed missing-as-worst
```

Related Commands

bgp always-compare-med

bgp bestpath as-path ignore

bgp deterministic-med

bgp bestpath med remove-recv-med

Overview This command removes the Multi Exit Discriminator (MED) attribute from the update messages received by the BGP speaker from its peers. However, the local BGP speaker will send MED attributes in the update messages to its peers, unless specified not to by the **bgp bestpath med remove-send-med** command.

Use the **no** variant of this command to disable this feature.

Syntax

```
bgp bestpath med remove-recv-med
no bgp bestpath med remove-recv-med
```

Mode Router Configuration

Example To enable the **remove-recv-med** feature on the BGP speaker belonging to the Autonomous System (AS) 100, enter the command:

```
awplus# configure terminal
awplus(config)# router bgp 100
awplus(config-router)# bgp bestpath med remove-recv-med
```

Related Commands bgp bestpath med remove-send-med

bgp bestpath med remove-send-med

Overview This command removes the Multi Exit Discriminator (MED) attribute from the update messages sent by the BGP speaker to its peers. However, the local BGP speaker will consider the MED attribute received from other peers during the decision and route selection process, unless specified not to by the **bgp bestpath med remove-recv-med** command.

Use the **no** variant of this command to disable this feature.

Syntax

```
bgp bestpath med remove-send-med
no bgp bestpath med remove-send-med
```

Mode Router Configuration

Example To enable the **remove-send-med** feature on the BGP speaker belonging to the Autonomous System (AS) 100, enter the command:

```
awplus# configure terminal
awplus(config)# router bgp 100
awplus(config-router)# bgp bestpath med remove-send-med
```

Related Commands bgp bestpath med remove-recv-med

bgp client-to-client reflection

Overview This command restores route reflection from a BGP route reflector to clients, and is used to configure routers as route reflectors. Route reflectors are used when all Interior Border Gateway Protocol (iBGP) speakers are not fully meshed.

If the clients are fully meshed the route reflector is not required, use the **no** variant of this command to disable the client-to-client route reflection.

When a router is configured as a route reflector, client-to-client reflection is enabled by default.

The **no** variant of this command turns off client-to-client reflection.

Syntax
```
bgp client-to-client reflection
no bgp client-to-client reflection
```

Default This command is enabled by default.

Mode Router Configuration

Example
```
awplus# configure terminal
awplus(config)# router bgp 100
awplus(config-router)# no bgp client-to-client reflection
```

Related Commands
bgp cluster-id

neighbor route-reflector-client (BGP only)

show bgp ipv6 (BGP4+ only)

show ip bgp (BGP only)

bgp cluster-id

Overview This command configures the cluster-id if the BGP cluster has more than one route reflector. A cluster includes one or more route reflectors and their clients. Usually, each cluster is identified by the router-id of its single route reflector. However, to increase redundancy, a cluster may sometimes have more than one route reflector. All router reflectors in such a cluster are then identified by a cluster-id.

The **bgp cluster-id** command is used to configure the 4 byte cluster ID for clusters with more than one route reflector.

The **no** variant of this command removes the cluster ID.

Syntax

```
bgp cluster-id {<ip-address>|<cluster-id>}
no bgp cluster-id
```

Parameter	Description	
<cluster-id>	<1-4294967295>	Route Reflector cluster-id as a 32 bit quantity.
<ip-address>	*A.B.C.D*	Route Reflector Cluster-id in IP address format.

Mode Router Configuration

Usage The following configuration creates `cluster-id 5` including two route-reflector- clients.

```
awplus(config)# router bgp 200
awplus(config-router)# neighbor 2.2.2.2 remote-as 200
awplus(config-router)# neighbor 3.3.3.3 remote-as 200
awplus(config-router)# neighbor 3.3.3.3 route-reflector-client
awplus(config-router)# neighbor 5.5.5.5 remote-as 200
awplus(config-router)# neighbor 5.5.5.5 route-reflector-client
awplus(config-router)# neighbor 6.6.6.6 remote-as 200
awplus(config-router)# bgp cluster-id 5
```

Examples To add a **bgp cluster-id**, apply the example commands as shown below:

```
awplus# configure terminal
awplus(config)# router bgp 100
awplus(config-router)# bgp cluster-id 10.10.1.1
```

To remove a bgp cluster-id apply the example commands as shown below:

```
awplus# configure terminal
awplus(config)# router bgp 100
awplus(config-router)# no bgp cluster-id 10.10.1.1
```

Related Commands

bgp client-to-client reflection

neighbor route-reflector-client (BGP only)

show bgp ipv6 (BGP4+ only)

show ip bgp (BGP only)

bgp confederation identifier

Overview This command specifies a BGP confederation identifier.

The **no** variant of this command removes all BGP confederation identifiers.

Syntax

```
bgp confederation identifier <1-4294967295>
no bgp confederation identifier
```

Parameter	Description
<1-4294967295>	Set routing domain confederation AS number.

Mode Router Configuration

Examples

```
awplus# configure terminal
awplus(config)# router bgp 100
awplus(config-router)# bgp confederation identifier 1
awplus# configure terminal
awplus(config)# router bgp 100
awplus(config-router)# no bgp confederation identifier
```

Related Commands bgp confederation peers

bgp confederation peers

Overview This command configures the Autonomous Systems (AS) that belong to the same confederation as the current device.

A confederation allows an AS to be divided into several sub-ASs. The overall AS is given a confederation identifier. External routers view only the whole confederation as one AS, whose AS number is the confederation identifier. Each sub-AS is fully meshed within itself and is visible internally to the confederation.

Use the **bgp confederation peer** command to define the list of AS numbers of the sub-ASs in the confederation containing the current device.

The **no** variant of this command removes an autonomous system from the confederation.

Syntax

```
bgp confederation peers <1-4294967295>
no bgp confederation peers <1-4294967295>
```

Parameter	Description
<1-4294967295>	AS numbers of eBGP peers that are under same confederation but in a different sub-AS.

Mode Router Configuration

Usage In the following configuration of **Router 1** the neighbor `172.210.30.2` and `172.210.20.1` have iBGP connection within AS `100`. The neighbor `173.213.30.1` has an BGP connection, but it is within AS `200`, which is part of the same confederation. The neighbor `6.6.6.6` has an eBGP connection to external AS `500`.

In the configuration of **Router 2**, neighbor `5.5.5.4` has an eBGP connection to confederation `300`. `Router2` does not know about the ASs `100` and `200`, it only knows about confederation `300`.

Router 1

```
awplus(config)# router bgp 100
awplus(config-router)# bgp confederation identifier 300
awplus(config-router)# bgp confederation peers 200
awplus(config-router)# neighbor 172.210.30.2 remote-as 100
awplus(config-router)# neighbor 172.210.20.1 remote-as 100
awplus(config-router)# neighbor 173.213.30.1 remote-as 200
awplus(config-router)# neighbor 6.6.6.6 remote-as 300
```

Router 2

```
awplus(config)# router bgp 500
awplus(config-router)# neighbor 5.5.5.4 remote-as 300
```

Example

```
awplus# configure terminal
awplus(config)# router bgp 100
awplus(config-router)# bgp confederation peers 1234
```

Related Commands

bgp confederation identifier

bgp config-type

Overview Use this command to set the BGP configuration type to either **standard** or **enhanced** types. When you configure the **enhanced** type, then BGP and BGP4+ communities are allowed to be sent and received by default. The **enhanced** type is configured by default.

Use the **no** variant of this command to restore the default BGP configuration type (**enhanced**).

Syntax

```
bgp config-type {standard|enhanced}
no bgp config-type
```

Parameter	Description
`standard`	Specifies the industry standard style configuration. After setting the configuration to standard, make sure to use the neighbor send-community command to send out BGP community attributes. The synchronization command is enabled in the Global Configuration mode and is shown in the configuration.
`enhanced`	Specifies the enhanced style configuration. The enhanced configuration type requires no specific configuration for sending out BGP standard community and extended community attributes. The synchronization command is enabled by default in the Global Configuration mode and is not shown in configuration output.

Default By default, the BGP configuration type is **enhanced**.

Mode Global Configuration

Usage Note that the **enhanced** type default configuration may cause issues in some networks if unauthorized BGP peers are advertising BGP communities to adjust routing decisions.

Changing modes requires you to **reload** your device for the change to take effect:

```
awplus(config)#bgp config-type standard
awplus(config)#exit
awplus#reload
reboot system? (y/n): y
```

When your device reloads, it will load with the standard BGP settings commonly used by most vendors. Apply the **standard** type configuration if you have interoperability issues.

Examples To specify the `standard` BGP configuration type, enter the following commands:

```
awplus# configure terminal
awplus(config)# bgp config-type standard
```

To specify the `enhanced` BGP configuration type, enter the following commands:

```
awplus# configure terminal
awplus(config)# bgp config-type enhanced
```

To restore the default BGP configuration type (`enhanced`), enter the following commands:

```
awplus# configure terminal
awplus(config)# no bgp config-type
```

Related Commands

neighbor send-community

synchronization

bgp dampening

Overview This command enables BGP and BGP4+ dampening and sets BGP and BGP4+ dampening parameters. BGP4+ dampening is available from the IPv6 Address Family Configuration mode. BGP dampening is available from the Router Configuration mode.

The **no** variant of this command disables BGP dampening or unsets the BGP dampening parameters.

Syntax

```
bgp dampening
no bgp dampening
bgp dampening <reachtime>
no bgp dampening <reachtime>
bgp dampening <reachtime> <reuse> <suppress> <maxsuppress> <unreachtime>
no bgp dampening <reachtime> <reuse> <suppress> <maxsuppress> <unreachtime>
bgp dampening route-map <routemap-name>
no bgp dampening route-map <routemap-name>
```

Parameter	Description
<reachtime>	<1-45> Specifies the reachability half-life time in minutes. The time for the penalty to decrease to one-half of its current value. The default is 15 minutes.
<reuse>	<1-20000> Specifies the reuse limit value. When the penalty for a suppressed route decays below the reuse value, the routes become unsuppressed. The default reuse limit is 750
<suppress>	<1-20000> Specifies the suppress limit value. When the penalty for a route exceeds the suppress value, the route is suppressed. The default suppress limit is 2000.
<maxsuppress>	<1-255> Specifies the max-suppress-time. Maximum time that a dampened route is suppressed. The default max-suppress value is 4 times the half-life time (60 minutes).
<unreachtime>	<1-45> Specifies the un-reachability half-life time for penalty, in minutes.
route-map	Route-map to specify criteria for dampening.
<routemap-name>	Specify the name of the route-map.

Mode [BGP] Router Configuration

Mode [BGP4+] IPv6 Address Family Configuration

Usage Route dampening minimizes the instability caused by route flapping. A penalty is added for every flap in a flapping route. As soon as the total penalty reaches the **suppress** limit the advertisement of the route is suppressed. This penalty is decayed according to the configured **half time** value. Once the penalty is lower than the **reuse** limit, the route advertisement is un-suppressed.

The dampening information is purged from the router once the penalty becomes less than half of the **reuse** limit.

Example [BGP]

```
awplus# configure terminal
awplus(config)# router bgp 11
awplus(config-router)# bgp dampening 20 800 2500 80 25
```

Example [BGP4+]

```
awplus# configure terminal
awplus(config)# router bgp 11
awplus(config-router)# address-family ipv6
awplus(config-router-af)# bgp dampening 20 800 2500 80 25
```

bgp damp-peer-oscillation (BGP only)

Overview Use this command to enable BGP peer oscillating connection damping.

Use the **no** variant of this command to disable BGP peer oscillating connection damping.

Syntax

```
bgp damp-peer-oscillations
no bgp damp-peer-oscillations
```

Default By default, this functionality is enabled and will not appear in the **show running-config** command output.

Mode Router Configuration

Usage BGP peers in AlliedWare Plus will automatically attempt to form connections with configured neighbors. Due to misconfiguration these connections may fail and continue to fail until such time as the misconfiguration is detected and fixed. During this time, BGP can quickly cycle through the state machine from Idle through the various Connect states, which can result in large numbers of TCP sessions being opened in a short period of time.

This command instead adds a delay after a peer enters the Idle state before it can progress to the later states. The default delay is 0 second, increasing by 1 second for each unsuccessful connection attempt, to a maximum of 5 seconds. After a successful BGP route update has been received over a connection, the delay will be reset to 0. This command implements the DampPeerOscillations FSM behavior described in section 8.1 of RFC 4271.

The command is enabled by default. When disabled, peers will transition out of the Idle state immediately. The command applies globally to all currently configured BGP peers and all future peers to be created.

Example To disable peer connection damping, use the commands:

```
awplus# configure terminal
awplus(config)# router bgp 1
awplus(config-router)# no bgp damp-peer-oscillations
```

bgp default ipv4-unicast

Overview This command configures BGP defaults and activates IPv4-unicast for a peer by default. This affects BGP global configuration. By default, BGP exchanges IPv4 prefixes with a peer.

The **no** variant of this command disables this function. The BGP routing process will no longer exchange IPv4 addressing information with BGP neighbor routers. Note that disabling the exchange of IPv4 prefixes will also enable an IPv6 only BGP4+ network.

Syntax
```
bgp default ipv4-unicast
no bgp default ipv4-unicast
```

Default This is enabled by default.

Mode Router Configuration

Usage Use the negated form of this command to enable an IPv6 only BGP4+ network.

Examples
```
awplus# configure terminal
awplus(config)# router bgp 100
awplus(config-router)# bgp default ipv4-unicast
awplus# configure terminal
awplus(config)# router bgp 100
awplus(config-router)# no bgp default ipv4-unicast
```

bgp default local-preference (BGP only)

Overview This command changes the default local preference value.

The local preference indicates the preferred path when there are multiple paths to the same destination. The path with the higher preference is preferred.

Use this command to define the default local preference value that the device will advertise for the routes it sends. The preference is sent to all routers and access servers in the local autonomous system.

The **no** variant of this command reverts to the default local preference value of 100.

Syntax

```
bgp default local-preference <pref-value>
no bgp default local-preference [<pref-value>]
```

Parameter	Description
<pref-value>	<0-4294967295> Configure default local preference value. The default local preference value is 100.

Default By default the local-preference value is 100.

Mode Router Configuration

Examples

```
awplus# configure terminal
awplus(config)# router bgp 100
awplus(config-router)# bgp default local-preference 2345555
awplus# configure terminal
awplus(config)# router bgp 100
awplus(config-router)# no bgp default local-preference
```

bgp deterministic-med

Overview Use this command to allow or disallow the device to compare the Multi Exit Discriminator (MED) variable when choosing among routes advertised by different peers in the same autonomous system (AS).

Use the **bgp deterministic-med** command to enable this feature to allow the comparison of MED variables when choosing among routes advertised by different peers in the same AS.

Use the **no** variant of this command to disable this feature to disallow the comparison of the MED variable when choosing among routes advertised by different peers in the same AS.

Syntax

```
bgp deterministic-med
no bgp deterministic-med
```

Default Disabled

Mode Router Configuration

Usage When the **bgp deterministic-med** command is enabled, routes from the same AS are grouped together and ordered according to their MED values, and the best routes of each group are compared.

The main benefit of this is that the choice of best route then does not depend on the order in which the routes happened to be received, which is rather random and arbitrary.

To see how this works, consider the following set of bgp table entries, all for the same route:

```
1: ASPATH 234, MED 120, internal, IGP metric to NEXT_HOP 40
2: ASPATH 389, MED 190, internal, IGP metric to NEXT_HOP 35
3: ASPATH 234, MED 245, external
```

If **bgp deterministic-med** is not enabled, then entry `3` will be chosen, because it is an external route.

But if BGP deterministic-MED is enabled, the entries will be grouped as follows:

```
Group 1:  1: ASPATH 234, MED 120, internal, IGP metric to NEXT_HOP 40
          3: ASPATH 234, MED 245, external
Group 2:  2: ASPATH 389, MED 190, internal, IGP metric to NEXT_HOP 35
```

NOTE: *Routes from the same AS are grouped together and ordered by MED.*

Entry `1` is chosen as the best route from `Group 1`, since this route has the lowest MED value. Entry 2 has to be the best route in `Group 2`, since this is the only route in that group. These two group winners are compared against each other, and

Entry 2 is chosen as the best route because Entry 2 has the lower metric to next-hop.

All routers in an AS should have the same setting for BGP deterministic-MED. All routers in an AS should have BGP deterministic-MED enabled with **bgp deterministic-med**, or all routers in an AS should have BGP deterministic-MED disabled with **no bgp-deterministic- med**.

In the example above, the MED values were not considered when comparing the winners of the two groups (the best routes from the different ASs). To use MED in the comparison of routes from different ASs, use the bgp always-compare-med command.

Examples

```
awplus# configure terminal
awplus(config)# router bgp 100
awplus(config-router)# bgp deterministic-med
awplus# configure terminal
awplus(config)# router bgp 100
awplus(config-router)# no bgp deterministic-med
```

Related Commands

show ip bgp (BGP only)

show bgp ipv6 neighbors (BGP4+ only)

show ip bgp neighbors (BGP only)

bgp enforce-first-as

Overview Use this command to enforce the denying of eBGP updates in which the neighbor's AS number is not the first AS in the AS-path attribute.

Use the **no** variant of this command to disable this feature.

Syntax
```
bgp enforce-first-as
no bgp enforce-first-as
```

Mode Router Configuration

Usage This command specifies that any updates received from an external neighbor that do not have the neighbor's configured Autonomous System (AS) at the beginning of the AS_PATH in the received update must be denied. Enabling this feature adds to the security of the BGP network by not allowing traffic from unauthorized systems.

Example
```
awplus# configure terminal
awplus(config)# router bgp 100
awplus(config-router# bgp enforce-first-as
```

bgp fast-external-failover

Overview Use this command to reset a BGP session immediately if the interface used for BGP connection goes down.

Use the **no** variant of this command to disable this feature.

Syntax

```
bgp fast-external-failover
no bgp fast-external-failover
```

Default Enabled

Mode Router Configuration

Example

```
awplus# configure terminal
awplus(config)# router bgp 100
awplus(config-router)# bgp fast-external-failover
```

bgp graceful-restart

Overview Use this command to enable BGP and BGP4+ graceful-restart capabilities for restart and stalepath times.

Use the **no** variant of this command to restore restart timers to their default settings.

Syntax

```
bgp graceful-restart [restart-time <delay-value>|
stalepath-time <delay-value>]
```

```
no bgp graceful-restart [restart-time|stalepath-time]
```

Parameter	Description
`restart-time`	The maximum time needed for neighbors to restart, in seconds. The default restart-time is 120 seconds.
`stalepath-time`	The maximum time to retain stale paths from restarting neighbors, in seconds. The default stalepath-time is 120 seconds.
`<delay-value>`	<1-3600> Maximum time in seconds.

Default Graceful restart is disabled by default. If you enable it and do not specify the restart-time and stalepath-time, they default to 120 seconds.

Mode Router Configuration

Usage The **restart-time** parameter is used for setting the maximum time that a graceful-restart neighbor waits to come back up after a restart. This **restart-time** value is applied to neighbors unless you explicitly override it by configuring the corresponding value on the neighbor.

The **stalepath-time** parameter is used to set the maximum time to preserve stale paths from a gracefully restarted neighbor. All stalepaths, unless reinstated by the neighbor after a re-establishment, will be deleted when time, as specified by the **stalepath-time** parameter, expires.

Examples To enable graceful restart, use the commands:

```
awplus# configure terminal
awplus(config)# router bgp 10
awplus(config-router)# bgp graceful-restart
```

To disable graceful restart, use the commands:

```
awplus# configure terminal
awplus(config)# router bgp 10
awplus(config-router)# no bgp graceful-restart
```

To enable graceful restart and set the restart time to 150 seconds, use the commands:

```
awplus# configure terminal
awplus(config)# router bgp 10
awplus(config-router)# bgp graceful-restart restart-time 150
```

To return the restart-time to its default of 120 seconds, use the commands:

```
awplus# configure terminal
awplus(config)# router bgp 10
awplus(config-router)# no bgp graceful-restart restart-time
```

Related Commands

bgp graceful-restart graceful-reset

restart bgp graceful (BGP only)

bgp graceful-restart graceful-reset

Overview This command enables BGP and BGP4+ graceful-restart when a configuration change forces a peer restart.

Use the **no** variant of this command to restore the device to its default state.

Syntax

```
bgp graceful-restart graceful-reset
no bgp graceful-restart graceful-reset
```

Default Disabled

Mode Router Configuration

Usage The bgp graceful-restart command must be enabled before this command is enabled. All events that cause BGP peer reset, including all session reset commands, can trigger graceful-restart.

Example To enable the graceful-restart graceful-reset feature on the BGP or BGP4+ peer belonging to Autonomous System (AS) 10, use the commands:

```
awplus# configure terminal
awplus(config)# router bgp 10
awplus(config-router)# bgp graceful-restart graceful-reset
```

To disable the graceful-restart graceful-reset feature on the BGP or BGP4+ peer belonging to Autonomous System (AS) 10, use the commands:

```
awplus# configure terminal
awplus(config)# router bgp 10
awplus(config-router)# no bgp graceful-restart graceful-reset
```

Related Commands bgp graceful-restart

bgp log-neighbor-changes

Overview Use this command to enable logging of status change messages without turning on **debug bgp** commands.

Use the **no** variant of this command to disable this feature.

Syntax

```
bgp log-neighbor-changes
no bgp log-neighbor-changes
```

Default Disabled

Mode Router Configuration

Usage AlliedWare Plus™ provides other kinds of logging services for neighbor status, for example, **debug bgp fsm** and **debug bgp events**.

However, these commands create a significant hit in the logging performance. If you need to log neighbor status changes only, we recommend turning off all the debug commands, and then use this command.

To see BGP neighbor changes in the log you must also set the log level to informational using the **log buffered** command.

A sample output of this log is:

```
%Protocol-Severity-Events: Message-text
```

A sample output of the log for an interface down event is:

```
%BGP-5-ADJCHANGE: neighbor 10.10.0.24 Down Interface flap
```

The **bgp log-neighbor-changes** command logs the following events:

- BGP Notification Received
- Erroneous BGP Update Received
- User reset request
- Peer time-out
- Peer Closing down the session
- Interface flap
- Router ID changed
- Neighbor deleted
- Member added to peer group
- Administrative shutdown

- Remote AS changed
- RR client configuration modification
- Soft reconfiguration modification

Example To enable the logging of BGP status changes without using the debug bgp command:

```
awplus# configure terminal
awplus(config)# router bgp 100
awplus(config-router)# bgp log-neighbor-changes
```

bgp memory maxallocation

Overview This command allocates a maximum percentage of the RAM (Random Access Memory) available on the device for BGP processes.

When this percentage is exceeded, BGP peering terminates and an **out of resources** error displays. The default setting for **bgp memory maxallocation** is 100% memory allocation.

Use the **no** variant of this command to reset memory allocation to the default.

Syntax

```
bgp memory maxallocation <1-100>
no bgp memory maxallocation
```

Parameter	Description
<1-100>	Percentage of device memory allocated to BGP processes. Note this is RAM (Random Access Memory), not device flash memory.

Default BGP processes are allocated the maximum percentage of 100% of the device's available RAM memory by default. Note only non-default BGP memory allocation values are shown in the running or startup configuration files:

```
awplus#show running-config
!
bgp memory maxallocation 50
!
```

Mode Global Configuration

Examples To limit the maximum amount of memory used by BGP processes to 65% of the total RAM memory available on the device, use the commands:

```
awplus# configure terminal
awplus(config)# bgp memory maxallocation 65
```

To return to the default 100% maximum RAM memory allocation available on the device for BGP processes, use the commands:

```
awplus# configure terminal
awplus(config)# no bgp memory maxallocation
```

bgp nexthop-trigger-count

Overview Use this command to configure the display of BGP next hop tracking status.

Use the **no** variant of this command to disable this function.

Syntax

```
bgp nexthop-trigger-count <0-127>
no bgp nexthop-trigger-count
```

Parameter	Description
<0-127>	BGP next hop tracking status.

Mode Router Configuration

Example To enable next-hop-tracking status on the BGP peer belonging to the Autonomous System (AS) 100, enter the following commands:

```
awplus# configure terminal
awplus(config)# router bgp 100
awplus(config-router)# bgp nexthop-trigger-count 10
```

To disable next-hop-tracking status, enter the following commands:

```
awplus# configure terminal
awplus(config)# router bgp 100
awplus(config-router)# no bgp nexthop-trigger-count
```

Related Commands

bgp nexthop-trigger delay

bgp nexthop-trigger enable

show bgp nexthop-tracking (BGP only)

bgp nexthop-trigger delay

Overview Use this command to set the delay interval for next hop address tracking.

Use the **no** variant of this command to reset the timer value to the default.

Syntax

```
bgp nexthop-trigger delay <1-100>
no bgp nexthop-trigger delay
```

Parameter	Description
<1-100>	Next hop trigger delay interval in seconds.

Default The default next hop delay interval is 5 seconds.

Mode Global Configuration

Usage This command configures the delay interval between routing table waits for next hop delay tracking. The delay interval determines how long BGP waits after it receives the trigger from the system about one or more next hop changes before it walks the full BGP table to determine which prefixes are affected by the next hop changes.

Example To set the next hop delay interval to 6 seconds, enter the command:

```
awplus# configure terminal
awplus(config)# bgp nexthop-trigger delay 6
```

Related Commands

bgp nexthop-trigger-count

bgp nexthop-trigger enable

bgp nexthop-trigger enable

Overview Use this command to enable next hop address tracking. If next hop address tracking is enabled and a next hop trigger delay interval has not been explicitly set with the bgp nexthop-trigger delay command, the default delay interval of 5 seconds is used.

Use the **no** variant of this command to disable this feature.

Syntax
```
bgp nexthop-trigger enable
no bgp nexthop-trigger enable
```

Default Disabled.

Mode Global Configuration

Usage Next hop address tracking is an event driven notification system that monitors the status of routes installed in the Routing Information Base (RIB) and reports next hop changes that affect internal BGP (iBGP) or external BGP (eBGP) prefixes directly to the BGP process. This improves the overall BGP convergence time, by allowing BGP to respond rapidly to next hop changes for routes installed in the RIB.

If next hop tracking is enabled after certain routes are learned, the registration of all the next hops of selected BGP routes are done immediately after the next hop tracking feature is enabled.

If next hop tracking is disabled, and if there are still some selected BGP routes, BGP deregisters the next hops of all of the selected BGP routes from the system.

If next hop tracking is disabled when next hop tracking is in the process of execution, an error appears, and next hop tracking is not disabled. However, if the next hop tracking timer is running at the time of negation, the next hop tracking timer is stopped, and next hop tracking is disabled.

Example To enable next hop address tracking, enter the command:

```
awplus# configure terminal
awplus(config)# bgp nexthop-trigger enable
```

Related Commands
bgp nexthop-trigger-count

bgp nexthop-trigger delay

show bgp nexthop-tracking (BGP only)

bgp rfc1771-path-select (BGP only)

Overview Use this command to set the RFC1771 compatible path selection mechanism.

Use the **no** variant of this command to revert this setting.

Syntax

```
bgp rfc1771-path-select
no bgp rfc1771-path-select
```

Default Industry standard compatible path selection mechanism.

Mode Global Configuration

Example

```
awplus# configure terminal
awplus(config)# bgp rfc1771-path-select
```

bgp rfc1771-strict (BGP only)

Overview Use this command to set the Strict RFC1771 setting.

Use the **no** variant of this command to revert this setting.

Syntax
```
bgp rfc1771-strict
no bgp rfc1771-strict
```

Default Disabled

Mode Global Configuration

Example
```
awplus# configure terminal
awplus(config)# bgp rfc1771-strict
```

bgp router-id

Overview Use this command to configure the router identifier. The IPv4 address specified in this command does not have to be an IPv4 address that is configured on any of the interfaces on the device. Note that you must specify an IPv4 address with this when used for BGP4+.

Use the **no** variant of this command to return the router-id to its default value (as described in Default below).

Syntax

```
bgp router-id <routerid>
no bgp router-id [<routerid>]
```

Parameter	Description
<routerid>	Specify the IPv4 address without mask for a manually configured router ID, in the format `A.B.C.D`.

Default If the BGP router ID is not specified, the IPv4 address of the loopback interface is used. When there is no address on the loopback interface, the highest IP address among the VLAN interfaces is used. Note that devices that have an Ethernet management interface will not use that eth interface's IP address as a router ID.

Mode [BGP] Router Configuration or IPv4 Address Family Configuration

Mode [BGP4+] Router Configuration

Usage Use the **bgp router-id** command to manually configure a fixed router ID as a BGP or BGP4+ router identifier. This router ID takes precedence over all other possible router ID sources. The order of precedence is:

1) router ID configured with this command
2) IP address of the loopback interface
3) highest IP address from the VLAN interfaces

Examples To configure a router ID with an IPv4 address for a BGP or BGP4+ router identifier, enter the commands listed below:

```
awplus# configure terminal
awplus(config)# router bgp 100
awplus(config-router)# bgp router-id 1.1.2.3
```

To disable the router ID for a BGP or BGP4+ router identifier enter the commands listed below:

```
awplus# configure terminal
awplus(config)# router bgp 100
awplus(config-router)# no bgp router-id
```

bgp scan-time (BGP only)

Overview Use this command to set the interval for BGP route next-hop scanning.

Use the **no** variant of this command to disable this function.

Syntax

```
bgp scan-time <time>
no bgp scan-time [<time>]
```

Parameter	Description
<time>	<0-60> Scanning interval in seconds.

Default The default scanning interval is 60 seconds.

Mode Router Configuration

Usage Use this command to configure scanning intervals of BGP routers. This interval is the period after which router checks the validity of the routes in its database.

To disable BGP scanning, set the scan time interval to 0 seconds.

Example

```
awplus# configure terminal
awplus(config)# router bgp 100
awplus(config-router)# bgp scan-time 10
```

bgp update-delay

Overview Use this command to specify the update-delay value for a graceful-restart capable router.

Use the **no** variant of this command to revert to the default update-delay value.

Syntax

```
bgp update-delay <1-3600>
no bgp update-delay [<1-3600>]
```

Parameter	Description
<1-3600>	Delay value in seconds.

Default The default update-delay value is 120 seconds.

Mode Router Configuration

Usage The update-delay value is the maximum time a graceful-restart capable router which is restarting will defer route-selection and advertisements to all its graceful-restart capable neighbors. This maximum time starts from the instance the first neighbor attains established state after restart. The restarting router prematurely terminates this timer when end-of-rib markers are received from all its graceful-restart capable neighbors.

Example

```
awplus# configure terminal
awplus(config)# router bgp 10
awplus(config-router)# bgp update-delay 345
```

clear bgp *

Overview Use this command to reset the BGP and BGP4+ connections for all peers.

Syntax

```
clear bgp *
clear bgp * in [prefix-filter]
clear bgp * out
clear bgp * soft [in|out]
```

Parameter	Description
*	Clears all BGP and BGP4+ peers.
in	Indicates that incoming advertised routes will be cleared.
prefix-filter	Specifies that a prefix-list will be sent, by the ORF mechanism, to those neighbors with which the ORF capability has been negotiated. The neighbors will be triggered to resend updates, which match the prefix-list filter, to the local router. The local router will then perform a soft reconfiguration.
out	Indicates that outgoing advertised routes will be cleared.
soft in	Soft inbound reset causes the neighbors to resend all their updates to the local device, without resetting the connection or clearing the entries in the local device. So, the local device stores new updates, and uses them to systematically replace existing table entries. This process can use a considerable amount of memory.
soft out	Soft outbound reset causes the device to simply resend all its updates to the specified neighbor(s), without resetting the connection, or clearing table entries.

Mode Privileged Exec

Examples

```
awplus# clear bgp * soft in
awplus# clear bgp * in prefix-filter
```

clear bgp (IPv4 or IPv6 address)

Overview Use this command to reset the BGP and BGP4+ connections for specified peers.

When VRF-lite is configured, you can apply this command to a specific VRF instance. This command resets all BGP connections from any address family (from either IPv4 or IPv6 Address Families).

Syntax [BGP]

```
clear bgp <ip-addr>
clear bgp <ip-addr> in [prefix-filter]
clear bgp <ip-addr> out
clear bgp <ip-addr> soft [in|out]
```

Syntax (VRF-lite)

```
clear ip bgp <ip-addr> [vrf <vrf-name>] [in|out|soft [in|out]]
```

Syntax [BGP4+]

```
clear bgp <ipv6-addr>
clear bgp <ipv6-addr> in [prefix-filter]
clear bgp <ipv6-addr> out
clear bgp <ipv6-addr> soft [in|out]
```

Parameter	Description
<ip-addr>	Specifies the IPv4 address of the neighbor whose connection is to be reset, entered in the form A.B.C.D.
<ipv6-addr>	Specifies the IPv6 address of the neighbor whose connection is to be reset, entered in hexadecimal in the format X:X::X:X.
`in`	Indicates that incoming advertised routes will be cleared.
`prefix-filter`	Specifies that a prefix-list will be sent, by the ORF mechanism, to those neighbors with which the ORF capability has been negotiated. The neighbors will be triggered to resend updates, which match the prefix-list filter, to the local router. The local router will then perform a soft reconfiguration.
`out`	Indicates that outgoing advertised routes will be cleared.
`soft in`	Soft inbound reset causes the neighbors to resend all their updates to the local device, without resetting the connection or clearing the entries in the local device. So, the local device stores new updates, and uses them to systematically replace existing table entries. This process can use a considerable amount of memory.
`soft out`	Soft outbound reset causes the device to simply resend all its updates to the specified neighbor(s), without resetting the connection, or clearing table entries.
`vrf`	Applies the command to the specified VRF instance.
<vrf-name>	The name of the VRF instance.

Mode Privileged Exec

Examples [BGP]

```
awplus# clear bgp 3.3.3.3 soft in prefix-filter
awplus# clear bgp 2.2.2.2 out
```

Example (VRF-lite) To apply the above example to clear the BGP connection to peer at IP address 192.0.2.11 for the VRF instance blue, use the following commands:

```
awplus# clear bgp 192.0.2.11 vrf blue in
```

Examples [BGP4+]

```
awplus# clear bgp 2001:0db8:010d::1 soft in prefix-filter
awplus# clear bgp 2001:0db8:010d::1 out
```

Related Commands clear bgp (IPv4 or IPv6 address)

Command changes Version 5.4.6-2.1: VRF-lite support added.

clear bgp (ASN)

Overview Use this command to reset the BGP and BGP4+ connections for peers in the specified Autonomous System Number (ASN).

Syntax

```
clear bgp <asn> [in [prefix-filter]|out|soft [in|out]]
```

Parameter	Description
`<asn>`	`<1-4294967295>` The AS Number for which all routes will be cleared.
`in`	Indicates that incoming advertised routes will be cleared.
`prefix-filter`	Specifies that a prefix-list will be sent, by the ORF mechanism, to those neighbors with which the ORF capability has been negotiated. The neighbors will be triggered to resend updates, which match the prefix-list filter, to the local router. The local router will then perform a soft reconfiguration.
`out`	Indicates that outgoing advertised routes will be cleared.
`soft in`	Soft inbound reset causes the neighbors to resend all their updates to the local device, without resetting the connection or clearing the entries in the local device. So, the local device stores new updates, and uses them to systematically replace existing table entries. This process can use a considerable amount of memory.
`soft out`	Soft outbound reset causes the device to simply resend all its updates to the specified neighbor(s), without resetting the connection, or clearing table entries.

Mode Privileged Exec

Examples

```
awplus# clear bgp 300 soft in prefix-filter
awplus# clear bgp 500 soft out
awplus# clear bgp 300 soft in
awplus# clear bgp 1 in prefix-filter
```

clear bgp external

Overview Use this command to reset the BGP and BGP4+ connections for all external peers.

Syntax

```
clear bgp external [in [prefix-filter]|out|soft [in|out]]
```

Parameter	Description
`external`	Clears all external peers.
`in`	Indicates that incoming advertised routes will be cleared.
`prefix-filter`	Specifies that a prefix-list will be sent, by the ORF mechanism, to those neighbors with which the ORF capability has been negotiated. The neighbors will be triggered to resend updates, which match the prefix-list filter, to the local router. The local router will then perform a soft reconfiguration.
`out`	Indicates that outgoing advertised routes will be cleared.
`soft in`	Soft inbound reset causes the neighbors to resend all their updates to the local device, without resetting the connection or clearing the entries in the local device. So, the local device stores new updates, and uses them to systematically replace existing table entries. This process can use a considerable amount of memory.
`soft out`	Soft outbound reset causes the device to simply resend all its updates to the specified neighbor(s), without resetting the connection, or clearing table entries.

Mode Privileged Exec

Examples

```
awplus# clear bgp external soft in
awplus# clear bgp external in prefix-filter
```

clear bgp peer-group

Overview Use this command to reset the BGP and BGP4+ connections for all members of a peer group.

Syntax

```
clear bgp peer-group <peer-group> [in [prefix-filter]|out|soft
[in|out]]
```

Parameter	Description
`peer-group`	Clears all members of a peer group.
<peer-group>	Name of the BGP peer group
`in`	Indicates that incoming advertised routes will be cleared.
`prefix-filter`	Specifies that a prefix-list will be sent, by the ORF mechanism, to those neighbors with which the ORF capability has been negotiated. The neighbors will be triggered to resend updates, which match the prefix-list filter, to the local router. The local router will then perform a soft reconfiguration.
`out`	Indicates that outgoing advertised routes will be cleared.
`soft in`	Soft inbound reset causes the neighbors to resend all their updates to the local device, without resetting the connection or clearing the entries in the local device. So, the local device stores new updates, and uses them to systematically replace existing table entries. This process can use a considerable amount of memory.
`soft out`	Soft outbound reset causes the device to simply resend all its updates to the specified neighbor(s), without resetting the connection, or clearing table entries.

Mode Privileged Exec

Examples

```
awplus# clear bgp peer-group P1 soft in
awplus# clear bgp peer-group P2 in
```

clear ip bgp * (BGP only)

Overview Use this command to reset all BGP connections, either by fully resetting sessions or by performing soft resets.

If VRF-lite is configured, you can reset BGP connections for all VRF instances or for a specified VRF instance.

Syntax

```
clear ip bgp *
clear ip bgp * in
clear ip bgp * out
clear ip bgp * soft [in|out]
clear ip bgp * in [prefix-filter]
```

Syntax (VRF-lite)

```
clear ip bgp * [vrf <vrf-name>]
clear ip bgp * [vrf <vrf-name>] in
clear ip bgp * [vrf <vrf-name>] out
clear ip bgp * [vrf <vrf-name>] soft [in|out]
clear ip bgp * in [prefix-filter]
```

Parameter	Description
`*`	Clears all BGP peers.
`in`	Indicates that incoming advertised routes will be cleared.
`prefix-filter`	Specifies that a prefix-list will be sent, by the ORF mechanism, to those neighbors with which the ORF capability has been negotiated. The neighbors will be triggered to resend updates, which match the prefix-list filter, to the local router. The local router will then perform a soft reconfiguration.
`out`	Indicates that outgoing advertised routes will be cleared.
`soft in`	Soft inbound reset causes the neighbors to resend all their updates to the local device, without resetting the connection or clearing the entries in the local device. So, the local device stores new updates, and uses them to systematically replace existing table entries. This process can use a considerable amount of memory.
`soft out`	Soft outbound reset causes the device to simply resend all its updates to the specified neighbor(s), without resetting the connection, or clearing table entries.
`vrf`	Applies the command to the specified VRF instance.
`<vrf-name>`	The name of the VRF instance.

Mode Privileged Exec

Examples

To clear all BGP peers, use the command:

```
awplus# clear ip bgp *
```

Example (VRF-lite)

To clear all BGP peers in VRF instance red, use the command:

```
awplus# clear ip bgp * vrf red
```

To clear all outbound BGP peers in VRF instance red, use the command:

```
awplus# clear ip bgp * out vrf red
```

Command changes

Version 5.4.6-2.1: VRF-lite support added.

clear ip bgp (IPv4) (BGP only)

Overview Use this command to reset the IPv4 BGP connection to the peer specified by the IP address. When VRF-lite is configured, you can apply this command to a specific VRF instance.

Syntax [BGP]

```
clear ip bgp <ipv4-addr> [in [prefix-filter]|out|soft [in|out]]
```

Syntax (VRF-lite)

```
clear ip bgp <ipv4-address> [vrf <vrf-name>] [in|out|soft
[in|out]]
```

Parameter	Description
<ipv4-addr>	Specifies the IPv4 address of the neighbor whose connection is to be reset, entered in the form A.B.C.D.
`in`	Indicates that incoming advertised routes will be cleared.
`prefix-filter`	Specifies that a prefix-list will be sent, by the ORF mechanism, to those neighbors with which the ORF capability has been negotiated. The neighbors will be triggered to resend updates, which match the prefix-list filter, to the local router. The local router will then perform a soft reconfiguration.
`out`	Indicates that outgoing advertised routes will be cleared.
`soft in`	Soft inbound reset causes the neighbors to resend all their updates to the local switch, without resetting the connection or clearing the entries in the local switch. So, the local switch stores new updates, and uses them to systematically replace existing table entries. This process can use a considerable amount of memory.
`soft out`	Soft outbound reset causes the switch to simply resend all its updates to the specified neighbor(s), without resetting the connection, or clearing table entries.
`vrf`	Applies the command to the specified VRF instance.
<vrf-name>	The name of the VRF instance.

Mode [BGP] Privileged Exec

Examples [BGP] To clear the BGP connection to peer at IPv4 address 192.168.1.1 and clear all incoming routes, use the following command:

```
awplus# clear ip bgp 192.168.1.1 in
```

To apply the above example to clear the BGP connection to the peer at IP address 192.0.2.11 for the VRF instance blue, use the following commands:

```
awplus# clear ip bgp 192.0.2.11 vrf blue in
```

Command changes Version 5.4.6-2.1: VRF-lite support added.

clear ip bgp dampening (BGP only)

Overview Use this command to clear route dampening information and unsuppress routes that have been suppressed.

Syntax

```
clear ip bgp dampening [<ip-address>|<ip-address/m>]
```

Parameter	Description
<ip-address>	Specifies the IPv4 address for which BGP dampening is to be cleared, in dotted decimal format.
<ip-address/m>	Specifies the IPv4 address with mask for which BGP dampening is to be cleared, entered in the form A.B.C.D/M. Where M is the subnet mask
`ipv4`	Clears all IPv4 address family peers. Configure parameters relating to the BGP exchange of IPv4 prefixes.

Mode Privileged Exec

Examples

```
awplus# clear ip bgp dampening 10.10.0.121
```

clear ip bgp flap-statistics (BGP only)

Overview Use this command to clear the flap count and history duration for the specified prefixes.

Syntax
```
clear ip bgp flap-statistics [<ip-address>|<ip-address/m>]
```

Parameter	Description
<ip-address>	Specifies the IPv4 address for which BGP flap count and history duration are to be cleared.
<ip-address/m>	Specifies the IPv4 address with mask for which BGP flap count and history duration are to be cleared.
ipv4	Clears all IPv4 address family peers. Configure parameters relating to the BGP exchange of IPv4 prefixes.

Mode Privileged Exec

Examples
```
awplus# clear ip bgp flap-statistics 10.10.0.121
```

clear ip bgp (ASN) (BGP only)

Overview Use this command to reset the BGP connections to all peers in a specified Autonomous System Number (ASN).

Syntax

```
clear ip bgp <asn> [in [prefix-filter]|out|soft [in|out]]
clear ip bgp <asn> ipv4
clear ip bgp <asn> ipv4 in [prefix-filter]
clear ip bgp <asn> ipv4 out
clear ip bgp <asn> ipv4 soft [in|out]
```

Parameter	Description
<asn>	<1-4294967295> Specifies the ASN for which all routes will be cleared.
ipv4	Clears all IPv4 address family peers. Configure parameters relating to the BGP exchange of IPv4 prefixes.
in	Indicates that incoming advertised routes will be cleared.
prefix-filter	Specifies that a prefix-list will be sent, by the ORF mechanism, to those neighbors with which the ORF capability has been negotiated. The neighbors will be triggered to resend updates, which match the prefix-list filter, to the local router. The local router will then perform a soft reconfiguration.
out	Indicates that outgoing advertised routes will be cleared.
soft in	Soft inbound reset causes the neighbors to resend all their updates to the local device, without resetting the connection or clearing the entries in the local device. So, the local device stores new updates, and uses them to systematically replace existing table entries. This process can use a considerable amount of memory.
soft out	Soft outbound reset causes the device to simply resend all its updates to the specified neighbor(s), without resetting the connection, or clearing table entries.

Mode Privileged Exec

Examples

```
awplus# clear ip bgp 100
```

clear ip bgp external (BGP only)

Overview Use this command to reset the BGP connections to all external peers.

Syntax

```
clear ip bgp external [in [prefix-filter]|out|soft [in|out]]
clear ip bgp external
clear ip bgp external in [prefix-filter]
clear ip bgp external out
clear ip bgp external soft [in|out]
```

Parameter	Description
`external`	Clears all external peers.
`ipv4`	Clears all IPv4 address family peers. Configure parameters relating to the BGP exchange of IPv4 prefixes.
`in`	Indicates that incoming advertised routes will be cleared.
`prefix-filter`	Specifies that a prefix-list will be sent, by the ORF mechanism, to those neighbors with which the ORF capability has been negotiated. The neighbors will be triggered to resend updates, which match the prefix-list filter, to the local router. The local router will then perform a soft reconfiguration.
`out`	Indicates that outgoing advertised routes will be cleared.
`soft in`	Soft inbound reset causes the neighbors to resend all their updates to the local device, without resetting the connection or clearing the entries in the local device. So, the local device stores new updates, and uses them to systematically replace existing table entries. This process can use a considerable amount of memory.
`soft out`	Soft outbound reset causes the device to simply resend all its updates to the specified neighbor(s), without resetting the connection, or clearing table entries.

Mode Privileged Exec

Examples

```
awplus# clear ip bgp external out
```

clear ip bgp peer-group (BGP only)

Overview Use this command to reset the BGP connections to all members of a peer group.

Syntax

```
clear ip bgp peer-group <peer-name>
clear ip bgp peer-group <peer-name> in [prefix-filter]
clear ip bgp peer-group <peer-name> out
clear ip bgp peer-group <peer-name> soft [in|out]
clear ip bgp peer-group <peer-name> out
clear ip bgp peer-group <peer-name> soft [in|out]
```

Parameter	Description
`peer-group`	Clears all members of a peer group.
<peer-name>	Specifies the name of the peer group for which all members will be cleared.
`ipv4`	Clears all IPv4 address family peers. Configure parameters relating to the BGP exchange of IPv4 prefixes.
`in`	Indicates that incoming advertised routes will be cleared.
`prefix-filter`	Specifies that a prefix-list will be sent, by the ORF mechanism, to those neighbors with which the ORF capability has been negotiated. The neighbors will be triggered to resend updates, which match the prefix-list filter, to the local router. The local router will then perform a soft reconfiguration.
`out`	Indicates that outgoing advertised routes will be cleared.
`soft in`	Soft inbound reset causes the neighbors to resend all their updates to the local device, without resetting the connection or clearing the entries in the local device. So, the local device stores new updates, and uses them to systematically replace existing table entries. This process can use a considerable amount of memory.
`soft out`	Soft outbound reset causes the device to simply resend all its updates to the specified neighbor(s), without resetting the connection, or clearing table entries.

Mode Privileged Exec

Examples

```
awplus# clear ip bgp peer-group Peer1 out
```

clear bgp ipv6 (ipv6 address) (BGP4+ only)

Overview Use this command to reset the IPv6 BGP4+ connection to the peer specified by the IP address.

Syntax

```
clear bgp ipv6 <ipv6-addr> [in [prefix-filter]|out|soft
[in|out]]
```

Parameter	Description
<ipv6-addr>	Specifies the IPv6 address of the neighbor whose connection is to be reset, entered in hexadecimal in the format X:X::X:X.
ipv6	Clears all IPv6 address family peers. Configure parameters relating to the BGP4+ exchange of IPv6 prefixes.
in	Indicates that incoming advertised routes will be cleared.
prefix-filter	Specifies that a prefix-list will be sent, by the ORF mechanism, to those neighbors with which the ORF capability has been negotiated. The neighbors will be triggered to resend updates, which match the prefix-list filter, to the local router. The local router will then perform a soft reconfiguration.
out	Indicates that outgoing advertised routes will be cleared.
soft in	Soft inbound reset causes the neighbors to resend all their updates to the local device, without resetting the connection or clearing the entries in the local device. So, the local device stores new updates, and uses them to systematically replace existing table entries. This process can use a considerable amount of memory.
soft out	Soft outbound reset causes the device to simply resend all its updates to the specified neighbor(s), without resetting the connection, or clearing table entries.

Mode Privileged Exec

Examples Use the following command to clear the BGP4+ connection to peer at IPv6 address 2001:0db8:010d::1, and clearing all incoming routes.

```
awplus# clear ip bgp 2001:0db8:010d::1 in
```

clear bgp ipv6 dampening (BGP4+ only)

Overview Use this command to clear route dampening information and unsuppress routes that have been suppressed routes.

Syntax

```
clear bgp ipv6 dampening
[<ipv6-addr>|<ipv6-addr/prefix-length>]
```

Parameter	Description
<ipv6-addr>	Specifies the IPv6 address for which BGP4+ dampening is to be cleared, entered in hexadecimal in the format X:X::X:X.
<ipv6-addr/prefix-length>	Specifies the IPv6 address and prefix-length for which BGP4+ dampening is to be cleared. The IPv6 address uses the format X:X::X:X/Prefix-Length. The prefix-length is usually set between 0 and 64.

Mode Privileged Exec

Examples

```
awplus# clear bgp ipv6 dampening 2001:0db8:010d::1
awplus# clear bgp ipv6 dampening 2001:0db8::/64
```

clear bgp ipv6 flap-statistics (BGP4+ only)

Overview Use this command to clear the flap count and history duration for the specified prefixes.

Syntax
```
clear bgp ipv6 flap-statistics
[<ipv6-addr>|<ipv6-addr/prefix-length>]
```

Parameter	Description
<ipv6-addr>	Specifies the IPv6 address for which BGP4+ flap count and history duration are to be cleared, entered in hexadecimal in the format X:X::X:X.
<ipv6-addr/prefix-length>	Specifies the IPv6 address with prefix length for which BGP4+ flap count and history duration are to be cleared. The IPv6 address uses the format X:X::X:X/Prefix-Length. The prefix-length is usually set between 0 and 64.

Mode Privileged Exec

Examples
```
awplus# clear bgp ipv6 flap-statistics 2001:0db8:010d::1
awplus# clear bgp ipv6 flap-statistics 2001:0db8::/64
```

clear bgp ipv6 (ASN) (BGP4+ only)

Overview Use this command to reset the BGP4+ connections to all peers in a specified Autonomous System Number (ASN).

Syntax

```
clear bgp ipv6 <asn> [in [prefix-filter]|out|soft [in|out]]
clear bgp ipv6 <asn>
clear bgp ipv6 <asn> in [prefix-filter]
clear bgp ipv6 <asn> out
clear bgp ipv6 <asn> soft [in|out]
```

Parameter	Description
<asn>	<1-4294967295> Specifies the ASN for which all routes will be cleared.
`in`	Indicates that incoming advertised routes will be cleared.
`prefix-filter`	Specifies that a prefix-list will be sent, by the ORF mechanism, to those neighbors with which the ORF capability has been negotiated. The neighbors will be triggered to resend updates, which match the prefix-list filter, to the local router. The local router will then perform a soft reconfiguration.
`out`	Indicates that outgoing advertised routes will be cleared.
`soft in`	Soft inbound reset causes the neighbors to resend all their updates to the local device, without resetting the connection or clearing the entries in the local device. So, the local device stores new updates, and uses them to systematically replace existing table entries. This process can use a considerable amount of memory.
`soft out`	Soft outbound reset causes the device to simply resend all its updates to the specified neighbor(s), without resetting the connection, or clearing table entries.

Mode Privileged Exec

Examples

```
awplus# clear bgp ipv6 100
awplus# clear bgp ipv6 100 in
awplus# clear bgp ipv6 100 in prefix-filter
awplus# clear bgp ipv6 100 out
awplus# clear bgp ipv6 100 soft out
awplus# clear bgp ipv6 100 soft in
```

clear bgp ipv6 external (BGP4+ only)

Overview Use this command to reset the BGP4+ connections to all external peers.

Syntax

```
clear bgp ipv6 external [in [prefix-filter]|out|soft [in|out]]
clear bgp ipv6 external
clear bgp ipv6 external in [prefix-filter]
clear bgp ipv6 external out
clear bgp ipv6 external soft [in|out]
```

Parameter	Description
`external`	Clears all external peers.
`in`	Indicates that incoming advertised routes will be cleared.
`prefix-filter`	Specifies that a prefix-list will be sent, by the ORF mechanism, to those neighbors with which the ORF capability has been negotiated. The neighbors will be triggered to resend updates, which match the prefix-list filter, to the local router. The local router will then perform a soft reconfiguration.
`out`	Indicates that outgoing advertised routes will be cleared.
`soft in`	Soft inbound reset causes the neighbors to resend all their updates to the local device, without resetting the connection or clearing the entries in the local device. So, the local device stores new updates, and uses them to systematically replace existing table entries. This process can use a considerable amount of memory.
`soft out`	Soft outbound reset causes the device to simply resend all its updates to the specified neighbor(s), without resetting the connection, or clearing table entries.

Mode Privileged Exec

Examples

```
awplus# clear bgp ipv6 external in
awplus# clear bgp ipv6 external in prefix
awplus# clear bgp ipv6 external out
awplus# clear bgp ipv6 external soft out
awplus# clear bgp ipv6 external soft in
```

clear bgp ipv6 peer-group (BGP4+ only)

Overview Use this command to reset the BGP4+ connections to all members of a peer group.

Syntax

```
clear bgp ipv6 peer-group <peer-name>
clear bgp ipv6 peer-group <peer-name> in [prefix-filter]
clear bgp ipv6 peer-group <peer-name> out
clear bgp ipv6 peer-group <peer-name> soft [in|out]
```

Parameter	Description
`peer-group`	Clears all members of a peer group.
<peer-name>	Specifies the name of the peer group for which all members will be cleared.
`ipv6`	Clears all IPv6 address family peers. Configure parameters relating to the BGP4+ exchange of IPv6 prefixes.
`in`	Indicates that incoming advertised routes will be cleared.
`prefix-filter`	Specifies that a prefix-list will be sent, by the ORF mechanism, to those neighbors with which the ORF capability has been negotiated. The neighbors will be triggered to resend updates, which match the prefix-list filter, to the local router. The local router will then perform a soft reconfiguration.
`out`	Indicates that outgoing advertised routes will be cleared.
`soft in`	Soft inbound reset causes the neighbors to resend all their updates to the local device, without resetting the connection or clearing the entries in the local device. So, the local device stores new updates, and uses them to systematically replace existing table entries. This process can use a considerable amount of memory.
`soft out`	Soft outbound reset causes the device to simply resend all its updates to the specified neighbor(s), without resetting the connection, or clearing table entries.

Mode Privileged Exec

Example

```
awplus# clear bgp ipv6 peer-group Peer1 out
```

debug bgp (BGP only)

Overview Use this command to turn on one or more BGP debug options.

Use the **no** variant of this command to disable one or more BGP debug options.

Syntax

```
debug bgp
[all|dampening|events|filters|fsm|keepalives|nht|nsm|updates
[in|out]]
```

```
no debug all bgp
```

```
no debug bgp
[all|dampening|events|filters|fsm|keepalives|nht|nsm|updates
[in|out]]
```

Parameter	Description
`all`	Turns on all debugging for BGP.
`dampening`	Specifies debugging for BGP dampening.
`events`	Specifies debugging for BGP events.
`filters`	Specifies debugging for BGP filters.
`fsm`	Specifies debugging for BGP Finite State Machine (FSM).
`keepalives`	Specifies debugging for BGP keepalives.
`nht`	Specifies debugging for BGP NHT (Next Hop Tracking) messages.
`nsm`	Specifies debugging for NSM messages.
`updates`	`[in|out]` Specifies debugging for BGP updates.
`in`	Inbound updates.
`out`	Outbound updates.

Mode Privileged Exec and Global Configuration

Usage If the command is entered with no parameters, then all debug options are enabled.

Examples

```
awplus# debug bgp
awplus# debug bgp events
awplus# debug bgp nht
awplus# debug bgp updates in
```

Related Commands show debugging bgp (BGP only)

undebug bgp (BGP only)

distance (BGP and BGP4+)

Overview This command sets the administrative distance for BGP and BGP4+ routes. The device uses this value to select between two or more routes to the same destination from two different routing protocols. Set the administrative distance for BGP routes in the Router Configuration mode, and for BGP4+ routes in IPv6 Address Family Configuration mode.

The route with the smallest administrative distance value is added to the Forwarding Information Base (FIB). For more information, see the Route Selection Feature Overview and Configuration Guide, which is available from the above link at alliedtelesis.com.

The **no** variant of this command sets the administrative distance for the route to the default for the route type.

Syntax

```
distance <1-255> <ip-address/m>
distance bgp <ebgp> <ibgp> <local>
no distance <1-255> <ip-address/m>
no distance bgp <ebgp> <ibgp> <local>
```

Parameter	Description
<1-255>	The administrative distance value you are setting for the route.
<ip-address/m>	The IP source prefix that you are changing the administrative distance for, entered in the form `A.B.C.D/M`. This is an IPv4 address in dotted decimal notation followed by a forward slash, and then the prefix length.
<ebgp>	Specifies the administrative distance of external BGP (eBGP) routes. These are routes learned from a neighbor out of the AS. Specify the distance as a number between 1 and 255. Default: **20**
<ibgp>	Specifies the administrative distance of internal BGP (iBGP) routes. These are routes learned from a neighbor within the same AS. Specify the distance as a number between 1 and 255. Default: **200**
<local>	Specifies the administrative distance of local BGP routes. These are routes redistributed from another protocol within your device. Specify the distance as a number between 1 and 255. Default: **200**

Mode [BGP] Router Configuration

Mode [BGP4+] IPv6 Address Family Configuration

Usage You can use this command to set the administrative distance:

- for each BGP route type by specifying:

```
awplus(config-router)# distance <ebgp> <igbp> <local>
```

- for a specific route by specifying:

```
awplus(config-router)# distance <1-255> <ip-address/m>
[<listname>]
```

If the administrative distance is changed, it could create inconsistency in the routing table and obstruct routing.

Example [BGP4+] For BGP4+ IPv6, to set BGP 100's administrative distances for eBGP routes to 34, iBGP routes to 23, and local BGP routes to 15, use the commands:

```
awplus# configure terminal
awplus(config)# router bgp 100
awplus(config-router)# address-family ipv6
awplus(config-router-af)# distance bgp 34 23 15
```

exit-address-family

Overview Use this command to exit either the IPv4 or the IPv6 Address Family Configuration mode.

Syntax
```
exit-address-family
```

Mode [BGP] IPv4 Address Family Configuration

Mode [BGP4+] IPv6 Address Family Configuration

Examples [BGP] To enter and then exit IPv4 Address Family Configuration mode, use the commands:

```
awplus# configure terminal
awplus(config)# router bgp 100
awplus(config-router)# address-family ipv4
awplus(config-router-af)# exit-address-family
awplus(config-router)#
```

Example (VRF-lite) To enter and then exit IPv4 Address Family Configuration mode for VRF instance red, use the commands:

```
awplus# configure terminal
awplus(config)# router bgp 100
awplus(config-router)# address-family ipv4 vrf red
awplus(config-router-af)# exit-address-family
awplus(config-router)#
```

Example [BGP4+] To enter and then exit IPv6 Address Family Configuration mode, use the commands:

```
awplus# configure terminal
awplus(config)# router bgp 100
awplus(config-router)# address-family ipv6
awplus(config-router-af)# exit-address-family
awplus(config-router)#
```

Related Commands address-family

Command changes Version 5.4.6-2.1: VRF-lite support added.

ip community-list

Overview Use this command to add an entry to a standard or extended BGP community-list filter.

Use the **no** variant of this command to delete a standard or extended community list entry.

Syntax

```
ip community-list <listname> {deny|permit} .<community>
no ip community-list <listname> {deny|permit} .<community>
```

Parameter	Description
<listname>	Specifies the community listname.
deny	Specifies the community to reject.
permit	Specifies the community to accept.
.*<community>*	{<AS:VAL>|local-AS|no-advertise|no-export}
<AS:VAL>	Specifies the valid value for the community number. This format represents the 32 bit communities value, where AS is the high order 16 bits and VAL is the low order 16 bits in digit format.
local-AS	Specifies routes not to be advertised to external BGP peers.
no-advertise	Specifies routes not to be advertised to other BGP peers.
no-export	Specifies routes not to be advertised outside of Autonomous System boundary.

Mode Global Configuration

Usage A community-list can be used as a filter to BGP updates. Use this command to define the community access list globally, then use neighbor configuration commands to apply the list to a particular neighbor.

There are two kinds of community-lists: expanded and standard. A standard community- list defines the community attributes explicitly and not via a regular expression. An expanded community-list defines the communities attributes with regular expressions.

The standard community-list is compiled into binary format and is directly compared with the BGP communities attribute in the BGP updates. The comparison is faster than the expanded community-list. Any community value that does not match the standard community value is automatically treated as expanded.

Example

```
awplus# configure terminal
awplus(config)# ip community-list mylist permit 7675:80 7675:90
```

Related Commands

ip community-list standard

ip community-list expanded

show ip community-list

ip community-list expanded

Overview Use this command to add an entry to an expanded BGP community-list filter.

Use the **no** variant of this command to delete the community list entry.

Syntax

```
ip community-list <100-199> {deny|permit} .<line>
no ip community-list <100-199> {deny|permit} .<line>
ip community-list expanded <expanded-listname> {deny|permit}
.<line>
no ip community-list expanded <expanded-listname> {deny|permit}
.<line>
```

Parameter	Description
<100-199>	Expanded community list number.
expanded	Specifies an expanded community list.
<expanded-listname>	Expanded community list entry.
deny	Specifies community to reject.
permit	Specifies community to accept.
.*<line>*	Specifies community attributes with regular expressions.

Regular expressions listed below can be used with the **ip community-list expanded** command:

Symbol	Character	Meaning
^	Caret	Used to match the beginning of the input string. When used at the beginning of a string of characters, it negates a pattern match.
$	Dollar sign	Used to match the end of the input string.
.	Period	Used to match a single character (white spaces included).
*	Asterisk	Used to match none or more sequences of a pattern.
+	Plus sign	Used to match one or more sequences of a pattern.
?	Question mark	Used to match none or one occurrence of a pattern.
_	Underscore	Used to match spaces, commas, braces, parenthesis, or the beginning and end of an input string.
[ ]	Brackets	Specifies a range of single-characters.
-	Hyphen	Separates the end points of a range.

Mode Global Configuration

Usage A `community-list` can be used as a filter to BGP updates. Use this command to define the community access list globally, then use **neighbor** configuration commands to apply the list to a particular neighbor.

There are two kinds of community-lists: expanded and standard. A standard community- list defines the community attributes explicitly and not via a regular expression. An expanded community-list defines the communities attributes with regular expressions.

The standard community-list is compiled into binary format and is directly compared with the BGP communities attribute in the BGP updates. The comparison is faster than the expanded community-list. Any community value that does not match the standard community value is automatically treated as expanded.

Examples

```
awplus# configure terminal
awplus(config)# ip community-list 125 permit 6789906
awplus(config)# ip community-list expanded CLIST permit .*
```

Related Commands

ip community-list

ip community-list standard

show ip community-list

ip community-list standard

Overview Use this command to add an entry to a standard BGP community-list filter.

Use the **no** variant of this command to delete the standard community-list entry.

Syntax

```
ip community-list <1-99> {deny|permit} [.<community>]
no ip community-list <1-99> {deny|permit} [.<community>]
ip community-list standard <standard-listname> {deny|permit}
[.<community>]
no ip community-list standard <standard-listname> {deny|permit}
[.<community>]
```

Parameter	Description
<1-99>	Standard community list number.
`standard`	Specifies a standard community list.
<standard-listname>	Standard community list entry.
`deny`	Specifies community to reject.
`permit`	Specifies community to accept.
<community>	{*<AS:VAL>*| local-AS | no-advertise | no-export}
<AS:VAL>	Specifies the valid value for the community number. This format represents the 32 bit communities value, where `AS` is the high order 16 bits and `VAL` is the low order 16 bits in digit format.
`local-AS`	Specifies routes not to be advertised to external BGP peers.
`no-advertise`	Specifies routes not to be advertised to other BGP peers.
`no-export`	Specifies routes not to be advertised outside of the Autonomous System boundary.

Mode Global Configuration

Usage A community-list can be used as a filter to BGP updates. Use this command to define the community access list globally, then use neighbor configuration commands to apply the list to a particular neighbor.

There are two kinds of community-lists: expanded and standard. The standard community-list defines the community attributes as explicit values, without regular expressions. The expanded community-list defines the communities attributes with regular expressions.

The standard community-list is compiled into binary format and is directly compared with the BGP communities attribute in the BGP updates. The comparison is faster than the expanded community-list. Any community value

that does not match the standard community value is automatically treated as expanded.

Examples

```
awplus# configure terminal
awplus(config)# ip community-list standard CLIST permit 7675:80
7675:90 no-export
awplus(config)# ip community-list 34 permit 5675:50
no-advertise
```

Related Commands

ip community-list

ip community-list expanded

show ip community-list

ip extcommunity-list expanded

Overview Use this command to create or delete an expanded extended community list.

Use the **no** variant of this command to delete the expanded extended community-list entry.

Syntax

```
ip extcommunity-list <100-199> {deny|permit}
{.<line>|.<AS:NN>|.<ip-address>}

no ip extcommunity-list <100-199> {deny|permit}
{.<line>|.<AS:NN>|.<ip-address>}

ip extcommunity-list expanded <expanded-listname> {deny|permit}
{.<line>|.<AS:NN>|.<ip-address>}

no ip extcommunity-list expanded <expanded-listname>
{deny|permit} {.<line>|.<AS:NN>|.<ip-address>}

no ip extcommunity-list <100-199>

no ip extcommunity-list expanded <expanded-listname>
```

Parameter	Description
<100-199>	Expanded extcommunity list number.
expanded	Specifies an expanded extcommunity list.
<expanded-listname>	Expanded extcommunity list entry.
deny	Specifies the extcommunity to reject.
permit	Specifies the extcommunity to accept.
.<line>	Specifies extcommunity attributes with regular expression.
<AS:NN>	Specifies the valid value for an extcommunity number. This format represents the 32 bit extcommunities value, where AA is the high order 16 bits and NN is the low order 16 bits in digit format.
<ip-address>	Specifies the IP address to deny or permit.

Regular expressions listed below are used with the **ip extcommunity-list expanded** command:

Symbol	Character	Meaning
^	Caret	Used to match the beginning of the input string. When used at the beginning of a string of characters, it negates a pattern match.
$	Dollar sign	Used to match the end of the input string.

Symbol	Character	Meaning
.	Period	Used to match a single character (white spaces included).
*	Asterisk	Used to match none or more sequences of a pattern.
+	Plus sign	Used to match one or more sequences of a pattern.
?	Question mark	Used to match none or one occurrence of a pattern.
_	Underscore	Used to match spaces, commas, braces, parenthesis, or the beginning and end of an input string.
[ ]	Brackets	Specifies a range of single-characters.
-	Hyphen	Separates the end points of a range.

Mode Global Configuration

Examples

```
awplus# configure terminal
awplus(config)# ip extcommunity-list 125 permit 4567335
awplus(config)# ip extcommunity-list expanded CLIST permit .*
```

Related Commands

ip extcommunity-list standard

show ip extcommunity-list

ip extcommunity-list standard

Overview Use this command to create and delete a standard extended community list.

Use the **no** variant of this command to delete a standard extended community-list entry.

Syntax

```
ip extcommunity-list <1-99> {deny|permit} {rt|soo}
<community-number>
```

```
ip extcommunity-list standard <standard-listname> {deny|permit}
{rt|soo} <community-number>
```

```
no ip extcommunity-list <1-99> [{deny|permit} {rt|soo}
<community-number>]
```

```
no ip extcommunity-list standard <standard-listname>
[{deny|permit} {rt|soo} <community-number>]
```

Parameter	Description
<1-99>	Standard extcommunity list number.
standard	Specifies a standard extended community list.
<standard-listname>	Standard extended community list entry.
deny	Specifies the extended community to reject.
permit	Specifies the extended community to accept.
rt	Specifies the route target of the extended community.
soo	Specifies the site of origin of the extended community.
<community-number>	Specifies the valid value for an extended community number. This can be one of two formats: • <ASN:NN> where *ASN* is an AS (Autonomous System) number and *NN* is a value chosen by the ASN administrator • <A.B.C.D:NN> where *A.B.C.D* is an IPv4 address, and *NN* is a value chosen by the ASN administrator. Note that *ASN* and *NN* are both integers from 1 to 4294967295. AS numbers are assigned to the regional registries by IANA (www.iana.org) and must be obtained in your region.

Mode Global Configuration

Examples

```
awplus# configure terminal
awplus(config)# ip extcommunity-list 36 permit rt 5675:50
awplus(config)# ip extcommunity-list standard CLIST permit soo 7645:70
awplus# configure terminal
awplus(config)# ip extcommunity-list 36 deny rt 192.168.1.1:70
awplus(config)# ip extcommunity-list standard CLIST deny soo 10.10.1.1:50
```

Related Commands

ip extcommunity-list expanded

show ip extcommunity-list

ip prefix-list (IPv4 Prefix List)

Overview Use this command to create an entry for an IPv4 prefix list.

Use the **no** variant of this command to delete the IPv4 prefix-list entry.

Syntax

```
ip prefix-list <list-name> [seq <1-429496725>] {deny|permit}
{any|<ip-prefix>} [ge <0-32>] [le <0-32>]
ip prefix-list <list-name> description <text>
ip prefix-list sequence-number
no ip prefix-list <list-name> [seq <1-429496725>]
no ip prefix-list <list-name> [description <text>]
no ip prefix-list sequence-number
```

Parameter	Description
<list-name>	Specifies the name of a prefix list.
seq *<1-429496725>*	Sequence number of the prefix list entry.
deny	Specifies that the prefixes are excluded from the list.
permit	Specifies that the prefixes are included in the list.
<ip-prefix>	Specifies the IPv4 address and length of the network mask in dotted decimal in the format A.B.C.D/M.
any	Any prefix match. Same as **0.0.0.0/0 le 32**.
ge *<0-32>*	Specifies the minimum prefix length to be matched.
le *<0-32>*	Specifies the maximum prefix length to be matched.
description *<text>*	Text description of the prefix list.
sequence-number	Specify sequence numbers included or excluded in prefix list.

Mode Global Configuration

Usage When the device processes a prefix list, it starts to match prefixes from the top of the prefix list, and stops whenever a permit or deny occurs. To promote efficiency, use the **seq** parameter and place common permits or denials towards the top of the list. If you do not use the **seq** parameter, the sequence values are generated in a sequence of 5.

The parameters **ge** and **le** specify the range of the prefix lengths to be matched. When setting these parameters, set the **le** value to be less than 32, and the **ge** value to be less than or equal to the **le** value and greater than the ip-prefix mask length.

Prefix lists implicitly exclude prefixes that are not explicitly permitted in the prefix list. This means if a prefix that is being checked against the prefix list reaches the end of the prefix list without matching a permit or deny, this prefix will be denied.

Example In the below sample configuration, the last `ip prefix-list` command in the below list matches all, and the first `ip prefix-list c`ommand denies the IP network `76.2.2.0`:

```
awplus(config)# router bgp 100
awplus(config-router)# network 172.1.1.0
awplus(config-router)# network 172.1.2.0
awplus(config-router)# neighbor 10.6.5.3 remote-as 300
awplus(config-router)# neighbor 10.6.5.3 prefix-list mylist out
awplus(config-router)# exit
awplus(config)# ip prefix-list mylist seq 5 deny 76.2.2.0/24
awplus(config)# ip prefix-list mylist seq 100 permit any
```

Related Commands

ipv6 prefix-list (IPv6 Prefix List)

show ip prefix-list (IPv4 Prefix List)

ipv6 prefix-list (IPv6 Prefix List)

Overview Use this command to create an IPv6 prefix list or an entry in an existing prefix list.

Use the **no** variant of this command to delete a whole prefix list or a prefix list entry.

Syntax

```
ipv6 prefix-list <list-name> [seq <1-429496725>] {deny|permit}
{any|<ipv6-prefix>} [ge <0-128>] [le <0-128>]
ipv6 prefix-list <list-name> description <text>
no ipv6 prefix-list <list-name> [seq <1-429496725>]
no ipv6 prefix-list <list-name> [description <text>]
```

Parameter	Description
`<list-name>`	Specifies the name of a prefix list.
`seq <1-429496725>`	Sequence number of the prefix list entry.
`deny`	Specifies that the prefixes are excluded from the list.
`permit`	Specifies that the prefixes are included in the list.
`<ipv6-prefix>`	Specifies the IPv6 prefix and prefix length in hexadecimal in the format X:X::X:X/M.
`any`	Any prefix match. Same as : :0/0 le 128.
`ge <0-128>`	Specifies the minimum prefix length to be matched.
`le <0-128>`	Specifies the maximum prefix length to be matched.
`description`	Prefix list specific description.
`<text>`	Up to 80 characters of text description of the prefix list.

Mode Global Configuration

Usage When the device processes a prefix list, it starts to match prefixes from the top of the prefix list, and stops whenever a permit or deny occurs. To promote efficiency, use the **seq** parameter and place common permits or denials towards the top of the list. If you do not use the **seq** parameter, the sequence values are generated in a sequence of 5.

The parameters `ge` and `le` specify the range of the prefix lengths to be matched. The parameters `ge` and `le` are only used if an ip-prefix is stated. When setting these parameters, set:

- the `le` value to be less than 128, and
- the `ge` value to be less than or equal to the `le` value, and greater than the ip-prefix mask length.

Prefix lists implicitly exclude prefixes that are not explicitly permitted in the prefix list. This means if a prefix that is being checked against the prefix list reaches the end of the prefix list without matching a permit or deny, this prefix will be denied.

Example To check the first 32 bits of the prefix `2001:db8::` and the subnet mask must be greater than or equal to `34 and less than or equal to 40`, enter the following commands:

```
awplus# configure terminal
awplus(config)# ipv6 prefix-list mylist seq 12345 permit
2001:db8::/32 ge 34 le 40
```

Related Commands

ip prefix-list (IPv4 Prefix List)

show ipv6 prefix-list (IPv6 Prefix List)

match as-path

Overview Use this command to add an autonomous system (AS) path match clause to a route map entry. Specify the AS path attribute value or values to match by specifying the name of an AS path access list.

A BGP update message matches the route map if its attributes include AS path values that match the AS path access list.

Each entry of a route map can only match against one AS path access list in one AS path match clause. If the route map entry already has an AS path match clause, entering this command replaces that match clause with the new clause.

Note that AS path access lists and route map entries both specify an action of deny or permit. The action in the AS path access list determines whether the route map checks update messages for a given AS path value. The route map action and its **set** clauses determine what the route map does with update messages that contain that AS path value.

Use the **no** variant of this command to remove the AS path match clause from a route map entry.

Syntax

```
match as-path <as-path-listname>
no match as-path [<as-path-listname>]
```

Parameter	Description
<as-path-listname>	Specifies an AS path access list name.

Mode Route-map Configuration

Usage This command is valid for BGP update messages only.

Example To add entry `34` to the route map called `myroute`, which will discard update messages if they contain the AS path values that are included in `myaccesslist`, use the commands:

```
awplus# configure terminal
awplus(config)# route-map myroute deny 34
awplus(config-route-map)# match as-path myaccesslist
```

Related Commands

route-map

set as-path

show route-map

match community

Overview Use this command to add a community match clause to a route map entry. Specify the community value or values to match by specifying a community list. To create the community list, enter Global Configuration mode and use the ip community-list command.

A BGP update message matches the route map if its attributes include community values that match the community list.

Each entry of a route map can only match against one community list in one community match clause. If the route map entry already has a community match clause, entering this command replaces that match clause with the new clause.

Note that community lists and route map entries both specify an action of deny or permit. The action in the community list determines whether the route map checks update messages for a given community value. The route map action and its **set** clauses determine what the route map does with update messages that contain that community value.

Use the **no** variant of this command to remove the community match clause from a route map.

Syntax

```
match community
{<community-listname>|<1-99>|<100-199>}[exact-match]
```

```
no match community
[<community-listname>|<1-99>|<100-199>|exact-match]
```

Parameter	Description
<community-listname>	The community list name or number.
<1-99>	Community list number (standard range).
<100-199>	Community list number (expanded range).
exact-match	Exact matching of communities.

Mode Route-map Configuration

Usage This command is valid for BGP update messages only.

Communities are used to group and filter routes. They are designed to provide the ability to apply policies to large numbers of routes by using match and set commands. Community lists are used to identify and filter routes by their common attributes.

Example To add entry `3` to the route map called `myroute`, which will process update messages if they contain the community values that are included in `mylist`, use the commands:

```
awplus# configure terminal
awplus(config)# route-map myroute permit 3
awplus(config-route-map)# match community mylist
```

Related Commands

ip community-list

route-map

set comm-list delete

set community

show route-map

max-paths

Overview Use this command to set the number of equal-cost multi-path (ECMP) routes for eBGP or iBGP. You can install multiple BGP paths to the same destination to balance the load on the forwarding path.

Use the **no** variant of this command to disable this feature.

Syntax

```
max-paths {ebgp|ibgp} <2-64>
no max-paths ebgp [<2-64>]
no max-paths ibgp [<2-64>]
```

Parameter	Description
ebgp	eBGP ECMP session.
ibgp	iBGP ECMP session.
<2-64>	Specifies the number of routes.

Mode Global Configuration

Usage This command is available for the default BGP instance and for IPV4 and IPv6 unicast addresses.

Example

```
awplus# configure terminal
awplus(config)# router bgp 64501
awplus(config-router)# max-paths ebgp 2
```

Related commands show ip route summary

neighbor activate

Overview Use this command to enable the exchange of BGP IPv4 and BGP4+ IPv6 routes with a neighboring router, and also within either an IPv4 or an IPv6 specific address-family.

Use the **no** variant of this command to disable the exchange of information with a BGP or BGP4+ neighbor, in the Router Configuration or the Address Family Configuration mode.

Syntax

```
neighbor <neighborid> activate
no neighbor <neighborid> activate
```

Parameter	Description	
<neighborid>	{*<ip-address>* | *<ipv6-addr>* | *<peer-group>*}	
	<ip-address>	Specify the address of an IPv4 BGP neighbor, in dotted decimal notation A.B.C.D.
	<ipv6-addr>	Specify the address of an IPv6 BGP4+ neighbor, entered in hexadecimal in the format X:X::X:X.
	<peer-group>	Enter the name of an existing peer-group. For information on how to create peer groups, refer to the neighbor peer-group (add a neighbor) command, and neighbor route-map command. When this parameter is used with this command, the command applies on all peers in the specified group.

Mode [BGP] Router Configuration or IPv4 Address Family Configuration

Mode [BGP4+] IPv6 Address Family Configuration

Usage [BGP] Use this command to enable the exchange of information to a neighbor. To exchange IPv4 or IPv6 prefixes with a BGP or a BGP4+ peer, you must configure this command for the peer or the peer group. This command only enables the exchange of information. You can establish peering without this command, but no prefixes and other information is sent until you apply this command to the neighbor.

This command triggers the device to start a BGP or BGP4+ peering relationship with the specified BGP or BGP4+ neighbor and start exchanging routes with that neighbor.

The command is required for neighbors configured in Address-Family Configuration mode, but it is not required in Router Configuration mode (that is, it does not affect the device's behavior).

Examples [BGP] To enable an exchange of routes with a neighboring router with the IPv4 address 10.10.10.1, enter the commands as shown below:

```
awplus# configure terminal
awplus(config)# router bgp 10
awplus(config-router)# neighbor 10.10.10.1 activate
```

To disable an exchange of routes with a neighboring router with the IPv4 address 10.10.10.1, enter the commands as shown below:

```
awplus# configure terminal
awplus(config)# router bgp 10
awplus(config-router)# no neighbor 10.10.10.1 activate
```

To enable an exchange of routes in Address Family Configuration mode with a neighboring router with the IPv4 address 10.10.10.1, enter the commands as shown below:

```
awplus# configure terminal
awplus(config)# router bgp 10
awplus(config-router)# address-family ipv4
awplus(config-router-af)# neighbor 10.10.10.1 activate
```

To disable an exchange of routes in Address Family Configuration mode with a neighboring router with the IPv4 address 10.10.10.1, enter the commands as shown below:

```
awplus# configure terminal
awplus(config)# router bgp 10
awplus(config-router)# address-family ipv4
awplus(config-router-af)# no neighbor 10.10.10.1 activate
```

To enable an exchange of routes with a neighboring router with the peer-group named group1, enter the commands as shown below:

```
awplus# configure terminal
awplus(config)# router bgp 10
awplus(config-router)# neighbor group1 peer-group
awplus(config-router)# neighbor 10.10.0.63 remote-as 10
awplus(config-router)# neighbor 10.10.0.63 peer-group group1
awplus(config-router)# neighbor group1 activate
```

To disable an exchange of routes with a neighboring router with the peer-group named group1, enter the commands as shown below:

```
awplus# configure terminal
awplus(config)# router bgp 10
awplus(config-router)# no neighbor group1 activate
```

Examples [BGP4+]

To enable an exchange of routes in IPv6 Address Family Configuration mode with a neighboring router with the IPv6 address 2001:0db8:010d::1, enter the commands as shown below:

```
awplus# configure terminal
awplus(config)# router bgp 10
awplus(config-router)# address-family ipv6
awplus(config-router-af)# neighbor 2001:0db8:010d::1 activate
```

To disable an exchange of routes in IPv6 Address Family Configuration mode with a neighboring router with the IPv6 address 2001:0db8:010d::1, enter the commands as shown below:

```
awplus# configure terminal
awplus(config)# router bgp 10
awplus(config-router)# address-family ipv6
awplus(config-router-af)# no neighbor 2001:0db8:010d::1
activate
```

To enable an exchange of routes with a neighboring router with the peer-group named group1, enter the commands as shown below:

```
awplus# configure terminal
awplus(config)# router bgp 10
awplus(config-router)# neighbor group1 peer-group
awplus(config-router)# neighbor 2001:0db8:010d::1 remote-as 10
awplus(config-router)# address-family ipv6
awplus(config-router-af)# neighbor 2001:0db8:010d::1
peer-group group1
awplus(config-router-af)# neighbor group1 activate
```

To disable an exchange of routes with a neighboring router with the peer-group named group1, enter the commands as shown below:

```
awplus# configure terminal
awplus(config)# router bgp 10
awplus(config-router)# address-family ipv6
awplus(config-router-af)# no neighbor group1 activate
```

Related Commands

neighbor peer-group (add a neighbor)

neighbor route-map

Command changes

Version 5.4.6-2.1: VRF-lite support added.

neighbor advertisement-interval

Overview Use this command to set the minimum interval between sending iBGP or eBGP routing updates for a given route. This command reduces the flapping of individual routes.

Use the **no** variant of this command to set the interval time to the default values (30 seconds for eBGP peers and 5 seconds for iBGP peers) for a given route.

Syntax

```
neighbor <neighborid> advertisement-interval <time>
no neighbor <neighborid> advertisement-interval [<time>]
```

Parameter	Description	
<neighborid>	{*<ip-address>* | *<ipv6-addr>* | *<peer-group>*}	
	<ip-address>	Specify the address of an IPv4 BGP neighbor, in dotted decimal notation A.B.C.D.
	<ipv6-addr>	Specify the address of an IPv6 BGP4+ neighbor, entered in hexadecimal in the format X:X::X:X.
	<peer-group>	Enter the name of an existing peer-group. For information on how to create peer groups, refer to the neighbor peer-group (add a neighbor) command, and neighbor route-map command. When this parameter is used with this command, the command applies on all peers in the specified group. Note that if you apply an advertisement-interval value to a peer group it will apply to all members in the peer group.
<time>	*<0-600>*	Advertisement -interval value in seconds.

Default The default interval between sending routing updates for a given route to eBGP peers is 30 seconds, and the default interval for a given route to iBGP peers is 5 seconds.

Mode Router Configuration

Usage Use this command to set the minimum interval between sending iBGP or eBGP routing updates for a given route. To reduce the flapping of routes to the internet, set a minimum advertisement interval, so iBGP or eBGP routing updates are sent per interval seconds.

BGP dampening can also be used to control the effects of flapping routes. See the bgp dampening command in this chapter, and the Routing_Protocol Guide for more information.

The advertisement-interval time value is the minimum time between the advertisement of Update messages sent from a BGP speaker to report changes to

eBGP or iBGP peers. This is the minimum time between two Update messages sent to iBGP or eBGP peers.

See the neighbor as-origination-interval command to set the interval time between messages to iBGP peers, which have prefixes within the local AS. Use this command instead of the neighbor as-origination-interval command for eBGP peers with prefixes not in the same AS and updates not in a local AS.

Examples [BGP]

```
awplus# configure terminal
awplus(config)# router bgp 10
awplus(config-router)# neighbor 10.10.0.3
advertisement-interval 45
awplus# configure terminal
awplus(config)# router bgp 10
awplus(config-router)# no neighbor 10.10.0.3
advertisement-interval
awplus# configure terminal
awplus(config)# router bgp 10
awplus(config-router)# neighbor group1 peer-group
awplus(config-router)# neighbor 10.10.0.3 remote-as 10
awplus(config-router)# neighbor 10.10.0.3 peer-group group1
awplus(config-router)# neighbor group1 advertisement-interval
45
awplus# configure terminal
awplus(config)# router bgp 10
awplus(config-router)# no neighbor group1
advertisement-interval
```

Examples [BGP4+]

```
awplus# configure terminal
awplus(config)# router bgp 10
awplus(config-router)# neighbor 2001:0db8:010d::1
advertisement-interval 45
awplus# configure terminal
awplus(config)# router bgp 10
awplus(config-router)# no neighbor 2001:0db8:010d::1
advertisement-interval
awplus# configure terminal
awplus(config)# router bgp 10
awplus(config-router)# neighbor group1 peer-group
awplus(config-router)# neighbor 2001:0db8:010d::1 remote-as 10
awplus(config-router)# address-family ipv6
awplus(config-router-af)# neighbor 2001:0db8:010d::1
peer-group group1
awplus(config-router-af)# neighbor group1
advertisement-interval 45
awplus# configure terminal
awplus(config)# router bgp 10
awplus(config-router)# address-family ipv6
awplus(config-router-af)# no neighbor group1
advertisement-interval
```

Related Commands

neighbor as-origination-interval

neighbor peer-group (add a neighbor)

neighbor route-map

show bgp ipv6 neighbors (BGP4+ only)

show ip bgp neighbors (BGP only)

neighbor allowas-in

Overview Use this command to accept an AS_PATH with the specified Autonomous System (AS) number from inbound updates for both BGP and BGP4+ routes.

This command allows BGP and BGP4+ to accept prefixes with the same ASN in the AS_PATH attribute. This command allows BGP and BGP4+ to accept up to 10 instances, configured by the <*occurrences*> placeholder, of its own AN in the AS_PATH for a prefix.

Use the **no** variant of this command to revert to default functionality (disabled by default).

Syntax

```
neighbor <neighborid> allowas-in <occurrences>
no neighbor <neighborid> allowas-in
```

Parameter	Description	
<*neighborid*>	{<*ip-address*>|<*ipv6-addr*>|<*peer-group*>}	
	<*ip-address*>	Specify the address of an IPv4 BGP neighbor, in dotted decimal notation A.B.C.D.
	<*ipv6-addr*>	Specify the address of an IPv6 BGP4+ neighbor, entered in hexadecimal in the format X:X::X:X.
	<*peer-group*>	Enter the name of an existing peer-group. For information on how to create peer groups, refer to the neighbor peer-group (add a neighbor) command, and neighbor route-map command. When this parameter is used with this command, the command applies on all peers in the specified group.
<*occurrences*>	<*1-10*> Specifies the number of occurrences of the AS number.	

Default Disabled

Mode [BGP] Router Configuration or IPv4 Address Family Configuration

Mode [BGP4+] IPv6 Address Family Configuration

Usage Use this command to configure PE (Provider Edge) routers to allow re-advertisement of all prefixes containing duplicate Autonomous System Numbers (ASNs). In a hub and spoke configuration, a PE router re-advertises all prefixes containing duplicate ASNs. Specify the remote-as or peer-group first using the related commands. The command allows a receiving peer to accept prefixes with its own AN in the AS_PATH, up the maximum number of instances, as configured by the <*occurrences*> placeholder.

Examples [BGP]

```
awplus# configure terminal
awplus(config)# router bgp 10
awplus(config-router)# neighbor 10.10.0.1 allowas-in 3
awplus# configure terminal
awplus(config)# router bgp 10
awplus(config-router)# address-family ipv4
awplus(config-router-af)# neighbor 10.10.0.1 allowas-in 3
awplus# configure terminal
awplus(config)# router bgp 10
awplus(config-router)# no neighbor 10.10.0.1 allowas-in
awplus# configure terminal
awplus(config)# router bgp 10
awplus(config-router)# address-family ipv4
awplus(config-router-af)# no neighbor 10.10.0.1 allowas-in
awplus# configure terminal
awplus(config)# router bgp 10
awplus(config-router)# neighbor group1 peer-group
awplus(config-router)# neighbor 10.10.0.1 remote-as 10
awplus(config-router)# neighbor 10.10.0.1 peer-group group1
awplus(config-router)# neighbor group1 allowas-in 3
awplus# configure terminal
awplus(config)# router bgp 10
awplus(config-router)# address-family ipv4
awplus(config-router-af)# neighbor group1 allowas-in 3
```

Examples [BGP4+]

```
awplus# configure terminal
awplus(config)# router bgp 10
awplus(config-router)# address-family ipv6
awplus(config-router-af)# neighbor 2001:0db8:010d::1
allowas-in 3
awplus# configure terminal
awplus(config)# router bgp 10
awplus(config-router)# address-family ipv6
awplus(config-router-af)# no neighbor 2001:0db8:010d::1
allowas-in
awplus# configure terminal
awplus(config)# router bgp 10
awplus(config-router)# neighbor group1 peer-group
awplus(config-router)# neighbor 2001:0db8:010d::1 remote-as 10
awplus(config-router)# address-family ipv6
awplus(config-router-af)# neighbor 2001:0db8:010d::1
peer-group group1
awplus(config-router-af)# neighbor group1 allowas-in 3
awplus# configure terminal
awplus(config)# router bgp 10
awplus(config-router)# address-family ipv6
awplus(config-router-af)# neighbor group1 allowas-in 3
```

Related Commands

neighbor peer-group (add a neighbor)

neighbor route-map

neighbor as-origination-interval

Overview Use this command to adjust the sending of AS (Autonomous System) origination routing updates to a specified iBGP peer. This command adjusts the rate at which updates are sent to a specified iBGP peer (15 seconds by default). You must set a rate when you enable it.

The as-origination-interval is the minimum time set between the advertisement of Update messages sent from a BGP speaker to an iBGP peer to report changes within the local AS.

Use the **no** variant of this command to reset the timer to the default value of 15 seconds.

Syntax [BGP]

```
neighbor <neighbor_address> as-origination-interval <time>
no neighbor <neighbor_address> as-origination-interval [<time>]
```

Syntax [BGP4+]

```
neighbor <ipv6-addr> as-origination-interval <time>
no neighbor <ipv6-addr> as-origination-interval [<time>]
```

Parameter	Description
<neighbor_address>	Specify a neighbor IPv4 address, in dotted decimal in the format A.B.C.D.
<ipv6-addr>	Specify an address of an IPv6 BGP4+ neighbor, entered in hexadecimal in the format X:X::X:X.
<time>	<1-600> Time in seconds.

Default The default interval between sending routing updates to iBGP peers, which include a prefix that originates from the local AS, is 15 seconds by default.

Mode Router Configuration

Usage This command is used to change the minimum interval between sending AS-origination routing updates. The update interval for iBGP peers can be set from 1 to 600 seconds.

For interoperability with other vendors' devices, we recommend using the default value. The AS origination interval timer may not be available to adjust on other vendors' devices. Applying the default of 15 seconds across the AS maintains a common timer policy.

AlliedWare Plus devices use the default 15 second AS Origination Interval timer as per RFC 4271, a 30 second keepalive timer, a 90 second hold timer, a 120 second connect timer, a 5 second iBGP peer route advertisement interval, and a 30 second eBGP peer route advertisement interval.

Cisco devices use a 60 second keepalive timer, a 180 second hold timer, and no iBGP peer route interval timer (0). Juniper devices use a 10 second AS Origination Interval timer.

The as-origination-interval time value is the minimum amount of time between the advertisement of Update messages sent from a BGP speaker to report changes within the local AS. This is the minimum time between two Update messages to iBGP peers, which contain a prefix that originates from the same AS. See the neighbor advertisement-interval command to set time between messages to eBGP peers.

Use this command instead of the neighbor advertisement-interval command for iBGP peers with prefixes in the same AS for updates only within a local AS.

Examples [BGP]

```
awplus# configure terminal
awplus(config)# router bgp 100
awplus(config-router)# neighbor 10.10.0.1
as-origination-interval 10
awplus# configure terminal
awplus(config)# router bgp 100
awplus(config-router)# no neighbor 10.10.0.1
as-origination-interval
```

Examples [BGP4+]

```
awplus# configure terminal
awplus(config)# router bgp 100
awplus(config-router)# neighbor 2001:0db8:010d::1
as-origination-interval 10
awplus# configure terminal
awplus(config)# router bgp 100
awplus(config-router)# no neighbor 2001:0db8:010d::1
as-origination-interval
```

Validation Commands

show bgp ipv6 neighbors (BGP4+ only)

show ip bgp neighbors (BGP only)

Related Commands

neighbor advertisement-interval

address-family

neighbor attribute-unchanged

Overview Use this command to advertise unchanged BGP or BGP4+ attributes to the specified BGP or BGP4+ neighbor.

Use the **no** variant of this command to disable this function.

Syntax

```
neighbor <neighborid> attribute-unchanged
{as-path|next-hop|med}
```

```
no neighbor <neighborid> attribute-unchanged
{as-path|next-hop|med}
```

Parameter	Description	
<neighborid>	{*<ip-address>*|*ipv6-addr*|*<peer-group>*}	
	<ip-address>	Specify the address of an IPv4 BGP neighbor, in dotted decimal notation A.B.C.D.
	<ipv6-addr>	Specify the address of an IPv6 BGP4+ neighbor, entered in hexadecimal in the format X:X::X:X.
	<peer-group>	Enter the name of an existing peer-group. For information on how to create peer groups, refer to the neighbor peer-group (add a neighbor) command, and neighbor route-map command. When this parameter is used with this command, the command applies on all peers in the specified group.
as-path	AS path attribute.	
next-hop	Next hop attribute.	
med	Multi Exit Discriminator.	

Mode [BGP] Router Configuration or IPv4 Address Family Configuration

Mode [BGP4+] IPv6 Address Family Configuration

Usage Note that specifying this command with the optional **as-path** parameter has the same effect as invoking the neighbor transparent-as command.

Note this specifying this command with the optional **next-hop** parameter has the same effect as invoking the neighbor transparent-nexthop command.

Examples [BGP]

```
awplus# configure terminal
awplus(config)# router bgp 10
awplus(config-router)# neighbor 10.10.0.75 attribute-unchanged
as-path med
awplus# configure terminal
awplus(config)# router bgp 10
awplus(config-router)# no neighbor 10.10.0.75
attribute-unchanged as-path med
awplus# configure terminal
awplus(config)# router bgp 10
awplus(config-router)# address-family ipv4
awplus(config-router-af)# neighbor 10.10.0.75
attribute-unchanged as-path med
awplus# configure terminal
awplus(config)# router bgp 10
awplus(config-router)# address-family ipv4
awplus(config-router-af)# no neighbor 10.10.0.75
attribute-unchanged as-path med
awplus# configure terminal
awplus(config)# router bgp 10
awplus(config-router)# neighbor group1 peer-group
awplus(config-router)# neighbor 10.10.0.75 remote-as 10
awplus(config-router)# neighbor 10.10.0.75 peer-group group1
awplus(config-router)# neighbor group1 attribute-unchanged
as-path med
awplus# configure terminal
awplus(config)# router bgp 10
awplus(config-router)# no neighbor group1 attribute-unchanged
as-path med
```

Examples [BGP4+]

```
awplus# configure terminal
awplus(config)# router bgp 10
awplus(config-router)# address-family ipv6
awplus(config-router-af)# neighbor 2001:0db8:010d::1
attribute-unchanged as-path med
awplus# configure terminal
awplus(config)# router bgp 10
awplus(config-router)# address-family ipv6
awplus(config-router-af)# no neighbor 2001:0db8:010d::1
attribute-unchanged as-path med
awplus# configure terminal
awplus(config)# router bgp 10
awplus(config-router)# neighbor group1 peer-group
awplus(config-router)# neighbor 2001:0db8:010d::1 remote-as 10
awplus(config-router)# address-family ipv6
awplus(config-router-af)# neighbor 2001:0db8:010d::1
peer-group group1
awplus(config-router-af)# neighbor group1 attribute-unchanged
as-path med
awplus# configure terminal
awplus(config)# router bgp 10
awplus(config-router)# address-family ipv6
awplus(config-router-af)# no neighbor group1
attribute-unchanged as-path med
```

Related Commands

neighbor peer-group (add a neighbor)

neighbor route-map

neighbor transparent-as

neighbor transparent-nexthop

neighbor capability graceful-restart

Overview Use this command to configure the device to advertise the Graceful Restart Capability to BGP and BGP4+ neighbors.

Use the **no** variant of this command to configure the device so it does not advertise the Graceful Restart Capability to its neighbor.

Syntax

```
neighbor <neighborid> capability graceful-restart
no neighbor <neighborid> capability graceful-restart
```

Parameter	Description	
<neighborid>	{*<ip-address>*|*<ipv6-addr>*|*<peer-group>*}	
	<ip-address>	Specify the address of an IPv4 BGP neighbor, in dotted decimal notation A.B.C.D.
	<ipv6-addr>	Specify the address of an IPv6 BGP4+ neighbor, entered in hexadecimal in the format X:X::X:X.
	<peer-group>	Enter the name of an existing peer-group. For information on how to create peer groups, refer to the neighbor peer-group (add a neighbor) command, and neighbor route-map command. When this parameter is used with this command, the command applies on all peers in the specified group.

Default Disabled

Mode [BGP] Router Configuration or IPv4 Address Family Configuration

Mode [BGP4+] IPv6 Address Family Configuration

Usage Use the **neighbor capability graceful-restart** command to advertise to the BGP or BGP4+ neighbor routers the capability of graceful restart. First specify the BGP or BGP4+ neighbor's **remote-as** identification number as assigned by the neighbor router.

The graceful restart capability is advertised only when the graceful restart capability has been enabled using the bgp graceful-restart command.

Examples [BGP]

```
awplus# configure terminal
awplus(config)# router bgp 10
awplus(config-router)# neighbor 10.10.10.50 capability
graceful-restart
awplus# configure terminal
awplus(config)# router bgp 10
awplus(config-router)# no neighbor 10.10.10.50 capability
graceful-restart
awplus# configure terminal
awplus(config)# router bgp 10
awplus(config-router)# address-family ipv4
awplus(config-router-af)# neighbor 10.10.10.50 capability
graceful-restart
awplus# configure terminal
awplus(config)# router bgp 10
awplus(config-router)# address-family ipv4
awplus(config-router-af)# no neighbor 10.10.10.50 capability
graceful-restart
awplus# configure terminal
awplus(config)# router bgp 10
awplus(config-router)# neighbor group1 peer-group
awplus(config-router)# neighbor 10.10.10.50 remote-as 10
awplus(config-router)# neighbor 10.10.10.50 peer-group group1
awplus(config-router)# neighbor group1 capability
graceful-restart
awplus# configure terminal
awplus(config)# router bgp 10
awplus(config-router)# no neighbor group1 capability
graceful-restart
```

Examples [BGP4+]

```
awplus# configure terminal
awplus(config)# router bgp 10
awplus(config-router)# address-family ipv6
awplus(config-router-af)# neighbor 2001:0db8:010d::1
capability graceful-restart
awplus# configure terminal
awplus(config)# router bgp 10
awplus(config-router)# address-family ipv6
awplus(config-router-af)# no neighbor 2001:0db8:010d::1
capability graceful-restart
awplus# configure terminal
awplus(config)# router bgp 10
awplus(config-router)# neighbor group1 peer-group
awplus(config-router)# neighbor 2001:0db8:010d::1 remote-as 10
awplus(config-router)# address-family ipv6
awplus(config-router-af)# neighbor 2001:0db8:010d::1
peer-group group1
awplus(config-router-af)# neighbor group1 capability
graceful-restart
awplus# configure terminal
awplus(config)# router bgp 10
awplus(config-router)# address-family ipv6
awplus(config-router-af)# no neighbor group1 capability
graceful-restart
```

Related Commands

bgp graceful-restart

neighbor peer-group (add a neighbor)

neighbor route-map

restart bgp graceful (BGP only)

neighbor capability orf prefix-list

Overview Use this command to advertise ORF (Outbound Route Filters) capability to neighbors. Use this command to dynamically filter updates. The BGP speaker can advertise a prefix list with prefixes it wishes the peer to prune or filter from outgoing updates.

Use the **no** variant of this command to disable this function.

Syntax

```
neighbor <neighborid> capability orf prefix-list
{both|receive|send}
```

```
no neighbor <neighborid> capability orf prefix-list
{both|receive|send}
```

Parameter	Description	
<neighborid>	{*<ip-address>*|*<ipv6-addr>*|*<peer-group>*}	
	<ip-address>	Specify the address of an IPv4 BGP neighbor, in dotted decimal notation A.B.C.D.
	<ipv6-addr>	Specify the address of an IPv6 BGP4+ neighbor, entered in hexadecimal in the format X:X::X:X.
	<peer-group>	Enter the name of an existing peer-group. For information on how to create peer groups, refer to the neighbor peer-group (add a neighbor) command, and neighbor route-map command. When this parameter is used with this command, the command applies on all peers in the specified group.
`orf`	Advertises ORF capability to its neighbors.	
`both`	Indicates that the local router can send ORF entries to its peer as well as receive ORF entries from its peer.	
`receive`	Indicates that the local router is willing to receive ORF entries from its peer.	
`send`	Indicates that the local router is willing to send ORF entries to its peer.	

Mode [BGP] Router Configuration or IPv4 Address Family Configuration

Mode [BGP4+] IPv6 Address Family Configuration

Default Disabled

Usage Outbound Route Filters (ORFs) send and receive capabilities to lessen the number of updates exchanged between neighbors. By filtering updates, this option minimizes generating and processing of updates. The local router advertises the ORF capability in `send` mode and the remote router receives the ORF capability in

receive mode applying the filter as outbound policy. The two routers exchange updates to maintain the ORF for each router. Only an individual router or a peer-group can be configured to be in **receive** or **send** mode. A peer-group member cannot be configured in **receive** or **send** mode.

Examples [BGP]

```
awplus# configure terminal
awplus(config)# router bgp 10
awplus(config-router)# neighbor 10.10.0.5 capability orf
prefix-list both
awplus# configure terminal
awplus(config)# router bgp 10
awplus(config-router)# no neighbor 10.10.0.5 capability orf
prefix-list both
awplus# configure terminal
awplus(config)# router bgp 10
awplus(config-router)# address-family ipv4
awplus(config-router)# neighbor 10.10.0.5 capability orf
prefix-list both
awplus# configure terminal
awplus(config)# router bgp 10
awplus(config-router)# address-family ipv4
awplus(config-router)# no neighbor 10.10.0.5 capability orf
prefix-list both
awplus# configure terminal
awplus(config)# router bgp 10
awplus(config-router)# neighbor group1 peer-group
awplus(config-router)# neighbor 10.10.0.5 remote-as 10
awplus(config-router)# neighbor 10.10.0.5 peer-group group1
awplus(config-router)# neighbor group1 capability orf
prefix-list both
awplus# configure terminal
awplus(config)# router bgp 10
awplus(config-router)# no neighbor group1 capability orf
prefix-list both
```

Examples [BGP4+]

```
awplus# configure terminal
awplus(config)# router bgp 10
awplus(config-router)# address-family ipv6
awplus(config-router)# neighbor 2001:0db8:010d::1 capability
orf prefix-list both
awplus# configure terminal
awplus(config)# router bgp 10
awplus(config-router)# address-family ipv6
awplus(config-router)# no neighbor 2001:0db8:010d::1 capability
orf prefix-list both
awplus# configure terminal
awplus(config)# router bgp 10
awplus(config-router)# neighbor group1 peer-group
awplus(config-router)# neighbor 2001:0db8:010d::1 remote-as 10
awplus(config-router)# address-family ipv6
awplus(config-router-af)# neighbor 2001:0db8:010d::1
peer-group group1
awplus(config-router-af)# neighbor group1 capability orf
prefix-list both
awplus# configure terminal
awplus(config)# router bgp 10
awplus(config-router)# address-family ipv6
awplus(config-router-af)# no neighbor group1 capability orf
prefix-list both
```

Related Commands

neighbor capability orf prefix-list

neighbor peer-group (add a neighbor)

neighbor route-map

neighbor capability route-refresh

Overview Use this command to advertise route-refresh capability to the specified BGP and BGP4+ neighbors.

Use the **no** variant of this command to disable this function

Syntax

```
neighbor <neighborid> capability route-refresh
no neighbor <neighborid> capability route-refresh
```

Parameter	Description	
<neighborid>	{*<ip-address>* | *ipv6-addr>* | *<peer-group>*}	
	<ip-address>	Specify the address of an IPv4 BGP neighbor, in dotted decimal notation A.B.C.D.
	<ipv6-addr>	Specify the address of an IPv6 BGP4+ neighbor, entered in hexadecimal in the format X:X::X:X.
	<peer-group>	Enter the name of an existing peer-group. For information on how to create peer groups, refer to the neighbor peer-group (add a neighbor) command, and neighbor route-map command. When this parameter is used with this command, the command applies on all peers in the specified group.

Mode Router Configuration

Default Enabled

Usage Use this command to advertise to peer about route refresh capability support. If route refresh capability is supported, then router can dynamically request that the peer readvertises its Adj-RIB-Out.

Examples [BGP]

```
awplus# configure terminal
awplus(config)# router bgp 10
awplus(config-router)# neighbor 10.10.10.1 capability
route-refresh
awplus# configure terminal
awplus(config)# router bgp 10
awplus(config-router)# no neighbor 10.10.10.1 capability
route-refresh
awplus# configure terminal
awplus(config)# router bgp 10
awplus(config-router)# neighbor group1 peer-group
awplus(config-router)# neighbor 10.10.1.1 remote-as 10
awplus(config-router)# neighbor 10.10.1.1 peer-group group1
awplus(config-router)# neighbor group1 capability route-refresh
awplus# configure terminal
awplus(config)# router bgp 10
awplus(config-router)# no neighbor group1 capability
route-refresh
```

Examples [BGP4+]

```
awplus# configure terminal
awplus(config)# router bgp 10
awplus(config-router)# neighbor 2001:0db8:010d::1 capability
route-refresh
awplus# configure terminal
awplus(config)# router bgp 10
awplus(config-router)# no neighbor 2001:0db8:010d::1 capability
route-refresh
awplus# configure terminal
awplus(config)# router bgp 10
awplus(config-router)# neighbor group1 peer-group
awplus(config-router)# neighbor 2001:0db8:010d::1 remote-as 10
awplus(config-router)# address-family ipv6
awplus(config-router-af)# neighbor 2001:0db8:010d::1
peer-group group1
awplus(config-router-af)# exit
awplus(config-router)# neighbor group1 capability route-refresh
awplus# configure terminal
awplus(config)# router bgp 10
awplus(config-router)# no neighbor group1 capability
route-refresh
```

Related Commands

neighbor peer-group (add a neighbor)

neighbor route-map

neighbor collide-established

Overview Use this command to specify including a BGP or BGP4+ neighbor, already in an 'established' state, for conflict resolution when a TCP connection collision is detected.

Use the **no** variant of this command to remove a BGP or BGP4+ neighbor, already in an 'established' state, for conflict resolution when a TCP connection collision is detected.

Syntax

```
neighbor <neighborid> collide-established
no neighbor <neighborid> collide-established
```

Parameter	Description	
<neighborid>	{*<ip-address>*|*<ipv6-addr>*|*<peer-group>*}	
	<ip-address>	Specify the address of an IPv4 BGP neighbor, in dotted decimal notation A.B.C.D.
	<ipv6-addr>	Specify the address of an IPv6 BGP4+ neighbor, entered in hexadecimal in the format X:X::X:X.
	<peer-group>	Enter the name of an existing peer-group. For information on how to create peer groups, refer to the neighbor peer-group (add a neighbor) command, and neighbor route-map command. When this parameter is used with this command, the command applies on all peers in the specified group.

Mode Router Configuration

Usage This command must be used only when specially required. It is not required in most network deployments.

The associated functionality of including an 'established' neighbor into TCP connection collision conflict resolution is automatically enabled when neighbor is configured for BGP graceful-restart.

Examples [BGP]

```
awplus# configure terminal
awplus(config)# router bgp 10
awplus(config-router)# neighbor 10.10.10.1 collide-established
awplus# configure terminal
awplus(config)# router bgp 10
awplus(config-router)# no neighbor 10.10.10.1
collide-established
awplus# configure terminal
awplus(config)# router bgp 10
awplus(config-router)# neighbor group1 peer-group
awplus(config-router)# neighbor 10.10.10.1 remote-as 10
awplus(config-router)# neighbor 10.10.10.1 peer-group group1
awplus(config-router)# neighbor group1 collide-established
awplus# configure terminal
awplus(config)# router bgp 10
awplus(config-router)# no neighbor group1 collide-established
```

Examples [BGP4+]

```
awplus# configure terminal
awplus(config)# router bgp 10
awplus(config-router)# neighbor 2001:0db8:010d::1
collide-established
awplus# configure terminal
awplus(config)# router bgp 10
awplus(config-router)# no neighbor 2001:0db8:010d::1
collide-established
awplus# configure terminal
awplus(config)# router bgp 10
awplus(config-router)# neighbor group1 peer-group
awplus(config-router)# neighbor 2001:0db8:010d::1 remote-as 10
awplus(config-router)# address-family ipv6
awplus(config-router-af)# neighbor 2001:0db8:010d::1
peer-group group1
awplus(config-router-af)# exit
awplus(config-router)# neighbor group1 collide-established
awplus# configure terminal
awplus(config)# router bgp 10
awplus(config-router)# no neighbor group1 collide-established
```

Related Commands

neighbor peer-group (add a neighbor)

neighbor route-map

neighbor default-originate

Overview Use this command to allow a BGP or BGP4+ local router to send the default route to a neighbor.

Use the **no** variant of this command to send no route as a default route.

Syntax

```
neighbor {<neighborid>} default-originate [route-map
<routemap-name>]
```

```
no neighbor {<neighborid>} default-originate [route-map
<routemap-name>]
```

Parameter	Description	
<neighborid>	{*<ip-address>* | *<ipv6-addr>* | *<peer-group>*}	
	<ip-address>	Specify the address of an IPv4 BGP neighbor, in dotted decimal notation A.B.C.D.
	<ipv6-addr>	Specify the address of an IPv6 BGP4+ neighbor, entered in hexadecimal in the format X:X::X:X.
	<peer-group>	Enter the name of an existing peer-group. For information on how to create peer groups, refer to the neighbor peer-group (add a neighbor) command, and neighbor route-map command. When this parameter is used with this command, the command applies on all peers in the specified group.
route-map	If a route-map is specified, then the route table must contain at least one route that matches the permit criteria of the route map before the default route will be advertised to the specified neighbor.	
<routemap-name>	Enter the route-map name.	

Mode [BGP] Router Configuration or IPv4 Address Family Configuration

Mode [BGP4+] IPv6 Address Family Configuration

Examples [BGP]

```
awplus# configure terminal
awplus(config)# router bgp 10
awplus(config-router)# neighbor 10.10.10.1 default-originate
route-map myroute
awplus# configure terminal
awplus(config)# router bgp 10
awplus(config-router)# no neighbor 10.10.10.1 default-originate
route-map myroute
awplus# configure terminal
awplus(config)# router bgp 10
awplus(config)# address-family ipv4
awplus(config-router-af)# neighbor 10.10.10.1
default-originate route-map myroute
awplus# configure terminal
awplus(config)# router bgp 10
awplus(config)# address-family ipv4
awplus(config-router-af)# no neighbor 10.10.10.1
default-originate route-map myroute
awplus# configure terminal
awplus(config)# router bgp 10
awplus(config-router)# neighbor group1 peer-group
awplus(config-router)# neighbor 10.10.10.1 remote-as 10
awplus(config-router)# neighbor 10.10.10.1 peer-group group1
awplus(config-router)# neighbor group1 default-originate
route-map myroute
awplus# configure terminal
awplus(config)# router bgp 10
awplus(config-router)# no neighbor group1 default-originate
route-map myroute
```

Examples [BGP4+]

```
awplus# configure terminal
awplus(config)# router bgp 10
awplus(config-router)# address-family ipv6
awplus(config-router-af)# neighbor 2001:0db8:010d::1
default-originate route-map myroute
awplus# configure terminal
awplus(config)# router bgp 10
awplus(config-router)# address-family ipv6
awplus(config-router-af)# no neighbor 2001:0db8:010d::1
default-originate route-map myroute
awplus# configure terminal
awplus(config)# router bgp 10
awplus(config-router)# neighbor group1 peer-group
awplus(config-router)# neighbor 2001:0db8:010d::1 remote-as 10
awplus(config-router)# address-family ipv6
awplus(config-router-af)# neighbor 2001:0db8:010d::1
peer-group group1
awplus(config-router-af)# neighbor group1 default-originate
route-map myroute
awplus# configure terminal
awplus(config)# router bgp 10
awplus(config-router)# address-family ipv6
awplus(config-router-af)# no neighbor group1 default-originate
route-map myroute
```

Related Commands

neighbor peer-group (add a neighbor)

neighbor route-map

neighbor description

Overview Use this command to associate a description with a BGP or a BGP4+ neighbor. We recommend adding descriptions to defined neighbors, so any network administrators or network engineers can see a description of connected BGP or BGP4+ peers on the device.

Use the **no** variant of this command to remove the description from a BGP or a BGP4+ neighbor.

Syntax

```
neighbor <neighborid> description <description>
no neighbor <neighborid> description [<description>]
```

Parameter	Description	
<neighborid>	{*<ip-address>* | *<ipv6-addr>* | *<peer-group>*}	
	<ip-address>	Specify the address of an IPv4 BGP neighbor, in dotted decimal notation A.B.C.D.
	<ipv6-addr>	Specify the address of an IPv6 BGP4+ neighbor, entered in hexadecimal in the format X:X::X:X.
	<peer-group>	Enter the name of an existing peer-group. For information on how to create peer groups, refer to the neighbor peer-group (add a neighbor) command, and neighbor route-map command. When this parameter is used with this command, the command applies on all peers in the specified group.
<description>	Enter up to 80 characters of text describing the neighbor.	

Mode [BGP] Router Configuration or IPv4 Address Family Configuration

Mode [BGP4+] Router Configuration

Examples [BGP]

```
awplus# configure terminal
awplus(config)# router bgp 10
awplus(config-router)# neighbor 10.10.10.1 description Backup
router for sales
awplus# configure terminal
awplus(config)# router bgp 10
awplus(config-router)# no neighbor 10.10.10.1 description
awplus# configure terminal
awplus(config)# router bgp 10
awplus(config-router)# neighbor group1 peer-group
awplus(config-router)# neighbor 10.10.10.1 remote-as 10
awplus(config-router)# neighbor 10.10.10.1 peer-group group1
awplus(config-router)# neighbor group1 description Backup
router for sales
awplus# configure terminal
awplus(config)# router bgp 10
awplus(config-router)# neighbor group1 description Backup
router for sales.
```

Examples [BGP4+]

```
awplus# configure terminal
awplus(config)# router bgp 10
awplus(config-router)# neighbor 2001:0db8:010d::1 description
Backup router for sales
awplus# configure terminal
awplus(config)# router bgp 10
awplus(config-router)# no neighbor 2001:0db8:010d::1
description
awplus# configure terminal
awplus(config)# router bgp 10
awplus(config-router)# neighbor group1 peer-group
awplus(config-router)# neighbor 2001:0db8:010d::1 remote-as 10
awplus(config-router)# address-family ipv6
awplus(config-router-af)# neighbor 2001:0db8:010d::1
peer-group group1
awplus(config-router-af)# exit
awplus(config-router)# neighbor group1 description Backup
router for sales
awplus# configure terminal
awplus(config)# router bgp 10
awplus(config-router)# no neighbor group1 description Backup
router for sales
```

Related Commands

neighbor peer-group (add a neighbor)

neighbor route-map

neighbor disallow-infinite-holdtime

Overview Use this command to disallow the configuration of infinite holdtime for BGP and BGP4+.

Use the **no** variant of this command to allow the configuration of infinite holdtime for BGP or BGP4+.

Syntax [BGP]

```
neighbor {<ip-address>} disallow-infinite-holdtime
no neighbor {<ip-address>} disallow-infinite-holdtime
```

Syntax [BGP4+]

```
neighbor {<ipv6-addr>} disallow-infinite-holdtime
no neighbor {<ipv6-addr>} disallow-infinite-holdtime
```

Parameter	Description
<ip-address>	Specify the address of an IPv4 BGP neighbor, in dotted decimal notation A.B.C.D.
<ipv6-addr>	Specify the address of an IPv6 BGP4+ neighbor, entered in hexadecimal in the format X:X::X:X.

Mode Router Configuration

Usage This command enables the local BGP or BGP4+ speaker to reject holdtime "0" seconds from the peer during exchange of open messages or the user during configuration.

The **no** variant of this command allows the BGP speaker to accept "0" holdtime from the peer or during configuration.

Examples [BGP] To enable the **disallow-infinite-holdtime** feature on the BGP speaker with the IP address of `10.10.10.1`, enter the command:

```
awplus# configure terminal
awplus(config)# router bgp 10
awplus(config-router)# neighbor 10.10.10.1
disallow-infinite-holdtime
```

To disable the **disallow-infinite-holdtime** feature on the BGP speaker with the IP address of `10.10.10.10`, enter the command:

```
awplus# configure terminal
awplus(config)# router bgp 10
awplus(config-router)# no neighbor 10.10.10.1
disallow-infinite-holdtime
```

Examples [BGP4+]

To enable the **disallow-infinite-holdtime** feature on the BGP4+ speaker with the IPv6 address of `2001:0db8:010d::1`, enter the commands:

```
awplus# configure terminal
awplus(config)# router bgp 10
awplus(config-router)# neighbor
disallow-infinite-holdtime2001:0db8:010d::1
```

To disable the **disallow-infinite-holdtime** feature on the BGP4+ speaker with the IPv6 address of `2001:0db8:010d::1`, enter the commands:

```
awplus# configure terminal
awplus(config)# router bgp 10
awplus(config-router)# no neighbor
disallow-infinite-holdtime2001:0db8:010d::1
```

Related Commands

neighbor timers

neighbor dont-capability-negotiate

Overview Use this command to disable capability negotiation for BGP and BGP4+.

The capability negotiation is performed by default. This command is used to allow compatibility with older BGP versions that have no capability parameters used in open messages between peers.

Use the **no** variant of this command to enable capability negotiation.

Syntax

```
neighbor <neighborid> dont-capability-negotiate
no neighbor <neighborid> dont-capability-negotiate
```

Parameter	Description	
<neighborid>	{*<ip-address>*|*<ipv6-addr>*|*<peer-group>*}	
	<ip-address>	Specify the IPv4 address of the BGP neighbor in dotted decimal, in the format A.B.C.D.
	<ipv6-addr>	Specify the IPv6 address of the BGP4+ neighbor, entered in hexadecimal in the format X:X::X:X.
	<peer-group>	Enter the name of an existing peer-group. For information on how to create peer groups, refer to the neighbor peer-group (add a neighbor) and neighbor route-map commands. When this parameter is used with this command, the command applies on all peers in the specified group.

Mode Router Configuration

Examples [BGP]

```
awplus# configure terminal
awplus(config)# router bgp 10
awplus(config-router)# neighbor 10.10.0.34
dont-capability-negotiate
awplus# configure terminal
awplus(config)# router bgp 10
awplus(config-router)# no neighbor 10.10.0.34
dont-capability-negotiate
awplus# configure terminal
awplus(config)# router bgp 10
awplus(config-router)# neighbor group1 peer-group
awplus(config-router)# neighbor 10.10.10.34 remote-as 100
awplus(config-router)# neighbor 10.10.10.34 peer-group group1
awplus(config-router)# neighbor group1
dont-capability-negotiate
awplus# configure terminal
awplus(config)# router bgp 10
awplus(config-router)# no neighbor group1
dont-capability-negotiate
```

Examples [BGP4+]

```
awplus# configure terminal
awplus(config)# router bgp 10
awplus(config-router)# neighbor 2001:0db8:010d::1
dont-capability-negotiate
awplus# configure terminal
awplus(config)# router bgp 10
awplus(config-router)# no neighbor 2001:0db8:010d::1
dont-capability-negotiate
awplus# configure terminal
awplus(config)# router bgp 10
awplus(config-router)# neighbor group1 peer-group
awplus(config-router)# neighbor 2001:0db8:010d::1 remote-as 100
awplus(config-router)# address-family ipv6
awplus(config-router-af)# neighbor 2001:0db8:010d::1
peer-group group1
awplus(config-router-af)# exit
awplus(config-router)# neighbor group1
dont-capability-negotiate
awplus# configure terminal
awplus(config)# router bgp 10
awplus(config-router)# no neighbor group1
dont-capability-negotiate
```

Related Commands

neighbor peer-group (add a neighbor)

neighbor route-map

neighbor ebgp-multihop

Overview Use this command to accept and attempt BGP or BGP4+ connections to external peers on indirectly connected networks.

Effectively, this command sets the TTL value in the BGP or BGP4+ packets that the router sends to the neighbor, so that the packets may traverse the network route to the neighbor.

The device will not establish a connection to a multihop neighbor, if the only route to the multihop peer is a default route.

Use the **no** variant of this command to return to the default.

Syntax

```
neighbor <neighborid> ebgp-multihop [<count>]
no neighbor <neighborid> ebgp-multihop [<count>]
```

Parameter	Description	
<neighborid>	{*<ip-address>* | *ipv6-addr* | *<peer-group>*}	
	<ip-addr>	Specify the address of an IPv4 BGP neighbor, entered in dotted decimal notation A.B.C.D.
	<ipv6-addr>	Specify the address of an IPv6 BGP4+ neighbor, entered in hexadecimal in the format X:X::X:X.
	<peer-group>	Enter the name of an existing peer-group. For information on how to create peer groups, refer to the neighbor peer-group (add a neighbor) command, and neighbor route-map command. When this parameter is used with this command, the command applies on all peers in the specified group.
<count>	*<1-255>* The Maximum hop count, that is set in the TTL field of the BGP packets. If this optional parameter is not specified with the command, then the Maximum hop count is set to 255.	

Mode [BGP] Router Configuration or IPv4 Address Family Configuration

Mode [BGP4+] Router Configuration

Examples [BGP]

```
awplus# configure terminal
awplus(config)# router bgp 10
awplus(config-router)# neighbor 10.10.10.34 remote-as 10
awplus(config-router)# neighbor 10.10.10.34 ebgp-multihop 5
awplus# configure terminal
awplus(config)# router bgp 10
awplus(config-router)# no neighbor 10.10.10.34 ebgp-multihop 5
awplus# configure terminal
awplus(config)# router bgp 10
awplus(config-router)# neighbor group1 peer-group
awplus(config-router)# neighbor 10.10.10.34 remote-as 10
awplus(config-router)# neighbor 10.10.10.34 peer-group group1
awplus(config-router)# neighbor group1 ebgp-multihop 5
awplus# configure terminal
awplus(config)# router bgp 10
awplus(config-router)# no neighbor group1 ebgp-multihop 5
```

Examples [BGP4+]

```
awplus# configure terminal
awplus(config)# router bgp 10
awplus(config-router)# neighbor 2001:0db8:010d::1 remote-as 10
awplus(config-router)# neighbor 2001:0db8:010d::1
ebgp-multihop 5
awplus# configure terminal
awplus(config)# router bgp 10
awplus(config-router)# no neighbor 2001:0db8:010d::1
ebgp-multihop 5
awplus# configure terminal
awplus(config)# router bgp 10
awplus(config-router)# neighbor group1 peer-group
awplus(config-router)# neighbor 2001:0db8:010d::1 remote-as 10
awplus(config-router)# address-family ipv6
awplus(config-router-af)# neighbor 2001:0db8:010d::1
peer-group group1
awplus(config-router-af)# exit
awplus(config-router)# neighbor group1 ebgp-multihop 5
awplus# configure terminal
awplus(config)# router bgp 10
awplus(config-router)# no neighbor group1 ebgp-multihop 5
```

Related Commands

neighbor ebgp-multihop

neighbor peer-group (add a neighbor)

neighbor route-map

neighbor enforce-multihop

Overview Use this command to enforce the requirement that BGP and BGP4+ neighbors form multihop connections.

Use the **no** variant of this command to turn off this feature.

Syntax

```
neighbor <neighborid> enforce-multihop
no neighbor <neighborid> enforce-multihop
```

Parameter	Description	
<neighborid>	{*<ip-address>*|*<ipv6-addr>*|*<peer-group>*}	
	<ip-address>	The address of an IPv4 BGP neighbor, in dotted decimal notation A.B.C.D.
	<ipv6-addr>	The address of an IPv6 BGP4+ neighbor, entered in hexadecimal in the format X:X::X:X.
	<peer-group>	Name of an existing peer-group. For information on how to create peer groups, refer to the neighbor peer-group (add a neighbor) command, and neighbor route-map command. When this parameter is used with this command, the command applies on all peers in the specified group.

Mode [BGP] Router Configuration or IPv4 Address Family Configuration

Mode [BGP4+] Router Configuration

Examples [BGP]

```
awplus# configure terminal
awplus(config)# router bgp 10
awplus(config-router)# neighbor 10.10.0.34 remote-as 10
awplus(config-router)# neighbor 10.10.0.34 enforce-multihop
awplus# configure terminal
awplus(config)# router bgp 10
awplus(config-router)# no neighbor 10.10.0.34 enforce-multihop
awplus# configure terminal
awplus(config)# router bgp 10
awplus(config-router)# neighbor group1 peer-group
awplus(config-router)# neighbor 10.10.10.34 remote-as 10
awplus(config-router)# neighbor 10.10.10.34 peer-group group1
awplus(config-router)# neighbor group1 enforce-multihop
awplus# configure terminal
awplus(config)# router bgp 10
awplus(config-router)# no neighbor group1 enforce-multihop
```

Examples [BGP4+]

```
awplus# configure terminal
awplus(config)# router bgp 10
awplus(config-router)# neighbor 2001:0db8:010d::1 remote-as 10
awplus(config-router)# neighbor 2001:0db8:010d::1
enforce-multihop
awplus# configure terminal
awplus(config)# router bgp 10
awplus(config-router)# no neighbor 2001:0db8:010d::1
enforce-multihop
awplus# configure terminal
awplus(config)# router bgp 10
awplus(config-router)# neighbor group1 peer-group
awplus(config-router)# neighbor 2001:0db8:010d::1 remote-as 10
awplus(config-router)# address-family ipv6
awplus(config-router-af)# neighbor 2001:0db8:010d::1
peer-group group1
awplus(config-router-af)# exit
awplus(config-router)# neighbor group1 enforce-multihop
awplus# configure terminal
awplus(config)# router bgp 10
awplus(config-router)# no neighbor group1 enforce-multihop
```

Related Commands

neighbor peer-group (add a neighbor)

neighbor route-map

neighbor filter-list

Overview This command creates a BGP or BGP4+ filter using an AS (Autonomous System) path list. This command specifies an AS path list, which it then applies to filter updates to and from a BGP or a BGP4+ neighbor

The **no** variant of this command removes the previously specified BGP or BGP4+ filter using access control lists.

Syntax

```
neighbor <neighborid> filter-list <listname> {in|out}
no neighbor <neighborid> filter-list <listname> {in|out}
```

Parameter	Description	
<neighborid>	Specify the identification method for the BGP or BGP4+ peer. Use one of the following formats:	
	<ip-address>	Specify the address of an IPv4 BGP neighbor, in dotted decimal notation A.B.C.D.
	<ipv6-addr>	Specify the address of an IPv6 BGP4+ neighbor, entered in hexadecimal in the format X:X::X:X.
	<peer-group>	Enter the name of an existing peer-group. For information on how to create peer groups, refer to the neighbor peer-group (add a neighbor) command, and neighbor route-map command. When this parameter is used with this command, the command applies on all peers in the specified group.
<listname>	Specify the name of an AS (Autonomous System) path list.	
`in`	Indicates that incoming advertised routes will be filtered.	
`out`	Indicates that outgoing advertised routes will be filtered.	

Mode [BGP] Router Configuration or IPv4 Address Family Configuration

Mode [BGP4+] IPv6 Address Family Configuration

Usage This command specifies a filter for updates based on a BGP AS (Autonomous System) path list.

Examples [BGP]

```
awplus# configure terminal
awplus(config)# router bgp 10
awplus(config-router)# neighbor 10.10.0.34 filter-list list1
out
awplus# configure terminal
awplus(config)# router bgp 10
awplus(config-router)# no neighbor 10.10.0.34 filter-list list1
out
awplus# configure terminal
awplus(config)# router bgp 10
awplus(config-router)# address-family ipv4
awplus(config-router-af)# neighbor 10.10.0.34 filter-list list1
out
awplus# configure terminal
awplus(config)# router bgp 10
awplus(config-router)# address-family ipv4
awplus(config-router-af)# no neighbor 10.10.0.34 filter-list
list1 out
awplus# configure terminal
awplus(config)# router bgp 10
awplus(config-router)# neighbor group1 peer-group
awplus(config-router)# neighbor 10.10.10.34 remote-as 10
awplus(config-router)# neighbor 10.10.10.34 peer-group group1
awplus(config-router)# neighbor group1 filter-list list1 out
awplus# configure terminal
awplus(config)# router bgp 10
awplus(config-router)# no neighbor group1 filter-list list1 out
```

Examples [BGP4+]

```
awplus# configure terminal
awplus(config)# router bgp 10
awplus(config-router)# address-family ipv6
awplus(config-router-af)# neighbor 2001:0db8:010d::1
filter-list list1 out
awplus# configure terminal
awplus(config)# router bgp 10
awplus(config-router)# address-family ipv6
awplus(config-router-af)# no neighbor 2001:0db8:010d::1
filter-list list1 out
awplus# configure terminal
awplus(config)# router bgp 10
awplus(config-router)# neighbor group1 peer-group
awplus(config-router)# neighbor 2001:0db8:010d::1 remote-as 10
awplus(config-router)# address-family ipv6
awplus(config-router-af)# neighbor 2001:0db8:010d::1
peer-group group1
awplus(config-router-af)# neighbor group1 filter-list list1 out
awplus# configure terminal
awplus(config)# router bgp 10
awplus(config-router)# address-family ipv6
awplus(config-router-af)# no neighbor group1 filter-list list1
out
```

Related Commands

neighbor peer-group (add a neighbor)

neighbor route-map

neighbor interface

Overview Use this command to configure the interface name of a BGP4+ speaking neighbor.

Use the **no** variant of this command to disable this function.

Syntax [BGP4+]

```
neighbor {<ipv6-addr>|<ipaddress>} interface <interface>
no neighbor {<ipv6-addr>|<ipaddress>} interface <interface>
```

Parameter	Description
<ipaddress>	Specifies the IPv4 address of the BGP neighbor - entered in dotted decimal notation in the format A.B.C.D.
<ipv6-addr>	Specifies the IPv6 address of the BGP4+ neighbor, entered in hexadecimal in the format X:X::X:X.
<interface>	Specifies the interface name of BGP neighbor, e.g. `vlan2`.

Mode [BGP4+] Router Configuration

Usage [BGP4+] This command is for use with BGP4+ peering. Use this command for BGP peering with IPv6 link local addresses.

Examples [BGP4+]

```
awplus# configure terminal
awplus(config)# router bgp 10
awplus(config-router)# neighbor 10.10.0.72 interface vlan2
awplus# configure terminal
awplus(config)# router bgp 10
awplus(config-router)# no neighbor 10.10.0.72 interface vlan2
awplus# configure terminal
awplus(config)# router bgp 10
awplus(config-router)# neighbor 2001:0db8:010d::1 interface
vlan2
awplus# configure terminal
awplus(config)# router bgp 10
awplus(config-router)# no neighbor 2001:0db8:010d::1 interface
vlan2
```

neighbor local-as

Overview Use this command to configure a local AS number for the specified BGP or BGP4+ neighbor. This overrides the local AS number specified by the router bgp command.

Use the **no** variant of this command to remove the local AS number for the specified BGP or BGP4+ neighbor.

Syntax

```
neighbor <neighborid> local-as <as-number>
no neighbor <neighborid> local-as <as-number>
```

Parameter	Description	
<neighborid>	{*<ip-address>* | *<ipv6-addr>* | *<peer-group>*}	
	<ip-address>	The address of an IPv4 BGP neighbor, in dotted decimal notation A.B.C.D.
	<ipv6-addr>	The address of an IPv6 BGP4+ neighbor, entered in hexadecimal in the format X:X::X:X.
	<peer-group>	Enter the name of an existing peer-group. For information on how to create peer groups, refer to the neighbor peer-group (add a neighbor) and neighbor route-map commands. When this parameter is used with this command, the command applies on all peers in the specified group.
<as-number>	*<1-4294967295>* Neighbor's Autonomous System (AS) number.	

Mode [BGP] Router Configuration or IPv4 Address Family Configuration

Mode [BGP4+] Router Configuration

When VRF-lite is configured, this command allows internal BGP loopback connections between named VRFs and the default global routing instance to be configured to act as eBGP connections, instead of only iBGP.

Usage [BGP4+] When BGP4+ is configured, this command prepends the ASN as defined by the router bgp command, and adds the ASN as defined by the neighbor local-as command in front of the actual ASN as defined by the router bgp command. This makes the peer believe it is peering with the ASN as defined by the neighbor local-as command.

Examples [BGP]

```
awplus# configure terminal
awplus(config)# router bgp 10
awplus(config-router)# neighbor 10.10.0.34 local-as 1
awplus# configure terminal
awplus(config)# router bgp 10
awplus(config-router)# no neighbor 10.10.0.34 local-as 1
awplus# configure terminal
awplus(config)# router bgp 10
awplus(config-router)# neighbor group1 peer-group
awplus(config-router)# neighbor 10.10.10.34 remote-as 10
awplus(config-router)# neighbor 10.10.10.34 peer-group group1
awplus(config-router)# neighbor group1 local-as 1
awplus# configure terminal
awplus(config)# router bgp 10
awplus(config-router)# no neighbor group1 local-as 1
```

Examples [BGP4+]

```
awplus# configure terminal
awplus(config)# router bgp 10
awplus(config-router)# neighbor 2001:0db8:010d::1 local-as 1
awplus# configure terminal
awplus(config)# router bgp 10
awplus(config-router)# no neighbor 2001:0db8:010d::1 local-as 1
awplus# configure terminal
awplus(config)# router bgp 10
awplus(config-router)# neighbor group1 peer-group
awplus(config-router)# address-family ipv6
awplus(config-router-af)# neighbor 2001:0db8:010d::1
peer-group group1
awplus(config-router-af)# exit
awplus(config-router)# neighbor group1 local-as 1
awplus# configure terminal
awplus(config)# router bgp 10
awplus(config-router)# no neighbor group1 local-as 1
```

Related Commands

neighbor peer-group (add a neighbor)

neighbor route-map

router bgp

Command changes

Version 5.4.6-2.1: VRF-lite support added.

neighbor maximum-prefix

Overview Use this command to control the number of prefixes that can be received from a BGP or a BGP4+ neighbor.

Use the **no** variant of this command to disable this function. Do not specify threshold to apply the default threshold of 75% for the maximum number of prefixes before this is applied.

Syntax

```
neighbor <neighborid> maximum-prefix <maximum>
no neighbor <neighborid> maximum-prefix [<maximum>]
```

Parameter	Description	
<neighborid>	{*<ip-address>*|*<ipv6-addr>*|*<peer-group>*}	
	<ip-address>	Specify the address of an IPv4 BGP neighbor, in dotted decimal notation A.B.C.D.
	<ipv6-addr>	Specify the address of an IPv6 BGP4+ neighbor, entered in hexadecimal in the format X:X::X:X.
	<peer-group>	Name of an existing peer-group. For information on how to create peer groups, refer to the neighbor peer-group (add a neighbor) command, and neighbor route-map command. When this parameter is used with this command, the command applies on all peers in the specified group.
<maximum>	*<maxprefix>*[*<threshold>*] [warning-only]	
<maxprefix>	*<1-4294967295>* Specifies the maximum number of prefixes permitted.	
<threshold>	*<1-100>* Specifies the threshold value, 1 to 100 percent. 75% by default.	
warning-only	Only gives a warning message when the limit is exceeded.	

Default The default threshold value is 75%. If the threshold value is not specified this default is applied.

Mode [BGP] Router Configuration or IPv4 Address Family Configuration

Mode [BGP4+] IPv6 Address Family Configuration

Usage The **neighbor maximum-prefix** command allows the configuration of a specified number of prefixes that a BGP or a BGP4+ router is allowed to receive from a neighbor. When the warning-only option is not used, if any extra prefixes are received, the router ends the peering. A terminated peer, stays down until the **clear ip bgp** command is used.

Examples [BGP]

```
awplus# configure terminal
awplus(config)# router bgp 10
awplus(config-router)# neighbor 10.10.0.72 maximum-prefix 1244
warning-only
awplus# configure terminal
awplus(config)# router bgp 10
awplus(config-router)# no neighbor 10.10.0.72 maximum-prefix
1244 warning-only
awplus# configure terminal
awplus(config)# router bgp 10
awplus(config-router)# neighbor group1 peer-group
awplus(config-router)# neighbor 10.10.10.72 remote-as 10
awplus(config-router)# neighbor 10.10.10.72 peer-group group1
awplus(config-router)# neighbor group1 maximum-prefix 1244
warning-only
awplus# configure terminal
awplus(config)# router bgp 10
awplus(config-router)# no neighbor group1 maximum-prefix 1244
warning-only
```

Examples [BGP4+]

```
awplus# configure terminal
awplus(config)# router bgp 10
awplus(config-router)# address-family ipv6
awplus(config-router-af)# neighbor 2001:0db8:010d::1
maximum-prefix 1244 warning-only
awplus# configure terminal
awplus(config)# router bgp 10
awplus(config-router)# address-family ipv6
awplus(config-router-af)# no neighbor 2001:0db8:010d::1
maximum-prefix 1244 warning-only
awplus# configure terminal
awplus(config)# router bgp 10
awplus(config-router)# neighbor group1 peer-group
awplus(config-router)# address-family ipv6
awplus(config-router-af)# neighbor 2001:0db8:010d::1
peer-group group1
awplus(config-router-af)# neighbor group1 maximum-prefix 1244
warning-only
awplus# configure terminal
awplus(config)# router bgp 10
awplus(config-router)# address-family ipv6
awplus(config-router-af)# no neighbor group1 maximum-prefix
1244 warning-only
```

Related Commands

neighbor peer-group (add a neighbor)

neighbor route-map

neighbor next-hop-self

Overview Use this command to configure the BGP or BGP4+ router as the next hop for a BGP or BGP4+ speaking neighbor or peer group.

Use the **no** variant of this command to disable this feature.

Syntax

```
neighbor <neighborid> next-hop-self
no neighbor <neighborid> next-hop-self
```

Parameter	Description	
<neighborid>	{*<ip-address>* | *<ipv6-addr>* | *<peer-group>*}	
	<ip-address>	Specify the address of an IPv4 BGP neighbor, in dotted decimal notation A.B.C.D.
	<ipv6-addr>	Specify the address of an IPv6 BGP4+ neighbor, entered in hexadecimal in the format X:X::X:X.
	<peer-group>	Enter the name of an existing peer-group. For information on how to create peer groups, refer to the neighbor peer-group (add a neighbor) command, and neighbor route-map command. When this parameter is used with this command, the command applies on all peers in the specified group.

Mode [BGP] Router Configuration or IPv4 Address Family Configuration

Mode [BGP4+] IPv6 Address Family Configuration

Usage This command allows a BGP or BGP4+ router to change the next hop information that is sent to the iBGP peer. The next hop information is set to the IP address of the interface used to communicate with the neighbor.

This command can be run for a specific VRF instance.

Examples [BGP]

```
awplus# configure terminal
awplus(config)# router bgp 10
awplus(config-router)# neighbor 10.10.0.72 next-hop-self
awplus# configure terminal
awplus(config)# router bgp 10
awplus(config-router)# no neighbor 10.10.0.72 next-hop-self
awplus# configure terminal
awplus(config)# router bgp 10
awplus(config-router)# address-family ipv4
awplus(config-router)# neighbor 10.10.0.72 next-hop-self
awplus# configure terminal
awplus(config)# router bgp 10
awplus(config-router)# address-family ipv4
awplus(config-router)# no neighbor 10.10.0.72 next-hop-self
awplus# configure terminal
awplus(config)# router bgp 10
awplus(config-router)# neighbor group1 peer-group
awplus(config-router)# neighbor 10.10.10.72 remote-as 10
awplus(config-router)# neighbor 10.10.10.72 peer-group group1
awplus(config-router)# neighbor group1 next-hop-self
awplus# configure terminal
awplus(config)# router bgp 10
awplus(config-router)# no neighbor group1 next-hop-self
```

Examples [BGP4+]

```
awplus# configure terminal
awplus(config)# router bgp 10
awplus(config-router)# address-family ipv6
awplus(config-router-af)# neighbor 2001:0db8:010d::1
next-hop-self
awplus# configure terminal
awplus(config)# router bgp 10
awplus(config-router)# address-family ipv6
awplus(config-router-af)# no neighbor 2001:0db8:010d::1
next-hop-self
awplus# configure terminal
awplus(config)# router bgp 10
awplus(config-router)# neighbor group1 peer-group
awplus(config-router)# neighbor 2001:0db8:010d::1 remote-as 10
awplus(config-router)# address-family ipv6
awplus(config-router-af)# neighbor 2001:0db8:010d::1
peer-group group1
awplus(config-router-af)# neighbor group1 next-hop-self
awplus# configure terminal
awplus(config)# router bgp 10
awplus(config-router)# address-family ipv6
awplus(config-router-af)# no neighbor group1 next-hop-self
```

Related Commands

neighbor peer-group (add a neighbor)

neighbor route-map

neighbor override-capability

Overview Use this command to override a capability negotiation result for BGP and BGP4+.

Use the **no** variant of with this command to disable this function.

Syntax

```
neighbor <neighborid> override-capability
no neighbor <neighborid> override-capability
```

Parameter	Description	
<neighborid>	{*<ip-address>*|*<ipv6-addr>*|*<peer-group>*}	
	<ip-address>	Specify the address of an IPv4 BGP neighbor, in dotted decimal notation A.B.C.D.
	<ipv6-addr>	Specify the address of an IPv6 BGP4+ neighbor, entered in hexadecimal in the format X:X::X:X.
	<peer-group>	Enter the name of an existing peer-group. For information on how to create peer groups, refer to the neighbor peer-group (add a neighbor) command, and neighbor route-map command. When this parameter is used with this command, the command applies on all peers in the specified group.

Mode Router Configuration

Examples [BGP]

```
awplus# configure terminal
awplus(config)# router bgp 10
awplus(config-router)# neighbor 10.10.0.72 override-capability
awplus# configure terminal
awplus(config)# router bgp 10
awplus(config-router)# no neighbor 10.10.0.72
override-capability
awplus# configure terminal
awplus(config)# router bgp 10
awplus(config-router)# neighbor group1 peer-group
awplus(config-router)# neighbor 10.10.10.72 remote-as 10
awplus(config-router)# neighbor 10.10.10.72 peer-group group1
awplus(config-router)# neighbor group1 override-capability
awplus# configure terminal
awplus(config)# router bgp 10
awplus(config-router)# no neighbor group1 override-capability
```

Examples [BGP4+]

```
awplus# configure terminal
awplus(config)# router bgp 12
awplus(config-router)# neighbor 2001:0db8:010d::1
override-capability
awplus# configure terminal
awplus(config)# router bgp 12
awplus(config-router)# no neighbor 2001:0db8:010d::1
override-capability
awplus# configure terminal
awplus(config)# router bgp 12
awplus(config-router)# neighbor group1 peer-group
awplus(config-router)# neighbor 2001:0db8:010d::1 remote-as 10
awplus(config-router)# address-family ipv6
awplus(config-router-af)# neighbor 2001:0db8:010d::1
peer-group group1
awplus(config-router-af)# exit
awplus(config-router)# neighbor group1 override-capability
awplus# configure terminal
awplus(config)# router bgp 12
awplus(config-router)# no neighbor group1 override-capability
```

Related Commands

neighbor peer-group (add a neighbor)

neighbor route-map

neighbor passive

Overview Use this command to configure the local BGP or BGP4+ router to be passive with regard to the specified BGP or BGP4+ neighbor. This has the effect that the BGP or BGP4+ router will not attempt to initiate connections to this BGP or BGP4+ neighbor, but will accept incoming connection attempts from the BGP or BGP4+ neighbor.

Use the **no** variant of this command to disable this function.

Syntax

```
neighbor <neighborid> passive
no neighbor <neighborid> passive
```

Parameter	Description	
<neighborid>	{*<ip-address>* | *<ipv6-addr>* | *<peer-group>*}	
	<ip-address>	Specify the address of an IPv4 BGP neighbor, in dotted decimal notation A.B.C.D.
	<ipv6-addr>	Specify the address of an IPv6 BGP4+ neighbor, entered in hexadecimal in the format X:X::X:X.
	<peer-group>	Enter the name of an existing peer-group. For information on how to create peer groups, refer to the neighbor peer-group (add a neighbor) command, and neighbor route-map command. When this parameter is used with this command, the command applies on all peers in the specified group.

Mode [BGP] Router Configuration or IPv4 Address Family Configuration

Mode [BGP4+] Router Configuration

Examples [BGP]

```
awplus# configure terminal
awplus(config)# router bgp 10
awplus(config-router)# neighbor 10.10.0.72 passive
awplus# configure terminal
awplus(config)# router bgp 10
awplus(config-router)# no neighbor 10.10.0.72 passive
awplus# configure terminal
awplus(config)# router bgp 10
awplus(config-router)# neighbor group1 peer-group
awplus(config-router)# neighbor 10.10.10.72 remote-as 10
awplus(config-router)# neighbor 10.10.10.72 peer-group group1
awplus(config-router)# neighbor group1 passive
awplus# configure terminal
awplus(config)# router bgp 10
awplus(config-router)# no neighbor group1 passive
```

Examples [BGP4+]

```
awplus# configure terminal
awplus(config)# router bgp 10
awplus(config-router)# neighbor 2001:0db8:010d::1 passive
awplus# configure terminal
awplus(config)# router bgp 10
awplus(config-router)# no neighbor 2001:0db8:010d::1 passive
awplus# configure terminal
awplus(config)# router bgp 10
awplus(config-router)# neighbor group1 peer-group
awplus(config-router)# neighbor 2001:0db8:010d::1 remote-as 10
awplus(config-router)# address-family ipv6
awplus(config-router-af)# neighbor 2001:0db8:010d::1
peer-group group1
awplus(config-router-af)# exit
awplus(config-router)# neighbor group1 passive
awplus# configure terminal
awplus(config)# router bgp 10
awplus(config-router)# no neighbor group1 passive
```

Related Commands

neighbor peer-group (add a neighbor)

neighbor route-map

neighbor password

Overview Use this command to enable MD5 authentication on a TCP connection between BGP and BGP4+ neighbors. No authentication is applied by default. To setup authentication for the session, you must first apply authentication on each connected peer for the session.

Use the **no** variant of this command to disable this function.

Syntax [BGP]

```
neighbor {<ip-address>|<peer-group-name>} password <password>
no neighbor {<ip-address>|<peer-group-name>} password
[<password>]
```

Syntax [BGP4+]

```
neighbor {<ipv6-addr>|<peer-group-name>} password <password>
no neighbor {<ipv6-addr>|<peer-group-name>} password
[<password>]
```

Parameter	Description
<ip-address>	Specifies the IP address of the BGP neighbor, in A.B.C.D format.
<ipv6-addr>	Specifies the IPv6 address of the BGP4+ neighbor, entered in hexadecimal in the format X:X::X:X.
<peer-group-name>	Name of an existing peer-group. When this parameter is used with this command, the command applies on all peers in the specified group.
<password>	An alphanumeric string of characters to be used as password.

Default No authentication is applied by default.

Mode [BGP] Router Configuration or IPv4 Address Family Configuration

Mode [BGP4+] Router Configuration

Usage When using the *<peer-group-name>* parameter with this command (to apply this command to all peers in the group), see the related commands neighbor peer-group (add a neighbor) and neighbor route-map for information about how to create peer groups first.

Examples [BGP] This example specifies the encryption type and the password 'manager' for the neighbor `10.10.10.1`:

```
awplus# configure terminal
awplus(config)# router bgp 10
awplus(config-router)# neighbor 10.10.10.1 password manager
```

This example removes the password set for the neighbor `10.10.10.1`:

```
awplus# configure terminal
awplus(config)# router bgp 10
awplus(config-router)# no neighbor 10.10.10.1 password
```

This example specifies the encryption type and the password 'manager' for the neighbor peer group named 'group1':

```
awplus# configure terminal
awplus(config)# router bgp 10
awplus(config-router)# neighbor group1 peer-group
awplus(config-router)# neighbor 10.10.10.1 remote-as 10
awplus(config-router)# neighbor 10.10.10.1 peer-group group1
awplus(config-router)# neighbor group1 password manager
```

This example removes the password set for the neighbor peer group named `group1`:

```
awplus# configure terminal
awplus(config)# router bgp 10
awplus(config-router)# no neighbor group1 password
```

Examples (VRF-lite)

This example specifies the password ('manager') for the neighbor peer group named 'group1' for an IPv4 address-family VRF instance name 'red', and router bgp 10:

```
awplus# configure terminal
awplus(config)# router bgp 10
awplus(config-router)# address-family ipv4 vrf red
awplus(config-router-af)# neighbor 10.10.10.1 password manager
```

This example removes the password ('manager') for the neighbor peer group named 'group1' for an IPv4 address-family, VRF instance name 'red', and router bgp 10:

```
awplus# configure terminal
awplus(config)# router bgp 10
awplus(config-router)# address-family ipv4 vrf red
awplus(config-router-af)# no neighbor 10.10.10.1 password
manager
```

This example specifies the password ('manager') for the neighbor peer group named 'group1' for an IPv4 address-family, VRF instance name 'red', and router bgp 10:

```
awplus# configure terminal
awplus(config)# router bgp 10
awplus(config-router)# neighbor group1 peer-group
awplus(config-router)# neighbor 10.10.10.1 remote-as 10
awplus(config-router)# neighbor 10.10.10.1 peer-group group1
awplus(config-router)# address-family ipv4 vrf red
awplus(config-router-af)# neighbor group1 password manager
```

Examples [BGP4+]

This example specifies the encryption type and the password 'manager' for the neighbor `2001:0db8:010d::1`:

```
awplus# configure terminal
awplus(config)# router bgp 10
awplus(config-router)# neighbor password manager
2001:0db8:010d::1
```

This example removes the password set for the neighbor `2001:0db8:010d::1`:

```
awplus# configure terminal
awplus(config)# router bgp 10
awplus(config-router)# no neighbor password 2001:0db8:010d::1
```

This example specifies the encryption type and the password 'manager' for the neighbor peer group named `group1`:

```
awplus# configure terminal
awplus(config)# router bgp 10
awplus(config-router)# neighbor group1 peer-group
awplus(config-router)# neighbor  remote-as 102001:0db8:010d::1
awplus(config-router)# address-family ipv6
awplus(config-router-af)# neighbor peer-group group1
2001:0db8:010d::1
awplus(config-router-af)# exit
awplus(config-router)# neighbor group1 password manager
```

This example removes the password set for the neighbor peer group named 'group1':

```
awplus# configure terminal
awplus(config)# router bgp 10
awplus(config-router)# no neighbor group1 password
```

Related Commands

neighbor peer-group (add a neighbor)

neighbor route-map

Command changes Version 5.4.6-2.1: VRF-lite support added.

neighbor peer-group (add a neighbor)

Overview Use this command to add a BGP or a BGP4+ neighbor to an existing peer-group.

Use the **no** variant of this command to disable this function.

Syntax [BGP]

```
neighbor <ip-address> peer-group <peer-group>
no neighbor <ip-address> peer-group <peer-group>
```

Syntax [BGP4+]

```
neighbor <ipv6-addr> peer-group <peer-group>
no neighbor <ipv6-addr> peer-group <peer-group>
```

Parameter	Description
<ip-address>	Specify the IPv4 address of the BGP neighbor, entered in the format A.B.C.D.
<ipv6-addr>	Specify the IPv6 address of the BGP4+ neighbor, entered in hexadecimal in the format X:X::X:X.
<peer-group>	Enter the name of the peer-group. When this parameter is used with this command, the command applies on all peers in the specified group.

Mode [BGP] Router Configuration or IPv4 Address Family Configuration

Mode [BGP4+] IPv6 Address Family Configuration

Usage Use this command to add neighbors with the same update policies to a peer group. This facilitates the updates of various policies, such as, distribute and filter lists. The peer-group is then configured easily with many of the neighbor commands. Any changes made to the peer group affect all members.

To create a peer-group use the neighbor port command and then use this command to add neighbors to the group.

Examples [BGP] This example shows a new peer-group `group1` and the addition of a neighbor `10.10.0.63` to the group.

```
awplus# configure terminal
awplus(config)# router bgp 10
awplus(config-router)# neighbor group1 peer-group
awplus(config-router)# neighbor 10.10.0.63 peer-group group1
```

This example shows a new peer-group `group1` and the removal of a neighbor `10.10.0.63` to the group.

```
awplus# configure terminal
awplus(config)# router bgp 10
awplus(config-router)# neighbor group1 peer-group
awplus(config-router)# no neighbor 10.10.0.63 peer-group group1
```

Examples [BGP4+]

This example shows a new peer-group `group1` and the addition of a neighbor `2001:0db8:010d::1` to the group.

```
awplus# configure terminal
awplus(config)# router bgp 10
awplus(config-router)# neighbor group1 peer-group
awplus(config-router)# address-family ipv6
awplus(config-router-af)# neighbor  peer-group
group12001:0db8:010d::1
```

This example shows a new peer-group `group1` and the removal of a neighbor `2001:0db8:010d::1` to the group.

```
awplus# configure terminal
awplus(config)# router bgp 10
awplus(config-router)# neighbor group1 peer-group
awplus(config-router)# address-family ipv6
awplus(config-router-af)# no neighbor  peer-group
group12001:0db8:010d::1
```

Related Commands

neighbor peer-group (create a peer-group)

neighbor port

neighbor peer-group (create a peer-group)

Overview Use this command to create a peer-group for BGP and BGP4+.

Use the **no** variant of this command to disable this function.

Syntax

```
neighbor <peer-group> peer-group
no neighbor <peer-group> peer-group
```

Parameter	Description
<peer-group>	Enter the name of the peer-group.

Mode [BGP] Router Configuration or IPv4 Address Family Configuration

Mode [BGP4+] Router Configuration

Usage Neighbors with the same update policies are grouped into peer groups. This facilitates the updates of various policies, such as, distribute and filter lists.

The peer-group is then configured easily with many of the neighbor commands. Any changes made to the peer group affect all members.

Use this command to create a peer-group, then use the neighbor peer-group (add a neighbor) command to add neighbors to the group.

Examples

```
awplus# configure terminal
awplus(config)# router bgp 10
awplus(config-router)# neighbor group1 peer-group
awplus# configure terminal
awplus(config)# router bgp 10
awplus(config-router)# no neighbor group1 peer-group
```

Related Commands neighbor peer-group (add a neighbor)

neighbor port

Overview Use this command to specify the TCP port to which packets are sent to on a BGP or a BGP4+ neighbor. TCP port 179 is the default port used to connect BGP and BGP4+ peers. You can specify a different destination port for the TCP session with this command.

Use the **no** variant of this command to reset the port number back to the default value (TCP port 179).

Syntax [BGP]

```
neighbor <neighborid> port <portnum>
no neighbor <neighborid> port [<portnum>]
```

Parameter	Description	
<neighborid>	{*<ip-address>* | *ipv6-addr>* | *<peer-group>*}	
	<ip-address>	Specify the address of an IPv4 BGP neighbor, in dotted decimal notation A.B.C.D.
	<ipv6-addr>	Specify the address of an IPv6 BGP4+ neighbor, entered in hexadecimal in the format X:X::X:X.
	<peer-group>	Enter the name of an existing peer-group. For information on how to create peer groups, refer to the neighbor peer-group (add a neighbor) command, and neighbor route-map command. When this parameter is used with this command, the command applies on all peers in the specified group.
<portnum>	*<0-65535>* Specifies the TCP port number.	

Default TCP port 179 is the default port used to connect BGP and BGP4+ peers.

Mode [BGP] Router Configuration or IPv4 Address Family Configuration

Mode [BGP4+] Router Configuration

Examples [BGP]

```
awplus# configure terminal
awplus(config)# router bgp 12
awplus(config-router)# neighbor 10.10.10.10 port 643
awplus# configure terminal
awplus(config)# router bgp 12
awplus(config-router)# no neighbor 10.10.10.10 port 643
awplus# configure terminal
awplus(config)# router bgp 12
awplus(config-router)# neighbor group1 peer-group
awplus(config-router)# neighbor 10.10.10.1 remote-as 10
awplus(config-router)# neighbor 10.10.10.1 peer-group group1
awplus(config-router)# neighbor group1 port 643
awplus# configure terminal
awplus(config)# router bgp 12
awplus(config-router)# no neighbor group1 port 643
```

Examples [BGP4+]

```
awplus# configure terminal
awplus(config)# router bgp 12
awplus(config-router)# neighbor  port 6432001:0db8:010d::1
awplus# configure terminal
awplus(config)# router bgp 12
awplus(config-router)# no neighbor  port 6432001:0db8:010d::1
awplus# configure terminal
awplus(config)# router bgp 12
awplus(config-router)# neighbor group1 peer-group
awplus(config-router)# neighbor 2001:0db8:010d::1 remote-as 10
awplus(awplus-router)# address-family ipv6
awplus(config-router-af)# neighbor 2001:0db8:010d::1
peer-group group1
awplus(config-router-af)# exit
awplus(config-router)# neighbor group1 port 643
awplus# configure terminal
awplus(config)# router bgp 12
awplus(config-router)# no neighbor group1 port 643
```

Related Commands

neighbor peer-group (add a neighbor)

neighbor route-map

neighbor prefix-list

Overview Use this command to distribute BGP and BGP4+ neighbor information as specified in a prefix list.

Use the **no** variant of this command to remove an entry.

Syntax

```
neighbor <neighborid> prefix-list <listname> {in|out}
no neighbor <neighborid> prefix-list <listname> {in|out}
```

Parameter	Description	
<neighborid>	*<ip-address>*|*<ipv6-addr>*|{*<peer-group>*}	
	<ip-address>	Specify the address of an IPv4 BGP neighbor, in dotted decimal notation A.B.C.D.
	<ipv6-addr>	Specify the address of an IPv6 BGP4+ neighbor, entered in hexadecimal in the format X:X::X:X.
	<peer-group>	Enter the name of an existing peer-group. For information on how to create peer groups, refer to the neighbor peer-group (add a neighbor) command, and neighbor route-map command. When this parameter is used with this command, the command applies on all peers in the specified group.
<listname>	The name of an IP prefix list.	
in	Specifies that the IP prefix list applies to incoming advertisements.	
out	Specifies that the IP prefix list applies to outgoing advertisements.	

Mode [BGP] Router Configuration or IPv4 Address Family Configuration

Mode [BGP4+] IPv6 Address Family Configuration

Usage Use this command to specify a prefix list for filtering BGP or BGP4+ advertisements. Filtering by prefix list matches the prefixes of routes with those listed in the prefix list. If there is a match, the route is used. An empty prefix list permits all prefixes. If a given prefix does not match any entries of a prefix list, the route is denied access.

The router begins the search at the top of the prefix list, with the sequence number 1. Once a match or deny occurs, the router does not need to go through the rest of the prefix list. For efficiency the most common matches or denies are listed at the top.

The **neighbor distribute-list** command is an alternative to the **neighbor prefix-list** command and only one of them can be used for filtering to the same neighbor in any direction.

Examples [BGP]

```
awplus# configure terminal
awplus(config)# ip prefix-list list1 deny 30.0.0.0/24
awplus(config)# router bgp 10
awplus(config-router)# neighbor 10.10.10.1 prefix-list list1 in
awplus# configure terminal
awplus(config)# router bgp 10
awplus(config-router)# no neighbor 10.10.10.1 prefix-list list1
in
awplus# configure terminal
awplus(config)# ip prefix-list list1 deny 30.0.0.0/24
awplus(config)# router bgp 10
awplus(config-router)# address-family ipv4
awplus(config-router-af)# neighbor 10.10.10.1 prefix-list list1
in
awplus# configure terminal
awplus(config)# router bgp 10
awplus(config-router)# address-family ipv4
awplus(config-router-af)# no neighbor 10.10.10.1 prefix-list
list1 in
awplus# configure terminal
awplus(config)# ip prefix-list list1 deny 30.0.0.0/24
awplus(config)# router bgp 10
awplus(config-router)# neighbor group1 peer-group
awplus(config-router)# neighbor 10.10.10.1 remote-as 10
awplus(config-router)# neighbor 10.10.10.1 peer-group group1
awplus(config-router)# neighbor group1 prefix-list list1 in
awplus# configure terminal
awplus(config)# router bgp 10
awplus(config-router)# no neighbor group1 prefix-list list1 in
```

Examples [BGP4+]

```
awplus# configure terminal
awplus(config)# ipv6 prefix-list list1 deny
2001:0db8:010d::1/128
awplus(config)# router bgp 10
awplus(config-router)# address-family ipv6
awplus(config-router-af)# neighbor 2001:0db8:: prefix-list
list1 in
awplus# configure terminal
awplus(config)# router bgp 10
awplus(config-router)# address-family ipv6
awplus(config-router-af)# no neighbor 2001:0db8:: prefix-list
list1 in
awplus# configure terminal
awplus(config)# ip prefix-list list1 deny 2001:0db8:010d::1/128
awplus(config)# router bgp 10
awplus(config-router)# neighbor group1 peer-group
awplus(config-router)# neighbor 2001:0db8:010d::1 remote-as 10
awplus(config-router)# address-family ipv6
awplus(config-router-af)# neighbor 2001:0db8:010d::1
peer-group group1
awplus(config-router-af)# neighbor group1 prefix-list list1 in
awplus# configure terminal
awplus(config)# router bgp 10
awplus(config-router)# address-family ipv6
awplus(config-router-af)# no neighbor group1 prefix-list list1
in
```

Related Commands

ip prefix-list (IPv4 Prefix List)

neighbor peer-group (add a neighbor)

neighbor route-map

neighbor remote-as

Overview Use this command to configure an internal or external BGP or BGP4+ (iBGP or eBGP) peering relationship with another router.

Use the **no** variant of this command to remove a previously configured BGP or BGP4+ peering relationship.

Syntax

```
neighbor <neighborid> remote-as <as-number>
no neighbor <neighborid> remote-as <as-number>
```

Syntax (VRF- lite)

```
neighbor <neighborid> remote-as <as-number> [global|vrf
<vrf-name>]
no neighbor <neighborid> remote-as <as-number>
```

Parameter	Description	
<neighborid>	{*<ip-address>* | *ipv6-addr>* | *<peer-group>*}	
	<ip-address>	Specify the address of an IPv4 BGP neighbor, in dotted decimal notation A.B.C.D.
	<ipv6-addr>	Specify the address of an IPv6 BGP4+ neighbor, entered in hexadecimal in the format X:X::X:X.
	<peer-group>	Enter the name of an existing peer-group. For information on how to create peer groups, refer to the neighbor peer-group (add a neighbor) command, and neighbor route-map command. When this parameter is used with this command, the command applies on all peers in the specified group.
<as-number>	*<1-4294967295>* Neighbor's Autonomous System (AS) number.	
global	Specify that the remote neighbor exists locally within the device, in the global routing domain	
vrf	Specify that the remote neighbor exists locally within the device, in the specified VRF instance.	
<vrf-name>	The name of the VRF instance.	

Mode [BGP] Router Configuration or IPv4 Address Family Configuration

Mode [BGP4+] Router Configuration

Usage This command is used to configure iBGP and eBGP peering relationships with other BGP or BGP4+ neighbors. A peer-group support of this command is configured only after creating a specific peer-group. Use the **no** variant of this command to remove a previously configured BGP peering relationship.

The **vrf** and **global** parameters are used to create internal 'loopback' BGP connections within the device between two VRF instances. This is used to leak BGP routes between a named VRF instance and the global routing instance. This requires BGP neighbors to be configured in both the global routing instance and in the named VRF instance.

Examples [BGP] To configure a BGP peering relationship from the neighbor with the IPv4 address 10.10.0.73 with another router:

```
awplus# configure terminal
awplus(config)# router bgp 10
awplus(config-router)# neighbor 10.10.0.73 remote-as 10
```

To remove a configured BGP peering relationship from the neighbor with the IPv4 address 10.10.0.73 from another router:

```
awplus# configure terminal
awplus(config)# router bgp 10
awplus(config-router)# no neighbor 10.10.0.73 remote-as 10
```

To configure a BGP peering relationship from the neighbor with the peer group named group1 with another router:

```
awplus# configure terminal
awplus(config)# router bgp 10
awplus(config-router)# neighbor group1 peer-group
awplus(config-router)# neighbor 10.10.10.1 remote-as 10
awplus(config-router)# neighbor 10.10.10.1 peer-group group1
awplus(config-router)# neighbor group1 remote-as 10
```

To remove a configured BGP peering relationship from the neighbor with the peer group named group1 with another router:

```
awplus# configure terminal
awplus(config)# router bgp 10
awplus(config-router)# no neighbor group1 remote-as 10
```

Examples [BGP4+] To configure a BGP4+ peering relationship with another router:

```
awplus# configure terminal
awplus(config)# router bgp 11
awplus(config-router)# neighbor 2001:0db8:010d::1 remote-as 345
```

To remove a configured BGP4+ peering relationship from another router:

```
awplus# configure terminal
awplus(config)# router bgp 11
awplus(config-router)# no neighbor 2001:0db8:010d::1 remote-as
345
```

To configure a BGP4+ peering relationship from the neighbor with the peer group named group1 with another router:

```
awplus# configure terminal
awplus(config)# router bgp 10
awplus(config-router)# neighbor group1 peer-group
awplus(config-router)# neighbor 2001:0db8:010d::1 remote-as 10
awplus(config-router)# address-family ipv6
awplus(config-router-af)# neighbor 2001:0db8:010d::1
peer-group group1
awplus(config-router-af)# exit
awplus(config-router)# neighbor group1 remote-as 10
```

To remove a configured BGP4+ peering relationship from the neighbor with the peer group named group1 with another router:

```
awplus# configure terminal
awplus(config)# router bgp 10
awplus(config-router)# no neighbor group1 remote-as 10
```

Command changes

Version 5.4.6-2.1: VRF-lite support added.

neighbor remove-private-AS (BGP only)

Overview Use this command to remove the private Autonomous System (AS) number from external outbound updates. Use the **no** variant of this command to revert to the default (disabled).

Syntax

```
neighbor <neighborid> remove-private-AS
no neighbor <neighborid> remove-private-AS
```

Parameter	Description	
<neighborid>	{*<ip-address>*|*<tag>*}	
	<ip-address>	The address of an IPv4 BGP neighbor, in dotted decimal notation A.B.C.D.
	<tag>	Name of an existing peer-group. For information on how to create peer groups, refer to the neighbor peer-group (add a neighbor) command, and neighbor remote-as command. When this parameter is used with a command, the command applies on all peers in the specified group.

Default This command is disabled by default.

Mode Router Configuration or IPv4 Address Family Configuration

Usage The private AS numbers range from <64512-65535>. Private AS numbers are not advertised to the Internet. This command is used with external BGP peers only. The router removes the AS numbers only if the update includes private AS numbers. If the update includes both private and public AS numbers, the system treats it as an error.

This command removes private AS numbers for BGP in Router Configuration mode. This command is not supported for BGP4+ in IPv6 Address Family Configuration mode. This command removes a private AS number and makes an update packet with a public AS number as the AS path attribute. So only public AS numbers are entered in Internet BGP routing tables, and private AS numbers are not entered in Internet BGP tables.

For the filtering to apply, both peering devices must be set to use either 2-byte or extended 4- byte ASN (with the same ASN type set on both peers). For example, if a device (which defaults to use a 4-byte ASN), is peered with a device that defaults to a 2-byte ASN, then the device using a 2-byte ASN device also needs to be configured with the command **bgp extended-asn-cap** for the filtering to apply.

Examples

```
awplus# configure terminal
awplus(config)# router bgp 10
awplus(config-router)# neighbor 10.10.0.63 remove-private-AS
awplus# configure terminal
awplus(config)# router bgp 10
awplus(config-router)# no neighbor 10.10.0.63 remove-private-AS
```

Related Commands

show ip bgp (BGP only)

neighbor restart-time

Overview Use this command to set a different restart-time other than the global restart-time configured using the **bgp graceful-restart** command for BGP and BGP4+.

Use the **no** variant of this command to restore the device to its default state (see the default value of the **bgp graceful-restart** command).

Syntax

```
neighbor <neighborid> restart-time <delay-value>
no neighbor <neighborid> restart-time <delay-value>
```

Parameter	Description	
<neighborid>	{*<ip-address>* | *<ipv6-addr>* | *<peer-group>*}	
	<ip-address>	Specify the address of an IPv4 BGP neighbor, in dotted decimal notation A.B.C.D.
	<ipv6-addr>	Specify the address of an IPv6 BGP4+ neighbor, entered in hexadecimal in the format X:X::X:X.
	<peer-group>	Enter the name of an existing peer-group. For information on how to create peer groups, refer to the neighbor peer-group (add a neighbor) command, and neighbor route-map command. When this parameter is used with this command, the command applies on all peers in the specified group.
<delay-value>	*<1-3600>*	Delay value in seconds.

Mode [BGP] Router Configuration or IPv4 Address Family Configuration

Mode [BGP4+] Router Configuration

Usage This command takes precedence over the restart-time value specified using the **bgp graceful-restart** command.

The restart-time value is the maximum time that a graceful-restart neighbor waits to come back up after a restart. The default is 120 seconds.

Make sure that the restart time specified using this command does not exceed the stalepath-time specified in the Router Configuration mode.

Examples [BGP]

```
awplus# configure terminal
awplus(config)# router bgp 10
awplus(config-router)# neighbor 10.10.10.1 restart-time 45
awplus# configure terminal
awplus(config)# router bgp 10
awplus(config-router)# no neighbor 10.10.10.1 restart-time 45
awplus# configure terminal
awplus(config)# router bgp 10
awplus(config-router)# neighbor group1 peer-group
awplus(config-router)# neighbor 10.10.10.1 remote-as 10
awplus(config-router)# neighbor 10.10.10.1 peer-group group1
awplus(config-router)# neighbor group1 restart-time 45
awplus# configure terminal
awplus(config)# router bgp 10
awplus(config-router)# no neighbor group1 restart-time 45
```

Examples [BGP4+]

```
awplus# configure terminal
awplus(config)# router bgp 10
awplus(config-router)# neighbor 2001:0db8:010d::1 restart-time
45
awplus# configure terminal
awplus(config)# router bgp 10
awplus(config-router)# no neighbor 2001:0db8:010d::1
restart-time 45
awplus# configure terminal
awplus(config)# router bgp 10
awplus(config-router)# neighbor group1 peer-group
awplus(config-router)# neighbor 2001:0db8:010d::1 remote-as 10
awplus(config-router)# address-family ipv6
awplus(config-router-af)# neighbor 2001:0db8:010d::1
peer-group group1
awplus(config-router-af)# exit
awplus(config-router)# neighbor group1 restart-time 45
awplus# configure terminal
awplus(config)# router bgp 10
awplus(config-router)# no neighbor group1 restart-time 45
```

Related Commands

bgp graceful-restart

neighbor peer-group (add a neighbor)

neighbor route-map

neighbor route-map

Overview Use this command to apply a route map to incoming or outgoing routes for BGP or BGP4+.

Use the **no** variant of this command to remove a route map from a BGP or BGP4+ route.

Syntax

```
neighbor <neighborid> route-map <mapname> {in|out}
no neighbor <neighborid> route-map <mapname> {in|out}
```

Parameter	Description	
<neighborid>	{*<ip-address>* | *ipv6-addr*> | *<peer-group>*}	
	<ip-address>	Specify the address of an IPv4 BGP neighbor, in dotted decimal notation A.B.C.D.
	<ipv6-addr>	Specify the address of an IPv6 BGP4+ neighbor, entered in hexadecimal in the format X:X::X:X.
	<peer-group>	Enter the name of an existing peer-group. For information on how to create peer groups, refer to the neighbor peer-group (add a neighbor) command, and neighbor route-map command. When this parameter is used with this command, the command applies on all peers in the specified group.
<mapname>	Specifies name of the route-map.	
in	Specifies that the access list applies to incoming advertisements.	
out	Specifies that the access list applies to outgoing advertisements.	

Mode [BGP] Router Configuration or IPv4 Address Family Configuration

Mode [BGP4+] IPv6 Address Family Configuration

Usage Use the **neighbor route-map** command to filter updates and modify attributes. A route map is applied to inbound or outbound updates. Only the routes that pass the route map are sent or accepted in updates.

Examples [BGP] The following example shows the configuration of the route-map name **rmap2** and then the use of this map name in the **neighbor route-map** command for the neighbor with the IPv4 address 10.10.10.1 in the Router Configuration mode.

```
awplus# configure terminal
awplus(config)# route-map rmap2 permit 6
awplus(config-route-map)# match origin incomplete
awplus(config-route-map)# set metric 100
awplus(config-route-map)# exit
awplus(config)# router bgp 10
awplus(config-router)# neighbor 10.10.10.1 route-map rmap2 in
```

The following example shows the removal of the route-map name **rmap2** in the **neighbor route-map** command for the neighbor with the IPv4 address 10.10.10.1 in the Router Configuration mode.

```
awplus# configure terminal
awplus(config)# router bgp 10
awplus(config-router)# no neighbor 10.10.10.1 route-map rmap2
in
```

The following example shows the configuration of the route-map name **rmap2** and then the use of this map name in the **neighbor route-map** command for the neighbor with the IPv4 address 10.10.10.1 in the IPv4 Address Family Configuration mode.

```
awplus# configure terminal
awplus(config)# route-map rmap2 permit 6
awplus(config-route-map)# match origin incomplete
awplus(config-route-map)# set metric 100
awplus(config-route-map)# exit
awplus(config)# router bgp 10
awplus(config-router)# address-family ipv4
awplus(config-router-af)# neighbor 10.10.10.1 route-map rmap2
in
```

The following example shows the removal of the route-map name **rmap2** in the **neighbor route-map** command for the neighbor with the IPv4 address 10.10.10.1 in the IPv4 Address Family Configuration mode.

```
awplus# configure terminal
awplus(config)# router bgp 10
awplus(config-router)# address-family ipv4
awplus(config-router-af)# no neighbor 10.10.10.1 route-map
rmap2 in
```

The following example shows the configuration of the route-map name **rmap2** and then the use of this map name in the **neighbor route-map** command for the neighbor with the peer group named group1 in the Router Configuration mode.

```
awplus# configure terminal
awplus(config)# route-map rmap2 permit 6
awplus(config-route-map)# match origin incomplete
awplus(config-route-map)# set metric 100
awplus(config-route-map)# exit
awplus(config)# router bgp 10
awplus(config-router)# neighbor group1 peer-group
awplus(config-router)# neighbor 10.10.10.1 remote-as 10
awplus(config-router)# neighbor 10.10.10.1 peer-group group1
awplus(config-router)# neighbor group1 route-map rmap2 in
```

The following example shows the removal the route-map name **rmap2** in the **neighbor route-map** command for the neighbor with the peer group named group1 in the Router Configuration mode.

```
awplus# configure terminal
awplus(config)# router bgp 10
awplus(config-router)# no neighbor group1 route-map rmap2 in
```

Examples [BGP4+]

The following example shows the configuration of the route-map name **rmap2** and then the use of this map name in the **neighbor route-map** command for the neighbor with the IPv6 address 2001:0db8:010d::1 in the IPv6 Address Family Configuration mode.

```
awplus# configure terminal
awplus(config)# route-map rmap2 permit 6
awplus(config-route-map)# match origin incomplete
awplus(config-route-map)# set metric 100
awplus(config-route-map)# exit
awplus(config)# router bgp 10
awplus(config-router)# address-family ipv6
awplus(config-router-af)# neighbor 2001:0db8:010d::1 route-map
rmap2 in
```

The following example shows the removal of the route-map name **rmap2** in the **neighbor route-map** command for the neighbor with the IPv6 address 2001:0db8:010d::1 in the IPv6 Address Family Configuration mode.

```
awplus# configure terminal
awplus(config)# router bgp 10
awplus(config-router)# address-family ipv6
awplus(config-router-af)# no neighbor 2001:0db8:010d::1
route-map rmap2 in
```

The following example shows the configuration of the route-map name **rmap2** and then the use of this map name in the **neighbor route-map** command for the neighbor with the peer group named group1 in the Router Configuration mode.

```
awplus# configure terminal
awplus(config)# route-map rmap2 permit 6
awplus(config-route-map)# match origin incomplete
awplus(config-route-map)# set metric 100
awplus(config-route-map)# exit
awplus(config)# router bgp 10
awplus(config-router)# neighbor group1 peer-group
awplus(config-router)# neighbor 2001:0db8:010d::1 remote-as 10
awplus(config-router)# address-family ipv6
awplus(config-router-af)# neighbor 2001:0db8:010d::1
peer-group group1
awplus(config-router-af)# neighbor group1 route-map rmap2 in
```

The following example shows the removal the route-map name **rmap2** in the **neighbor route-map** command for the neighbor with the peer group named group1 in the Router Configuration mode.

```
awplus# configure terminal
awplus(config)# router bgp 10
awplus(config-router)# address-family ipv6
awplus(config-router-af)# no neighbor group1 route-map rmap2 in
```

Related Commands

address-family

neighbor peer-group (add a neighbor)

route-map

neighbor route-reflector-client (BGP only)

Overview Use this command to configure the router as a BGP route reflector and configure the specified neighbor as its client.

Use the **no** variant of this command to indicate that the neighbor is not a client.

Syntax

```
neighbor <neighborid> route-reflector-client
no neighbor <neighborid> route-reflector-client
```

Parameter	Description	
<neighborid>	{*<ip-address>*|*<peer-group>*}	
	<ip-address>	The address of an IPv4 BGP neighbor, in dotted decimal notation A.B.C.D.
	<peer-group>	Enter the name of an existing peer-group. For information on how to create peer groups, refer to the neighbor peer-group (add a neighbor) command, and neighbor route-map command. When this parameter is used with this command, the command applies on all peers in the specified group.

Mode Router Configuration or IPv4 Address Family Configuration

Usage Route reflectors are a solution for the explosion of iBGP peering within an autonomous system. By route reflection the number of iBGP peers within an AS is reduced. Use the **neighbor route-reflector-client** command to configure the local router as the route reflector and specify neighbors as its client.

An AS can have more than one route reflector. One route reflector treats the other route reflector as another iBGP speaker.

In the following configuration, Router1 is the route reflector for clients `3.3.3.3` and `2.2.2.2`; it also has a non-client peer `6.6.6.6`:

```
Router1#
router bgp 200
neighbor 3.3.3.3 remote-as 200
neighbor 3.3.3.3 route-reflector-client
neighbor 2.2.2.2 remote-as 200
neighbor 2.2.2.2 route-reflector-client
neighbor 6.6.6.6 remote-as 200
```

Examples

```
awplus# configure terminal
awplus(config)# router bgp 10
awplus(config-router)# neighbor 10.10.0.72
route-reflector-client
awplus# configure terminal
awplus(config)# router bgp 10
awplus(config-router)# no neighbor 10.10.0.72
route-reflector-client
```

neighbor route-server-client (BGP only)

Overview Use this command to specify the peer as route server client.

Use the **no** variant of this command to disable this function.

Syntax

```
neighbor <neighborid> route-server-client
no neighbor <neighborid> route-server-client
```

Parameter	Description	
<neighborid>	{*<ip-address>*|*<peer-group>*}	
	<ip-address>	The address of an IPv4 BGP neighbor, in dotted decimal notation A.B.C.D.
	<peer-group>	Enter the name of an existing peer-group. For information on how to create peer groups, refer to the neighbor peer-group (add a neighbor) command, and neighbor route-map command. When this parameter is used with this command, the command applies on all peers in the specified group.

Mode Router Configuration

Examples

```
awplus# configure terminal
awplus(config)# router bgp 10
awplus(config-router)# neighbor 10.10.0.72 route-server-client
awplus# configure terminal
awplus(config)# router bgp 10
awplus(config-router)# no neighbor 10.10.0.72
route-server-client
```

neighbor send-community

Overview Use this command to specify that a community attribute should be sent to a BGP or BGP4+ neighbor.

Use the **no** variant of this command to remove the entry for the community attribute.

Syntax

```
neighbor <neighborid> send-community {both|extended|standard}
no neighbor <neighborid> send-community
{both|extended|standard}
```

Parameter	Description	
<neighborid>	{*<ip-address>*|*<ipv6-addr>*|*<peer-group>*}	
	<ip-address>	Specify the address of an IPv4 BGP neighbor, in dotted decimal notation A.B.C.D.
	<ipv6-addr>	Specify the address of an IPv6 BGP4+ neighbor, entered in hexadecimal in the format X:X::X:X.
	<peer-group>	Enter the name of an existing peer-group. For information on how to create peer groups, refer to the neighbor peer-group (add a neighbor) command, and neighbor route-map command. When this parameter is used with this command, the command applies on all peers in the specified group.
`both`	Sends Standard and Extended Community attributes. Specifying this parameter with the **no** variant of this command results in no `standard` or `extended` community attributes being sent.	
`extended`	Sends Extended Community attributes. Specifying this parameter with the **no** variant of this command results in no `extended` community attributes being sent.	
`standard`	Sends Standard Community attributes. Specifying this parameter with the **no** variant of this command results in no `standard` community attributes being sent.	

Default Both **standard** and **extended** community attributes are sent to a neighbor.

Mode [BGP] Router Configuration or IPv4 Address Family Configuration

Mode [BGP4+] Router Configuration and IPv6 Address Family Configuration

Usage This command is used to specify a community attribute to be sent to a neighbor. The community attribute groups destinations in a certain community and applies routing decisions according to those communities. On receiving community attributes the router reannounces them to the neighbor. Only when the **no**

parameter is used with this command the community attributes are not reannounced to the neighbor.

By default, both **standard** and **extended** community attributes are sent to a neighbor.

Examples [BGP]

```
awplus# configure terminal
awplus(config)# bgp config-type standard
awplus(config)# router bgp 10
awplus(config-router)# neighbor 10.10.0.72 send-community
extended
awplus# configure terminal
awplus(config)# bgp config-type standard
awplus(config)# router bgp 10
awplus(config-router)# no neighbor 10.10.0.72 send-community
extended
awplus# configure terminal
awplus(config)# bgp config-type standard
awplus(config)# router bgp 10
awplus(config-router)# address-family ipv4
awplus(config-router-af)# neighbor 10.10.0.72 send-community
extended
awplus# configure terminal
awplus(config)# bgp config-type standard
awplus(config)# router bgp 10
awplus(config-router)# address-family ipv4
awplus(config-router-af)# no neighbor 10.10.0.72 send-community
extended
awplus# configure terminal
awplus(config)# bgp config-type standard
awplus(config)# router bgp 10
awplus(config-router)# neighbor group1 peer-group
awplus(config-router)# neighbor 10.10.10.1 remote-as 10
awplus(config-router)# neighbor 10.10.10.1 peer-group group1
awplus(config-router)# neighbor group1 send-community extended
```

Examples [BGP4+]

```
awplus# configure terminal
awplus(config)# bgp config-type standard
awplus(config)# router bgp 10
awplus(config-router)# neighbor 2001:0db8:010d::1
send-community extended
awplus# configure terminal
awplus(config)# bgp config-type standard
awplus(config)# router bgp 10
awplus(config-router)# no neighbor 2001:0db8:010d::1
send-community extended
awplus# configure terminal
awplus(config)# bgp config-type standard
awplus(config)# router bgp 10
awplus(config-router)# address-family ipv6
awplus(config-router-af)# neighbor 2001:0db8:010d::1
send-community extended
awplus# configure terminal
awplus(config)# bgp config-type standard
awplus(config)# router bgp 10
awplus(config-router)# address-family ipv6
awplus(config-router-af)# no neighbor 2001:0db8:010d::1
send-community extended
awplus# configure terminal
awplus(config)# bgp config-type standard
awplus(config)# router bgp 10
awplus(config-router)# neighbor group1 peer-group
awplus(config-router)# neighbor 2001:0db8:010d::1 remote-as 10
awplus(config-router)# address-family ipv6
awplus(config-router-af)# neighbor 2001:0db8:010d::1
peer-group group1
awplus(config-router-af)# exit
awplus(config-router)# neighbor group1 send-community extended
awplus# configure terminal
awplus(config)# bgp config-type standard
awplus(config)# router bgp 10
awplus(config-router)# no neighbor group1 send-community
extended
```

Related Commands

bgp config-type

neighbor peer-group (add a neighbor)

neighbor route-map

neighbor shutdown

Overview Use this command to disable a peering relationship with a BGP or BGP4+ neighbor.

Use the **no** variant of this command to re-enable the BGP or BGP4+ neighbor.

Syntax

```
neighbor <neighborid> shutdown
no neighbor <neighborid> shutdown
```

Parameter	Description	
<neighborid>	{*<ip-address>*|*<peer-group>*}	
	<ip-address>	Specify the address of an IPv4 BGP neighbor, in dotted decimal notation A.B.C.D.
	<ipv6-addr>	Specify the address of an IPv6 BGP4+ neighbor, entered in hexadecimal in the format X:X::X:X.
	<peer-group>	Enter the name of an existing peer-group. For information on how to create peer groups, refer to the neighbor peer-group (add a neighbor) command, and neighbor route-map command. When this parameter is used with this command, the command applies on all peers in the specified group.

Mode [BGP] Router Configuration or IPv4 Address Family Configuration

Mode [BGP4+] Router Configuration

Usage This command shuts down any active session for the specified BGP or BGP4+ neighbor and clears all related routing data.

Examples [BGP]

```
awplus# configure terminal
awplus(config)# router bgp 10
awplus(config-router)# neighbor 10.10.0.72 shutdown
awplus# configure terminal
awplus(config)# router bgp 10
awplus(config-router)# no neighbor 10.10.0.72 shutdown
awplus# configure terminal
awplus(config)# router bgp 10
awplus(config-router)# neighbor group1 shutdown
awplus# configure terminal
awplus(config)# router bgp 10
awplus(config-router)# no neighbor group1 shutdown
```

Examples [BGP4+]

```
awplus# configure terminal
awplus(config)# router bgp 10
awplus(config-router)# neighbor 2001:0db8:010d::1 shutdown
awplus# configure terminal
awplus(config)# router bgp 10
awplus(config-router)# no neighbor 2001:0db8:010d::1 shutdown
awplus# configure terminal
awplus(config)# router bgp 10
awplus(config-router)# neighbor group1 shutdown
awplus# configure terminal
awplus(config)# router bgp 10
awplus(config-router)# no neighbor group1 shutdown
```

Related Commands

neighbor peer-group (add a neighbor)

neighbor route-map

neighbor soft-reconfiguration inbound

Overview Use this command to configure the device to start storing all updates from the BGP or BGP4+ neighbor, without any consideration of any inward route filtering policy that might be applied to the connection with this BGP or BGP4+ neighbor. This is so that the full set of the neighbor's updates are available locally to be used in a soft-reconfiguration event.

You may need to apply this older method of clearing routes if the peer does not support route refresh.

Use the **no** variant of this command to disable this function for a BGP or BGP4+ neighbor.

Syntax

```
neighbor <neighborid> soft-reconfiguration inbound
no neighbor <neighborid> soft-reconfiguration inbound
```

Parameter	Description	
<neighborid>	{*<ip-address>*|*<ipv6-addr>*|*<peer-group>*}	
	<ip-address>	Specify the address of an IPv4 BGP neighbor, in dotted decimal notation A.B.C.D.
	<ipv6-addr>	Specify the address of an IPv6 BGP4+ neighbor, entered in hexadecimal in the format X:X::X:X.
	<peer-group>	Enter the name of an existing peer-group. For information on how to create peer groups, refer to the neighbor peer-group (add a neighbor) command, and neighbor route-map command. When this parameter is used with this command, the command applies on all peers in the specified group.

Mode [BGP] Router Configuration or IPv4 Address Family Configuration

Mode [BGP4+] IPv6 Address Family Configuration

Usage Use this command to store updates for inbound soft reconfiguration. Soft-reconfiguration may be used in lieu of BGP route refresh capability. Using this command enables local storage of all the received routes and their attributes. This requires additional memory. When a soft reset (inbound) is done on this neighbor, the locally stored routes are re- processed according to the inbound policy. The BGP neighbor connection is not affected.

Examples [BGP]

```
awplus# configure terminal
awplus(config)# router bgp 12
awplus(config-router)# neighbor 10.10.10.10
soft-reconfiguration inbound
awplus# configure terminal
awplus(config)# router bgp 12
awplus(config-router)# no neighbor 10.10.10.10
soft-reconfiguration inbound
awplus# configure terminal
awplus(config)# router bgp 12
awplus(config-router)# address-family ipv4
awplus(config-router-
af)# neighbor 10.10.10.10 soft-reconfiguration inbound
awplus# configure terminal
awplus(config)# router bgp 12
awplus(config-router)# address-family ipv4
awplus(config-router-
af)# no neighbor 10.10.10.10 soft-reconfiguration inbound
awplus# configure terminal
awplus(config)# router bgp 10
awplus(config-router)# neighbor group1 peer-group
awplus(config-router)# neighbor 10.10.10.1 remote-as 10
awplus(config-router)# neighbor 10.10.10.1 peer-group group1
awplus(config-router)# neighbor group1 soft-reconfiguration
inbound
awplus# configure terminal
awplus(config)# router bgp 12
awplus(config-router)# no neighbor group1 soft-reconfiguration
inbound
```

Examples [BGP4+]

```
awplus# configure terminal
awplus(config)# router bgp 12
awplus(config-router)# address-family ipv6
awplus(config-router-af)# neighbor 2001:0db8:010d::1
soft-reconfiguration inbound
awplus# configure terminal
awplus(config)# router bgp 12
awplus(config-router)# address-family ipv6
awplus(config-router-af)# no neighbor 2001:0db8:010d::1
soft-reconfiguration inbound
awplus# configure terminal
awplus(config)# router bgp 10
awplus(config-router)# neighbor group1 peer-group
awplus(config-router)# neighbor 2001:0db8:010d::1 remote-as 10
awplus(config-router)# address-family ipv6
awplus(config-router-af)# neighbor 2001:0db8:010d::1
peer-group group1
awplus(config-router-af)# neighbor group1 soft-reconfiguration
inbound
awplus# configure terminal
awplus(config)# router bgp 12
awplus(config-router)# address-family ipv6
awplus(config-router-
af)# no neighbor group1 soft-reconfiguration inbound
```

Related Commands

neighbor peer-group (add a neighbor)

neighbor route-map

neighbor timers

Overview Use this command to set the keepalive, holdtime, and connect timers for a specific BGP or BGP4+ neighbor.

Use the **no** variant of this command to clear the timers for a specific BGP or BGP4+ neighbor.

Syntax

```
neighbor <neighborid> timers {<keepalive> <holdtime>|connect <connect>}
no neighbor <neighborid> timers [connect]
```

Parameter	Description	
<neighborid>	{*<ip-address>*|*<ipv6-addr>*|*<peer-group>*}	
	<ip-address>	Specify the address of an IPv4 BGP neighbor, in dotted decimal notation A.B.C.D.
	<ipv6-addr>	Specify the address of an IPv6 BGP4+ neighbor, entered in hexadecimal in the format X:X::X:X.
	<peer-group>	Enter the name of an existing peer-group. For information on how to create peer groups, refer to the neighbor peer-group (add a neighbor) command, and neighbor route-map command. When this parameter is used with this command, the command applies on all peers in the specified group.
<keepalive>	*<0-65535>* Frequency (in seconds) at which a router sends keepalive messages to its neighbor.	
<holdtime>	*<0-65535>* Interval (in seconds) after which, on not receiving a keepalive message, the router declares a neighbor dead.	
<connect>	connect *<1-65535>* Specifies the connect timer in seconds. The default connect timer value is 120 seconds as per RFC 4271. Modify this value as needed for interoperability.	

Default The keepalive timer default is 60 seconds, the holdtime timer default is 90 seconds, and the connect timer default is 120 seconds as per RFC 4271. Holdtime is keepalive * 3.

Mode [BGP] Router Configuration or IPv4 Address Family Configuration

Mode [BGP4+] Router Configuration

Usage Keepalive messages are sent by a router to inform another router that the BGP connection between the two is still active. The keepalive interval is the period of time between each keepalive message sent by the router. The holdtime interval is the time the router waits to receive a keepalive message and if it does not receive

a message for this period it declares the neighbor dead. The holdtime value must be 3 times the value of the keepalive value.

Examples [BGP]

```
awplus# configure terminal
awplus(config)# router bgp 10
awplus(config-router)# neighbor 10.10.10.1 timers 60 120
awplus# configure terminal
awplus(config)# router bgp 10
awplus(config-router)# no neighbor 10.10.10.1 timers
awplus# configure terminal
awplus(config)# router bgp 10
awplus(config-router)# neighbor group1 peer-group
awplus(config-router)# neighbor 10.10.10.1 remote-as 10
awplus(config-router)# neighbor 10.10.10.1 peer-group group1
awplus(config-router)# neighbor group1 timers 60 120
awplus# configure terminal
awplus(config)# router bgp 10
awplus(config-router)# no neighbor group1 timers
```

Examples [BGP4+]

```
awplus# configure terminal
awplus(config)# router bgp 10
awplus(config-router)# neighbor 2001:0db8:010d::1 timers 60 120
awplus# configure terminal
awplus(config)# router bgp 10
awplus(config-router)# no neighbor 2001:0db8:010d::1 timers
awplus# configure terminal
awplus(config)# router bgp 10
awplus(config-router)# neighbor group1 peer-group
awplus(config-router)# neighbor 2001:0db8:010d::1 remote-as 10
awplus(config-router)# address-family ipv6
awplus(config-router-af)# neighbor 2001:0db8:010d::1
peer-group group1
awplus(config-router-af)# exit
awplus(config-router)# neighbor group1 timers 60 120
awplus# configure terminal
awplus(config)# router bgp 10
awplus(config-router)# no neighbor group1 timers
```

Related Commands

neighbor peer-group (add a neighbor)

neighbor route-map

show ip bgp neighbors hold-time (BGP only)

show ip bgp neighbors keepalive-interval (BGP only)

timers (BGP)

neighbor transparent-as

Overview Use this command to specify not to append your AS path number even if the BGP or BGP4+ peer is an eBGP peer.

Note this command has the same effect as invoking neighbor attribute-unchanged and specifying the optional **as-path** parameter.

Syntax `neighbor <neighborid> transparent-as`

Parameter	Description	
<neighborid>	{*<ip-address>*|*<ipv6-addr>*|*<peer-group>*}	
	<ip-address>	Specify the address of an IPv4 BGP neighbor, in dotted decimal notation A.B.C.D.
	<ipv6-addr>	Specify the address of an IPv6 BGP4+ neighbor, entered in hexadecimal in the format X:X::X:X.
	<peer-group>	Enter the name of an existing peer-group. For information on how to create peer groups, refer to the neighbor peer-group (add a neighbor) command, and neighbor route-map command. When this parameter is used with this command, the command applies on all peers in the specified group.

Mode Router Configuration

Examples [BGP]

```
awplus# configure terminal
awplus(config)# router bgp 10
awplus(config-router)# neighbor 10.10.10.1 transparent-as
awplus# configure terminal
awplus(config)# router bgp 10
awplus(config-router)# neighbor group1 peer-group
awplus(config-router)# neighbor 10.10.10.1 remote-as 10
awplus(config-router)# neighbor 10.10.10.1 peer-group group1
awplus(config-router)# neighbor group1 transparent-as
```

Examples [BGP4+]

```
awplus# configure terminal
awplus(config)# router bgp 10
awplus(config-router)# neighbor 2001:0db8:010d::1
transparent-as
awplus# configure terminal
awplus(config)# router bgp 10
awplus(config-router)# neighbor group1 peer-group
awplus(config-router)# neighbor 2001:0db8:010d::1 remote-as 10
awplus(config-router)# address-family ipv6
awplus(config-router-af)# neighbor 2001:0db8:010d::1
peer-group group1
awplus(config-router-af)# exit
awplus(config-router)# neighbor group1 transparent-as
```

Related Commands

neighbor attribute-unchanged

neighbor peer-group (add a neighbor)

neighbor route-map

neighbor transparent-nexthop

neighbor transparent-nexthop

Overview Use this command to keep the next hop value of the route even if the BGP or BGP4+ peer is an eBGP peer.

Note this command has the same effect as invoking neighbor attribute-unchanged and specifying the optional **next-hop** parameter.

Syntax

```
neighbor <neighborid> transparent-nexthop
```

Parameter	Description	
<neighborid>	{*<ip-address>*|*<ipv6-addr>*|*<peer-group>*}	
	<ip-address>	Specify the address of an IPv4 BGP neighbor, in dotted decimal notation A.B.C.D.
	<ipv6-addr>	Specify the address of an IPv6 BGP4+ neighbor, entered in hexadecimal in the format X:X::X:X.
	<peer-group>	Enter the name of an existing peer-group. For information on how to create peer groups, refer to the neighbor peer-group (add a neighbor) command, and neighbor route-map command. When this parameter is used with this command, the command applies on all peers in the specified group.

Mode Router Configuration

Examples [BGP]

```
awplus# configure terminal
awplus(config)# router bgp 10
awplus(config-router)# neighbor 10.10.10.1 transparent-nexthop
awplus# configure terminal
awplus(config)# router bgp 10
awplus(config-router)# neighbor group1 peer-group
awplus(config-router)# neighbor 10.10.10.1 remote-as 10
awplus(config-router)# neighbor 10.10.10.1 peer-group group1
awplus(config-router)# neighbor group1 transparent-nexthop
```

Examples [BGP4+]

```
awplus# configure terminal
awplus(config)# router bgp 10
awplus(config-router)# neighbor 2001:0db8:010d::1
transparent-nexthop
awplus# configure terminal
awplus(config)# router bgp 10
awplus(config-router)# neighbor group1 peer-group
awplus(config-router)# neighbor 2001:0db8:010d::1 remote-as 10
awplus(config-router)# address-family ipv6
awplus(config-router-af)# neighbor 2001:0db8:010d::1
peer-group group1
awplus(config-router-af)# exit
awplus(config-router)# neighbor group1 transparent-nexthop
```

Related Commands

neighbor attribute-unchanged

neighbor peer-group (add a neighbor)

neighbor route-map

neighbor transparent-as

neighbor unsuppress-map

Overview Use this command to selectively leak more specific routes to a particular BGP or BGP4+ neighbor.

Use the **no** variant of this command to remove selectively leaked specific routes to a particular BGP or BGP4+ neighbor.

Syntax

```
neighbor <neighborid> unsuppress-map <route-map-name>
no neighbor <neighborid> unsuppress-map <route-map-name>
```

Parameter	Description	
<neighborid>	{*<ip-address>* | *<ipv6-addr>* | *<peer-group>*}	
	<ip-address>	Specify the address of an IPv4 BGP neighbor, in dotted decimal notation A.B.C.D.
	<ipv6-addr>	Specify the address of an IPv6 BGP4+ neighbor, entered in hexadecimal in the format X:X::X:X.
	<peer-group>	Enter the name of an existing peer-group. For information on how to create peer groups, refer to the neighbor peer-group (add a neighbor) command, and neighbor route-map command. When this parameter is used with this command, the command applies on all peers in the specified group.
<route-map-name>	The name of the route-map used to select routes to be unsuppressed.	

Mode [BGP] Router Configuration or IPv4 Address Family Configuration

Mode [BGP4+] IPv6 Address Family Configuration

Usage When the aggregate-address command is used with the **summary-only** option, the more-specific routes of the aggregate are suppressed to all neighbors. Use this command instead to selectively leak more-specific routes to a particular neighbor.

Examples [BGP]

```
awplus# configure terminal
awplus(config)# router bgp 10
awplus(config-router)# neighbor 10.10.0.73 unsuppress-map mymap
awplus# configure terminal
awplus(config)# router bgp 10
awplus(config-router)# address-family ipv4 unicast
awplus(config-router-af)# neighbor 10.10.0.70 unsuppress-map
mymap
awplus# configure terminal
awplus(config)# router bgp 10
awplus(config-router)# no neighbor 10.10.0.73 unsuppress-map
mymap
awplus# configure terminal
awplus(config)# router bgp 10
awplus(config-router)# address-family ipv4 unicast
awplus(config-router-af)# no neighbor 10.10.0.70 unsuppress-map
mymap
awplus# configure terminal
awplus(config)# router bgp 10
awplus(config-router)# neighbor group1 peer-group
awplus(config-router)# neighbor 10.10.10.1 remote-as 10
awplus(config-router)# neighbor 10.10.10.1 peer-group group1
awplus(config-router)# neighbor group1 unsuppress-map mymap
awplus# configure terminal
awplus(config)# router bgp 10
awplus(config-router)# no neighbor group1 unsuppress-map mymap
```

Examples [BGP4+]

```
awplus# configure terminal
awplus(config)# router bgp 10
awplus(config-router)# address-family ipv6 unicast
awplus(config-router-af)# neighbor 2001:0db8:010d::1
unsuppress-map mymap
awplus# configure terminal
awplus(config)# router bgp 10
awplus(config-router)# address-family ipv6 unicast
awplus(config-router-af)# no neighbor 2001:0db8:010d::1
unsuppress-map mymap
awplus# configure terminal
awplus(config)# router bgp 10
awplus(config-router)# neighbor group1 peer-group
awplus(config-router)# neighbor 2001:0db8:010d::1 remote-as 10
awplus(config-router)# address-family ipv6
awplus(config-router-af)# neighbor 2001:0db8:010d::1
peer-group group1
awplus(config-router-af)# neighbor group1 unsuppress-map mymap
awplus# configure terminal
awplus(config)# router bgp 10
awplus(config-router)# address-family ipv6
awplus(config-router-af)# no neighbor group1 unsuppress-map
mymap
```

Related Commands

aggregate-address

neighbor peer-group (add a neighbor)

neighbor route-map

neighbor update-source

Overview Use this command to specify the source IPv4 or IPv6 address of BGP or BGP4+ packets, which are sent to the neighbor for routing updates, as the IPv4 or IPv6 address configured on the specified interface. The specified interface is usually the local loopback (lo) interface to allow internal BGP or BGP4+ connections to stay up regardless of which interface is used to reach a neighbor.

Use the **no** variant of this command to remove the IPv4 or IPv6 address from the interface as the source IPv4 or IPv6 address of BGP or BGP4+ packets sent to the neighbor, and restores the interface assignment to the closest interface, which is also called the best local address.

Syntax

```
neighbor <neighborid> update-source <interface>
no neighbor <neighborid> update-source
```

Parameter	Description	
<neighborid>	{*<ip-address>* | *<ipv6-addr>* | *<peer-group>*}	
	<ip-address>	Specify the address of an IPv4 BGP neighbor, in dotted decimal notation A.B.C.D.
	<ipv6-addr>	Specify the address of an IPv6 BGP4+ neighbor, entered in hexadecimal in the format X:X::X:X.
	<peer-group>	Enter the name of an existing peer-group. For information on how to create peer groups, refer to the neighbor peer-group (add a neighbor) command, and neighbor route-map command. When this parameter is used with this command, the command applies on all peers in the specified group.
<interface>	Specifies the local loopback interface (lo).	

Default Use of this command sets a default value of 2 for the maximum hop count.

Mode [BGP] Router Configuration or IPv4 Address Family Configuration

Mode [BGP4+] Router Configuration

Usage Use this command in conjunction with any specified interface on the router. The local loopback interface is the interface that is most commonly used with this command. The use of local loopback interface eliminates a dependency and BGP or BGP4+ does not have to rely on the availability of a particular interface for making BGP or BGP4+ peer relationships.

Examples [BGP] To source BGP connections for neighbor 10.10.0.72 with the IP address of the local loopback address instead of the best local address, enter the commands listed below:

```
awplus(config)# interface lo
awplus(config-if)# ip address 10.10.0.73/24
awplus(config-if)# exit
awplus(config)# router bgp 100
awplus(config-router)# network 10.10.0.0
awplus(config-router)# neighbor 10.10.0.72 remote-as 110
awplus(config-router)# neighbor 10.10.0.72 update-source lo
```

To remove BGP connections for neighbor 10.10.0.72 with the IP address of the local loopback address instead of the best local address, enter the commands listed below:

```
awplus(config)# router bgp 100
awplus(config-router)# no neighbor 10.10.0.72 update-source
```

To source BGP connections for neighbor group1 with the IP address of the local loopback address instead of the best local address, enter the commands listed below:

```
awplus(config)# interface lo
awplus(config-if)# ip address 10.10.0.73/24
awplus(config-if)# exit
awplus(config)# router bgp 100
awplus(config-router)# network 10.10.0.0
awplus(config-router)# neighbor group1 peer-group
awplus(config-router)# neighbor 10.10.0.72 remote-as 100
awplus(config-router)# neighbor 10.10.0.72 peer-group group1
awplus(config-router)# neighbor group1 update-source lo
```

To remove BGP connections for neighbor group1 with the IP address of the local loopback address instead of the best local address, enter the commands listed below:

```
awplus(config)# router bgp 100
awplus(config-router)# neighbor group1 update-source lo
```

Examples [BGP4+]

To source BGP connections for neighbor 2001:0db8:010d::1 with the IPv6 address of the local loopback address instead of the best local address, enter the commands listed below:

```
awplus(config)# interface lo
awplus(config-if)# ipv6 address 2001:0db8:010d::1/128
awplus(config-if)# exit
awplus(config)# router bgp 100
awplus(config-router)# neighbor 2001:0db8:010d::1 remote-as 110
awplus(config-router)# neighbor 2001:0db8:010d::1
update-source lo
```

To remove BGP connections for neighbor 2001:0db8:010d::1 with the IPv6 address of the local loopback address instead of the best local address, enter the commands listed below:

```
awplus(config)# router bgp 100
awplus(config-router)# no neighbor 2001:0db8:010d::1
update-source
```

To source BGP connections for neighbor group1 with the IPv6 address of the local loopback address instead of the best local address, enter the commands listed below:

```
awplus(config)# interface lo
awplus(config-if)# ipv6 address 2001:0db8:010d::1/128
awplus(config-if)# exit
awplus(config)# router bgp 100
awplus(config-router)# neighbor group1 peer-group
awplus(config-router)# neighbor 2001:0db8:010d::1 remote-as 100
awplus(config-router)# address-family ipv6
awplus(config-router-
af)# neighbor 2001:0db8:010d::1 peer-group group1
awplus(config-router-
af)# exit
awplus(config-router)# neighbor group1 update-source lo
```

To remove BGP connections for neighbor group1 with the IPv6 address of the local loopback address instead of the best local address, enter the commands listed below:

```
awplus(config)# router bgp 100
awplus(config-router)# neighbor group1 update-source lo
```

Related Commands

neighbor peer-group (add a neighbor)

neighbor route-map

neighbor version (BGP only)

Overview Use this command to configure the device to accept only a particular BGP version.

Use the **no** variant of this command to use the default BGP version (version 4).

Syntax

```
neighbor <neighborid> version <version>
no neighbor <neighborid> version
```

Parameter	Description	
<neighborid>	{*<ip-address>*|*<peer-group>*}	
	<ip-address>	The address of an IPv4 BGP neighbor, in dotted decimal notation A.B.C.D.
	<peer-group>	Enter the name of an existing peer-group. For information on how to create peer groups, refer to the neighbor peer-group (add a neighbor) command, and neighbor route-map command. When this parameter is used with this command, the command applies on all peers in the specified group.
<version>	{4} Specifies the BGP version number.	

Mode Router Configuration or IPv4 Address Family Configuration

Usage By default, the system uses BGP version 4 and on request dynamically negotiates down to version 2. Using this command disables the router's version-negotiation capability and forces the router to use only a specified version with the neighbor.

Examples

```
awplus# configure terminal
awplus(config)# router bgp 10
awplus(config-router)# neighbor 10.10.10.1 version 4
awplus# configure terminal
awplus(config)# router bgp 10
awplus(config-router)# neighbor group1 peer-group
awplus(config-router)# neighbor 10.10.10.1 remote-as 10
awplus(config-router)# neighbor 10.10.10.1 peer-group group1
awplus(config-router)# neighbor group1 version 4
awplus# configure terminal
awplus(config)# router bgp 10
awplus(config-router)# no neighbor 10.10.10.1 version
awplus# configure terminal
awplus(config)# router bgp 10
awplus(config-router)# no neighbor group1 version
```

Related Commands

neighbor peer-group (add a neighbor)

neighbor route-map

neighbor weight

Overview Use this command to set default weights for routes from this BGP or BGP4+ neighbor.

Use the **no** variant of this command to remove a weight assignment.

Syntax

```
neighbor <neighborid> weight <weight>
no neighbor <neighborid> weight [<weight>]
```

Parameter	Description	
<neighborid>	*{<ip-address>|<ipv6-addr>|<peer-group>}*	
	<ip-address>	Specify the address of an IPv4 BGP neighbor, in dotted decimal notation A.B.C.D.
	<ipv6-addr>	Specify the address of an IPv6 BGP4+ neighbor, entered in hexadecimal in the format X:X::X:X.
	<peer- group>	Enter the name of an existing peer-group. For information on how to create peer groups, refer to the neighbor peer-group (add a neighbor) command, and neighbor route-map command. When this parameter is used with this command, the command applies on all peers in the specified group.
<weight>	*<0-65535>* Specifies the weight this command assigns to the route.	

Mode [BGP] Router Configuration or IPv4 Address Family Configuration

Mode [BGP4+] IPv6 Address Family Configuration

Usage Use this command to specify a weight value to all routes learned from a BGP or BGP4+ neighbor. The route with the highest weight gets preference when there are other routes on the network.

Unlike the local-preference attribute, the weight attribute is relevant only to the local router.

The weights assigned using the **set weight** command overrides the weights assigned using this command.

Examples [BGP]

```
awplus# configure terminal
awplus(config)# router bgp 10
awplus(config-router)# neighbor 10.10.10.1 weight 60
awplus# configure terminal
awplus(config)# router bgp 10
awplus(config-router)# no neighbor 10.10.10.1 weight
awplus# configure terminal
awplus(config)# router bgp 10
awplus(config-router)# address-family ipv4
awplus(config-router-af)# neighbor 10.10.10.1 weight 60
awplus# configure terminal
awplus(config)# router bgp 10
awplus(config-router)# address-family ipv4
awplus(config-router-af)# no neighbor 10.10.10.1 weight
awplus# configure terminal
awplus(config)# router bgp 10
awplus(config-router)# neighbor group1 peer-group
awplus(config-router)# neighbor 10.10.10.1 remote-as 10
awplus(config-router)# neighbor 10.10.10.1 peer-group group1
awplus(config-router)# neighbor group1 weight 60
awplus# configure terminal
awplus(config)# router bgp 10
awplus(config-router)# no neighbor group1 weight
```

Examples [BGP4+]

```
awplus# configure terminal
awplus(config)# router bgp 10
awplus(config-router)# address-family ipv6
awplus(config-router-af)# neighbor 2001:0db8:010d::1 weight 60
awplus# configure terminal
awplus(config)# router bgp 10
awplus(config-router)# address-family ipv6
awplus(config-router-af)# no neighbor 2001:0db8:010d::1 weight
awplus# configure terminal
awplus(config)# router bgp 10
awplus(config-router)# neighbor group1 peer-group
awplus(config-router)# neighbor 2001:0db8:010d::1 remote-as 10
awplus(config-router)# address-family ipv6
awplus(config-router-af)# neighbor 2001:0db8:010d::1
peer-group group1
awplus(config-router-af)# neighbor group1 weight 60
awplus# configure terminal
awplus(config)# router bgp 10
awplus(config-router)# address-family ipv6
awplus(config-router-af)# no neighbor group1 weight
```

Related Commands

neighbor peer-group (add a neighbor)

neighbor route-map

network (BGP and BGP4+)

Overview Use this command to specify particular routes to be advertised into the BGP or BGP4+ routing process. A unicast network address without a mask is accepted if it falls into the natural boundary of its class. A class-boundary mask is derived if the address matches its natural class-boundary.

Note that you can specify a prefix length for the prefix being added, and you can also specify a classful network without a prefix length and an appropriate prefix length is added. Note that specifying a non-classful prefix without a prefix length results in a /32 prefix length on an IPv4 route.

Use the **no** variant of this command to remove a network route entry.

Syntax [BGP]

```
network {<ip-prefix/length>|<ip-network-addr>} [mask
<network-mask>] [route-map <route-map-name>] [backdoor]
```

```
no network {<ip-prefix/length>|<ip-network-addr>} [mask
<network-mask>] [route-map <route-map-name>] [backdoor]
```

Syntax [BGP4+]

```
network {<ipv6-prefix/length>|<ipv6-network-addr>} [route-map
<route-map-name>]
```

```
no network {<ipv6-prefix/length>|<ipv6-network-addr>}
[route-map <route-map-name>]
```

Parameter	Description
<ip-prefix/length>	IP network prefix and prefix length entered in dotted decimal format for the IP network prefix, then slash notation for the prefix length in the format A.B.C.D/M, e.g. 192.168.1.224/27
<ip-network-addr>	IP network prefix entered in dotted decimal format A.B.C.D, e.g. 192.168.1.224
<network-mask>	Specify a network mask in the format A.B.C.D, e.g. 255.255.255.224.
<ipv6-prefix/length>	IPv6 network prefix and prefix length entered in dotted decimal format for the IPv6 network prefix, then slash notation for the IPv6 prefix length in the format X:X::X:X/M, e.g. 2001:db8::/64
<ipv6-network-addr>	IP network prefix entered in dotted decimal format A.B.C.D, e.g. 192.168.1.224
<route-map-name>	Specify the name of the route map.
backdoor	Specify a BGP backdoor route that is not advertised.

Mode [BGP] Router Configuration and IPv4 Address Family `[ipv4 unicast]` mode

Mode [BGP4+] IPv6 Address Family Configuration

Usage It does not matter how the route is arranged in the IP or IPv6 routing table. The route can arrive in the IP routing table by a static route, or the route can be learned from OSPF or OSPFv3 or RIP or RIPng routing.

If you configure a route-map, then that route-map will be used in filtering the network, or the route-map will be used to modify the attributes that are advertised with the route.

Example [BGP] The following example illustrates a Class-A address configured as a network route. The natural Class-A network prefix mask length of 8 will be internally derived, that is, 2.0.0.0/8.

```
awplus(config)# router bgp 100
awplus(config-router)# network 2.0.0.0
```

Output [BGP] Figure 29-1: Example output from the **show running-config** command after entering **network 2.0.0.0**

```
awplus#show running-config

router bgp 100
 network 2.0.0.0/8
```

Example [BGP] The following example illustrates a network address which does not fall into its natural class boundary, and hence, is perceived as a host route, that is, 192.0.2.224/27.

```
awplus(config)# router bgp 100
awplus(config-router)# network 192.0.2.224 mask 255.255.255.224
```

Output [BGP] Figure 29-2: Example output from the **show running-config** command after entering **network 192.0.2.224 mask 255.255.255.224**

```
awplus#show running-config

router bgp 100
 network 192.0.2.224/27
```

Example [BGP] The following example is the same as the previous example for host route 192.0.2.224/27, but is entered in prefix/length format using slash notation (instead of prefix plus mask in dotted decimal format using the **mask** keyword before the network mask in dotted decimal format):

```
awplus(config)# router bgp 100
awplus(config-router)# network 192.0.2.224/27
```

Example [BGP4+] The following example is the same as the previous example for host route 2001:db8::/32:

```
awplus(config)# router bgp 100
awplus(config-router)# address-family ipv6
awplus(config-router-af)# network 2001:db8::/32
```

Output [BGP4+] Figure 29-3: Example output from the **show running-config** command after entering **network 2001:db8::/32**

```
awplus#show running-config

router bgp 100
 network 2001:db8::/32
```

network synchronization

Overview Use this command to ensure the exact same static network prefix, specified through any of the **network** commands, is local or has IGP reachability before introduction to BGP or BGP4+.

Use the **no** variant of this command to disable this function.

Syntax

```
network synchronization
no network synchronization
```

Default Network synchronization is disabled by default.

Mode [BGP] Router Configuration and IPv4 Address Family [ipv4 unicast] Configuration

Mode [BGP4+] IPv6 Address Family [ipv6 unicast] Configuration

Examples [BGP] The following example enables IGP synchronization of BGP static network routes in the Router Configuration mode.

```
awplus# configure terminal
awplus(config)# router bgp 11
awplus(config-router)# network synchronization
```

The following example enables IGP synchronization of BGP static network routes in the IPv4-Unicast address family.

```
awplus# configure terminal
awplus(config)# router bgp 11
awplus(config-router)# address-family ipv4 unicast
awplus(config-router-af)# network synchronization
```

Example [BGP4+] The following example enables IGP synchronization of BGP4+ static network routes in the IPv6-Unicast address family.

```
awplus# configure terminal
awplus(config)# router bgp 11
awplus(config-router)# address-family ipv6 unicast
awplus(config-router-af)# network synchronization
```

redistribute (into BGP or BGP4+)

Overview Use this command to inject routes from one routing process into a BGP or BGP4+ routing table.

Use the **no** variant of this command to disable this function.

Syntax

```
redistribute {ospf|rip|connected|static} [route-map
<route-map-entry-pointer>]
```

```
no redistribute {ospf|rip|connected|static} [route-map
<route-map-entry-pointer>]
```

Parameter	Description
`connected`	Specifies the redistribution of connected routes for both BGP and BGP4+.
`ospf`	Specifies the redistribution of OSPF information for BGP or OSPFv3 information for BGP4+.
`rip`	Specifies the redistribution of RIP information for BGP or RIPng information for BGP4+.
`static`	Specifies the redistribution of Static routes for both BGP and BGP4+.
`route-map`	Route map reference for both BGP and BGP4+.
`<route-map-entry-pointer>`	Pointer to route-map entries.

Mode [BGP] Router Configuration or IPv4 Address Family Configuration

Mode [BGP4+] Router Configuration or IPv6 Address Family Configuration

Usage Redistribution is used by routing protocols to advertise routes that are learned by some other means, such as by another routing protocol or by static routes. Since all internal routes are dumped into BGP, careful filtering is applied to make sure that only routes to be advertised reach the internet, not everything. This command allows redistribution by injecting prefixes from one routing protocol into another routing protocol.

Examples [BGP/ BGP+] The following example shows the configuration of a route-map named `rmap1`, which is then applied using the **redistribute route-map** command.

```
awplus# configure terminal
awplus(config)# route-map rmap1 permit 1
awplus(config-route-map)# match origin incomplete
awplus(config-route-map)# set metric 100
awplus(config-route-map)# exit
awplus(config)# router bgp 12
awplus(config-router)# redistribute ospf route-map rmap1
```

To apply the above example to a specific VRF instance named `blue`, use the following commands:

```
awplus(config)# router bgp 12
awplus(config-router)# address-family ipv4 vrf blue
awplus(config-router-af)# redistribute ospf route-map rmap1
```

The following example shows the configuration of a route-map named `rmap2`, which is then applied using the **redistribute route-map** command.

```
awplus# configure terminal
awplus(config)# route-map rmap2 permit 3
awplus(config-route-map)# match interface vlan1
awplus(config-route-map)# set metric-type 1
awplus(config-route-map)# exit
awplus(config)# router ospf 100
awplus(config-router)# redistribute bgp route-map rmap2
```

Note that configuring a route-map and applying it with the redistribute route-map command allows you to filter which router are distributed from another routing protocol (such as OSPF with BGP). A route-map can also set the metric, tag, and metric-type of the redistributed routes.

Command changes

Version 5.4.6-2.1: VRF-lite support added.

restart bgp graceful (BGP only)

Overview Use this command to force the device to perform a graceful BGP restart.

Syntax

```
restart bgp graceful
```

Mode Privileged Exec

Usage Before using this command, BGP graceful-restart capabilities must be enabled within the router BGP (bgp graceful-restart command), and each neighbor configured on the device should be set to advertise its graceful-restart capability (bgp graceful-restart graceful-reset command). The neighbor devices also need to have BGP graceful-restart capabilities enabled (bgp graceful-restart command).

This command stops the whole BGP process and makes the device retain the BGP routes and mark them as stale. Receiving BGP speakers, retain and mark as stale all BGP routes received from the restarting speaker for all the address families received in the Graceful Restart Capability exchange.

When a **restart bgp graceful** command is issued, the BGP configuration is reloaded from the last saved configuration. Ensure you first issue a **copy running-config startup-config**.

Example

```
awplus# restart bgp graceful
```

Related Commands

bgp graceful-restart

bgp graceful-restart graceful-reset

router bgp

Overview Use this command to configure a BGP routing process, specifying the 32-bit Autonomous System (AS) number.

Use the **no** variant of this command to disable a BGP routing process, specifying the 32-bit AS number.

Syntax

```
router bgp <asn>
no router bgp <asn>
```

Parameter	Description
<asn>	*<1-4294967295>* Specifies the 32-bit Autonomous System (AS) number.

Mode Global Configuration

Usage The **router bgp** command enables a BGP routing process:

```
router bgp 1
    neighbor 10.0.0.1 remote-as 1
    neighbor 10.0.0.2 remote-as 1
     !
  router bgp 2
    neighbor 10.0.0.3 remote-as 2
    neighbor 10.0.0.4 remote-as 2
```

Examples

```
awplus# configure terminal
awplus(config)# router bgp 12
awplus(config-router)#
awplus# configure terminal
awplus(config)# no router bgp 12
awplus(config)#
```

route-map

Overview Use this command to configure a route map entry, and to specify whether the device will process or discard matching routes.

The device uses a name to identify the route map, and a sequence number to identify each entry in the route map.

The **route-map** command puts you into route-map configuration mode. In this mode, you can use the following:

- one or more of the **match** commands to create match clauses. These specify what routes match the entry.
- one or more of the **set** commands to create set clauses. These change the attributes of matching routes.

Use the **no** variant of this command to delete a route map or to delete an entry from a route map.

Syntax

```
route-map <mapname> {deny|permit} <seq>
no route-map <mapname>
no route-map <mapname> {deny|permit} <seq>
```

Parameter	Description
<mapname>	A name to identify the route map.
`deny`	The route map causes a routing process to discard matching routes.
`permit`	The route map causes a routing process to use matching routes.
<seq>	<1-65535> The sequence number of the entry. You can use this parameter to control the order of entries in this route map.

Mode Global Configuration

Usage Route maps allow you to control and modify routing information by filtering routes and setting route attributes. You can apply route maps when the device:

- processes BGP update messages that it has received from a peer
- prepares BGP update messages to send to peers
- redistributes routes from one routing protocol into another
- redistributes static routes into routing protocols
- uses BGP route flap dampening

When a routing protocol passes a route through a route map, it checks the entries in order of their sequence numbers, starting with the lowest numbered entry.

If it finds a match on a route map with an action of permit, then it applies any set clauses and accepts the route. Having found a match, the route is not compared against any further entries of the route map.

If it finds a match on a route map with an action of deny, it will discard the matching route.

If it does not find a match, it discards the route. This means that route maps end with an implicit deny entry. To permit all non-matching routes, end your route map with an entry that has an action of **permit** and no match clause.

Examples

To enter route-map mode for entry 1 of the route map called "route1", and then add a match and set clause to it, use the commands:

```
awplus# configure terminal
awplus(config)# route-map route1 permit 1
awplus(config-route-map)# match as-path 60
awplus(config-route-map)# set weight 70
```

To enter route-map mode for entry 2 of the route map called "route1", and then add a match and set clause to it, use the commands:

```
awplus# configure terminal
awplus(config)# route-map route1 permit 2
awplus(config-route-map)# match interface vlan2
awplus(config-route-map)# set metric 20
```

Note how the prompt changes when you go into route map configuration mode.

To make the device process non-matching routes instead of discarding them, add a command like the following one:

```
awplus(config)# route-map route1 permit 100
```

Related Commands

For BGP:

show route-map

bgp dampening

neighbor default-originate

neighbor route-map

neighbor unsuppress-map

network (BGP and BGP4+)

redistribute (into BGP or BGP4+)

show ip bgp route-map (BGP only)

For OSPF:

default-information originate

redistribute (OSPF)

For RIP:

redistribute (RIP)

set as-path

Overview Use this command to add an AS path set clause to a route map entry.

When a BGP update message matches the route map entry, the device prepends the specified Autonomous System Number (ASN) or ASNs to the update's AS path attribute.

The AS path attribute is a list of the autonomous systems through which the announcement for the prefix has passed. As prefixes pass between autonomous systems, each autonomous system adds its ASN to the beginning of the list. This means that the AS path attribute can be used to make routing decisions.

Use the **no** variant of this command to remove the set clause.

Syntax

```
set as-path prepend <1-65535> [<1-65535>]...
no set as-path prepend [<1-65535> [<1-65535>]...]
```

Parameter	Description
`prepend`	Prepends the autonomous system path.
<1-65535>	The number to prepend to the AS path. If you specify multiple ASNs, separate them with spaces.

Mode Route-map mode

Usage Use the **set as-path** command to specify an autonomous system path. By specifying the length of the AS-Path, the device influences the best path selection by a neighbor. Use the `prepend` parameter with this command to prepend an AS path string to routes increasing the AS path length.

This command is valid for BGP update messages only.

Example To use entry `3` of the route map called `myroute` to prepend ASN `8` and `24` to the AS path of matching update messages, use the commands:

```
awplus# configure terminal
awplus(config)# route-map myroute permit 3
awplus(config-route-map)# set as-path prepend 8 24
```

Related Commands

match as-path

route-map

show route-map

set community

Overview Use this command to add a community set clause to a route map entry.

When a BGP update message matches the route map entry, the device takes one of the following actions:

- changes the update's community attribute to the specified value or values, or
- adds the specified community value or values to the update's community attribute, if you specify the **additive** parameter after specifying another parameter. or
- removes the community attribute from the update, if you specify the **none** parameter

Use the **no** variant of this command to remove the set clause.

Syntax

```
set community {[<1-65535>][AA:NN] [internet] [local-AS]
[no-advertise] [no-export] [additive]}
```

```
no set community {[AA:NN] [internet] [local-AS] [no-advertise]
[no-export] [additive]}
```

```
set community none
```

```
no set community none
```

Parameter	Description
<1-65535>	The AS number of the community as an integer not in AA:NN format.
AA:NN	The Autonomous System (AS) number of the community, in AA:NN format. AS numbers are assigned to the regional registries by the IANA (www.iana.org) and can be obtained from the registry in your region. AA and NN are both integers from 1 to 65535. AA is the AS number; NN is a value chosen by the ASN administrator.
`local-AS`	The community of routes that must not be advertised to external BGP peers (this includes peers in other members' Autonomous Systems inside a BGP confederation).
`internet`	The community of routes that can be advertised to all BGP peers.
`no-advertise`	The community of routes that must not be advertised to other BGP peers.
`no-export`	The community of routes that must not be advertised outside a BGP confederation boundary (a standalone Autonomous System that is not part of a confederation should be considered a confederation itself).

Parameter	Description
`none`	The device removes the community attribute from matching update messages.
`additive`	The device adds the specified community value to the update message's community attribute, instead of replacing the existing attribute. By default this parameter is not included, so the device replaces the existing attribute.

Mode Route-map Configuration

Usage This command is valid for BGP update messages only.

Examples To use entry `3` of the route map called `rmap1` to put matching routes into the no-advertise community, use the commands:

```
awplus# configure terminal
awplus(config)# route-map rmap1 permit 3
awplus(config-route-map)# set community no-advertise
```

To use entry `3` of the route map called `rmap1` to put matching routes into several communities, use the commands:

```
awplus# configure terminal
awplus(config)# route-map rmap1 permit 3
awplus(config-route-map)# set community 10:01 23:34 12:14
no-export
```

To use entry `3` of the route map called `rmap1` to put matching routes into a single AS community numbered `16384`, use the commands:

```
awplus# configure terminal
awplus(config)# route-map rmap1 permit 3
awplus(config-route-map)# set community 16384 no-export
```

Related Commands

match community

route-map

set aggregator

set comm-list delete

set extcommunity

show route-map

show bgp ipv6 (BGP4+ only)

Overview Use this command to display BGP4+ network information for a specified IPv6 address.

For information on filtering and saving command output, see the "Getting Started with AlliedWare Plus" Feature Overview and Configuration Guide.

Syntax

```
show bgp ipv6 <ipv6-addr>
```

Parameter	Description
<ipv6-addr>	Specifies the IPv6 address, entered in hexadecimal in the format X:X::X:X.

Mode User Exec and Privileged Exec

Example

```
awplus# show bgp ipv6 2001:0db8:010d::1
```

Related Commands show bgp ipv6 longer-prefixes (BGP4+ only)

show bgp ipv6 community (BGP4+ only)

Overview Use this command to display routes that match specified communities within an IPv6 environment. Use the show ip bgp community (BGP only) command within an IPv4 environment.

For information on filtering and saving command output, see the "Getting Started with AlliedWare Plus" Feature Overview and Configuration Guide.

You may use any combination and repetition of parameters listed in the *<type>* placeholder.

Syntax

```
show bgp ipv6 community [<type>] [exact-match]
```

Parameter		Description
<type>	{[*AA:NN*][local-AS][no-advertise][no-export]}	
	AA:NN	Specifies the Autonomous System (AS) community number, in AA:NN format.
	local-AS	Do not send outside local Autonomous Systems (well-known community).
	no-advertise	Do not advertise to any peer (well-known community).
	no-export	Do not export to next AS (well-known community).
exact-match	Specifies that the exact match of the communities is displayed. This optional parameter cannot be repeated.	

Mode User Exec and Privileged Exec

Examples Note that the AS numbers shown are examples only.

```
awplus# show bgp ipv6 community 64497:64499 exact-match
```

```
awplus# show bgp ipv6 community 64497:64499 64500:64501
exact-match
```

```
awplus# show bgp ipv6 community 64497:64499 64500:64501
64510:64511no-advertise
```

```
awplus# show bgp ipv6 community no-advertise
no-advertiseno-advertise exact-match
```

```
awplus# show bgp ipv6 community no-export 64510:64511
no-advertise local-AS no-export
```

```
awplus# show bgp ipv6 community no-export 64510:64511
no-advertise 64497:64499 64500:64501 no-export
```

```
awplus# show bgp ipv6 community no-export 64497:64499
no-advertise local-AS no-export
```

Related Commands show ip bgp community (BGP only)

show bgp ipv6 community-list (BGP4+ only)

Overview Use this command to display routes that match the given community-list within an IPv6 environment. Use the show ip bgp community-list (BGP only) command within an IPv4 environment.

For information on filtering and saving command output, see the "Getting Started with AlliedWare Plus" Feature Overview and Configuration Guide.

Syntax

```
show bgp ipv6 community-list <listname> [exact-match]
```

Parameter	Description
`<listname>`	Specifies the community list name.
`exact-match`	Displays only routes that have exactly the same specified communities.

Mode User Exec and Privileged Exec

Example

```
awplus# show bgp ipv6 community-list mylist exact-match
```

Related Commands show ip bgp community-list (BGP only)

show bgp ipv6 dampening (BGP4+ only)

Overview Use this command to show dampened routes from a BGP4+ instance within an IPv6 environment. Use the show ip bgp dampening (BGP only) command to show dampened routes from a BGP instance within an IPv4 environment.

For information on filtering and saving command output, see the "Getting Started with AlliedWare Plus" Feature Overview and Configuration Guide.

Syntax

```
show bgp ipv6 dampening
{dampened-paths|flap-statistics|parameters}
```

Parameter	Description
`dampened-paths`	Display paths suppressed due to dampening.
`flap-statistics`	Display flap statistics of routes.
`parameters`	Display details of configured dampening parameters.

Mode User Exec and Privileged Exec

Usage Enable BGP4+ dampening to maintain dampened-path information in memory.

Examples

```
awplus# show bgp ipv6 dampening dampened-path
awplus# show bgp ipv6 dampening flap-statistics
awplus# show bgp ipv6 dampening parameter
```

Related Commands show ip bgp dampening (BGP only)

show bgp ipv6 filter-list (BGP4+ only)

Overview Use this command to display routes conforming to the filter-list within an IPv6 environment. Use the show ip bgp filter-list (BGP only) command to display routes conforming to the filter-list within an IPv4 environment.

For information on filtering and saving command output, see the "Getting Started with AlliedWare Plus" Feature Overview and Configuration Guide.

Syntax

```
show bgp ipv6 filter-list <listname>
```

Parameter	Description
<listname>	Specifies the regular-expression access list name.

Mode User Exec and Privileged Exec

Example

```
awplus# show bgp ipv6 filter-list mylist
```

Related Commands show ip bgp filter-list (BGP only)

show bgp ipv6 inconsistent-as (BGP4+ only)

Overview Use this command to display routes with inconsistent AS Paths within an IPv6 environment. Use the show ip bgp inconsistent-as (BGP only) command to display routes with inconsistent AS paths within an IPv4 environment.

For information on filtering and saving command output, see the "Getting Started with AlliedWare Plus" Feature Overview and Configuration Guide.

Syntax
```
show bgp ipv6 inconsistent-as
```

Mode User Exec and Privileged Exec

Example
```
awplus# show bgp ipv6 inconsistent-as
```

Related Commands show ip bgp inconsistent-as (BGP only)

show bgp ipv6 longer-prefixes (BGP4+ only)

Overview Use this command to display the route of the local BGP4+ routing table for a specific prefix with a specific mask or for any prefix having a longer mask than the one specified.

For information on filtering and saving command output, see the "Getting Started with AlliedWare Plus" Feature Overview and Configuration Guide.

Syntax

```
show bgp ipv6 <ipv6-addr/prefix-length> longer-prefixes
```

Parameter	Description
<ipv6-addr/prefix-length>	Specifies the IPv6 address with prefix length. The IPv6 address uses the format X:X::X:X/Prefix-Length. The prefix-length is usually set between 0 and 64.

Mode User Exec and Privileged Exec

Example

```
awplus# show bgp ipv6 2001:0db8::/64 longer-prefixes
```

Related Commands show bgp ipv6 (BGP4+ only)

show bgp ipv6 neighbors (BGP4+ only)

Overview Use this command to display detailed information on peering connections to all BGP4+ neighbors within an IPv6 environment.

Use the show ip bgp neighbors (BGP only) command to display detailed information on peering connections to all BGP neighbors within an IPv4 environment.

For information on filtering and saving command output, see the "Getting Started with AlliedWare Plus" Feature Overview and Configuration Guide.

Syntax

```
show bgp ipv6 neighbors [<ipv6-addr> [advertised-routes|
received prefix-filter|received-routes|routes]]
```

Parameter	Description
<ipv6-addr>	Specifies the IPv6 address, entered in hexadecimal in the format X:X::X:X.
`advertised-routes`	Displays the routes advertised to a BGP4+ neighbor.
`received prefix-filter`	Displays received prefix-list filters.
`received-routes`	Displays the received routes from the neighbor. To display all the received routes from the neighbor, configure the BGP4+ soft reconfigure first.
`routes`	Displays all accepted routes learned from neighbors.

Mode User Exec and Privileged Exec

Examples [BGP4+]

```
awplus# show bgp ipv6 neighbors 2001:0db8:010d::1
advertised-routes
```

```
awplus# show bgp ipv6 neighbors 2001:0db8:010d::1 received
prefix-filter
```

```
awplus# show bgp ipv6 neighbors 2001:0db8:010d::1
received-routes
```

```
awplus# show bgp ipv6 neighbors 2001:0db8:010d::1 routes
```

Output Figure 29-4: Example output from **show bgp ipv6 neighbors** 2001:db8:b::1

```
awplus#show bgp ipv6 neighbors 2001:db8:b::1
BGP neighbor is 2001:db8:b::1, remote AS 200, local AS 100, external link
  BGP version 4, remote router ID 2.2.2.1
  BGP state = Established, up for 01:03:26
  Last read 01:03:26, hold time is 90, keepalive interval is 30 seconds
  Neighbor capabilities:
    Route refresh: advertised and received (old and new)
    4-Octet ASN Capability: advertised and received
    Address family IPv4 Unicast: advertised and received
    Address family IPv6 Unicast: advertised and received
  Received 157 messages, 0 notifications, 0 in queue
  Sent 228 messages, 0 notifications, 0 in queue
  Route refresh request: received 0, sent 0
  Minimum time between advertisement runs is 30 seconds
  Update source is lo
For address family: IPv4 Unicast
  BGP table version 1, neighbor version 1
  Index 2, Offset 0, Mask 0x4
  Community attribute sent to this neighbor (both)
  0 accepted prefixes
  0 announced prefixes

For address family: IPv6 Unicast
  BGP table version 66, neighbor version 66
  Index 2, Offset 0, Mask 0x4
  AF-dependant capabilities:
    Graceful restart: advertised, received

  Community attribute sent to this neighbor (both)
  Default information originate, default sent
  Inbound path policy configured
  Incoming update prefix filter list is *BGP_FILTER_LIST
  Route map for incoming advertisements is *BGP_LOCAL_PREF_MAP
  8 accepted prefixes
  8 announced prefixes

Connections established 1; dropped 0
Graceful-restart Status:
  Remote restart-time is 90 sec

  External BGP neighbor may be up to 2 hops away.
Local host: 2001:db8:a::1, Local port: 179
Foreign host: 2001:db8:b::1, Foreign port: 50672
Nexthop: 1.1.1.1
Nexthop global: 2001:db8:a::1
Nexthop local: ::
BGP connection: non shared network
```

If available the following is shown:

- Session information
  - Neighbor address, ASN information and if the link is external or internal
  - BGP version and status
  - Neighbor capabilities for the BGP session
  - Number of messages transmitted and received
- IPv6 unicast address family information
  - BGP4+ table version
  - IPv6 Address Family dependent capabilities
  - IPv6 Communities
  - IPv6 Route filters for ingress and egress updates
  - Number of announced and accepted IPv6 prefixes
- Connection information
  - Connection counters
  - Graceful restart timer
  - Hop count to the peer
  - Next hop information
  - Local and external port numbers

Related Commands show ip bgp neighbors (BGP only)

show bgp ipv6 paths (BGP4+ only)

Overview Use this command to display BGP4+ path information within an IPv6 environment. Use the show ip bgp paths (BGP only) command to display BGP path information within an IPv4 environment.

For information on filtering and saving command output, see the "Getting Started with AlliedWare Plus" Feature Overview and Configuration Guide.

Syntax
```
show bgp ipv6 paths
```

Mode User Exec and Privileged Exec

Example
```
awplus# show bgp ipv6 paths
```

Related Commands show ip bgp paths (BGP only)

show bgp ipv6 prefix-list (BGP4+ only)

Overview Use this command to display routes matching the prefix-list within an IPv6 environment. Use the show ip bgp prefix-list (BGP only) command to display routes matching the prefix-list within an IPv4 environment.

For information on filtering and saving command output, see the "Getting Started with AlliedWare Plus" Feature Overview and Configuration Guide.

Syntax

```
show bgp ipv6 prefix-list <list>
```

Parameter	Description
<list>	Specifies the name of the IPv6 prefix list.

Mode User Exec and Privileged Exec

Example

```
awplus# show bgp ipv6 prefix-list mylist
```

Related Commands show ip bgp prefix-list (BGP only)

show bgp ipv6 quote-regexp (BGP4+ only)

Overview Use this command to display routes matching the AS path regular expression within an IPv6 environment. Use the show ip bgp quote-regexp (BGP only) command to display routes matching the AS path regular expression within an IPv4 environment.

Note that you must use quotes to enclose the regular expression with this command. Use the regular expressions listed below with the *<expression>* parameter:

Symbol	Character	Meaning
^	Caret	Used to match the beginning of the input string. When used at the beginning of a string of characters, it negates a pattern match.
$	Dollar sign	Used to match the end of the input string.
.	Period	Used to match a single character (white spaces included).
*	Asterisk	Used to match none or more sequences of a pattern.
+	Plus sign	Used to match one or more sequences of a pattern.
?	Question mark	Used to match none or one occurrence of a pattern.
_	Underscore	Used to match spaces, commas, braces, parenthesis, or the beginning and end of an input string.
[ ]	Brackets	Specifies a range of single-characters.
-	Hyphen	Separates the end points of a range.

For information on filtering and saving command output, see the "Getting Started with AlliedWare Plus" Feature Overview and Configuration Guide.

Syntax
```
show bgp ipv6 quote-regexp <expression>
```

Mode User Exec and Privileged Exec

Example
```
awplus# show bgp ipv6 quote-regexp myexpression
```

Related Commands show ip bgp quote-regexp (BGP only)

show bgp ipv6 regexp (BGP4+ only)

Overview Use this command to display routes matching the AS path regular expression within an IPv6 environment. Use the show ip bgp regexp (BGP only) command to display routes matching the AS path regular expression within an IPv4 environment.

Use the regular expressions listed below with the <*expression*> parameter:

Symbol	Character	Meaning
^	Caret	Used to match the beginning of the input string. When used at the beginning of a string of characters, it negates a pattern match.
$	Dollar sign	Used to match the end of the input string.
.	Period	Used to match a single character (white spaces included).
*	Asterisk	Used to match none or more sequences of a pattern.
+	Plus sign	Used to match one or more sequences of a pattern.
?	Question mark	Used to match none or one occurrence of a pattern.
_	Underscore	Used to match spaces, commas, braces, parenthesis, or the beginning and end of an input string.
[ ]	Brackets	Specifies a range of single-characters.
-	Hyphen	Separates the end points of a range.

For information on filtering and saving command output, see the "Getting Started with AlliedWare Plus" Feature Overview and Configuration Guide.

Syntax

```
show bgp ipv6 regexp <expression>
```

Parameter	Description
<*expression*>	Specifies a regular-expression to match the BGP4+ AS paths.

Mode User Exec and Privileged Exec

Example

```
awplus# show bgp ipv6 regexp myexpression
```

Related Commands show ip bgp regexp (BGP only)

show bgp ipv6 route-map (BGP4+ only)

Overview Use this command to display BGP4+ routes that match the specified route-map within an IPv6 environment. Use the show ip bgp route-map (BGP only) command to display BGP routes that match the specified route-map within an IPv4 environment.

For information on filtering and saving command output, see the "Getting Started with AlliedWare Plus" Feature Overview and Configuration Guide.

Syntax

```
show bgp ipv6 route-map <route-map>
```

Parameter	Description
<route-map>	Specifies a route-map that is matched.

Mode User Exec and Privileged Exec

Example To show routes that match the route-map `myRouteMap`, use the command:

```
awplus# show bgp ipv6 route-map myRouteMap
```

Related Commands show ip bgp route-map (BGP only)

show bgp ipv6 summary (BGP4+ only)

Overview Use this command to display a summary of a BGP4+ neighbor status within an IPv6 environment. Use the show ip bgp summary (BGP only) command to display a summary of a BGP neighbor status within an IPv4 environment.

For information on filtering and saving command output, see the "Getting Started with AlliedWare Plus" Feature Overview and Configuration Guide.

Syntax

```
show bgp ipv6 summary
```

Mode User Exec and Privileged Exec

Example

```
awplus# show bgp ipv6 summary
```

Output Figure 29-5: Example output from the **show ip bgp summary** command

```
awplus>show ip bgp summary

BGP router identifier 1.0.0.1, local AS number 65541
BGP table version is 12
4 BGP AS-PATH entries
0 BGP community entries

Neighbor           V         AS   MsgRc  MsgSnt TblVer InOutQ Up/Down   State/PfxRcd
2001:0db8:cccc::1  4      65544      20      24     11 0/0    00:07:19          1
2001:0db8:dddd::1  4      65545       0       0      0 0/0    never         Active
2001:0db8:eeee::1  4      65542      34      40      0 0/0    00:00:04      Active
2001:0db8:ffff::1  4      65543      29      32     11 0/0    00:07:03         13

Number of neighbors 4
```

The Up/Down column in this output is a timer that shows:

- "never" if the peer session has never been established
- The up time, if the peer session is currently up
- The down time, if the peer session is currently down.

In the example above, the session with 2001:0db8:eeee::1 has been down for 4 seconds, and the session with 2001:0db8:dddd::1 has never been established.

Related Commands show ip bgp summary (BGP only)

show bgp memory maxallocation (BGP only)

Overview This command displays the maximum percentage of total memory that is allocated to BGP processes.

For information on filtering and saving command output, see the "Getting Started with AlliedWare Plus" Feature Overview and Configuration Guide.

Syntax

```
show bgp memory maxallocation
```

Mode User Exec and Privileged Exec

Example To display the maximum amount of memory allocated for BGP processes, use the command:

```
awplus# show bgp memory maxallocation
```

Output Figure 29-6: Example output from the **show bgp memory maxallocation** command

```
BGP maximum RAM allocation is 100%
```

show bgp nexthop-tracking (BGP only)

Overview Use this command to display BGP next hop tracking status.

Syntax
```
show bgp nexthop-tracking
```

Mode User Exec and Privileged Exec

Example To display BGP next hop tracking status, use the command:

```
awplus# show bgp nexthop-tracking
```

Related Commands
bgp nexthop-trigger-count

show bgp nexthop-tree-details (BGP only)

show bgp nexthop-tree-details (BGP only)

Overview Use this command to display BGP next hop tree details.

Syntax

```
show bgp nexthop-tree-details
```

Mode User Exec and Privileged Exec

Example To display BGP next hop tree details, use the command:

```
awplus# show bgp nexthop-tree-details
```

Related Commands show bgp nexthop-tracking (BGP only)

show debugging bgp (BGP only)

Overview Use this command to display the BGP debugging option set.

For information on filtering and saving command output, see the "Getting Started with AlliedWare Plus" Feature Overview and Configuration Guide.

Syntax

```
show debugging bgp
```

Mode User Exec and Privileged Exec

Example

```
awplus# show debugging bgp
```

Output Figure 29-7: Example output from the **show debugging bgp** command

```
BGP debugging status:
  BGP debugging is on
  BGP events debugging is on
  BGP updates debugging is on
  BGP fsm debugging is on
```

Related Commands debug bgp (BGP only)

show ip bgp (BGP only)

Overview Use this command to display BGP network information.

For information on filtering and saving command output, see the "Getting Started with AlliedWare Plus" Feature Overview and Configuration Guide.

Syntax

```
show ip bgp [<ip-addr>|<ip-addr/m>]
```

Parameter	Description
<ip-addr> *<ip-addr/m>*	Specifies the IPv4 address and the optional prefix mask length.

Mode User Exec and Privileged Exec

Example

```
awplus# show ip bgp 10.10.1.34/24
```

Output Figure 29-8: Example output from the **show ip bgp** command

```
BGP table version is 7, local router ID is 80.80.80.80
Status codes: s suppressed, d damped, h history, * valid, >
best, i - internal, S Stale
Origin codes: i - IGP, e - EGP, ? - incomplete

   Network          Next Hop            Metric LocPrf Weight
Path
S>i10.70.0.0/24     192.10.23.67             0    100      0 ?
S>i30.30.30.30/32   192.10.23.67             0    100      0 ?
S>i63.63.63.1/32    192.10.23.67             0    100      0 ?
S>i67.67.67.67/32   192.10.23.67             0    100      0 ?
S>i172.22.10.0/24   192.10.23.67             0    100      0 ?
S>i192.10.21.0      192.10.23.67             0    100      0 ?
S>i192.10.23.0      192.10.23.67             0    100      0 ?

Total number of prefixes 7
```

Related Commands neighbor remove-private-AS (BGP only)

show ip bgp attribute-info (BGP only)

Overview Use this command to show internal attribute hash information.

For information on filtering and saving command output, see the "Getting Started with AlliedWare Plus" Feature Overview and Configuration Guide.

Syntax

```
show ip bgp attribute-info
```

Mode User Exec and Privileged Exec

Example

```
awplus# show ip bgp attribute-info
```

Output Figure 29-9: Example output from the **show ip bgp attribute-info** command

```
attr[1] nexthop 0.0.0.0
attr[1] nexthop 10.10.10.10
attr[1] nexthop 10.10.10.50
```

show ip bgp cidr-only (BGP only)

Overview Use this command to display routes with non-natural network masks.

For information on filtering and saving command output, see the "Getting Started with AlliedWare Plus" Feature Overview and Configuration Guide.

Syntax
```
show ip bgp cidr-only
```

Syntax [VRF]
```
show ip bgp [global|vrf <vrf-name>] cidr-only
```

Parameter	Description
`global`	When VRF-lite is configured, apply the command to the global routing and forwarding table.
`vrf`	Apply the command to the specified VRF instance.
`<vrf-name>`	The name of the VRF instance.

Mode User Exec and Privileged Exec

Example
```
awplus# show ip bgp cidr-only
awplus# show ip bgp vrf red cidr-only
```

Output Figure 29-10: Example output from the **show ip bgp cidr-only** command

```
BGP table version is 0, local router ID is 10.10.10.50

Status codes: s suppressed, d damped, h history, p stale, *
valid, > best, i - internal

Origin codes: i - IGP, e - EGP, ? - incomplete

   Network          Next Hop            Metric LocPrf Weight Path
*> 3.3.3.0/24       10.10.10.10                              0 11 i
*> 6.6.6.0/24       0.0.0.0                              32768 i

Total number of prefixes 2
```

Command changes Version 5.4.6-2.1: VRF-lite support added.

show ip bgp community (BGP only)

Overview Use this command to display routes that match specified communities from a BGP instance within an IPv4 environment. Use the show bgp ipv6 community (BGP4+ only) command within an IPv6 environment.

For information on filtering and saving command output, see the "Getting Started with AlliedWare Plus" Feature Overview and Configuration Guide.

You may use any combination and repetition of parameters listed in the *<type>* placeholder.

Syntax
```
show ip bgp community [<type>] [exact-match]
```

Syntax [VRF]
```
show ip bgp [global|vrf <vrf-name>] community  [<type>]
[exact-match]
```

Parameter	Description	
`global`	When VRF-lite is configured, apply the command to the global routing and forwarding table.	
`vrf`	Apply the command to the specified VRF instance.	
<vrf-name>	The name of the VRF instance.	
<type>	{[*AA:NN*][local-AS][no-advertise][no-export]}	
	AA:NN	Specifies the Autonomous System (AS) community number, in AA:NN format.
	`local-AS`	Do not send outside local Autonomous Systems (well-known community).
	`no-advertise`	Do not advertise to any peer (well-known community).
	`no-export`	Do not export to next AS (well-known community).
`exact-match`	Specifies that the exact match of the communities is displayed. This optional parameter cannot be repeated.	

Mode User Exec and Privileged Exec

Examples

Note that the AS numbers shown are examples only.

```
awplus# show ip bgp community 64497:64499 exact-match
awplus# show ip bgp community 64497:64499 64500:64501
exact-match
awplus# show ip bgp community 64497:64499 64500:64501
64510:64511no-advertise
awplus# show ip bgp community no-advertise
no-advertiseno-advertise exact-match
awplus# show ip bgp community no-export 64510:64511
no-advertise local-AS no-export
awplus# show ip bgp community no-export 64510:64511
no-advertise 64497:64499 64500:64501 no-export
awplus# show ip bgp community no-export 64497:64499
no-advertise local-AS no-export
awplus# show ip bgp vrf red no-export
awplus# show ip bgp global 65500:2 65500:3 exact-match
```

Related Commands

set community

show bgp ipv6 community (BGP4+ only)

Command changes

Version 5.4.6-2.1: VRF-lite support added.

show ip bgp community-info (BGP only)

Overview Use this command to list all BGP community information.

For information on filtering and saving command output, see the "Getting Started with AlliedWare Plus" Feature Overview and Configuration Guide.

Syntax

```
show ip bgp community-info
```

Mode User Exec and Privileged Exec

Example

```
awplus# show ip bgp community-info
```

show ip bgp community-list (BGP only)

Overview Use this command to display routes that match the given community-list from a BGP instance within an IPv4 environment. Use the show bgp ipv6 community-list (BGP4+ only) command within an IPv6 environment.

For information on filtering and saving command output, see the "Getting Started with AlliedWare Plus" Feature Overview and Configuration Guide.

Syntax
```
show ip bgp community-list <listname> [exact-match]
```

Syntax [VRF]
```
show ip bgp [global|vrf <vrf-name>] community-list <listname>
[exact-match]
```

Parameter	Description
`global`	When VRF-lite is configured, apply the command to the global routing and forwarding table.
`vrf`	Apply the command to the specified VRF instance.
<vrf-name>	The name of the VRF instance.
<listname>	Specifies the community list name.
`exact-match`	Displays only routes that have exactly the same specified communities.

Mode User Exec and Privileged Exec

Example
```
awplus# show ip bgp community-list mylist exact-match
awplus# show ip bgp vrf red community-list myCommunity
awplus# show ip bgp global community-list myExactCommunity
exact-match
```

Related Commands show bgp ipv6 community-list (BGP4+ only)

Command changes Version 5.4.6-2.1: VRF-lite support added.

show ip bgp dampening (BGP only)

Overview Use this command to show dampened routes from a BGP instance within an IPv4 environment. Use the show bgp ipv6 dampening (BGP4+ only) command within an IPv6 environment.

For information on filtering and saving command output, see the "Getting Started with AlliedWare Plus" Feature Overview and Configuration Guide.

Syntax
```
show ip bgp dampening
{dampened-paths|flap-statistics|parameters}
```

Syntax [VRF]
```
show ip bgp [global|vrf <vrf-name>] dampening
{dampened-paths|flap-statistics|parameters}
```

Parameter	Description
`global`	When VRF-lite is configured, apply the command to the global routing and forwarding table.
`vrf`	Apply the command to the specified VRF instance.
`<vrf-name>`	The name of the VRF instance.
`dampened-paths`	Display paths suppressed due to dampening.
`flap-statistics`	Display flap statistics of routes.
`parameters`	Display details of configured dampening parameters.

Mode User Exec and Privileged Exec

Usage Enable BGP dampening to maintain dampened-path information in memory.

Examples
```
awplus# show ip bgp dampening dampened-paths
awplus# show ip bgp vrf red dampening dampened-paths
awplus# show ip bgp global dampening flap-statistics
```

Output Figure 29-11: Example output from the **show ip bgp dampening** command

```
dampening 15 750 2000 60 15
 Reachability Half-Life time    : 15 min
 Reuse penalty                  : 750
 Suppress penalty               : 2000
 Max suppress time              : 60 min
 Un-reachability Half-Life time : 15 min
 Max penalty (ceil)             : 11999
 Min penalty (floor)            : 375
```

The following example output shows that the internal route (`i`), has flapped 3 times and is now categorized as history (`h`).

Figure 29-12: Example output from the **show ip bgp dampening flap-statistics** command

```
awplus# show ip bgp dampening flap-statistics
BGP table version is 1, local router ID is 30.30.30.77
Status codes: s suppressed, d damped, h history, * valid, > best, i - internal,S
Stale
Origin codes: i - IGP, e - EGP, ? - incomplete
   Network          From            Flaps  Duration  Reuse    Path
 hi1.1.1.0/24       10.100.0.62        3   00:01:20           i
```

The following example output shows a dampened route in the `1.1.1.0/24` network.

Figure 29-13: Example output from the **show ip bgp dampening dampened-path** command

```
awplus# show ip bgp dampening dampened-paths
BGP table version is 1, local router ID is 30.30.30.77
Status codes: s suppressed, d damped, h history, * valid, > best, i - internal,S
Stale
Origin codes: i - IGP, e - EGP, ? - incomplete

     Network          From            Reuse     Path
 di 1.1.1.0/24       10.100.0.62     00:35:10     i

Total number of prefixes 1
```

Related Commands show bgp ipv6 dampening (BGP4+ only)

Command changes Version 5.4.6-2.1: VRF-lite support added.

show ip bgp filter-list (BGP only)

Overview Use this command to display routes conforming to the filter-list within an IPv4 environment. Use the show bgp ipv6 filter-list (BGP4+ only) command to display routes conforming to the filter-list within an IPv6 environment

For information on filtering and saving command output, see the "Getting Started with AlliedWare Plus" Feature Overview and Configuration Guide.

Syntax
```
show ip bgp filter-list <listname>
```

Syntax [VRF]
```
show ip bgp [global|vrf <vrf-name>] filter-list <listname>
```

Parameter	Description
`global`	When VRF-lite is configured, apply the command to the global routing and forwarding table.
`vrf`	Apply the command to the specified VRF instance.
<vrf-name>	The name of the VRF instance.
<listname>	Specifies the regular-expression access list name.

Mode User Exec and Privileged Exec

Example
```
awplus# show ip bgp filter-list mylist
awplus# show ip bgp vrf red filter-list mylist
```

Related Commands show bgp ipv6 filter-list (BGP4+ only)

Command changes Version 5.4.6-2.1: VRF-lite support added.

show ip bgp inconsistent-as (BGP only)

Overview Use this command to display routes with inconsistent AS Paths within an IPv4 environment. Use the show bgp ipv6 inconsistent-as (BGP4+ only) command to display routes with inconsistent AS paths within an IPv6 environment.

For information on filtering and saving command output, see the "Getting Started with AlliedWare Plus" Feature Overview and Configuration Guide.

Syntax
```
show ip bgp inconsistent-as
```

Syntax [VRF]
```
show ip bgp [global|vrf <vrf-name>] inconsistent-as
```

Parameter	Description
`global`	When VRF-lite is configured, apply the command to the global routing and forwarding table.
`vrf`	Apply the command to the specified VRF instance.
`<vrf-name>`	The name of the VRF instance.

Mode User Exec and Privileged Exec

Example
```
awplus# show ip bgp inconsistent-as
awplus# show ip bgp global inconsistent-as
```

Related Commands show bgp ipv6 inconsistent-as (BGP4+ only)

Command changes Version 5.4.6-2.1: VRF-lite support added.

show ip bgp longer-prefixes (BGP only)

Overview Use this command to display the route of the local BGP routing table for a specific prefix with a specific mask, or for any prefix having a longer mask than the one specified.

For information on filtering and saving command output, see the "Getting Started with AlliedWare Plus" Feature Overview and Configuration Guide.

Syntax
```
show ip bgp <ip-address/m> longer-prefixes
```

Syntax [VRF]
```
show ip bgp [global|vrf <vrf-name>] <ip-address/m>
longer-prefixes
```

Parameter	Description
`global`	When VRF-lite is configured, apply the command to the global routing and forwarding table.
`vrf`	Apply the command to the specified VRF instance.
`<vrf-name>`	The name of the VRF instance.
`<ip-address/m>`	Neighbor's IP address and subnet mask, entered in the form A.B.C.D/M, where M is the subnet mask length.

Mode User Exec and Privileged Exec

Example
```
awplus# show ip bgp 10.10.0.10/24 longer-prefixes
awplus# show ip bgp vrf red 172.16.4.0/24
awplus# show ip bgp global 172.16.0.0/16 longer-prefixes
```

Command changes Version 5.4.6-2.1: VRF-lite support added.

show ip bgp neighbors (BGP only)

Overview Use this command to display detailed information on peering connections to all BGP neighbors within an IPv4 environment.

Use the show bgp ipv6 neighbors (BGP4+ only) command to display detailed information on peering connections to all BGP4+ neighbors within an IPv6 environment.

For information on filtering and saving command output, see the "Getting Started with AlliedWare Plus" Feature Overview and Configuration Guide.

Syntax [BGP]

```
show ip bgp neighbors [<ipv4-addr> [advertised-routes|received
prefix-filter|received-routes|routes]]
```

Syntax [VRF]

```
show ip bgp [global|vrf <vrf-name>] neighbors [<ipv4-addr>
routes]
```

Parameter	Description
<ipv4-addr>	The IPv4 address of an IPv4 BGP neighbor, in dotted decimal notation A.B.C.D.
`advertised-routes`	Displays the routes advertised to a BGP neighbor.
`received prefix-filter`	Displays the received prefix-list filters.
`received-routes`	Displays the received routes from the neighbor. To display all the received routes from the neighbor, configure the BGP soft reconfigure first.
`routes`	Displays all accepted routes learned from neighbors.
`global`	When VRF-lite is configured, apply the command to the global routing and forwarding table.
`vrf`	Apply the command to the specified VRF instance.
<vrf-name>	The name of the VRF instance.

Mode [BGP] User Exec and Privileged Exec

Examples [BGP]

```
awplus# show ip bgp neighbors 10.10.10.72 advertised-routes
awplus# show ip bgp neighbors 10.10.10.72 received
prefix-filter
awplus# show ip bgp neighbors 10.10.10.72 received-routes
awplus# show ip bgp neighbors 10.10.10.72 routes
```

Output Figure 29-14: Example output from **show ip bgp neighbors 10.10.10.72**

```
awplus#show ip bgp neighbors 10.10.10.72
BGP neighbor is 10.10.10.72, remote AS 100, local AS 100, internal
 link
 Member of peer-group group1 for session parameters
  BGP version 4, remote router ID 0.0.0.0
  BGP state = Active
  Last read         , hold time is 90, keepalive interval is 30 seconds
  Received 0 messages, 0 notifications, 0 in queue
  Sent 0 messages, 0 notifications, 0 in queue
  Route refresh request: received 0, sent 0
  Minimum time between advertisement runs is 5 seconds
 For address family: IPv4 Unicast
  BGP table version 1, neighbor version 0
  Index 1, Offset 0, Mask 0x2
  group1 peer-group member
  NEXT_HOP is always this router
  0 accepted prefixes
  0 announced prefixes

 Connections established 0; dropped 0
Next connect timer due in 33 seconds
```

If available the following is shown:

- Session information
  - Neighbor address, ASN information and if the link is external or internal
  - BGP version and status
  - Neighbor capabilities for the BGP session
  - Number of messages transmitted and received
- IPv4 unicast address family information
  - BGP table version
  - IPv4 Address Family dependent capabilities
  - IPv4 Communities
  - IPv4 Route filters for ingress and egress updates
  - Number of announced and accepted IPv4 prefixes
- Connection information
  - Connection counters
  - Graceful restart timer
  - Hop count to the peer
  - Next hop information
  - Local and external port numbers

Related Commands show bgp ipv6 neighbors (BGP4+ only)

Command changes Version 5.4.6-2.1: VRF-lite support added.

show ip bgp neighbors connection-retrytime (BGP only)

Overview Use this command to display the configured connection-retrytime value of the peer at the session establishment time with the neighbor.

For information on filtering and saving command output, see the "Getting Started with AlliedWare Plus" Feature Overview and Configuration Guide.

Syntax

```
show ip bgp neighbors <ipv4-addr> connection-retrytime
```

Parameter	Description
<ipv4-addr>	The IPv4 address of an IPv4 BGP neighbor, in dotted decimal notation A.B.C.D.

Mode User Exec and Privileged Exec

Example

```
awplus# show ip bgp neighbors 10.11.4.26 connection-retrytime
```

show ip bgp neighbors hold-time (BGP only)

Overview Use this command to display the configured holdtime value of the peer at the session establishment time with the neighbor.

For information on filtering and saving command output, see the "Getting Started with AlliedWare Plus" Feature Overview and Configuration Guide.

Syntax

```
show ip bgp neighbors <ipv4-addr> hold-time
```

Parameter	Description
<ipv4-addr>	The IPv4 address of an IPv4 BGP neighbor, in dotted decimal notation A.B.C.D.

Default The holdtime timer default is 90 seconds as per RFC 4271. Holdtime is keepalive * 3.

Mode User Exec and Privileged Exec

Examples

```
awplus# show ip bgp neighbors 10.11.4.26 hold-time
```

Related Commands

neighbor timers

show ip bgp neighbors keepalive-interval (BGP only)

timers (BGP)

show ip bgp neighbors keepalive (BGP only)

Overview Use this command to display the number of keepalive messages sent to the neighbor from the peer throughout the session.

For information on filtering and saving command output, see the "Getting Started with AlliedWare Plus" Feature Overview and Configuration Guide.

Syntax

```
show ip bgp neighbors <ipv4-addr> keepalive
```

Parameter	Description
<ipv4-addr>	The IPv4 address of an IPv4 BGP neighbor, in dotted decimal notation A.B.C.D.

Mode User Exec and Privileged Exec

Examples

```
awplus# show ip bgp neighbors 10.11.4.26 keepalive
```

Related Commands show ip bgp neighbors keepalive-interval (BGP only)

show ip bgp neighbors keepalive-interval (BGP only)

Overview Use this command to display the configured keepalive-interval value of the peer at the session establishment time with the neighbor.

For information on filtering and saving command output, see the "Getting Started with AlliedWare Plus" Feature Overview and Configuration Guide.

Syntax

```
show ip bgp neighbors <ipv4-addr> keepalive-interval
```

Parameter	Description
<ipv4-addr>	The IPv4 address of an IPv4 BGP neighbor, in dotted decimal notation A.B.C.D.

Default The keepalive timer default is 60 seconds as per RFC 4271. Keepalive is holdtime / 3.

Mode User Exec and Privileged Exec

Examples

```
awplus# show ip bgp neighbors 10.11.4.26 keepalive-interval
```

Related Commands

neighbor timers

show ip bgp neighbors hold-time (BGP only)

timers (BGP)

show ip bgp neighbors notification (BGP only)

Overview Use this command to display the number of notification messages sent to the neighbor from the peer throughout the session.

For information on filtering and saving command output, see the "Getting Started with AlliedWare Plus" Feature Overview and Configuration Guide.

Syntax

```
show ip bgp neighbors <ipv4-addr> notification
```

Parameter	Description
<ipv4-addr>	The IPv4 address of an IPv4 BGP neighbor, in dotted decimal notation A.B.C.D.

Mode User Exec and Privileged Exec

Example

```
awplus# show ip bgp neighbors 10.11.4.26 notification
```

show ip bgp neighbors open (BGP only)

Overview Use this command to display the number of open messages sent to the neighbor from the peer throughout the session.

For information on filtering and saving command output, see the "Getting Started with AlliedWare Plus" Feature Overview and Configuration Guide.

Syntax

```
show ip bgp neighbors <ipv4-addr> open
```

Parameter	Description
<ipv4-addr>	The IPv4 address of an IPv4 BGP neighbor, in dotted decimal notation A.B.C.D.

Mode User Exec and Privileged Exec

Example

```
awplus# show ip bgp neighbors 10.11.4.26 open
```

show ip bgp neighbors rcvd-msgs (BGP only)

Overview Use this command to display the number of messages received by the neighbor from the peer throughout the session.

For information on filtering and saving command output, see the "Getting Started with AlliedWare Plus" Feature Overview and Configuration Guide.

Syntax

```
show ip bgp neighbors <ipv4-addr> rcvd-msgs
```

Parameter	Description
<ipv4-addr>	The IPv4 address of an IPv4 BGP neighbor, in dotted decimal notation A.B.C.D.

Mode User Exec and Privileged Exec

Example

```
awplus# show ip bgp neighbors 10.11.4.26 rcvd-msgs
```

show ip bgp neighbors sent-msgs (BGP only)

Overview Use this command to display the number of messages sent to the neighbor from the peer throughout the session.

For information on filtering and saving command output, see the "Getting Started with AlliedWare Plus" Feature Overview and Configuration Guide.

Syntax

```
show ip bgp neighbors <ipv4-addr> sent-msgs
```

Parameter	Description
<ipv4-addr>	The IPv4 address of an IPv4 BGP neighbor, in dotted decimal notation A.B.C.D.

Mode User Exec and Privileged Exec

Example

```
awplus# show ip bgp neighbors 10.11.4.26 sent-msgs
```

show ip bgp neighbors update (BGP only)

Overview Use this command to display the number of update messages sent to the neighbor from the peer throughout the session.

For information on filtering and saving command output, see the "Getting Started with AlliedWare Plus" Feature Overview and Configuration Guide.

Syntax

```
show ip bgp neighbors <ipv4-addr> update
```

Parameter	Description
<ipv4-addr>	The IPv4 address of an IPv4 BGP neighbor, in dotted decimal notation A.B.C.D.

Mode User Exec and Privileged Exec

Example

```
awplus# show ip bgp neighbors 10.11.4.26 update
```

show ip bgp paths (BGP only)

Overview Use this command to display BGP4 path information within an IPv4 environment. Use the show bgp ipv6 paths (BGP4+ only) command to display BGP4+ path information within an IPv4 environment.

For information on filtering and saving command output, see the "Getting Started with AlliedWare Plus" Feature Overview and Configuration Guide.

Syntax

```
show ip bgp paths
```

Mode User Exec and Privileged Exec

Example

```
awplus# show ip bgp paths
```

Related Commands show bgp ipv6 paths (BGP4+ only)

show ip bgp prefix-list (BGP only)

Overview Use this command to display routes matching the prefix-list within an IPv4 environment. Use the show bgp ipv6 prefix-list (BGP4+ only) command to display routes matching the prefix-list within an IPv6 environment.

For information on filtering and saving command output, see the "Getting Started with AlliedWare Plus" Feature Overview and Configuration Guide.

Syntax
```
show ip bgp prefix-list <list>
```

Syntax [VRF]
```
show ip bgp [global|vrf <vrf-name>] prefix-list <list>
```

Parameter	Description
`global`	When VRF-lite is configured, apply the command to the global routing and forwarding table.
`vrf`	Apply the command to the specified VRF instance.
`<vrf-name>`	The name of the VRF instance.
`<list>`	Specifies the name of the IP prefix list.

Mode User Exec and Privileged Exec

Examples
```
awplus# show ip bgp prefix-list mylist
awplus# show ip bgp vrf red prefix-list myPrefixes
```

Related Commands show bgp ipv6 prefix-list (BGP4+ only)

Command changes Version 5.4.6-2.1: VRF-lite support added.

show ip bgp quote-regexp (BGP only)

Overview Use this command to display routes matching the AS path regular expression within an IPv4 environment. Use the show bgp ipv6 quote-regexp (BGP4+ only) command to display routes matching the AS path regular expression within an IPv6 environment.

Note that you must use quotes to enclose the regular expression with this command. Use the regular expressions listed below with the *<expression>* parameter:

Symbol	Character	Meaning
^	Caret	Used to match the beginning of the input string. When used at the beginning of a string of characters, it negates a pattern match.
$	Dollar sign	Used to match the end of the input string.
.	Period	Used to match a single character (white spaces included).
*	Asterisk	Used to match none or more sequences of a pattern.
+	Plus sign	Used to match one or more sequences of a pattern.
?	Question mark	Used to match none or one occurrence of a pattern.
_	Underscore	Used to match spaces, commas, braces, parenthesis, or the beginning and end of an input string.
[ ]	Brackets	Specifies a range of single-characters.
–	Hyphen	Separates the end points of a range.

For information on filtering and saving command output, see the "Getting Started with AlliedWare Plus" Feature Overview and Configuration Guide.

Syntax `show ip bgp quote-regexp <expression>`

Syntax [VRF] `show ip bgp [global|vrf <vrf-name>] quote-regexp <expression>`

Parameter	Description
`global`	When VRF-lite is configured, apply the command to the global routing and forwarding table.
`vrf`	Apply the command to the specified VRF instance.
<vrf-name>	The name of the VRF instance.
<expression>	Specifies a regular-expression to match the BGP AS paths.

Mode User Exec and Privileged Exec

Examples

```
awplus# show ip bgp quote-regexp myexpression
awplus# show ip bgp global quote-regexp 65550 65555
```

Related Commands

show bgp ipv6 quote-regexp (BGP4+ only)

Command changes

Version 5.4.6-2.1: VRF-lite support added.

show ip bgp regexp (BGP only)

Overview Use this command to display routes matching the AS path regular expression within an IPv4 environment. Use the show bgp ipv6 regexp (BGP4+ only) command to display routes matching the AS path regular expression within an IPv6 environment.

Use the regular expressions listed below with the <*expression*> parameter:

Symbol	Character	Meaning
^	Caret	Used to match the beginning of the input string. When used at the beginning of a string of characters, it negates a pattern match.
$	Dollar sign	Used to match the end of the input string.
.	Period	Used to match a single character (white spaces included).
*	Asterisk	Used to match none or more sequences of a pattern.
+	Plus sign	Used to match one or more sequences of a pattern.
?	Question mark	Used to match none or one occurrence of a pattern.
_	Underscore	Used to match spaces, commas, braces, parenthesis, or the beginning and end of an input string.
[ ]	Brackets	Specifies a range of single-characters.
-	Hyphen	Separates the end points of a range.

For information on filtering and saving command output, see the "Getting Started with AlliedWare Plus" Feature Overview and Configuration Guide.

Syntax
```
show ip bgp regexp <expression>
```

Syntax [VRF]
```
show ip bgp [global|vrf <vrf-name>] regexp <expression>
```

Parameter	Description
global	When VRF-lite is configured, apply the command to the global routing and forwarding table.
vrf	Apply the command to the specified VRF instance.
<*vrf-name*>	The name of the VRF instance.
<*expression*>	Specifies a regular-expression to match the BGP AS paths.

Mode User Exec and Privileged Exec

Examples

```
awplus# show ip bgp regexp myexpression
awplus# show ip bgp vrf red regexp 65550 65555
```

Related Commands

show bgp ipv6 regexp (BGP4+ only)

Command changes

Version 5.4.6-2.1: VRF-lite support added.

show ip bgp route-map (BGP only)

Overview Use this command to display BGP routes that match the specified route-map within an IPv4 environment. Use the show bgp ipv6 route-map (BGP4+ only) command to display BGP4+ routes that match the specified route-map within an IPv6 environment.

For information on filtering and saving command output, see the "Getting Started with AlliedWare Plus" Feature Overview and Configuration Guide.

Syntax
```
show ip bgp route-map <route-map>
```

Syntax [VRF]
```
show ip bgp [global|vrf <vrf-name>] route-map <route-map>
```

Parameter	Description
`global`	When VRF-lite is configured, apply the command to the global routing and forwarding table.
`vrf`	Apply the command to the specified VRF instance.
<vrf-name>	The name of the VRF instance.
<route-map>	Specifies a route-map that is matched.

Mode User Exec and Privileged Exec

Examples To show routes that match the route-map `myRouteMap` for the global routing instance, use the command:

```
awplus# show ip bgp global route-map myRouteMap
```

To show routes that match the route-map `myRouteMap`, use the command:

```
awplus# show ip bgp route-map myRouteMap
```

Related Commands show bgp ipv6 route-map (BGP4+ only)

Command changes Version 5.4.6-2.1: VRF-lite support added.

show ip bgp scan (BGP only)

Overview Use this command to display BGP scan status.

For information on filtering and saving command output, see the "Getting Started with AlliedWare Plus" Feature Overview and Configuration Guide.

Syntax

```
show ip bgp scan
```

Mode User Exec and Privileged Exec

Example

```
awplus# show ip bgp scan
```

Output Figure 29-15: Example output from the **show ip bgp scan** command

```
BGP scan is running
BGP scan interval is 60
BGP instance : AS is 11,DEFAULT
Current BGP nexthop cache:
BGP connected route:
 10.10.10.0/24
 10.10.11.0/24
```

show ip bgp summary (BGP only)

Overview Use this command to display a summary of a BGP neighbor status within an IPv4 environment. Use the show bgp ipv6 summary (BGP4+ only) command to display a summary of BGP4+ neighbors.

For information on filtering and saving command output, see the "Getting Started with AlliedWare Plus" Feature Overview and Configuration Guide.

Syntax
```
show ip bgp summary
```

Syntax [VRF]
```
show ip bgp [global|vrf <vrf-name>] summary
```

Parameter	Description
`global`	When VRF-lite is configured, apply the command to the global routing and forwarding table.
`vrf`	Apply the command to the specified VRF instance.
`<vrf-name>`	The name of the VRF instance.

Mode User Exec and Privileged Exec

Examples
```
awplus# show ip bgp summary
awplus# show ip bgp vrf red summary
```

Output Figure 29-16: Example output from the **show ip bgp summary** command

```
awplus>show ip bgp summary

BGP router identifier 1.0.0.1, local AS number 65541
BGP table version is 12
4 BGP AS-PATH entries
0 BGP community entries

Neighbor        V         AS   MsgRc  MsgSnt TblVer InOutQ Up/Down   State/PfxRcd
192.168.3.2     4      65544      20      24     11 0/0    00:07:19          1
192.168.4.2     4      65545       0       0      0 0/0    never         Active
192.168.11.2    4      65542      34      40      0 0/0    00:00:04      Active
192.168.21.2    4      65543      29      32     11 0/0    00:07:03         13

Number of neighbors 4
```

The Up/Down column in this output is a timer that shows:

- "never" if the peer session has never been established
- The up time, if the peer session is currently up
- The down time, if the peer session is currently down.

In the example above, the session with 192.168.11.2 has been down for 4 seconds, and the session with 192.168.4.2 has never been established.

Related Commands show bgp ipv6 summary (BGP4+ only)

Command changes Version 5.4.6-2.1: VRF-lite support added.

show ip community-list

Overview Use this command to display routes that match a specified community-list name or number.

For information on filtering and saving command output, see the "Getting Started with AlliedWare Plus" Feature Overview and Configuration Guide.

Syntax

```
show ip community-list [<listnumber>|<listname>]
```

Parameter	Description
<listnumber>	Specifies the community list number in the range <1-199> as specified by a previously issued **ip community-list** command.
<listname>	Specifies the community list name as specified by a previously issued ip community-list command.

Mode User Exec and Privileged Exec

Examples

```
awplus# show ip community-list mylist
awplus# show ip community-list 99
```

Related Commands

ip community-list

ip community-list expanded

ip community-list standard

show ip extcommunity-list

Overview Use this command to display a configured extcommunity-list.

For information on filtering and saving command output, see the "Getting Started with AlliedWare Plus" Feature Overview and Configuration Guide.

Syntax

```
show ip extcommunity-list [<1-199>|<extcommunity-listname>]
```

Parameter	Description
<1-199>	Extcommunity-list number
<extcommunity-listname>	Extcommunity-list name

Mode User Exec and Privileged Exec

Example

```
awplus# show ip extcommunity-list 33
```

Related Commands

ip extcommunity-list expanded

ip extcommunity-list standard

show ip prefix-list (IPv4 Prefix List)

Overview Use this command to display the IPv4 prefix-list entries. Note that this command is valid for RIP and BGP routing protocols only.

Syntax

```
show ip prefix-list [<name>|detail|summary]
```

Parameter	Description
<name>	Specify the name of a prefix list in this placeholder.
`detail`	Specify this parameter to show detailed output for all IPv4 prefix lists.
`summary`	Specify this parameter to show summary output for all IPv4 prefix lists.

Mode User Exec and Privileged Exec

Example

```
awplus# show ip prefix-list
awplus# show ip prefix-list 10.10.0.98/8
awplus# show ip prefix-list detail
```

Related Commands ip prefix-list (IPv4 Prefix List)

show ip protocols bgp (BGP only)

Overview Use this command to display BGP process parameters and statistics.

For information on filtering and saving command output, see the "Getting Started with AlliedWare Plus" Feature Overview and Configuration Guide.

Syntax

```
show ip protocols bgp
```

Mode User Exec and Privileged Exec

Example To display BGP process parameters and statistics, use the command:

```
awplus# show ip protocols bgp
```

Output Figure 29-17: Example output from the **show ip protocols bgp** command

```
Routing Protocol is "bgp 100"
  IGP synchronization is disabled
  Automatic route summarization is disabled
  Default local-preference applied to incoming route is 100
  Redistributing:
  Neighbor(s):
  Address AddressFamily FiltIn FiltOut DistIn DistOut RouteMapIn RouteMapOut
Weight
10.10.10.1              unicast
```

show ipv6 prefix-list (IPv6 Prefix List)

Overview Use this command to display the prefix-list entries. Note that this command is valid for RIPng and BGP4+ routing protocols only.

Syntax

```
show ipv6 prefix-list [<name>|detail|summary]
```

Parameter	Description
<name>	Specify the name of an individual IPv6 prefix list.
`detail`	Specify this parameter to show detailed output for all IPv6 prefix lists.
`summary`	Specify this parameter to show summary output for all IPv6 prefix lists.

Mode User Exec and Privileged Exec

Example

```
awplus# show ipv6 prefix-list
awplus# show ipv6 prefix-list 10.10.0.98/8
awplus# show ipv6 prefix-list detail
```

Related Commands ipv6 prefix-list (IPv6 Prefix List)

show route-map

Overview Use this command to display information about one or all route maps.

Syntax

```
show route-map <map-name>
```

Parameter	Description
<map-name>	A name to identify the route map.

Mode User Exec and Privileged Exec

Example To display information about the route-map named `example-map`, use the command:

```
awplus# show route-map example-map
```

Output Figure 29-18: Example output from the **show route-map** command

```
route-map example-map, permit, sequence 1
  Match clauses:
    ip address prefix-list example-pref
  Set clauses:
    metric 100
route-map example-map, permit, sequence 200
  Match clauses:
  Set clauses:
```

Related Commands route-map

synchronization

Overview Use this command in Router Configuration mode or in Address Family Configuration mode to ensure BGP does not advertise router learned from iBGP peers until they are learned locally, or are propagated throughout the AS via an IGP.

Use the **no** variant of this command to disable this function.

Syntax

```
synchronization
no synchronization
```

Default Disabled.

Mode Router Configuration and Address Family Configuration mode

Usage Synchronization is used when a BGP router should not advertise routes learned from iBGP neighbors, unless those routes are also present in an IGP (for example, OSPF). These routes must be in the RIB (Routing Information Base) learned locally or via an IGP.

Synchronization may be enabled when all the routers in an autonomous system do not speak BGP, and the autonomous system is a transit for other autonomous systems.

Use the **no synchronization** command when BGP router can advertise routes learned from iBGP neighbors, without waiting for IGP reachability, when routes are in the RIB.

Example The following example enables IGP synchronization of iBGP routes in Router Configuration mode:

```
awplus# configure terminal
awplus(config)# router bgp 11
awplus(config-router)# synchronization
```

The following example enables IGP synchronization of iBGP routes in IPv4 unicast Address Family Configuration mode:

```
awplus# configure terminal
awplus(config)# router bgp 11
awplus(config)# address-family ipv4 unicast
awplus(config-af)# synchronization
```

The following example enables IGP synchronization of iBGP routes in the IPv6 unicast Address Family Configuration mode:

```
awplus# configure terminal
awplus(config)# router bgp 11
awplus(config)# address-family ipv6 unicast
awplus(config-af)# synchronization
```

timers (BGP)

Overview Use this command sets the BGP keepalive timer and holdtime timer values.

Use the **no** variant of this command to reset timers to the default.

Syntax

```
timers bgp <keepalive> <holdtime>
no timers bgp [<keepalive> <holdtime>]
```

Parameter	Description
<keepalive>	*<0-65535>* The frequency with which the keepalive messages are sent to the neighbors. The default is 30 seconds as per RFC 4271. Cisco IOS uses a 60 second keepalive timer default value. Adjust keepalive timers for interoperability as required. Maintain the keepalive value at the holdtime value / 3.
<holdtime>	*<0-65535>* The interval after which the neighbor is considered dead if keepalive messages are not received. The default holdtime value is 90 seconds as per RFC 4271. Cisco IOS uses a 180 second holdtime timer default value. Adjust holdtime timers for interoperability as required. Maintain the holdtime value at the keepalive value * 3.

Default The keepalive timer default is 60 seconds, the holdtime timer default is 90 seconds, and the connect timer default is 120 seconds as per RFC 4271. Holdtime is keepalive * 3.

Mode Router Configuration

Usage This command is used globally to set or unset the keepalive and holdtime values for all the neighbors.

Examples

```
awplus# configure terminal
awplus(config)# router bgp 10
awplus(config-router)# timers bgp 40 120
awplus# configure terminal
awplus(config)# router bgp 10
awplus(config-router)# no timers bgp 30 90
awplus# configure terminal
awplus(config)# router bgp 10
awplus(config-router)# no timers bgp
```

Related Commands

neighbor timers

show ip bgp neighbors hold-time (BGP only)

show ip bgp neighbors keepalive-interval (BGP only)

undebug bgp (BGP only)

Overview Use this command to disable BGP debugging functions.

Syntax

```
undebug bgp
[all|dampening|events|filters|fsm|keepalives|nht|nsm|updates]
undebug all bgp
```

Parameter	Description
`all`	Disable all debugging for BGP.
`dampening`	Disable debugging for BGP dampening.
`events`	Disable debugging for BGP events.
`filters`	Disable debugging for BGP filters.
`fsm`	Disable debugging for BGP Finite State Machine (FSM).
`keepalives`	Disable debugging for BGP keepalives.
`nht`	Disable debugging for BGP NHT (Next Hop Tracking) messages.
`nsm`	Disable debugging for NSM messages.
`updates`	Disable debugging for BGP updates.

Mode Privileged Exec and Global Configuration

Example

```
awplus# undebug bgp events
awplus# undebug bgp nht
awplus# undebug bgp updates
```

Related Commands debug bgp (BGP only)

30 Route Map Commands

Introduction

Overview This chapter provides an alphabetical reference for route map commands. For more information, see the Routemaps Feature Overview and Configuration Guide. These commands can be divided into the following categories:

- route-map command, is used to create a route map and/or route map entry, and to put you into route map mode
- **match** commands, used to determine which routes the route map applies to
- **set** commands, used to modify matching routes

Command List

- "match as-path" on page 1383
- "match community" on page 1384
- "match interface" on page 1386
- "match ip address" on page 1387
- "match ip next-hop" on page 1389
- "match ipv6 address" on page 1390
- "match ipv6 next-hop" on page 1391
- "match metric" on page 1392
- "match origin" on page 1393
- "match route-type" on page 1395
- "match tag" on page 1396
- "route-map" on page 1397
- "set aggregator" on page 1400
- "set as-path" on page 1401
- "set atomic-aggregate" on page 1402
- "set comm-list delete" on page 1403

- "set community" on page 1404
- "set dampening" on page 1406
- "set extcommunity" on page 1408
- "set ip next-hop (route map)" on page 1410
- "set ipv6 next-hop" on page 1411
- "set local-preference" on page 1412
- "set metric" on page 1413
- "set metric-type" on page 1415
- "set origin" on page 1416
- "set originator-id" on page 1417
- "set tag" on page 1418
- "set weight" on page 1419
- "show route-map" on page 1420

match as-path

Overview Use this command to add an autonomous system (AS) path match clause to a route map entry. Specify the AS path attribute value or values to match by specifying the name of an AS path access list.

A BGP update message matches the route map if its attributes include AS path values that match the AS path access list.

Each entry of a route map can only match against one AS path access list in one AS path match clause. If the route map entry already has an AS path match clause, entering this command replaces that match clause with the new clause.

Note that AS path access lists and route map entries both specify an action of deny or permit. The action in the AS path access list determines whether the route map checks update messages for a given AS path value. The route map action and its **set** clauses determine what the route map does with update messages that contain that AS path value.

Use the **no** variant of this command to remove the AS path match clause from a route map entry.

Syntax

```
match as-path <as-path-listname>
no match as-path [<as-path-listname>]
```

Parameter	Description
<as-path-listname>	Specifies an AS path access list name.

Mode Route-map Configuration

Usage This command is valid for BGP update messages only.

Example To add entry `34` to the route map called `myroute`, which will discard update messages if they contain the AS path values that are included in `myaccesslist`, use the commands:

```
awplus# configure terminal
awplus(config)# route-map myroute deny 34
awplus(config-route-map)# match as-path myaccesslist
```

Related Commands

route-map

set as-path

show route-map

match community

Overview Use this command to add a community match clause to a route map entry. Specify the community value or values to match by specifying a community list. To create the community list, enter Global Configuration mode and use the ip community-list command.

A BGP update message matches the route map if its attributes include community values that match the community list.

Each entry of a route map can only match against one community list in one community match clause. If the route map entry already has a community match clause, entering this command replaces that match clause with the new clause.

Note that community lists and route map entries both specify an action of deny or permit. The action in the community list determines whether the route map checks update messages for a given community value. The route map action and its **set** clauses determine what the route map does with update messages that contain that community value.

Use the **no** variant of this command to remove the community match clause from a route map.

Syntax

```
match community
{<community-listname>|<1-99>|<100-199>}[exact-match]
```

```
no match community
[<community-listname>|<1-99>|<100-199>|exact-match]
```

Parameter	Description
<community-listname>	The community list name or number.
<1-99>	Community list number (standard range).
<100-199>	Community list number (expanded range).
exact-match	Exact matching of communities.

Mode Route-map Configuration

Usage This command is valid for BGP update messages only.

Communities are used to group and filter routes. They are designed to provide the ability to apply policies to large numbers of routes by using match and set commands. Community lists are used to identify and filter routes by their common attributes.

Example To add entry `3` to the route map called `myroute`, which will process update messages if they contain the community values that are included in `mylist`, use the commands:

```
awplus# configure terminal
awplus(config)# route-map myroute permit 3
awplus(config-route-map)# match community mylist
```

Related Commands

ip community-list

route-map

set comm-list delete

set community

show route-map

match interface

Overview Use this command to add an interface match clause to a route map entry. Specify the interface name to match.

A route matches the route map if its interface matches the interface name.

Each entry of a route map can only match against one interface in one interface match clause. If the route map entry already has an interface match clause, entering this command replaces that match clause with the new clause.

Use the **no** variant of this command to remove the interface match clause from the route map entry. Use the **no** variant of this command without a specified interface to remove all interfaces.

Syntax

```
match interface <interface>
no match interface [<interface>]
```

Parameter	Description
<interface>	The VLAN to match, e.g. `vlan2`.

Mode Route-map Configuration

Usage This command is valid for RIP and OSPF routes only.

Example To add entry `10` to the route map called `mymap1`, which will process routes if they use the interface `vlan1`, use the commands:

```
awplus# configure terminal
awplus(config)# route-map mymap1 permit 10
awplus(config-route-map)# match interface vlan1
```

To remove all interfaces from the route map called `mymap1`, use the commands:

```
awplus# configure terminal
awplus(config)# route-map mymap1 permit 10
awplus(config-route-map)# no match interface
```

Related Commands

match ip address

match ip next-hop

match route-type

match tag

route-map

show route-map

match ip address

Overview Use this command to add an IP address prefix match clause to a route map entry. You can specify the prefix or prefixes to match by specifying the name of the prefix list. To create the prefix list, enter Global Configuration mode and use the **ip prefix-list** command.

A route matches the route map entry if the route's prefix matches the prefix list.

Each entry of a route map can have at most one one prefix list-based IP address match clause. If the route map entry already has one match clause, entering this command replaces that match clause with the new clause.

Note that prefix lists and route map entries all specify an action of deny or permit. The action in the prefix list determines whether the route map checks update messages and routes for a given prefix. The route map action and its **set** clauses determine what the route map does with routes that contain that prefix.

A route matches the route map entry if the route's prefix matches the prefix list.

Each entry of a route map can have at most one prefix list-based IP address match clause. If the route map entry already has one match clause, entering this command replaces that match clause with the new clause.

Note that prefix lists and route map entries all specify an action of deny or permit. The action in the prefix list determines whether the route map checks update messages and routes for a given prefix. The route map action and its **set** clauses determine what the route map does with routes that contain that prefix.

Use the **no** variant of this command to remove the IP address match clause from a route map entry. To remove a prefix list-based match clause you must also specify the **prefix-list** parameter.

Syntax

```
match ip address prefix-list <prefix-listname>
no match ip address prefix-list <prefix-listname>
```

Parameter	Description
`prefix-list`	Use an IP prefix list to specify which prefixes to match.
`<prefix-listname>`	The prefix list name.

Mode Route-map Configuration

Usage The **match ip address** command specifies the IP address to be matched. The outcome of matching against the IP address is:

- If there is a match for the specified IP address, and **permit** is specified, then the route is redistributed or controlled, as specified by the set action.
- If there is a match for the specified IP address, and **deny** is specified, then the route is not redistributed or controlled.

- If the match criteria are not met, the route is neither accepted nor forwarded, irrespective of **permit** or **deny** specifications.

This command is valid for:

- OSPF routes
- routes in BGP update messages
- RIP routes.

Examples To add entry `3` to the route map called `rmap1`, which will process routes that match the prefix list called `mylist`, use the commands:

```
awplus# configure terminal
awplus(config)# route-map rmap1 permit 3
awplus(config-route-map)# match ip address prefix-list mylist
```

Related Commands route-map

show route-map

match ip next-hop

Overview Use this command to add a next-hop match clause to a route map entry. You can specify the next hop to match by specifying the name of a prefix list. To create the prefix list, enter Global Configuration mode and use the **ip prefix-list** command.

A route matches the route map if the route's next hop matches the prefix list.

Each entry of a route map can have at most one prefix list-based next-hop match clause. If the route map entry already has one match clause, entering this command replaces that match clause with the new clause.

Note that prefix lists and route map entries all specify an action of deny or permit. The action in the access list or prefix list determines whether the route map checks update messages and routes for a given next-hop value. The route map action and its **set** clauses determine what the route map does with update messages and routes that contain that next hop.

Use the **no** variant of this command to remove the next-hop match clause from a route map entry. To remove a prefix list-based match clause you must also specify the prefix-list parameter.

Syntax

```
match ip next-hop prefix-list <prefix-listname>
no match ip next-hop prefix-list [<prefix-listname>]
```

Parameter	Description
`prefix-list`	Use an IP prefix list to specify which next hop to match.
`<prefix-listname>`	The prefix list name.

Mode Route-map Configuration

Usage This command is valid for:

- OSPF routes
- routes in BGP update messages
- RIP routes.

Examples To add entry `3` to the route map called `mymap`, which will process routes whose next hop matches the prefix list called `list1`, use the commands:

```
awplus# configure terminal
awplus(config)# route-map mymap permit 3
awplus(config-route-map)# match ip next-hop prefix-list list1
```

Related Commands route-map

show route-map

match ipv6 address

Overview Use this command to specify the match address of route.

Use the **no** variant of this command to remove the `match ipv6 address` entry.

Syntax

```
match ipv6 address prefix-list <prefix-listname>
no match ipv6 address [prefix-list <prefix-listname>]
```

Parameter	Description
<prefix-listname>	The name of the IPv6 prefix list that specifies criteria for the addresses to be matched. Valid only withBGP and RIPng.

Mode Route-map Configuration

Usage The **match ipv6 address prefix-list** command specifies the entries of prefix-lists to be matched. If there is a match for the specified prefix-list entries, and `permit` is specified, the route is redistributed or controlled as specified by the set action. If the match criteria are met, and `deny` is specified, the route is not redistributed or controlled. If the match criteria are not met, the route is neither accepted nor forwarded, irrespective of `permit` or `deny` specifications.

Examples

```
awplus# configure terminal
awplus(config)# route-map rmap1 permit 3
awplus(config-route-map)# match ipv6 address prefix-list mylist
```

match ipv6 next-hop

Overview Use this command to specify a next-hop address to be matched by the route-map.

Use the **no** variant of this command to disable this function.

Syntax

Parameter	Description
<prefix-listname>	The name of the IPv6 prefix list that specifies criteria for the addresses to be matched.

Mode Route-map Configuration

Usage The **match ipv6 next-hop** command specifies the next-hop address to be matched. If there is a match for the specified next-hop address, and `permit` is specified, the route is redistributed or controlled as specified by the set action. If the match criteria are met, and `deny` is specified, the route is not redistributed or controlled. If the match criteria are not met, the route is neither accepted nor forwarded, irrespective of `permit` or `deny` specifications.

NOTE: *This command is valid only for BGP.*

match metric

Overview Use this command to add a metric match clause to a route map entry. Specify the metric value to match.

A route matches the route map if its metric matches the route map's metric.

A BGP update message matches the route map if its MED attribute value matches the route map's metric.

Each entry of a route map can only match against one metric value in one metric match clause. If the route map entry already has a metric match clause, entering this command replaces that match clause with the new clause.

Use the **no** variant of this command to remove the metric match clause from the route map entry.

Syntax

```
match metric <metric>
no match metric [<metric>]
```

Parameter	Description
<metric>	*<0-4294967295>* Specifies the metric value.

Mode Route-map Configuration

Usage This command is valid for:

- OSPF routes
- routes in BGP update messages
- RIP routes.

Example To stop entry `3` of the route map called `myroute` from processing routes with a metric of `888999`, use the commands:

```
awplus# configure terminal
awplus(config)# route-map myroute permit 3
awplus(config-route-map)# no match metric 888999
```

Related Commands

route-map

set metric

show route-map

match origin

Overview Use this command to add an origin match clause to a route map entry. Specify the origin attribute value to match.

A BGP update message matches the route map if its origin attribute value matches the route map's origin value.

Each entry of a route map can only match against one origin in one origin match clause. If the route map entry already has an origin match clause, entering this command replaces that match clause with the new clause.

Use the **no** variant of this command to remove the origin match clause from the route map entry.

Syntax

```
match origin {egp|igp|incomplete}
no match origin [egp|igp|incomplete]
```

Parameter	Description
`egp`	Learned from an exterior gateway protocol.
`igp`	Learned from a local interior gateway protocol.
`incomplete`	Of unknown heritage, for example a static route.

Mode Route-map Configuration

Usage The origin attribute defines the origin of the path information. The **egp** parameter is indicated as an **e** in the routing table, and it indicates that the origin of the information is learned via Exterior Gateway Protocol. The **igp** parameter is indicated as an **i** in the routing table, and it indicates the origin of the path information is interior to the originating AS. The **incomplete** parameter is indicated as a **?** in the routing table, and indicates that the origin of the path information is unknown or learned through other means. If a static route is redistributed into BGP, the origin of the route is incomplete.

The **match origin** command specifies the origin to be matched. If there is a match for the specified origin, and **permit**is specified, the route is redistributed or controlled as specified by the set action. If the match criteria are met, and `deny` is specified, the route is not redistributed or controlled. If the match criteria are not met, the route is neither accepted nor forwarded, irrespective of **permit** or **deny** specifications.

This command is valid for BGP update messages only.

Example To add entry 34 to the route map called "rmap1", which will drop externally-originated routes, use the commands:

```
awplus# configure terminal
awplus(config)# route-map myroute deny 34
awplus(config-route-map)# match origin egp
```

Related Commands

route-map

set origin

show route-map

match route-type

Overview Use this command to add an external route-type match clause to a route map entry. Specify whether to match OSPF type-1 external routes or OSPF type-2 external routes.

An OSPF route matches the route map if its route type matches the route map's route type.

Each entry of a route map can only match against one route type in one match clause. If the route map entry already has a route type match clause, entering this command replaces that match clause with the new clause.

Use the **no** variant of this command to remove the route type match clause from the route map entry.

Syntax

```
match route-type external {type-1|type-2}
no match route-type external [type-1|type-2]
```

Parameter	Description
`type-1`	OSPF type-1 external routes.
`type-2`	OSPF type-2 external routes.

Mode Route-map Configuration

Usage Use the **match route-type external**command to match specific external route types. AS- external LSA is either Type-1 or Type-2. **external type-1** matches only Type 1 external routes, and **external type-2** matches only Type 2 external routes.

This command is valid for OSPF routes only.

Example To add entry `10` to the route map called `mymap1`, which will process type-1 external routes, use the commands:

```
awplus# configure terminal
awplus(config)# route-map mymap1 permit 10
awplus(config-route-map)# match route-type external type-1
```

Related Commands

match interface

match ip address

match ip next-hop

match tag

route-map

set metric-type

show route-map

match tag

Overview Use this command to add a tag match clause to a route map entry. Specify the route tag value to match.

An OSPF route matches the route map if it has been tagged with the route map's tag value. Routes can be tagged through OSPF commands or through another route map's set clause.

Each entry of a route map can only match against one tag in one match clause. If the route map entry already has a tag match clause, entering this command replaces that match clause with the new clause.

Use the **no** variant of this command to remove the tag match clause from the route map entry.

Syntax

```
match tag <0-4294967295>
no match tag [<0-4294967295>]
```

Mode Route-map Configuration

Usage This command is valid for OSPF routes only.

Example To add entry 10 to the route map called `mymap1`, which will process routes that are tagged `100`, use the following commands:

```
awplus# configure terminal
awplus(config)# route-map mymap1 permit 10
awplus(config-route-map)# match tag 100
```

Related Commands

match interface

match ip address

match ip next-hop

match route-type

route-map

set tag

show route-map

route-map

Overview Use this command to configure a route map entry, and to specify whether the device will process or discard matching routes.

The device uses a name to identify the route map, and a sequence number to identify each entry in the route map.

The **route-map** command puts you into route-map configuration mode. In this mode, you can use the following:

- one or more of the **match** commands to create match clauses. These specify what routes match the entry.
- one or more of the **set** commands to create set clauses. These change the attributes of matching routes.

Use the **no** variant of this command to delete a route map or to delete an entry from a route map.

Syntax

```
route-map <mapname> {deny|permit} <seq>
no route-map <mapname>
no route-map <mapname> {deny|permit} <seq>
```

Parameter	Description
<mapname>	A name to identify the route map.
`deny`	The route map causes a routing process to discard matching routes.
`permit`	The route map causes a routing process to use matching routes.
<seq>	<1-65535> The sequence number of the entry. You can use this parameter to control the order of entries in this route map.

Mode Global Configuration

Usage Route maps allow you to control and modify routing information by filtering routes and setting route attributes. You can apply route maps when the device:

- processes BGP update messages that it has received from a peer
- prepares BGP update messages to send to peers
- redistributes routes from one routing protocol into another
- redistributes static routes into routing protocols
- uses BGP route flap dampening

When a routing protocol passes a route through a route map, it checks the entries in order of their sequence numbers, starting with the lowest numbered entry.

If it finds a match on a route map with an action of permit, then it applies any set clauses and accepts the route. Having found a match, the route is not compared against any further entries of the route map.

If it finds a match on a route map with an action of deny, it will discard the matching route.

If it does not find a match, it discards the route. This means that route maps end with an implicit deny entry. To permit all non-matching routes, end your route map with an entry that has an action of **permit** and no match clause.

Examples

To enter route-map mode for entry 1 of the route map called "route1", and then add a match and set clause to it, use the commands:

```
awplus# configure terminal
awplus(config)# route-map route1 permit 1
awplus(config-route-map)# match as-path 60
awplus(config-route-map)# set weight 70
```

To enter route-map mode for entry 2 of the route map called "route1", and then add a match and set clause to it, use the commands:

```
awplus# configure terminal
awplus(config)# route-map route1 permit 2
awplus(config-route-map)# match interface vlan2
awplus(config-route-map)# set metric 20
```

Note how the prompt changes when you go into route map configuration mode.

To make the device process non-matching routes instead of discarding them, add a command like the following one:

```
awplus(config)# route-map route1 permit 100
```

Related Commands

For BGP:

show route-map

bgp dampening

neighbor default-originate

neighbor route-map

neighbor unsuppress-map

network (BGP and BGP4+)

redistribute (into BGP or BGP4+)

show ip bgp route-map (BGP only)

For OSPF:

default-information originate

redistribute (OSPF)

For RIP:

redistribute (RIP)

set aggregator

Overview Use this command to add an aggregator set clause to a route map entry.

When a BGP update message matches the route map entry, the device sets the update's aggregator attribute. The aggregator attribute specifies the AS and IP address of the device that performed the aggregation.

Use the **no** variant of this command to remove the set clause.

Syntax

```
set aggregator as <asnum> <ip-address>
no set aggregator as
```

Parameter	Description
<asnum>	The AS number of the aggregator.
<ip-address>	The IP address of the aggregator.

Mode Route-map Configuration

Usage An Autonomous System (AS) is a collection of networks under a common administration sharing a common routing strategy. It is subdivided by areas, and is assigned a unique 16- bit number. Use the **set aggregator** command to assign an AS number for the aggregator.

This command is valid for BGP update messages only.

Example To use entry `3` of the route map called `myroute` to set the aggregator attribute to `4310.10.0.3` in matching update messages, use the commands:

```
awplus# configure terminal
awplus(config)# route-map myroute permit 3
awplus(config-route-map)# set aggregator as 43 10.10.0.3
```

To remove all aggregator attributes for entry `3` of the route map called `myroute`, use the commands:

```
awplus# configure terminal
awplus(config)# route-map myroute permit 3
awplus(config-route-map)# no set aggregator as
```

Related Commands route-map

show route-map

set as-path

Overview Use this command to add an AS path set clause to a route map entry.

When a BGP update message matches the route map entry, the device prepends the specified Autonomous System Number (ASN) or ASNs to the update's AS path attribute.

The AS path attribute is a list of the autonomous systems through which the announcement for the prefix has passed. As prefixes pass between autonomous systems, each autonomous system adds its ASN to the beginning of the list. This means that the AS path attribute can be used to make routing decisions.

Use the **no** variant of this command to remove the set clause.

Syntax

```
set as-path prepend <1-65535> [<1-65535>]...
no set as-path prepend [<1-65535> [<1-65535>]...]
```

Parameter	Description
`prepend`	Prepends the autonomous system path.
<1-65535>	The number to prepend to the AS path. If you specify multiple ASNs, separate them with spaces.

Mode Route-map mode

Usage Use the **set as-path** command to specify an autonomous system path. By specifying the length of the AS-Path, the device influences the best path selection by a neighbor. Use the `prepend` parameter with this command to prepend an AS path string to routes increasing the AS path length.

This command is valid for BGP update messages only.

Example To use entry `3` of the route map called `myroute` to prepend ASN `8` and `24` to the AS path of matching update messages, use the commands:

```
awplus# configure terminal
awplus(config)# route-map myroute permit 3
awplus(config-route-map)# set as-path prepend 8 24
```

Related Commands

match as-path

route-map

show route-map

set atomic-aggregate

Overview Use this command to add an atomic aggregate set clause to a route map entry.

When a BGP update message matches the route map entry, the device adds the atomic aggregate attribute to the update.

Use the **no** variant of this command to remove the set clause.

Syntax

```
set atomic-aggregate
no set atomic-aggregate
```

Mode Route-map Configuration

Usage This command is valid for BGP update messages only.

Example To use entry `3` of the route map called `rmap1` to add the atomic aggregator attribute to matching update messages, use the commands:

```
awplus# configure terminal
awplus(config)# route-map rmap1 permit 3
awplus(config-route-map)# set atomic-aggregate
```

Related Commands route-map

show route-map

set comm-list delete

Overview Use this command to delete one or more communities from the community attribute of a BGP update message. Specify the communities to delete by specifying a community list. To create the community list, enter Global Configuration mode and use the ip community-list command.

When a BGP update message matches the route map entry, the device deletes the specified communities from the update's community attribute.

Use the **no** variant of this command to stop deleting the communities.

Syntax

```
set comm-list {<1-199>|<100-199>|<word>} delete
no set comm-list {<1-199>|<100-199>|<word>} delete
```

Parameter	Description
<1-99>	Standard community-list number.
<100-199>	Expanded community-list number.
<word>	Name of the Community-list.

Mode Route-map Configuration

Usage This command is valid for BGP update messages only.

Example To use entry `3` of the route map called `myroute` to delete the communities in community list `34` from matching update messages, use the commands:

```
awplus# configure terminal
awplus(config)# route-map myroute permit 3
awplus(config-route-map)# set comm-list 34 delete
```

Related Commands

ip community-list

match community

route-map

set community

show route-map

set community

Overview Use this command to add a community set clause to a route map entry.

When a BGP update message matches the route map entry, the device takes one of the following actions:

- changes the update's community attribute to the specified value or values, or
- adds the specified community value or values to the update's community attribute, if you specify the **additive** parameter after specifying another parameter. or
- removes the community attribute from the update, if you specify the **none** parameter

Use the **no** variant of this command to remove the set clause.

Syntax

```
set community {[<1-65535>][AA:NN] [internet] [local-AS]
[no-advertise] [no-export] [additive]}
```

```
no set community {[AA:NN] [internet] [local-AS] [no-advertise]
[no-export] [additive]}
```

```
set community none
```

```
no set community none
```

Parameter	Description
<1-65535>	The AS number of the community as an integer not in AA:NN format.
AA:NN	The Autonomous System (AS) number of the community, in AA:NN format. AS numbers are assigned to the regional registries by the IANA (www.iana.org) and can be obtained from the registry in your region. AA and NN are both integers from 1 to 65535. AA is the AS number; NN is a value chosen by the ASN administrator.
`local-AS`	The community of routes that must not be advertised to external BGP peers (this includes peers in other members' Autonomous Systems inside a BGP confederation).
`internet`	The community of routes that can be advertised to all BGP peers.
`no-advertise`	The community of routes that must not be advertised to other BGP peers.
`no-export`	The community of routes that must not be advertised outside a BGP confederation boundary (a standalone Autonomous System that is not part of a confederation should be considered a confederation itself).

Parameter	Description
`none`	The device removes the community attribute from matching update messages.
`additive`	The device adds the specified community value to the update message's community attribute, instead of replacing the existing attribute. By default this parameter is not included, so the device replaces the existing attribute.

Mode Route-map Configuration

Usage This command is valid for BGP update messages only.

Examples To use entry `3` of the route map called `rmap1` to put matching routes into the no-advertise community, use the commands:

```
awplus# configure terminal
awplus(config)# route-map rmap1 permit 3
awplus(config-route-map)# set community no-advertise
```

To use entry `3` of the route map called `rmap1` to put matching routes into several communities, use the commands:

```
awplus# configure terminal
awplus(config)# route-map rmap1 permit 3
awplus(config-route-map)# set community 10:01 23:34 12:14
no-export
```

To use entry `3` of the route map called `rmap1` to put matching routes into a single AS community numbered `16384`, use the commands:

```
awplus# configure terminal
awplus(config)# route-map rmap1 permit 3
awplus(config-route-map)# set community 16384 no-export
```

Related Commands

match community

route-map

set aggregator

set comm-list delete

set extcommunity

show route-map

set dampening

Overview Use this command to add a route flap dampening set clause to a route map entry.

Also use the route map by specifying it in the command bgp dampening route-map.

When a route matches the route map entry, the device enables route flap dampening for that route. If the set clause includes dampening parameter values, the device uses those values when dampening the matching route.

Use the **no** variant of this command to remove the set clause. This disables dampening on matching routes.

Syntax

```
set dampening
set dampening [<reachtime>]
set dampening <reachtime> [<reuse> <suppress> <maxsuppress>] [<unreachtime>]
no set dampening
no set dampening [<reachtime>]
no set dampening <reachtime> [<reuse> <suppress> <maxsuppress>] [<unreachtime>]
```

Parameter	Description
<reachtime>	*<1-45>* The time it takes, in minutes, for the route's instability penalty to halve if the route remains stable. The instability penalty is called the Figure of Merit (FoM). For example, if reachtime is 15, the FoM of a stable route halves over a 15 minute period, quarters over a 30 minute period, and so on. The default is 15 minutes.
<reuse>	*<1-20000>* The value that the instability penalty (FoM) must reach for the device to use a suppressed route again. Once a route is suppressed, it remains suppressed until its FoM falls below this threshold. Reuse must not exceed suppress. The default is 750.
<suppress>	*<1-20000>* The instability penalty (FoM) at which the route is suppressed. Suppress must be greater than or equal to reuse. If suppress is less than 1000, a route is suppressed when it becomes unreachable for the first time. The default is 2000.

Parameter	Description
<maxsuppress>	*<1-255>* A number that is multiplied by reachtime to give the maximum time in minutes for which a suppressed route must remain stable in order to become unsuppressed. The lowest maxsuppress value of 1 gives a maximum suppression time of 1 x reachtime, and the highest maxsuppress value of 255 gives a maximum suppression time of 255 x reachtime. For example, if reachtime is 15 and maxsuppress is 4, the route is unsuppressed after 60 minutes of stability even if its FoM still exceeds reuse. The default is 4.
<unreachtime>	*<1-45>* The time it takes, in minutes, for the route's instability penalty to halve if the route remains unstable. The default is 15 minutes.

Mode Route-map Configuration

Usage The **suppress** value must be greater than or equal to the **reuse** value.

Set the unreachability half-life time to be equal to, or greater than, reachability half-life time. The suppress-limit value must be greater than or equal to the reuse limit value.

This command is valid for BGP routes only.

Example To use entry 24 of the route map called `R1` to enable dampening of matching routes and set the dampening parameters, use the commands:

```
awplus# configure terminal
awplus(config)# route-map R1 permit 24
awplus(config-route-map)# set dampening 20 333 534 30
```

Related Commands bgp dampening

route-map

show route-map

set extcommunity

Overview Use this command to add an extended community set clause to a route map entry. A route map entry can have a route target extended community set clause, a site-of-origin extended community set clause, or both.

When a BGP update message matches the route map entry, the device sets the update's extended community attribute to the specified value or values.

Use the **no** variant of this command to remove the set clause.

Syntax

```
set extcommunity {rt|soo} <extcomm-number>
no set extcommunity {rt|soo} [<extcomm-number>]
```

Parameter	Description
`rt`	Configure a route target extended community. This consists of routers that will receive matching routes.
`soo`	Configure a site-of-origin extended community. This consists of routers that will inject matching routes into BGP.
<extcomm-number>	The extended community number, in the format AA:NN or IPADD:N.

Mode Route-map Configuration

Usage This command is valid for BGP update messages only.

Examples To use entry `3` of the route map called `rmap1` to set the route target extended community attribute to 06:01, use the commands:

```
awplus# configure terminal
awplus(config)# route-map rmap1 permit 3
awplus(config-route-map)# set extcommunity rt 06:01
```

To instead specify the extended community number in dotted decimal notation, use the command:

```
awplus# configure terminal
awplus(config)# route-map rmap1 permit 3
awplus(config-route-map)# set extcommunity rt 0.0.0.6:01
```

To use entry `3` of the route map called `rmap1` to set the site-of-origin extended community attribute to 06:01, use the commands:

```
awplus# configure terminal
awplus(config)# route-map rmap1 permit 3
awplus(config-route-map)# set extcommunity soo 06:01
```

To instead specify the extended community number in dotted decimal notation, use the command:

```
awplus# configure terminal
awplus(config)# route-map rmap1 permit 3
awplus(config-route-map)# set extcommunity soo 0.0.0.6:01
```

Related Commands

match community

route-map

set comm-list delete

set community

show route-map

set ip next-hop (route map)

Overview Use this command to add a next-hop set clause to a route map entry.

When a routeor BGP update message matches the route map entry, the device sets the route's next hop to the specified IP address.

Use the **no** variant of this command to remove the set clause.

Syntax

```
set ip next-hop <ip-address>
no set ip next-hop [<ip-address>]
```

Parameter	Description
<ip-address>	The IP address of the next hop, entered in the form A.B.C.D.

Mode Route-map Configuration

Usage Use this command to set the next-hop IP address to the routes.

This command is valid for:

- OSPF routes
- routes in BGP update messages
- RIP routes.

Example To use entry 3 of the route map called `mymap` to give matching routes a next hop of 10.10.0.67, use the commands:

```
awplus# configure terminal
awplus(config)# route-map mymap permit 3
awplus(config-route-map)# set ip next-hop 10.10.0.67
```

Related Commands

match ip next-hop

route-map

show route-map

set ipv6 next-hop

Overview Use this command to set a next hop-address.

Use the **no** variant of this command to delete an entry.

Syntax

```
set ipv6 next-hop {<ipv6-addr-global>|local <ipv6-addr>}
no set ipv6 next-hop [<ipv6-addr-global>|local [<ipv6-addr>]]
```

Parameter	Description
<ipv6-addr-global>	The IPv6 global address of next hop. The IPv6 address uses the format X:X::X:X.
`local`	Specifies that the address is local.
<ipv6-addr>	The IPv6 local address of next hop. The IPv6 address uses the format X:X::X:X.

Mode Route-map Configuration

Usage Use this command to set the next-hop IPv6 address to the routes.

This command is valid only for BGP.

Examples

```
awplus# configure terminal
awplus(config)# route-map rmap1 permit 3
awplus(config-route-map)# set ipv6 next-hop local
fe80::203:47ff:fe97:66dc
awplus(config-route-map)# no set ipv6 next-hop
```

set local-preference

Overview This command changes the default local preference value.

The local preference indicates the BGP local preference path attribute when there are multiple paths to the same destination. The path with the higher preference is chosen.

Use this command to define the preference of a particular path. The preference is sent to all routers and access servers in the local autonomous system.

The **no** variant of this command reverts to the default setting.

Syntax

```
set local-preference <pref-value>
no set local-preference [<pref-value>]
```

Parameter	Description
<pref-value>	<0-4294967295> Configure local preference value. The default local preference value is 100.

Mode Route-map Configuration

Examples

```
awplus# configure terminal
awplus(config)# route-map rmap1 permit 3
awplus(config-route-map)# set local-preference 2345555
awplus# configure terminal
awplus(config)# router bgp 100
awplus(config-route-map)# no set local-preference
```

Related Commands For related Route Map commands:

route-map

show route-map

For related BGP commands:

bgp default local-preference (BGP only)

neighbor route-map

set metric

Overview Use this command to add a metric set clause to a route map entry.

When a routeor BGP update message matches the route map entry, the device takes one of the following actions:

- changes the metric(or for BGP, the MED attribute value) to the specified value, or
- adds or subtracts the specified value from the metricor MED attribute, if you specify **+**or**-** before the value (for example, to increase the metric by 2, enter +2)

Use the **no** variant of this command to remove the set clause.

Syntax

```
set metric {+<metric-value>|-<metric-value>|<metric-value>}
no set metric [+<metric-value>|-<metric-value> |<metric-value>]
```

Parameter	Description
+	Increase the metricor MED attribute by the specified amount.
–	Decrease the metricor MED attribute by the specified amount.
<metric-value>	<0-4294967295> The new metricor MED attribute value, or the amount by which to increase or decrease the existing value.

Default The default metric value for routes redistributed into OSPF and OSPFv3 is 20.

Mode Route-map Configuration

Usage For BGP, if you want the device to compare MED values in update messages from peers in different ASes, also enter the command bgp always-compare-med. The device always compares MED values in update messages from peers in the same AS.

This command is valid for:

- OSPF routes
- routes in BGP update messages
- RIP routes.

Note that defining the OSPF metric in a route map supersedes the metric defined using a redistribute (OSPF) or a redistribute (IPv6 OSPF) command. For more information, see the OSPFv3 Feature Overview and Configuration Guide and the OSPF Feature Overview and Configuration Guide.

Examples

To use entry 3 of the route map called rmap1 to give matching routes a metric of 600, use the commands:

```
awplus# configure terminal
awplus(config)# route-map rmap1 permit 3
awplus(config-route-map)# set metric 600
```

To use entry 3 of the route map called rmap1 to increase the metric of matching routes by 2, use the commands:

```
awplus# configure terminal
awplus(config)# route-map rmap1 permit 3
awplus(config-route-map)# set metric +2
```

Related Commands

match metric

route-map

show route-map

set metric-type

Overview Use this command to add a metric-type set clause to a route map entry.

When a route matches the route map entry, the device sets its route type to the specified value.

Use the **no** variant of this command to remove the set clause.

Syntax

```
set metric-type {type-1|type-2}
no set metric-type [type-1|type-2]
```

Parameter	Description
`type-1`	Redistribute matching routes into OSPF as type-1 external routes.
`type-2`	Redistribute matching routes into OSPF as type-2 external routes.

Mode Route-map Configuration

Usage This command is valid for OSPF routes only.

Example To use entry `3` of the route map called `rmap1` to redistribute matching routes into OSPF as type-1 external routes, use the commands:

```
awplus# configure terminal
awplus(config)# route-map rmap1 permit 3
awplus(config-route-map)# set metric-type 1
```

Related Commands

default-information originate

redistribute (OSPF)

match route-type

route-map

show route-map

set origin

Overview Use this command to add an origin set clause to a route map entry.

When a BGP update message matches the route map entry, the device sets its origin attribute to the specified value.

Use the **no** variant of this command to remove the set clause.

Syntax

```
set origin {egp|igp|incomplete}
no set origin [egp|igp|incomplete]
```

Parameter	Description
`egp`	Learned from an exterior gateway protocol.
`igp`	Learned from a local interior gateway protocol.
`incomplete`	Of unknown heritage, for example a static route.

Mode Route-map Configuration

Usage This command is valid for BGP update messages only.

Example To use entry `3` of the route map called `rmap1` to give matching update messages an origin of `egp`, use the commands:

```
awplus# configure terminal
awplus(config)# route-map rmap1 permit 3
awplus(config-route-map)# set origin egp
```

Related Commands

match origin

route-map

show route-map

set originator-id

Overview Use this command to add an originator ID set clause to a route map entry.

The originator ID is the router ID of the IBGP peer that first learned this route, either via an EBGP peer or by some other means such as importing it.

When a BGP update message matches the route map entry, the device sets its originator ID attribute to the specified value.

Use the **no** variant of this command to remove the set clause.

Syntax

```
set originator-id <ip-address>
no set originator-id [<ip-address>]
```

Parameter	Description
<ip-address>	The IP address of the originator, entered in the form A.B.C.D.

Mode Route-map Configuration

Usage This command is valid for BGP update messages only.

Example To use entry `3` of the route map called `rmap1` to give matching update messages an originator ID of `1.1.1.1`, use the commands:

```
awplus# configure terminal
awplus(config)# route-map rmap1 permit 3
awplus(config-route-map)# set originator-id 1.1.1.1
```

Related Commands route-map

show route-map

set tag

Overview Use this command to add a tag set clause to a route map entry.

When a route matches the route map entry, the device sets its tag to the specified value when it redistributes the route into OSPF.

Use the **no** variant of this command to remove the set clause.

Syntax

```
set tag <tag-value>
no set tag [<tag-value>]
```

Parameter	Description
<tag-value>	<0-4294967295> Value to tag matching routes with.

Mode Route-map Configuration

Usage This command is valid only when redistributing routes into OSPF.

Example To use entry 3 of the route map called `rmap1` to tag matching routes with the number 6, use the commands:

```
awplus# configure terminal
awplus(config)# route-map rmap1 permit 3
awplus(config-route-map)# set tag 6
```

Related Commands

default-information originate

redistribute (OSPF)

match tag

route-map

show route-map

set weight

Overview Use this command to add a weight set clause to a route map entry.

The weight value assists in best path selection of BGP routes. It is stored with the route in the BGP routing table, but is not advertised to peers. When there are multiple routes with a common destination, the device uses the route with the highest weight value.

When a route matches the route map entry, the device sets its weight to the specified value.

Use the **no** variant of this command to remove the set clause.

Syntax

```
set weight <weight>
no set weight [<weight>]
```

Parameter	Description
<weight>	*<0-4294967295>* The weight value.

Mode Route-map Configuration

Usage This command is valid for BGP routes only.

Example To use entry `3` of the route map called `rmap1` to give matching routes a weight of `60`, use the commands:

```
awplus# configure terminal
awplus(config)# route-map rmap1 permit 3
awplus(config-route-map)# set weight 60
```

Related Commands route-map

show route-map

show route-map

Overview Use this command to display information about one or all route maps.

Syntax

```
show route-map <map-name>
```

Parameter	Description
<map-name>	A name to identify the route map.

Mode User Exec and Privileged Exec

Example To display information about the route-map named `example-map`, use the command:

```
awplus# show route-map example-map
```

Output Figure 30-1: Example output from the **show route-map** command

```
route-map example-map, permit, sequence 1
  Match clauses:
    ip address prefix-list example-pref
  Set clauses:
    metric 100
route-map example-map, permit, sequence 200
  Match clauses:
  Set clauses:
```

Related Commands route-map

31 Policy-based Routing Commands

Introduction

Overview This chapter provides an alphabetical reference of commands used to configure policy-based routing.

For more information, see the Policy-based Routing (PBR) Feature Overview and Configuration Guide.

Command List

- "debug policy-based-routing" on page 1422
- "ip policy-route" on page 1423
- "ipv6 policy-route" on page 1425
- "policy-based-routing" on page 1427
- "policy-based-routing enable" on page 1428
- "show ip pbr route" on page 1429
- "show ipv6 pbr route" on page 1431
- "show pbr rules" on page 1433

debug policy-based-routing

Overview Use this command to enable policy-based routing debugging. This will cause messages containing detailed debugging information to be displayed and logged at the "debugging" level.

Use the **no** variant of this command to disable policy-based routing debugging.

Syntax
```
debug policy-based-routing
no debug policy-based-routing
```

Default Policy-based routing debugging is disabled by default.

Mode Privileged Exec

Examples To enable policy-based routing debugging, use the command:

```
awplus# debug policy-based-routing
```

To disable policy-based routing debugging, use the command:

```
awplus# no debug policy-based-routing
```

Related Commands
ip policy-route

ipv6 policy-route

policy-based-routing

show ip pbr route

show ipv6 pbr route

ip policy-route

Overview Use this command to configure IP policy routes. These routes specify how the device will route traffic from specified applications and entities. You can specify the route's next-hop by specifying the egress interface, or by specifying the next-hop device's IP address (except on dynamic interfaces such as PPPoE). You can also list alternative next-hops to use if your first choice is down.

Use the **no** variant of this command to remove a policy route.

Syntax

```
ip policy-route [<1-128>] [match <application-name>] [from
<source-entity>] [to <destination-entity>] nexthop
{<interface-list>|<ip-add-list>}
```

```
no ip policy-route <1-128>
```

Parameter	Description
<1-128>	The policy route ID number. If you do not specify an ID number, the device assigns the new policy route the next available number, in multiples of 10. For example, if the highest numbered policy route is 81, the next policy route would be given an ID of 90. Policy routes are checked in order of ID number, starting with the lowest ID number. The device applies the policy route as soon as it finds a matching route; it does not check the remaining policy routes.
<application-name>	An application name.
<source-entity>	A source entity name.
<destination-entity>	A destination entity name.
<interface-list>	The name of the egress interface or interfaces. You can list up to 8 interfaces per policy route; the device sends the traffic out the first interface in the list that is up.
<ip-add-list>	The IP address of the next-hop. You can list up to 8 next-hop addresses per policy route; the device sends the traffic to the first address in the list that is reachable. Do not use this when the next-hop is on a dynamic interface (e.g. PPPoE); specify the interface name instead.

Default No policy routes

Mode Policy-based-routing

Usage You must specify at least one of the **match**, **from** or **to** parameters. Packets will be routed to the specified next-hop if they match the application, come from the source entity, and are destined for the destination entity.

Before creating a policy route, you need to create the application and entities that specify the traffic you want to route. To create an application, use the application command. To create entities, use the zone, network (Entity), and host (Entity) commands. To see existing applications and entities, use the show application and show entity commands.

Examples

To create a policy route to route traffic that matches an application called "voice", comes from the entity called "inside", and is destined for the entity called "outside", use the following commands:

```
awplus# configure terminal
awplus(config)# policy-based-routing
awplus(config-pbr)# policy-based-routing enable
awplus(config-pbr)# ip policy-route 10 match voice from inside
to outside nexthop 10.37.236.65
```

To delete the policy route created above, use the following commands:

```
awplus# configure terminal
awplus(config)# policy-based-routing
awplus(config-pbr)# no ip policy-route 10
```

To route the above traffic via ppp0 if ppp0 is up, or ppp1 if ppp0 is down, use the following commands:

```
awplus# configure terminal
awplus(config)# policy-based-routing
awplus(config-pbr)# policy-based-routing enable
awplus(config-pbr)# ip policy-route 20 match voice from inside
to outside nexthop ppp0 ppp1
```

To delete the policy route created above, use the following commands:

```
awplus# configure terminal
awplus(config)# policy-based-routing
awplus(config-pbr)# no ip policy-route 20
```

Related Commands

policy-based-routing

policy-based-routing enable

show application

show entity

show ip pbr route

ipv6 policy-route

Overview Use this command to configure IPv6 policy routes. These routes specify how the device will route traffic from specified applications and entities. You can specify the route's next-hop by specifying the egress interface, or by specifying the next-hop device's IPv6 address (except on dynamic interfaces such as PPPoE). You can also list alternative next-hops to use if your first choice is down.

Use the **no** variant of this command to remove a policy route.

Syntax

```
ipv6 policy-route [<1-128>] [match <application-name>] [from
<source-entity>] [to <destination-entity>] nexthop
{<interface-list>|<ipv6-add-list>}
```

```
no ipv6 policy-route <1-128>
```

Parameter	Description
<1-128>	The policy route ID number. If you do not specify an ID number, the device assigns the new policy route the next available number, in multiples of 10. For example, if the highest numbered policy route is 81, the next policy route would be given an ID of 90. Policy routes are checked in order of ID number, starting with the lowest ID number. The device applies the policy route as soon as it finds a matching route; it does not check the remaining policy routes.
<application-name>	An application name.
<source-entity>	A source entity name.
<destination-entity>	A destination entity name.
<interface-list>	The name of the egress interface or interfaces. You can list up to 8 interfaces per policy route; the device sends the traffic out the first interface in the list that is up.
<ipv6-add-list>	The IPv6 address of the next-hop, specified in the form X:X::X:X. You can list up to 8 next-hop addresses per policy route; the device sends the traffic to the first address in the list that is reachable. Do not use this when the next-hop is on a dynamic interface (e.g. PPPoE); specify the interface name instead.

Default No policy routes

Mode Policy-based-routing

Usage You must specify at least one of the **match**, **from** or **to** parameters. Packets will be routed to the specified next-hop if they match the application, come from the source entity, and are destined for the destination entity.

Before creating a policy route, you need to create the application and entities that specify the traffic you want to route. To create an application, use the application command. To create entities, use the zone, network (Entity), and host (Entity) commands. To see existing applications and entities, use the show application and show entity commands.

Examples

To create a policy route to route traffic that matches an application called "voice", comes from the entity called "inside", and is destined for the entity called "outside", use the following commands:

```
awplus# configure terminal
awplus(config)# policy-based-routing
awplus(config-pbr)# policy-based-routing enable
awplus(config-pbr)# ipv6 policy-route 10 match voice from
inside to outside nexthop 2001:100::1
```

To delete the policy route created above, use the following commands:

```
awplus# configure terminal
awplus(config)# policy-based-routing
awplus(config-pbr)# no ipv6 policy-route 10
```

To route the above traffic via ppp0 if ppp0 is up, or ppp1 if ppp0 is down, use the following commands:

```
awplus# configure terminal
awplus(config)# policy-based-routing
awplus(config-pbr)# policy-based-routing enable
awplus(config-pbr)# ipv6 policy-route 20 match voice from
inside to outside nexthop ppp0 ppp1
```

To delete the policy route created above, use the following commands:

```
awplus# configure terminal
awplus(config)# policy-based-routing
awplus(config-pbr)# no ipv6 policy-route 20
```

Related Commands

policy-based-routing

policy-based-routing enable

show application

show entity

show ipv6 pbr route

policy-based-routing

Overview Use this command to enter Policy-based-routing mode. Policy-based routing lets you determine how the device will route traffic from specified applications and entities.

Use the **no** variant of this command to remove the whole policy-based routing configuration.

Syntax

```
policy-based-routing
no policy-based-routing
```

Mode Global configuration

Usage Once you have entered policy-based-routing mode, use the policy-based-routing enable command to turn on policy-based routing, and the ip policy-route or ipv6 policy-route commands to create policy routes.

Example To enter policy-based-routing mode, use the commands:

```
awplus# configure terminal
awplus(config)# policy-based-routing
awplus(config-pbr)#
```

Related Commands

ip policy-route

ipv6 policy-route

policy-based-routing enable

policy-based-routing enable

Overview Use this command to enable policy-based routing (PBR). Policy-based routing lets you determine how the device will route traffic from specified applications and entities.

Use the **no** variant of this command to disable policy-based routing.

Syntax

```
policy-based-routing enable
no policy-based-routing enable
```

Default Policy-based routing is disabled by default

Mode Policy-based-routing

Examples To enable policy-based routing use the following commands.

```
awplus# configure terminal
awplus(config)# policy-based-routing
awplus(config-pbr)# policy-based-routing enable
```

To disable policy-based routing use the following commands.

```
awplus# configure terminal
awplus(config)# policy-based-routing
awplus(config-pbr)# no policy-based-routing enable
```

Related Commands ip policy-route

ipv6 policy-route

show ip pbr route

Overview Use this command to display the installed IPv4 routes for policy-based routing.

Syntax

```
show ip pbr route [<1-128>]
```

Parameter	Description
<1-128>	The policy route ID. If you specify a policy route ID, the output only lists routes for that ID. If you do not specify an ID, the output also lists the conventional static and dynamic routes, in the table called "main".

Mode User Exec/Privileged Exec

Usage If you do not specify a policy routeID, the output starts by listing the ordinary static and dynamic routes, in a table called "main".

Example To show all the IPv4 routes, use the following command:

```
awplus# show ip pbr route
```

Output Figure 31-1: Example output from **show ip pbr route**

```
awplus#show ip pbr route
Route table: main
    10.33.11.0/24 via 10.37.236.65, eth1
    10.37.236.64/27 is directly connected, eth1
    172.31.0.0/17 is directly connected, vlan4092
    192.168.1.0/24 is directly connected, vlan2

Route table: policy-route 10

Route table: policy-route 20
    default via 10.37.236.65, ppp0
```

If you do not specify a policy routeID, the output starts by listing the ordinary static and dynamic routes, in the route table called "main".

Then it lists the routes for each policy route.

For each route, the output lists the route's next-hop IP address and/or the next-hop interface.

Example To show only the routes for policy route 20, use the following command:

```
awplus# show ip pbr route 20
```

Output Figure 31-2: Example output from **show ip pbr route** for a specified policy route

```
awplus#show ip pbr route 20

Route table: policy-route 20
    default via 10.37.236.65, ppp0
```

For each route, the output lists the route's next-hop IP address and/or the next-hop interface.

Related Commands

ip policy-route

policy-based-routing

show ipv6 pbr route

Overview Use this command to display the installed IPv6 routes for policy-based routing.

Syntax

```
show ipv6 pbr route [<1-128>]
```

Parameter	Description
<1-128>	The policy route ID. If you specify a policy route ID, the output only lists routes for that ID. If you do not specify an ID, the output also lists the ordinary static and dynamic routes, in the table called "main".

Mode User Exec/Privileged Exec

Usage If you do not specify a policy routeID, the output starts by listing the ordinary static and dynamic routes, in a table called "main".

Example To show all the IPv6 routes, use the following command:

```
awplus# show ipv6 pbr route
```

Output Figure 31-3: Example output from **show ipv6 pbr route**

```
awplus#show ipv6 pbr route
Route table: main
    2001:100::/64 dev eth1
    fe80::/64 dev eth1

Route table: policy-route 10

Route table: policy-route 20
    default via 2001:100::2, eth1
```

If you do not specify a policy routeID, the output starts by listing the ordinary static and dynamic routes, in the route table called "main".

Then it lists the routes for each policy route.

For each route, the output lists the route's next-hop IPv6 address and/or the next-hop interface.

Example To show only the routes for policy-route 20, use the following command:

```
awplus# show ip pbr route 20
```

Output Figure 31-4: Example output from **show ipv6 pbr route** for a specified policy route

```
awplus#show ipv6 pbr route 20

Route table: policy-route 20
    default via 2001:100::2, eth1
```

For each route, the output lists the route's next-hop IPv6 address and/or the next-hop interface.

Related Commands

ipv6 policy-route

policy-based-routing

show pbr rules

Overview Use this command to display the configured IPv4 and IPv6 policy routes. It also shows the validity of the policy routes.

Syntax

```
show pbr rules
```

Mode User Exec/Privileged Exec

Example To show information about the policy routes, use the command:

```
awplus# show pbr rules
```

Output Figure 31-5: Example output from **show pbr rules**

```
awplus#show pbr rules
Policy based routing is enabled
Rule Match    From            To                Valid  Nexthop
-----------------------------------------------------------------------
10   any      entities.any    entities.outside  Yes    10.10.20.2
20   udp      any             any               Yes    2001:100::2
```

Table 31-1: Parameters in the output from **show pbr rules**

Parameter	Description
Rule	The policy route ID number. Policy routes are checked in order of ID number, starting with the lowest ID number. The device applies the policy route as soon as it finds a matching route; it does not check the remaining policy routes.
Match	The name of an application. Packets will be routed to the specified next hop if they match this application, come from the source entity, and are destined for the destination entity.
From	The name of the source entity. Packets will be routed to the specified next hop if they match the application, come from this source entity, and are destined for the destination entity.
To	The name of the destination entity. Packets will be routed to the specified next hop if they match the application, come from the source entity, and are destined for this destination entity.

Table 31-1: Parameters in the output from **show pbr rules** (cont.)

Parameter	Description
`Valid`	Whether the application and entities are valid.
`Nexthop`	The IPv4 or IPv6 address of the next-hop, or the egress interface. You can list up to 8 next-hop addresses or up to 8 interface names per policy route; the device sends the traffic to the first address in the list that is reachable or the first interface that is up and running.

Related Commands

ip policy-route

ipv6 policy-route

policy-based-routing

show ip pbr route

show ipv6 pbr route

32 VRF-lite Commands

Introduction

Overview This chapter provides an alphabetical reference of commands used to configure Virtual Routing and Forwarding Lite (VRF-lite). See the VRF Lite Feature Overview and Configuration Guide for more information and examples.

Command List

- "address-family" on page 1438
- "address-family ipv4 (RIP)" on page 1440
- "arp (IP address MAC)" on page 1441
- "arp opportunistic-nd" on page 1443
- "clear arp-cache" on page 1445
- "clear ip bgp * (BGP only)" on page 1447
- "clear ip bgp (IPv4) (BGP only)" on page 1449
- "clear ip rip route" on page 1450
- "crypto key pubkey-chain knownhosts" on page 1452
- "default-metric (RIP)" on page 1454
- "description (VRF)" on page 1455
- "distance (RIP)" on page 1456
- "distribute-list (RIP)" on page 1457
- "export map" on page 1458
- "fullupdate (RIP)" on page 1459
- "import map" on page 1460
- "ip route static inter-vrf" on page 1461
- "ip route" on page 1462
- "ip vrf" on page 1465

- "ip vrf forwarding" on page 1466
- "max-fib-routes (VRF)" on page 1467
- "max-static-routes (VRF)" on page 1469
- "neighbor next-hop-self" on page 1470
- "neighbor remote-as" on page 1473
- "neighbor password" on page 1476
- "network (RIP)" on page 1480
- "passive-interface (RIP)" on page 1482
- "ping" on page 1483
- "rd (route distinguisher)" on page 1485
- "redistribute (into BGP or BGP4+)" on page 1486
- "redistribute (OSPF)" on page 1488
- "redistribute (RIP)" on page 1490
- "route (RIP)" on page 1492
- "route-target" on page 1493
- "router ospf" on page 1495
- "router-id (VRF)" on page 1497
- "show arp" on page 1498
- "show crypto key pubkey-chain knownhosts" on page 1501
- "show ip bgp cidr-only (BGP only)" on page 1503
- "show ip bgp community (BGP only)" on page 1504
- "show ip bgp community-list (BGP only)" on page 1506
- "show ip bgp dampening (BGP only)" on page 1507
- "show ip bgp filter-list (BGP only)" on page 1509
- "show ip bgp inconsistent-as (BGP only)" on page 1510
- "show ip bgp longer-prefixes (BGP only)" on page 1511
- "show ip bgp prefix-list (BGP only)" on page 1512
- "show ip bgp quote-regexp (BGP only)" on page 1513
- "show ip bgp regexp (BGP only)" on page 1515
- "show ip bgp route-map (BGP only)" on page 1517
- "show ip bgp summary (BGP only)" on page 1518
- "show ip interface vrf" on page 1520
- "show ip rip vrf database" on page 1522
- "show ip rip vrf interface" on page 1523
- "show ip route" on page 1524

- "show ip route database" on page 1527
- "show ip route summary" on page 1530
- "show ip vrf" on page 1532
- "show ip vrf detail" on page 1533
- "show ip vrf interface" on page 1534
- "show running-config vrf" on page 1535
- "ssh" on page 1536
- "tcpdump" on page 1538
- "telnet" on page 1539
- "timers (RIP)" on page 1540
- "traceroute" on page 1542
- "version (RIP)" on page 1543

address-family

Overview This command enters the IPv4 or IPv6 Address-Family Configuration command mode. In this mode you can configure address-family specific parameters.

When using VRF-lite, you can enter IPv4 Address Family Configuration mode for a specified VRF instance before configuring that instance.

Syntax [BGP]

```
address-family ipv4 [unicast]
no address-family ipv4 [unicast]
```

Syntax (VRF-lite)

```
address-family ipv4 [unicast|vrf <vrf-name>]
no address-family ipv4 [unicast|vrf <vrf-name>]
```

Syntax [BGP4+]

```
address-family ipv6 [unicast]
no address-family ipv6 [unicast]
```

Parameter	Description
ipv4	Configure parameters relating to the exchange of IPv4 prefixes.
ipv6	Configure parameters relating to the exchange of IPv6 prefixes.
unicast	Configure parameters relating to the exchange of routes to unicast destinations.
vrf	Applies the command to the specified VRF instance.
<vrf-name>	The name of the VRF instance to enter IPv4 Address-Family mode for.

Mode [BGP] Router Configuration

Mode [BGP4+] Router Configuration

Usage To leave the IPv4 or IPv6 Address Family Configuration mode, and return to the Router Configuration mode, use the exit-address-family command.

Example [BGP]

```
awplus# configure terminal
awplus(config)# router bgp 100
awplus(config-router)# neighbor 192.168.0.1 remote-as 100
awplus(config-router)# address-family ipv4 vrf green
awplus(config-router-af)# neighbor 192.168.0.1 activate
awplus(config-router-af)# exit-address-family
awplus(config-router)#
```

Example [BGP4+]

```
awplus# configure terminal
awplus(config)# router bgp 100
awplus(config-router)# neighbor 2001:0db8:010d::1 remote-as 100
awplus(config-router)# address-family ipv6
awplus(config-router-af)# neighbor 2001:0db8:010d::1 activate
awplus(config-router-af)# exit-address-family
awplus(config-router)#
```

Related Commands exit-address-family

Command changes Version 5.4.6-2.1: VRF-lite support added.

address-family ipv4 (RIP)

Overview This command enters the IPv4 address-family command mode. In this mode you can configure address-family specific parameters for a specific VRF (RIP) instance.

Syntax

```
address-family ipv4 vrf <vrf-name>
no address-family ipv4 vrf <vrf-name>
```

Parameter	Description
`ipv4`	Configure parameters relating to the RIP exchange of IPv4 prefixes.
`vrf`	Apply this command to a VRF instance.
`<vrf-name>`	The name of the VRF instance.

Mode Router Configuration

Usage To leave Address Family mode and return to Router Configuration mode, use the exit-address-family command.

Example In this example the address family "green" is entered, and then exited by using the exit-address-family command.

```
awplus# configure terminal
awplus(config)# router rip
awplus(config-router)# address-family ipv4 vrf green
awplus(config-router-af)# exit-address-family
awplus(config-router)#
```

Related Commands exit-address-family

Command changes Version 5.4.6-2.1: VRF-lite support added.

arp (IP address MAC)

Overview This command adds a static ARP entry to the ARP cache. This is typically used to add entries for hosts that do not support ARP or to speed up the address resolution function for a host. The ARP entry must not already exist. Use the **alias** parameter to allow your device to respond to ARP requests for this IP address.

If VRF-lite is configured, you can add ARP entries to either the global cache or for a specific VRF instance.

The **no** variant of this command removes the static ARP entry. Use the clear arp-cache command to remove the dynamic ARP entries in the ARP cache.

Syntax

```
arp <ip-addr> <mac-address> [<port-number>] [alias]
no arp <ip-addr>
```

Syntax (VRF-lite)

```
arp [vrf <vrf-name>] <ip-addr> <mac-address> [<port-number>]
[alias]
no arp [vrf <vrf-name>] <ip-addr>
```

Parameter	Description
<ip-addr>	The IPv4 address of the device you are adding as a static ARP entry.
<mac-address>	The MAC address of the device you are adding as a static ARP entry, in hexadecimal notation with the format HHHH.HHHH.HHHH.
<port-number>	The port number associated with the IP address. Specify this when the IP address is part of a VLAN.
alias	Allows your device to respond to ARP requests for the IP address. Proxy ARP must be enabled on the interface before using this parameter.
vrf	Apply this command to a VRF instance.
<vrf-name>	The name of the VRF instance.

Mode Global Configuration

Examples To add the IP address 10.10.10.9 with the MAC address 0010.2533.4655 into the ARP cache, and have your device respond to ARP requests for this address, use the commands:

```
awplus# configure terminal
awplus(config)# arp 10.10.10.9 0010.2355.4566 alias
```

Example (VRF-lite)

To apply the above example within a VRF instance called `red` use the following commands:

```
awplus# configure terminal
awplus(config)# arp vrf red 10.10.10.9 0010.2355.4566 alias
```

Related Commands

clear arp-cache

ip proxy-arp

show arp

Command changes

Version 5.4.6-2.1: VRF-lite support added.

arp opportunistic-nd

Overview Use this command to enable opportunistic neighbor discovery for the global ARP cache. This command changes the behavior for unsolicited ARP packet forwarding on the device.

When using VRF-lite, you can use this command to enable opportunistic neighbor discovery for a named VRF instance.

Use the **no** variant of this command to disable opportunistic neighbor discovery for the global ARP cache.

Syntax

```
arp opportunistic-nd
no arp opportunistic-nd
```

Syntax (VRF-lite)

```
arp opportunistic-nd [vrf <vrf-name>]
no arp opportunistic-nd [vrf <vrf-name>]
```

Parameter	Description
`vrf`	Apply this command to a VRF instance.
`<vrf-name>`	The name of the VRF instance.

Default Opportunistic neighbor discovery is disabled by default.

Mode Global Configuration

Usage When opportunistic neighbor discovery is enabled, the device will reply to any received unsolicited ARP packets (but not gratuitous ARP packets). The source MAC address for the unsolicited ARP packet is added to the ARP cache, so the device forwards the ARP packet. When opportunistic neighbor discovery is disabled, the source MAC address for the ARP packet is not added to the ARP cache, so the ARP packet is not forwarded by the device.

Note this command enables or disables opportunistic neighbor discovery for a VRF instance if the **vrf** parameter and an instance name are applied. If a VRF instance is not specified, then opportunistic neighbor discovery is enabled or disabled for device ports configured for IPv4.

Examples To enable opportunistic neighbor discovery for the global ARP cache, enter:

```
awplus# configure terminal
awplus(config)# arp opportunistic-nd
```

To disable opportunistic neighbor discovery for the global ARP cache, enter:

```
awplus# configure terminal
awplus(config)# no arp opportunistic-nd
```

Example (VRF-lite)

To enable opportunistic neighbor discovery for the VRF instance 'blue', enter:

```
awplus# configure terminal
awplus(config)# arp opportunistic-nd vrf blue
```

To disable opportunistic neighbor discovery for the VRF instance 'blue', enter:

```
awplus# configure terminal
awplus(config)# no arp opportunistic-nd vrf blue
```

Related Commands

ipv6 opportunistic-nd

show arp

show running-config interface

Command changes

Version 5.4.6-2.1: VRF-lite support added.

clear arp-cache

Overview This command deletes dynamic ARP entries from the ARP cache. You can optionally specify the IPv4 address of an ARP entry to be cleared from the ARP cache.

When running VRF-lite, this command deletes dynamic ARP entries either from the ARP cache of a specific VRF instance, or from the ARP cache of the Global VRF instance. To delete all ARP entries from both the Global VRF instance and all VRF instances, use the command with no parameters. You can optionally specify the IPv4 address for the VRF instance to clear an ARP entry from the ARP cache.

Syntax
```
clear arp-cache [<ip-address>]
```

Syntax (VRF-lite)
```
clear arp-cache [vrf <vrf-name>|global] [<ip-address>]
```

Parameter	Description
<ip-address>	Specifies a specific IPv4 address for a VRF instance whose entries are to be cleared from the ARP cache.
`global`	When VRF-lite is configured, apply this command to the global routing and forwarding table.
`vrf`	Apply this command to the specified VRF instance.
<vrf-name>	The VRF instance name

Mode Privileged Exec

Usage To display the entries in the ARP cache, use the show arp command. To remove static ARP entries, use the no variant of the arp (IP address MAC) command.

Example To clear all dynamic ARP entries, use the command:

```
awplus# clear arp-cache
```

To clear all dynamic ARP entries associated with the IPv4 address 192.168.1.1, use the command:

```
awplus# clear arp-cache 192.168.1.1
```

Example (VRF-lite) To clear the dynamic ARP entries from the VRF instance named blue, use the commands:

```
awplus# clear arp-cache vrf blue
```

To clear the dynamic ARP entries from the VRF instance named blue with the IPv4 address 192.168.1.1, use the commands:

```
awplus# clear arp-cache vrf blue 192.168.1.1
```

When running VRF-lite, to clear the dynamic ARP entries from the global VRF-lite and all VRF instances, use the command:

```
awplus# clear arp-cache
```

Related Commands

arp (IP address MAC)

show arp

clear ip bgp * (BGP only)

Overview Use this command to reset all BGP connections, either by fully resetting sessions or by performing soft resets.

If VRF-lite is configured, you can reset BGP connections for all VRF instances or for a specified VRF instance.

Syntax

```
clear ip bgp *
clear ip bgp * in
clear ip bgp * out
clear ip bgp * soft [in|out]
clear ip bgp * in [prefix-filter]
```

Syntax (VRF-lite)

```
clear ip bgp * [vrf <vrf-name>]
clear ip bgp * [vrf <vrf-name>] in
clear ip bgp * [vrf <vrf-name>] out
clear ip bgp * [vrf <vrf-name>] soft [in|out]
clear ip bgp * in [prefix-filter]
```

Parameter	Description
`*`	Clears all BGP peers.
`in`	Indicates that incoming advertised routes will be cleared.
`prefix-filter`	Specifies that a prefix-list will be sent, by the ORF mechanism, to those neighbors with which the ORF capability has been negotiated. The neighbors will be triggered to resend updates, which match the prefix-list filter, to the local router. The local router will then perform a soft reconfiguration.
`out`	Indicates that outgoing advertised routes will be cleared.
`soft in`	Soft inbound reset causes the neighbors to resend all their updates to the local device, without resetting the connection or clearing the entries in the local device. So, the local device stores new updates, and uses them to systematically replace existing table entries. This process can use a considerable amount of memory.
`soft out`	Soft outbound reset causes the device to simply resend all its updates to the specified neighbor(s), without resetting the connection, or clearing table entries.
`vrf`	Applies the command to the specified VRF instance.
`<vrf-name>`	The name of the VRF instance.

Mode Privileged Exec

Examples

To clear all BGP peers, use the command:

```
awplus# clear ip bgp *
```

Example (VRF-lite)

To clear all BGP peers in VRF instance red, use the command:

```
awplus# clear ip bgp * vrf red
```

To clear all outbound BGP peers in VRF instance red, use the command:

```
awplus# clear ip bgp * out vrf red
```

Command changes

Version 5.4.6-2.1: VRF-lite support added.

clear ip bgp (IPv4) (BGP only)

Overview Use this command to reset the IPv4 BGP connection to the peer specified by the IP address. When VRF-lite is configured, you can apply this command to a specific VRF instance.

Syntax [BGP]

```
clear ip bgp <ipv4-addr> [in [prefix-filter]|out|soft [in|out]]
```

Syntax (VRF-lite)

```
clear ip bgp <ipv4-address> [vrf <vrf-name>] [in|out|soft
[in|out]]
```

Parameter	Description
<ipv4-addr>	Specifies the IPv4 address of the neighbor whose connection is to be reset, entered in the form A.B.C.D.
`in`	Indicates that incoming advertised routes will be cleared.
`prefix-filter`	Specifies that a prefix-list will be sent, by the ORF mechanism, to those neighbors with which the ORF capability has been negotiated. The neighbors will be triggered to resend updates, which match the prefix-list filter, to the local router. The local router will then perform a soft reconfiguration.
`out`	Indicates that outgoing advertised routes will be cleared.
`soft in`	Soft inbound reset causes the neighbors to resend all their updates to the local switch, without resetting the connection or clearing the entries in the local switch. So, the local switch stores new updates, and uses them to systematically replace existing table entries. This process can use a considerable amount of memory.
`soft out`	Soft outbound reset causes the switch to simply resend all its updates to the specified neighbor(s), without resetting the connection, or clearing table entries.
`vrf`	Applies the command to the specified VRF instance.
<vrf-name>	The name of the VRF instance.

Mode [BGP] Privileged Exec

Examples [BGP] To clear the BGP connection to peer at IPv4 address 192.168.1.1 and clear all incoming routes, use the following command:

```
awplus# clear ip bgp 192.168.1.1 in
```

To apply the above example to clear the BGP connection to the peer at IP address 192.0.2.11 for the VRF instance blue, use the following commands:

```
awplus# clear ip bgp 192.0.2.11 vrf blue in
```

Command changes Version 5.4.6-2.1: VRF-lite support added.

clear ip rip route

Overview Use this command to clear specific data from the RIP routing table.

Syntax
```
clear ip rip route {<ip-dest-network/prefix-length>|
static|connected|rip|ospf|bgp|invalid-routes|all}
```

Syntax (VRF-lite)
```
clear ip rip [vrf <vrf-name>] route
{<ip-dest-network/prefix-length>
|static|connected|rip|ospf|bgp|invalid-routes|all}
```

Parameter	Description
`vrf`	Apply this command to a VRF instance.
<vrf-name>	The name of the VRF instance.
<ip-dest-network/prefix-length>	Removes entries which exactly match this destination address from RIP routing table. Enter the IP address and prefix length of the destination network.
`static`	Removes static entries from the RIP routing table.
`connected`	Removes entries for connected routes from the RIP routing table.
`rip`	Removes only RIP routes from the RIP routing table.
`ospf`	Removes only OSPF routes from the RIP routing table.
`bgp`	Removes only BGP routes from the RIP routing table.
`invalid-routes`	Removes routes with metric 16 immediately. Otherwise, these routes are not removed until RIP times out the route after 2 minutes.
`all`	Clears the entire RIP routing table.

Mode Privileged Exec

Usage Using this command with the **all** parameter clears the RIP table of all the routes.

Examples To clear the route 10.0.0.0/8 from the RIP routing table, use the following command:

```
awplus# clear ip rip route 10.0.0.0/8
```

Examples (VRF-lite) To clear RIP routes associated with the VRF instance ‘red’ for OSPF routes, use the following command:

```
awplus# clear ip rip vrf red route ospf
```

To clear the route 10.0.0.0/8 from the RIP routing table for the VRF instance ‘red’, use the following command:

```
awplus# clear ip rip vrf red route 10.0.0.0/8
```

Command changes Version 5.4.6-2.1: VRF-lite support added.

crypto key pubkey-chain knownhosts

Overview This command adds a public key of the specified SSH server to the known host database on your device. The SSH client on your device uses this public key to verify the remote SSH server.

The key is retrieved from the server. Before adding a key to this database, check that the key sent to you is correct.

If the server's key changes, or if your SSH client does not have the public key of the remote SSH server, then your SSH client will inform you that the public key of the server is unknown or altered.

The **no** variant of this command deletes the public key of the specified SSH server from the known host database on your device.

Syntax
```
crypto key pubkey-chain knownhosts [ip|ipv6] <hostname> [rsa|dsa|rsa1]
no crypto key pubkey-chain knownhosts <1-65535>
```

Syntax (VRF-lite)
```
crypto key pubkey-chain knownhosts [vrf <vrf-name>] [ip|ipv6] <hostname> [rsa|dsa|rsa1]
no crypto key pubkey-chain knownhosts [vrf <vrf-name>] <1-65535>
```

Parameter	Description
`vrf`	Apply this command to the specified VRF instance.
<vrf-name>	The VRF instance name
`ip`	Keyword used prior to specifying an IPv4 address
`ipv6`	Keyword used prior to specifying an IPv6 address
<hostname>	IPv4/IPv6 address or hostname of a remote server in the format `a.b.c.d` for an IPv4 address, or in the format `x:x::x:x` for an IPv6 address.
`rsa`	Specify the RSA public key of the server to be added to the known host database.
`dsa`	Specify the DSA public key of the server to be added to the known host database.
`rsa1`	Specify the SSHv1 public key of the server to be added to the know host database.
<1-65535>	Specify a key identifier when removing a key using the **no** parameter.

Default If no cryptography algorithm is specified, then **rsa** is used as the default cryptography algorithm.

Mode Privilege Exec

Usage

This command adds a public key of the specified SSH server to the known host database on the device. The key is retrieved from the server. The remote SSH server is verified by using this public key. The user is requested to check the key is correct before adding it to the database.

If the remote server's host key is changed, or if the device does not have the public key of the remote server, then SSH clients will inform the user that the public key of the server is altered or unknown.

Examples

To add the RSA host key of the remote SSH host IPv4 address `192.0.2.11` to the known host database, use the command:

```
awplus# crypto key pubkey-chain knownhosts 192.0.2.11
```

To delete the second entry in the known host database, use the command:

```
awplus# no crypto key pubkey-chain knownhosts 2
```

Examples (VRF-lite)

To add the RSA host key of the remote SSH host IPv4 address `192.0.2.11` in VRF `red` to the known host database, use the command:

```
awplus# crypto key pubkey-chain knownhosts vrf red 192.0.2.11
```

To delete the second entry in the known host database in VRF `red`, use the command:

```
awplus# no crypto key pubkey-chain knownhosts vrf red 2
```

Validation Commands

show crypto key pubkey-chain knownhosts

Command changes

Version 5.4.6-2.1: VRF-lite support added.

default-metric (RIP)

Overview Use this command to specify the metrics to be assigned to redistributed RIP routes.

Use the **no** variant of this command to reset the RIP metric back to its default (1).

Syntax

```
default-metric <metric>
no default-metric [<metric>]
```

Parameter	Description
<metric>	<1-16> Specifies the value of the default metric.

Default By default, the RIP metric value is set to 1.

Mode RIP Router Configuration or RIP Router Address Family Configuration for a VRF instance.

Usage This command is used with the redistribute (RIP) command to make the routing protocol use the specified metric value for all redistributed routes, regardless of the original protocol that the route has been redistributed from.

Examples This example assigns the cost of 10 to the routes that are redistributed into RIP.

```
awplus# configure terminal
awplus(config)# router rip
awplus(config-router)# default-metric 10
awplus(config-router)# redistribute ospf
awplus(config-router)# redistribute connected
```

Example (VRF-lite) This example assigns the cost of 10 to the routes which are redistributed into RIP for the VRF instance blue.

```
awplus# configure terminal
awplus(config)# router rip
awplus(config-router)# address family ipv4 vrf blue
awplus(config-router-af)# default-metric 10
awplus(config-router-af)# redistribute ospf
awplus(config-router-af)# redistribute connected
```

Related Commands redistribute (RIP)

Command changes Version 5.4.6-2.1: VRF-lite support added.

description (VRF)

Overview Use this command to add text that describes a specific VRF instance. Descriptions can be up to 80 characters long.

The **no** variant of this command removes the description of the selected VRF instance.

Syntax

```
description <descriptive-text>
no description
```

Parameter	Description
<descriptive-text>	A string of up to 80 characters that describes the VRF instance.

Mode VRF Configuration

Example To add the description for a VRF instance named blue, use the following commands:

```
awplus# config terminal
awplus(config)# ip vrf blue
awplus(config-vrf)# description the text description of vrf blue
```

Related Commands show ip vrf

Command changes Version 5.4.6-2.1: VRF-lite support added.

distance (RIP)

Overview This command sets the administrative distance for RIP routes. Your device uses this value to select between two or more routes to the same destination obtained from two different routing protocols. The route with the smallest administrative distance value is added to the Forwarding Information Base (FIB). For more information, see the Route Selection Feature Overview and Configuration Guide.

The **no** variant of this command sets the administrative distance for the RIP route to the default of 120.

Syntax

```
distance <1-255> [<ip-addr/prefix-length>]
no distance [<1-255>] [<ip-addr/prefix-length>]
```

Parameter	Description
<1-255>	The administrative distance value you are setting for this RIP route.
<ip-addr/prefix-length>	The network IP address and prefix-length that you are changing the administrative distance for.

Mode RIP Router Configuration or RIP Router Address Family Configuration for a VRF instance.

Examples To set the administrative distance to 8 for the RIP routes within the 10.0.0.0/8 network, use the commands:

```
awplus# configure terminal
awplus(config)# router rip
awplus(config-router)# distance 8 10.0.0.0/8
```

To set the administrative distance to the default of 120 for the RIP routes within the 10.0.0.0/8 network, use the commands:

```
awplus# configure terminal
awplus(config)# router rip
awplus(config-router)# no distance 8 10.0.0.0/8
```

Example (VRF-lite) This example assigns a cost of 10 to the routes for the VRF instance blue, when redistributed into RIP.

```
awplus# configure terminal
awplus(config)# router rip
awplus(config-router)# address family ipv4 blue
awplus(config-router-af)# distance 10
```

Command changes Version 5.4.6-2.1: VRF-lite support added.

distribute-list (RIP)

Overview Use this command to filter incoming or outgoing route updates using the prefix-list.

When running VRF-lite, this command can be applied to a specific VRF instance.

Use the **no** variant of this command to disable this feature.

Syntax

```
distribute-list prefix <prefix-list> {in|out} [<interface>]
no distribute-list prefix <prefix-list> {in|out}  [<interface>]
```

Parameter	Description
`prefix`	Filter prefixes in routing updates.
<prefix-list>	Specifies the name of the IPv4 prefix-list to use.
`in`	Filter incoming routing updates.
`out`	Filter outgoing routing updates.
<interface>	The interface on which distribute-list applies. For instance: `vlan2`

Default Disabled

Mode RIP Router Configuration or RIP Router Address Family Configuration for a VRF instance.

Usage Filter out incoming or outgoing route updates using prefix-list. If you do not specify the name of the interface, the filter will be applied to all interfaces.

Examples In this example the following commands are used to apply a prefix list called myfilter to filter incoming routing updates in `vlan2`

```
awplus# configure terminal
awplus(config)# router rip
awplus(config-router)# distribute-list prefix myfilter in vlan2
```

Example (VRF-lite) This example applies the commands of the previous example, but to a specific VRF named blue:

```
awplus# configure terminal
awplus(config)# router rip
awplus(config-router)# address-family ipv4 vrf blue
awplus(config-router-af)# distribute-list prefix myfilter in
vlan2
```

Command changes Version 5.4.6-2.1: VRF-lite support added.

export map

Overview This command associates a route map with a specific VRF instance. It provides a finer control over the routes that are exported out of a VRF instance by the **route-target** command. Note, however, that this command does not replace the need for a route-target export in the VRF configuration.

The **no** variant of this command disables the capability to export route map entries for a specified VRF instance.

Syntax

```
export map <route-map>
no export map
```

Parameter	Description
<route-map>	The route-map name.

Mode VRF Configuration

Usage Use this command to export route-map entries in VRF configuration mode.

Example To export the route map named routemap2 for the VRF instance named blue, use the following commands:

```
awplus# config terminal
awplus(config)# ip vrf blue
awplus(config-vrf)# export map routemap2
```

Related Commands import map

Command changes Version 5.4.6-2.1: VRF-lite support added.

fullupdate (RIP)

Overview Use this command to specify which routes RIP should advertise when performing a triggered update. By default, when a triggered update is sent, RIP will only advertise those routes that have changed since the last update. When **fullupdate** is configured, the device advertises the full RIP route table in outgoing triggered updates, including routes that have not changed. This enables faster convergence times, or allows inter-operation with legacy network equipment, but at the expense of larger update messages.

Use the **no** variant of this command to disable this feature.

Syntax

```
fullupdate
no fullupdate
```

Default By default this feature is disabled.

Mode RIP Router Configuration or RIP Router Address Family Configuration for a VRF instance.

Usage (VRF-lite) If VRF-lite is configured, you can apply this command for either the global routing environment, or to a specific VRF instance.

Example To enable the fullupdate (RIP) function, use the commands:

```
awplus# configure terminal
awplus(config)# router rip
awplus(config-router)# fullupdate
```

Example (VRF-lite) To enable the full update (RIP) function on the VRF instance named 'blue', use the commands:

```
awplus# configure terminal
awplus(config)# router rip
awplus(config-router)# address-family ipv4 vrf blue
awplus(config-router-af)# fullupdate
```

Command changes Version 5.4.6-2.1: VRF-lite support added.

import map

Overview The import map command associates a route map with a specific VRF instance. The import map command does not replace the need for a route-target import in the VRF configuration. It provides a finer control over the routes imported into a VRF instance by the **route-target** command.

The **no** variant of this command disables the capability to import route map entries for a specified VRF instance.

Syntax

```
import map <route-map>
no import map
```

Parameter	Description
<route-map>	The route-map name.

Mode VRF Configuration

Usage Use this command to import route-map entries into the specified VRF instance.

Example To import the route map named `routemap2` for the VRF instance named `blue`, use the following commands:

```
awplus# config terminal
awplus(config)# ip vrf blue
awplus(config-vrf)# import map routemap2
```

Related Commands export map

Command changes Version 5.4.6-2.1: VRF-lite support added.

ip route static inter-vrf

Overview Applying this command enables static inter-VRF routing. Note that static inter-VRF routing must be enabled before you can use the **ip route** command to create a static inter-VRF route.

The **no** variant of this command disables static inter-VRF routing.

Syntax

```
ip route static inter-vrf
no ip route static inter-vrf
```

Mode VRF Configuration

Default Static inter-VRF routing is enabled.

Example To enable static inter-VRF routing, use the following commands:

```
awplus# config terminal
awplus(config)# ip route static inter-vrf
```

Related Commands ip route

show ip route

Command changes Version 5.4.6-2.1: VRF-lite support added.

ip route

Overview This command adds a static route to the Routing Information Base (RIB). If this route is the best route for the destination, then your device adds it to the Forwarding Information Base (FIB). Your device uses the FIB to advertise routes to neighbors and forward packets.

When using VRF (Virtual Routing and Forwarding), you can use this command to configure a static inter-VRF route to a destination network that is reachable by a remote gateway located in a different VRF instance. Note that to apply the command in this way, the ip route static inter-vrf command must be in enabled (its default condition). For more information about VRF, see the VRF Feature Overview and Configuration Guide and the VRF-lite Commands chapter.

The **no** variant of this command removes the static route from the RIB and FIB.

Syntax

```
ip route <subnet&mask> {<gateway-ip>|<interface>} [<distance>]
no ip route <subnet&mask> {<gateway-ip>|<interface>}
[<distance>]
```

Syntax (VRF-lite)

```
ip route [vrf <vrf-name>] <subnet&mask> [<gateway-ip>]
[<interface>] [<distance>]
no ip route [vrf <vrf-name>] <subnet&mask> [<gateway-ip>]
[<interface>] [<distance>]
```

Parameter	Description
<subnet&mask>	The IPv4 address of the destination subnet defined using either a prefix length or a separate mask specified in one of the following formats: • The IPv4 subnet address in dotted decimal notation followed by the subnet mask, also in dotted decimal notation. • The IPv4 subnet address in dotted decimal notation, followed by a forward slash, then the prefix length
<gateway-ip>	The IPv4 address of the gateway device.
<interface>	The interface that connects your device to the network. Enter the name of the VLAN or its VID. You can also enter 'null' as an interface. Specify a 'null' interface to add a null or blackhole route to the switch. The gateway IP address or the interface is required if VRF-lite is not configured. If VRF-lite is configured: When adding a static intra-VRF route, you must specify either the gateway IP address or the interface. When adding a static inter-VRF route, you must specify both the gateway IP address and the interface.
<distance>	The administrative distance for the static route in the range <1-255>. Static routes by default have an administrative distance of 1.

Parameter	Description
`vrf`	Applies the command to the specified VRF instance.
<vrf-name>	The name of the VRF instance to enter IPv4 Address-Family mode for.

Mode Global Configuration

Default The default administrative distance for a static route is 1 for priority over non-static routes.

Usage Administrative distance can be modified so that static routes do not take priority over other routes.

Specify a 'Null' interface to add a null or blackhole route to the switch. A null or blackhole route is a routing table entry that does not forward packets, so any packets sent to it are dropped.

Examples To add the destination 192.168.3.0 with the mask 255.255.255.0 as a static route available through the device at "10.10.0.2" with the default administrative distance, use the commands:

```
awplus# configure terminal
awplus(config)# ip route 192.168.3.0 255.255.255.0 10.10.0.2
```

To remove the destination 192.168.3.0 with the mask 255.255.255.0 as a static route available through the device at "10.10.0.2" with the default administrative distance, use the commands:

```
awplus# configure terminal
awplus(config)# no ip route 192.168.3.0 255.255.255.0 10.10.0.2
```

To specify a null or blackhole route 192.168.4.0/24, so packets forwarded to this route are dropped, use the commands:

```
awplus# configure terminal
awplus(config)# ip route 192.168.4.0/24 null
```

To add the destination 192.168.3.0 with the mask 255.255.255.0 as a static route available through the device at "10.10.0.2" with an administrative distance of 128, use the commands:

```
awplus# configure terminal
awplus(config)# ip route 192.168.3.0 255.255.255.0 10.10.0.2
128
```

Examples (VRF-lite) To create a static route from source VRF instance red, to the subnet 192.168.50.0/24 with a next hop of 192.168.20.6, use the following commands for static intra-VRF routing configuration:

```
awplus# configure terminal
awplus(config)# ip route vrf red 192.168.50.0/24 192.168.20.6
```

To remove a static route from source VRF red, to the subnet 192.168.50.0/24 with a next hop of 192.168.20.6, use the following commands for static intra-VRF routing configuration:

```
awplus# configure terminal
awplus(config)# no ip route vrf red 192.168.50.0/24
192.168.20.6
```

To create a static route from source VRF red, to the subnet 192.168.50.0/24 with a next hop of 192.168.20.6 via vlan10, use the following commands for static inter-VRF routing configuration:

```
awplus# configure terminal
awplus(config)# ip route vrf red 192.168.50.0/24 192.168.20.6
vlan10
```

Related Commands

show ip route

show ip route database

Command changes

Version 5.4.6-2.1: VRF-lite support added.

ip vrf

Overview This command creates a VRF instance and specifies its unique name. You can also optionally specify a VRF ID. If you do not specify the VRF ID, a unique ID will automatically be created and assigned to the VRF instance.

The **no** variant of this command removes a selected VRF instance. All interfaces previously belonging to the removed instance are then returned to the global routing and forwarding environment.

Syntax

```
ip vrf <vrf-name> [<vrf-inst-id>]
no ip vrf <vrf-name> [<vrf-inst-id>]
```

Parameter	Description
<vrf-name>	The name of the VRF instance.
<vrf-inst-id>	The ID of the VRF instance, a number in the range 1 to 8.

Mode Global Configuration

Default Static inter-VRF routing is enabled.

Example To create a VRF instance named `vrf blue` and assign it the ID number `2`, use the following commands:

```
awplus# config terminal
awplus(config)# ip vrf blue 2
```

Command changes Version 5.4.6-2.1: VRF-lite support added.

ip vrf forwarding

Overview This command associates a VRF instance with an interface.

The **no** variant of this command disassociates the VRF instance from its interface.

Syntax

```
ip vrf forwarding <vrf-name>
no ip vrf <vrf-name>
```

Parameter	Description
<vrf-name>	The name of the VRF instance.

Mode Interface Configuration

Default The default for an interface is the global routing table.

Examples For LAN interfaces, to associate the VRF instance named `blue` with the VLAN interface `vlan-admin`, use the following commands:

```
awplus# config terminal
awplus(config)# interface vlan-admin
awplus(config-if)# ip vrf forwarding blue
```

Related Commands show ip vrf

show ip vrf detail

Command changes Version 5.4.6-2.1: VRF-lite support added.

max-fib-routes (VRF)

Overview This command now enables you to control the maximum number of FIB routes configured for a VRF instance. It operates by providing parameters that enable you to configure preset maximums and warning message thresholds.

NOTE: *This command applies to a user-defined VRF instance; to set the max-fib-routes for the Global VRF instance use the max-fib-routes command. For static routes use the max-static-routes command for the Global VRF instance and the max-static-routes (VRF) command for a user-defined VRF instance.*

Use the **no** variant of this command to set the maximum number of FIB routes to the default of 4294967294 FIB routes.

Syntax

```
max-fib-routes <1-4294967294> [<1-100>|warning-only]
no max-fib-routes
```

Parameter	Description
`max-fib-routes`	The maximum number of routes that can be stored in Forwarding Information dataBase for either the Global VRF or a VRF instance.
`<1-4294967294>`	The allowable configurable range for setting the maximum number of FIB-routes.
`<1-100>`	This parameter enables you to optionally apply a percentage value. This percentage will be based on the maximum number of FIB routes you have specified. This will cause a warning message to appear when your routes reach your specified percentage value. Routes can continue to be added until your configured maximum value is reached.
`warning-only`	This parameter enables you to optionally apply a warning message. If you set this option a warning message will appear if your maximum configured value configured. Routes can continue to be added until your switch reaches either the maximum capacity value of 4294967294, or a practical system limit.

Mode VRF Configuration

Default Sets the maximum number of dynamic routes to 4294967294 and no warning threshold.

Examples To set the maximum number of dynamic routes to 2000 and warning threshold of 75% on VRF instance blue, use the commands:

```
awplus# config terminal
awplus(config)# ip vrf blue
awplus(config-vrf)# max-fib-routes 2000 75
```

Related Commands

max-fib-routes

show ip route

Command changes

Version 5.4.6-2.1: VRF-lite support added.

max-static-routes (VRF)

Overview Use this command to set the maximum number of static routes (excluding FIB—Forwarding Information Base routes) for VRF instances. A limit of 1000 static routes can be assigned to each individual VRF instance. For example you can assign 800 static routes to the Global VRF, then also assign 600 static routes to VRF instance Blue, and a further 600 routes to VRF instance Green.

NOTE: *This command applies to a user-defined VRF instance; to set the max-static-routes for the Global VRF instance use the max-static-routes command. For FIB routes use the max-fib-routes command for the Global VRF instance and the max-fib-routes (VRF) command for a user-defined VRF instance.*

Use the **no** variant of this command to reset the maximum number of static routes to the default value of 1000.

Syntax

```
max-static-routes <1-1000>
no max-static-routes
```

Default The default number of static routes is the maximum number of static routes (1000).

Mode VRF Configuration

Example To assign 200 static routes to VRF instance Blue, use the following commands:

```
awplus# configure terminal
awplus(config)# ip vrf blue
awplus(condig-vrf)# max-static-routes 200
```

NOTE: *Static routes are applied before adding routes to the RIB (Routing Information Base). Therefore, rejected static routes will not appear in the running config.*

Related Commands max-fib-routes (VRF)

Command changes Version 5.4.6-2.1: VRF-lite support added.

neighbor next-hop-self

Overview Use this command to configure the BGP or BGP4+ router as the next hop for a BGP or BGP4+ speaking neighbor or peer group.

Use the **no** variant of this command to disable this feature.

Syntax

```
neighbor <neighborid> next-hop-self
no neighbor <neighborid> next-hop-self
```

Parameter	Description	
<neighborid>	{*<ip-address>* | *<ipv6-addr>* | *<peer-group>*}	
	<ip-address>	Specify the address of an IPv4 BGP neighbor, in dotted decimal notation A.B.C.D.
	<ipv6-addr>	Specify the address of an IPv6 BGP4+ neighbor, entered in hexadecimal in the format X:X::X:X.
	<peer-group>	Enter the name of an existing peer-group. For information on how to create peer groups, refer to the neighbor peer-group (add a neighbor) command, and neighbor route-map command. When this parameter is used with this command, the command applies on all peers in the specified group.

Mode [BGP] Router Configuration or IPv4 Address Family Configuration

Mode [BGP4+] IPv6 Address Family Configuration

Usage This command allows a BGP or BGP4+ router to change the next hop information that is sent to the iBGP peer. The next hop information is set to the IP address of the interface used to communicate with the neighbor.

This command can be run for a specific VRF instance.

Examples [BGP]

```
awplus# configure terminal
awplus(config)# router bgp 10
awplus(config-router)# neighbor 10.10.0.72 next-hop-self
awplus# configure terminal
awplus(config)# router bgp 10
awplus(config-router)# no neighbor 10.10.0.72 next-hop-self
awplus# configure terminal
awplus(config)# router bgp 10
awplus(config-router)# address-family ipv4
awplus(config-router)# neighbor 10.10.0.72 next-hop-self
awplus# configure terminal
awplus(config)# router bgp 10
awplus(config-router)# address-family ipv4
awplus(config-router)# no neighbor 10.10.0.72 next-hop-self
awplus# configure terminal
awplus(config)# router bgp 10
awplus(config-router)# neighbor group1 peer-group
awplus(config-router)# neighbor 10.10.10.72 remote-as 10
awplus(config-router)# neighbor 10.10.10.72 peer-group group1
awplus(config-router)# neighbor group1 next-hop-self
awplus# configure terminal
awplus(config)# router bgp 10
awplus(config-router)# no neighbor group1 next-hop-self
```

Examples [BGP4+]

```
awplus# configure terminal
awplus(config)# router bgp 10
awplus(config-router)# address-family ipv6
awplus(config-router-af)# neighbor 2001:0db8:010d::1
next-hop-self
awplus# configure terminal
awplus(config)# router bgp 10
awplus(config-router)# address-family ipv6
awplus(config-router-af)# no neighbor 2001:0db8:010d::1
next-hop-self
awplus# configure terminal
awplus(config)# router bgp 10
awplus(config-router)# neighbor group1 peer-group
awplus(config-router)# neighbor 2001:0db8:010d::1 remote-as 10
awplus(config-router)# address-family ipv6
awplus(config-router-af)# neighbor 2001:0db8:010d::1
peer-group group1
awplus(config-router-af)# neighbor group1 next-hop-self
awplus# configure terminal
awplus(config)# router bgp 10
awplus(config-router)# address-family ipv6
awplus(config-router-af)# no neighbor group1 next-hop-self
```

Related Commands

neighbor peer-group (add a neighbor)

neighbor route-map

neighbor remote-as

Overview Use this command to configure an internal or external BGP or BGP4+ (iBGP or eBGP) peering relationship with another router.

Use the **no** variant of this command to remove a previously configured BGP or BGP4+ peering relationship.

Syntax

```
neighbor <neighborid> remote-as <as-number>
no neighbor <neighborid> remote-as <as-number>
```

Syntax (VRF- lite)

```
neighbor <neighborid> remote-as <as-number> [global|vrf
<vrf-name>]
no neighbor <neighborid> remote-as <as-number>
```

Parameter	Description	
<neighborid>	{*<ip-address>* | *ipv6-addr>* | *<peer-group>*}	
	<ip-address>	Specify the address of an IPv4 BGP neighbor, in dotted decimal notation A.B.C.D.
	<ipv6-addr>	Specify the address of an IPv6 BGP4+ neighbor, entered in hexadecimal in the format X:X::X:X.
	<peer-group>	Enter the name of an existing peer-group. For information on how to create peer groups, refer to the neighbor peer-group (add a neighbor) command, and neighbor route-map command. When this parameter is used with this command, the command applies on all peers in the specified group.
<as-number>	*<1-4294967295>* Neighbor's Autonomous System (AS) number.	
global	Specify that the remote neighbor exists locally within the device, in the global routing domain	
vrf	Specify that the remote neighbor exists locally within the device, in the specified VRF instance.	
<vrf-name>	The name of the VRF instance.	

Mode [BGP] Router Configuration or IPv4 Address Family Configuration

Mode [BGP4+] Router Configuration

Usage This command is used to configure iBGP and eBGP peering relationships with other BGP or BGP4+ neighbors. A peer-group support of this command is configured only after creating a specific peer-group. Use the **no** variant of this command to remove a previously configured BGP peering relationship.

The **vrf** and **global** parameters are used to create internal 'loopback' BGP connections within the device between two VRF instances. This is used to leak BGP routes between a named VRF instance and the global routing instance. This requires BGP neighbors to be configured in both the global routing instance and in the named VRF instance.

Examples [BGP]

To configure a BGP peering relationship from the neighbor with the IPv4 address 10.10.0.73 with another router:

```
awplus# configure terminal
awplus(config)# router bgp 10
awplus(config-router)# neighbor 10.10.0.73 remote-as 10
```

To remove a configured BGP peering relationship from the neighbor with the IPv4 address 10.10.0.73 from another router:

```
awplus# configure terminal
awplus(config)# router bgp 10
awplus(config-router)# no neighbor 10.10.0.73 remote-as 10
```

To configure a BGP peering relationship from the neighbor with the peer group named group1 with another router:

```
awplus# configure terminal
awplus(config)# router bgp 10
awplus(config-router)# neighbor group1 peer-group
awplus(config-router)# neighbor 10.10.10.1 remote-as 10
awplus(config-router)# neighbor 10.10.10.1 peer-group group1
awplus(config-router)# neighbor group1 remote-as 10
```

To remove a configured BGP peering relationship from the neighbor with the peer group named group1 with another router:

```
awplus# configure terminal
awplus(config)# router bgp 10
awplus(config-router)# no neighbor group1 remote-as 10
```

Examples [BGP4+]

To configure a BGP4+ peering relationship with another router:

```
awplus# configure terminal
awplus(config)# router bgp 11
awplus(config-router)# neighbor 2001:0db8:010d::1 remote-as 345
```

To remove a configured BGP4+ peering relationship from another router:

```
awplus# configure terminal
awplus(config)# router bgp 11
awplus(config-router)# no neighbor 2001:0db8:010d::1 remote-as
345
```

To configure a BGP4+ peering relationship from the neighbor with the peer group named group1 with another router:

```
awplus# configure terminal
awplus(config)# router bgp 10
awplus(config-router)# neighbor group1 peer-group
awplus(config-router)# neighbor 2001:0db8:010d::1 remote-as 10
awplus(config-router)# address-family ipv6
awplus(config-router-af)# neighbor 2001:0db8:010d::1
peer-group group1
awplus(config-router-af)# exit
awplus(config-router)# neighbor group1 remote-as 10
```

To remove a configured BGP4+ peering relationship from the neighbor with the peer group named group1 with another router:

```
awplus# configure terminal
awplus(config)# router bgp 10
awplus(config-router)# no neighbor group1 remote-as 10
```

Command changes

Version 5.4.6-2.1: VRF-lite support added.

neighbor password

Overview Use this command to enable MD5 authentication on a TCP connection between BGP and BGP4+ neighbors. No authentication is applied by default. To setup authentication for the session, you must first apply authentication on each connected peer for the session.

Use the **no** variant of this command to disable this function.

Syntax [BGP]

```
neighbor {<ip-address>|<peer-group-name>} password <password>
no neighbor {<ip-address>|<peer-group-name>} password
[<password>]
```

Syntax [BGP4+]

```
neighbor {<ipv6-addr>|<peer-group-name>} password <password>
no neighbor {<ipv6-addr>|<peer-group-name>} password
[<password>]
```

Parameter	Description
<ip-address>	Specifies the IP address of the BGP neighbor, in A.B.C.D format.
<ipv6-addr>	Specifies the IPv6 address of the BGP4+ neighbor, entered in hexadecimal in the format X:X::X:X.
<peer-group-name>	Name of an existing peer-group. When this parameter is used with this command, the command applies on all peers in the specified group.
<password>	An alphanumeric string of characters to be used as password.

Default No authentication is applied by default.

Mode [BGP] Router Configuration or IPv4 Address Family Configuration

Mode [BGP4+] Router Configuration

Usage When using the *<peer-group-name>* parameter with this command (to apply this command to all peers in the group), see the related commands neighbor peer-group (add a neighbor) and neighbor route-map for information about how to create peer groups first.

Examples [BGP] This example specifies the encryption type and the password 'manager' for the neighbor `10.10.10.1`:

```
awplus# configure terminal
awplus(config)# router bgp 10
awplus(config-router)# neighbor 10.10.10.1 password manager
```

This example removes the password set for the neighbor `10.10.10.1`:

```
awplus# configure terminal
awplus(config)# router bgp 10
awplus(config-router)# no neighbor 10.10.10.1 password
```

This example specifies the encryption type and the password 'manager' for the neighbor peer group named 'group1':

```
awplus# configure terminal
awplus(config)# router bgp 10
awplus(config-router)# neighbor group1 peer-group
awplus(config-router)# neighbor 10.10.10.1 remote-as 10
awplus(config-router)# neighbor 10.10.10.1 peer-group group1
awplus(config-router)# neighbor group1 password manager
```

This example removes the password set for the neighbor peer group named `group1`:

```
awplus# configure terminal
awplus(config)# router bgp 10
awplus(config-router)# no neighbor group1 password
```

Examples (VRF-lite)

This example specifies the password ('manager') for the neighbor peer group named 'group1' for an IPv4 address-family VRF instance name 'red', and router bgp 10:

```
awplus# configure terminal
awplus(config)# router bgp 10
awplus(config-router)# address-family ipv4 vrf red
awplus(config-router-af)# neighbor 10.10.10.1 password manager
```

This example removes the password ('manager') for the neighbor peer group named 'group1' for an IPv4 address-family, VRF instance name 'red', and router bgp 10:

```
awplus# configure terminal
awplus(config)# router bgp 10
awplus(config-router)# address-family ipv4 vrf red
awplus(config-router-af)# no neighbor 10.10.10.1 password
manager
```

This example specifies the password ('manager') for the neighbor peer group named 'group1' for an IPv4 address-family, VRF instance name 'red', and router bgp 10:

```
awplus# configure terminal
awplus(config)# router bgp 10
awplus(config-router)# neighbor group1 peer-group
awplus(config-router)# neighbor 10.10.10.1 remote-as 10
awplus(config-router)# neighbor 10.10.10.1 peer-group group1
awplus(config-router)# address-family ipv4 vrf red
awplus(config-router-af)# neighbor group1 password manager
```

Examples [BGP4+]

This example specifies the encryption type and the password 'manager' for the neighbor `2001:0db8:010d::1`:

```
awplus# configure terminal
awplus(config)# router bgp 10
awplus(config-router)# neighbor password manager
2001:0db8:010d::1
```

This example removes the password set for the neighbor `2001:0db8:010d::1`:

```
awplus# configure terminal
awplus(config)# router bgp 10
awplus(config-router)# no neighbor password 2001:0db8:010d::1
```

This example specifies the encryption type and the password 'manager' for the neighbor peer group named `group1`:

```
awplus# configure terminal
awplus(config)# router bgp 10
awplus(config-router)# neighbor group1 peer-group
awplus(config-router)# neighbor  remote-as 102001:0db8:010d::1
awplus(config-router)# address-family ipv6
awplus(config-router-af)# neighbor peer-group group1
2001:0db8:010d::1
awplus(config-router-af)# exit
awplus(config-router)# neighbor group1 password manager
```

This example removes the password set for the neighbor peer group named 'group1':

```
awplus# configure terminal
awplus(config)# router bgp 10
awplus(config-router)# no neighbor group1 password
```

Related Commands

neighbor peer-group (add a neighbor)

neighbor route-map

Command changes Version 5.4.6-2.1: VRF-lite support added.

network (RIP)

Overview Use this command to activate the transmission of RIP routing information on the defined network.

Use the **no** variant of this command to remove the specified network or VLAN as one that runs RIP.

Syntax

```
network {<network-address>[/<subnet-mask>]|<vlan-name>}
no network {<network-address>[/<subnet-mask>]|<vlan-name>}
```

Parameter	Description
<network-address> *[/<subnet-mask>]*	Specifies the network address to run RIP. Entering a subnet mask (or prefix length) for the network address is optional. Where no mask is entered, the device will attempt to apply a mask that is appropriate to the class (A, B, or C) of the address entered, e.g. an IP address of 10.0.0.0 will have a prefix length of 8 applied to it.
<vlan-name>	Specify a VLAN name with up to 32 alphanumeric characters to run RIP.

Default Disabled

Mode RIP Router Configuration or RIP Router Address Family Configuration for a VRF instance.

Usage Use this command to specify networks, or VLANs, to which routing updates will be sent and received. The connected routes corresponding to the specified network, or VLANs, will be automatically advertised in RIP updates. RIP updates will be sent and received within the specified network or VLAN.

When running VRF-lite, this command can be applied to a VRF instance.

Example Use the following commands to activate RIP routing updates on network 172.16.20.0/24:

```
awplus# configure terminal
awplus(config)# router rip
awplus(config-router)# network 172.16.20.0/24
```

Example (VRF-lite) To activate RIP routing updates on vlan3 for VRF instance 'blue'.

```
awplus# configure terminal
awplus(config)# router rip
awplus(config-router)# address-family ipv4 vrf blue
awplus(config-router-af)# network vlan3
```

Related Commands

show ip rip

show running-config

clear ip rip route

Command changes

Version 5.4.6-2.1: VRF-lite support added.

passive-interface (RIP)

Overview Use this command to block RIP broadcasts on the interface.

Use the **no** variant of this command to disable this function.

Syntax

```
passive-interface <interface>
no passive-interface <interface>
```

Parameter	Description
<interface>	Specifies the interface name.

Default Disabled

Mode RIP Router Configuration or RIP Router Address Family Configuration for a VRF instance.

Example Use the following commands to block RIP broadcasts on vlan20:

```
awplus# configure terminal
awplus(config)# router rip
awplus(config-router)# passive-interface vlan20
```

Example (VRF-lite) To apply this above example to a specific VRF instance named 'green', use the following commands:

```
awplus# configure terminal
awplus(config)# router rip
awplus(config-router)# address-family ipv4 vrf green
awplus(config-router-af)# passive-interface vlan20
```

Related Commands show ip rip

Command changes Version 5.4.6-2.1: VRF-lite support added.

ping

Overview This command sends a query to another IPv4 host (send Echo Request messages).

Syntax

```
ping [ip] <host> [broadcast] [df-bit {yes|no}] [interval
<0-128>] [pattern <hex-data-pattern>] [repeat
{<1-2147483647>|continuous}] [size <36-18024>] [source
<ip-addr>] [timeout <1-65535>] [tos <0-255>]
```

Syntax (VRF-lite)

```
ping [vrf <vrf-name>] [ip] <host> [broadcast] [df-bit {yes|no}]
[interval <0-128>] [pattern <hex-data-pattern>] [repeat
{<1-2147483647>|continuous}] [size <36-18024>] [source
<ip-addr>] [timeout <1-65535>] [tos <0-255>]
```

Parameter	Description
<host>	The destination IP address or hostname.
broadcast	Allow pinging of a broadcast address.
df-bit	Enable or disable the do-not-fragment bit in the IP header.
interval *<0-128>*	Specify the time interval in seconds between sending ping packets. The default is 1. You can use decimal places to specify fractions of a second. For example, to ping every millisecond, set the interval to 0.001.
pattern *<hex-data-pattern>*	Specify the hex data pattern.
repeat	Specify the number of ping packets to send.
<1-2147483647>	Specify repeat count. The default is 5.
continuous	Continuous ping
size *<36-18024>*	The number of data bytes to send, excluding the 8 byte ICMP header. The default is 56 (64 ICMP data bytes).
source *<ip-addr>*	The IP address of a configured IP interface to use as the source in the IP header of the ping packet.
timeout *<1-65535>*	The time in seconds to wait for echo replies if the ARP entry is present, before reporting that no reply was received. If no ARP entry is present, it does not wait.
tos *<0-255>*	The value of the type of service in the IP header.
vrf	Apply the command to the specified VRF instance.
<vrf-name>	The name of the VRF instance.

Mode User Exec and Privileged Exec

Example To ping the IP address 10.10.0.5 use the following command:

```
awplus# ping 10.10.0.5
```

Example (VRF-lite)

To ping the IP address 10.10.0.5 from VRF instance 'red', use the following command:

```
awplus# ping vrf red 10.10.0.5
```

NOTE: *Unless a cross-domain static or leaked route exists to the destination IP address, you must run this command from within the same routing domain as the address being pinged.*

Command changes

Version 5.4.6-2.1: VRF-lite support added.

rd (route distinguisher)

Overview This command creates a Route Distinguisher (RD). The RD forms part of the route table creation process for a VRF instance and is implemented only when using BGP routing.

Syntax

```
rd {<ASN:n>|<ip-address:n>}
```

CAUTION: *This command does not have a "no" variant. To remove the RD requires deleting the VRF instance to which it is assigned. Therefore, it is important that you carefully enter the correct value for the RD.*

Parameter	Description
<ASN:n>	The RD reference number. This is based on the formal RD format structure of ASN number:Ref number. The ASN value can be any number between 1 and 4294967295, and the value n can be any number between 1 and 65535.
<ip-address:n>	The RD reference number. This is based on the formal RD format structure of IP-address:Ref number. The IP-address must be in IPv4 format. The value n can be any number between 1 and 65535.

NOTE: *The above table refers to an ASN or Autonomous System Number. If you have a formal ASN number assigned to your BGP network, you should enter this value. Alternatively; because the Route Distinguisher has limited functionality in VRF-lite, you can use an unofficial value for your ASN when configuring this particular command.*

Mode VRF Configuration

Usage For the implementation of VRF-lite installed on your switch, this command has little practical functionality. However, the switch does check certain components of the RD that you enter. For this reason, the RD syntax must comply with the structural formats defined above, and each value that you assign to a VRF instance must be unique on the switch. Good networking practice is to use common values for the RD and RT within a VRF instance.

Default No default RD is configured.

Example To create an RD 100:2 that is associated with VRF "red" use the following commands:

```
awplus# config terminal
awplus(config)# ip vrf red
awplus(config-vrf)# rd 100:2
```

Related Commands show ip vrf

redistribute (into BGP or BGP4+)

Overview Use this command to inject routes from one routing process into a BGP or BGP4+ routing table.

Use the **no** variant of this command to disable this function.

Syntax

```
redistribute {ospf|rip|connected|static} [route-map
<route-map-entry-pointer>]
```

```
no redistribute {ospf|rip|connected|static} [route-map
<route-map-entry-pointer>]
```

Parameter	Description
`connected`	Specifies the redistribution of connected routes for both BGP and BGP4+.
`ospf`	Specifies the redistribution of OSPF information for BGP or OSPFv3 information for BGP4+.
`rip`	Specifies the redistribution of RIP information for BGP or RIPng information for BGP4+.
`static`	Specifies the redistribution of Static routes for both BGP and BGP4+.
`route-map`	Route map reference for both BGP and BGP4+.
`<route-map-entry-pointer>`	Pointer to route-map entries.

Mode [BGP] Router Configuration or IPv4 Address Family Configuration

Mode [BGP4+] Router Configuration or IPv6 Address Family Configuration

Usage Redistribution is used by routing protocols to advertise routes that are learned by some other means, such as by another routing protocol or by static routes. Since all internal routes are dumped into BGP, careful filtering is applied to make sure that only routes to be advertised reach the internet, not everything. This command allows redistribution by injecting prefixes from one routing protocol into another routing protocol.

Examples [BGP/ BGP+] The following example shows the configuration of a route-map named `rmap1`, which is then applied using the **redistribute route-map** command.

```
awplus# configure terminal
awplus(config)# route-map rmap1 permit 1
awplus(config-route-map)# match origin incomplete
awplus(config-route-map)# set metric 100
awplus(config-route-map)# exit
awplus(config)# router bgp 12
awplus(config-router)# redistribute ospf route-map rmap1
```

To apply the above example to a specific VRF instance named `blue`, use the following commands:

```
awplus(config)# router bgp 12
awplus(config-router)# address-family ipv4 vrf blue
awplus(config-router-af)# redistribute ospf route-map rmap1
```

The following example shows the configuration of a route-map named `rmap2`, which is then applied using the **redistribute route-map** command.

```
awplus# configure terminal
awplus(config)# route-map rmap2 permit 3
awplus(config-route-map)# match interface vlan1
awplus(config-route-map)# set metric-type 1
awplus(config-route-map)# exit
awplus(config)# router ospf 100
awplus(config-router)# redistribute bgp route-map rmap2
```

Note that configuring a route-map and applying it with the redistribute route-map command allows you to filter which router are distributed from another routing protocol (such as OSPF with BGP). A route-map can also set the metric, tag, and metric-type of the redistributed routes.

Command changes

Version 5.4.6-2.1: VRF-lite support added.

redistribute (OSPF)

Overview Use this command to redistribute routes from other routing protocols, static routes and connected routes into an OSPF routing table.

Use the **no** variant of this command to disable this function.

Syntax

```
redistribute {bgp|connected|rip|static} {metric
<0-16777214>|metric-type {1|2}|route-map <name>|tag
<0-4294967295>}
```

```
no redistribute {bgp|connected|rip|static} {metric
<0-16777214>|metric-type {1|2}|route-map <name>|tag
<0-4294967295>}
```

Parameter	Description
`bgp`	Specifies that this applies to the redistribution of BGP routes.
`connected`	Specifies that this applies to the redistribution of connected routes.
`rip`	Specifies that this applies to the redistribution of RIP routes.
`static`	Specifies that this applies to the redistribution of static routes.
`metric`	Specifies the external metric.
`metric-type`	Specifies the external metric-type.
`route-map`	Specifies name of the route-map.
`tag`	Specifies the external route tag.

Default The default metric value for routes redistributed into OSPF is 20. The metric can also be defined using the set metric command for a route map. Note that a metric defined using the set metric command for a route map overrides a metric defined with this command.

Mode Router Configuration

Usage You use this command to inject routes, learned from other routing protocols, into the OSPF domain to generate AS-external-LSAs. If a route-map is configured by this command, then that route-map is used to control which routes are redistributed and can set metric and tag values on particular routes.

The metric, metric-type, and tag values specified on this command are applied to any redistributed routes that are not explicitly given a different metric, metric-type, or tag value by the route map.

See the OSPF Feature Overview and Configuration Guide for more information about metrics, and about behavior when configured in route maps.

Note that this command does not redistribute the default route. To redistribute the default route, use the default-information originate command.

Example The following example shows the configuration of a route-map named `rmap2`, which is then applied using the **redistribute route-map** command, so routes learned via interface vlan1 can be redistributed as type-1 external LSAs:

```
awplus# configure terminal
awplus(config)# route-map rmap2 permit 3
awplus(config-route-map)# match interface vlan1
awplus(config-route-map)# set metric-type 1
awplus(config-route-map)# exit
awplus(config)# router ospf 100
awplus(config-router)# redistributebgp rip route-map rmap2
```

Note that configuring a route-map and applying it with the **redistribute route-map** command allows you to filter which routes are distributed from another routing protocol (such as RIP). A route-map can also set the metric, tag, and metric-type of the redistributed routes.

Related Commands

match interface

route-map

show ip ospf database external

redistribute (RIP)

Overview Use this command to redistribute information from other routing protocols into RIP.

When using VRF-lite, you can apply this command to a specific VRF instance.

Use the **no** variant of this command to disable the specified redistribution. The parameters **metric** and **routemap** may be used on this command, but have no effect.

Syntax

```
redistribute {connected|static|ospf|bgp} [metric <0-16>]
[routemap <routemap>]
```

```
no redistribute {connected|static|ospf|bgp} [metric] [routemap]
```

Parameter	Description
`routemap`	Optional. Specifies route-map that controls how routes are redistributed.
`<routemap>`	Optional. The name of the route map.
`connected`	Redistribute from connected routes.
`static`	Redistribute from static routes.
`ospf`	Redistribute from Open Shortest Path First (OSPF).
`bgp`	Redistribute from Border Gateway Protocol (BGP).
`metric <0-16>`	Optional. Sets the value of the metric that will be applied to routes redistributed into RIP from other protocols. If a value is not specified, and no value is specified using the default-metric (RIP) command, the default is one.

Default By default, the RIP metric value is set to 1.

Mode RIP Router Configuration or RIP Router Address Family Configuration for a VRF instance.

Example To apply the metric value 15 to static routes being redistributed into RIP, use the commands:

```
awplus# configure terminal
awplus(config)# router rip
awplus(config-router)# redistribute static metric 15
```

Example (VRF-lite)

To apply the metric value 15 to static routes in address-family ipv4 VRF instance `blue` being redistributed into RIP, use the following commands:

```
awplus# configure terminal
awplus(config)# router rip
awplus(config-router)# address-family ipv4 vrf blue
awplus(config-router-af)# redistribute static metric 15
```

Related Commands

default-metric (RIP)

Command changes

Version 5.4.6-2.1: VRF-lite support added.

route (RIP)

Overview Use this command to add a static RIP route.

Use the **no** variant of this command to remove a static RIP route.

Syntax

```
route <ip-addr/prefix-length>
no route <ip-addr/prefix-length>
```

Parameter	Description
<ip-addr/prefix-length>	The IPv4 address and prefix length.

Default No static RIP route is added by default.

Mode RIP Router Configuration or RIP Router Address Family Configuration for a VRF instance.

Usage Use this command to add a static RIP route. After adding the RIP route, the route can be checked in the RIP routing table.

Example To create a static RIP route to IP subnet 192.168.1.0/24, use the following commands:

```
awplus# configure terminal
awplus(config)# router rip
awplus(config-router)# route 192.168.1.0/24
```

Example (VRF-lite) To create a static RIP route to IP subnet `192.168.1.0/24`, for the VRF instance `red`, use the following commands

```
awplus# configure terminal
awplus(config)# router rip
awplus(config-router)# address-family ipv4 vrf red
awplus(config-router-af)# route 192.168.1.0/24
```

Related Commands show ip rip

clear ip rip route

Command changes Version 5.4.6-2.1: VRF-lite support added.

route-target

Overview Use this command within a specific VRF instance, to create a route-target within the BGP extended communities path attribute field. This value can then be included in a list of import and export route target extended communities for the specified VRF instance. Learned routes that carry a specific route-target extended community are then imported into all VRFs configured with that extended community as an imported route-target.

The **no** variant of this command removes a route-target extended community for the VRF instance specified.

Syntax

```
route-target {import|export|both} {ASN:n|ip-address:n}
no route-target {import|export|both} {ASN:n|ip-address:n}
```

Parameter	Description
`route-target`	Specifies a BGP extended community as a route-target.
`import`	Adds the route target to its import list.
`export`	Adds the route target to its export list.
`both`	Adds the route target to both the import and export lists.
<ASN:n>	The route target reference number. This uses the same structure that is defined for the RD. This being, ASN number:Ref number. The ASN value can be any number between 1 and 65535, and the value n can be any number between 1 and 4294967295.
<ip-address:n>	The route target reference number. This uses the same structure that is defined for the RD (Route Distinguisher). This being IP-address:Ref number. In practice, the IP-address can be an entry in IPv4 format, or an integer number between 1 and 4294967295. The value n can be any number between 1 and 65535.

Mode VRF Configuration

Default No route-target community attributes are associated with a VRF instance.

Usage In VRF systems that use MPLS, there is an close relationship between the Route Target (RT) and the Route Distinguisher (RD) values. For VRF-lite however, this relationship is only implicit in that they share the same format structure.

Example Use the following commands to create a route-target extended community for ASN value 200, and a Reference number of 3, within the VRF instance blue:

```
awplus# config terminal
awplus(config)# ip vrf blue
awplus(config-vrf)# route-target import 200:1
```

Related Commands

ip vrf

show ip vrf

router ospf

Overview Use this command to enter Router Configuration mode to configure an OSPF routing process. You must specify the process ID with this command for multiple OSPF routing processes on the device.

Use the **no** variant of this command to terminate an OSPF routing process.

Use the **no** parameter with the **process-id** parameter, to terminate and delete a specific OSPF routing process. If no **process-id** is specified on the **no** variant of this command, then all OSPF routing processes are terminated, and all OSPF configuration is removed.

Syntax

```
router ospf [<process-id>]
no router ospf [<process-id>]
```

Syntax (VRF-lite)

```
router ospf [<process-id>] [<vrf-instance>]
no router ospf [<process-id>]
```

Parameter	Description
<process-id>	A positive number from 1 to 65535, that is used to define a routing process.
<vrf-instance>	The VRF instance to be associated with the OSPF routing process.

Default No routing process is defined by default.

Mode Global Configuration

Usage The process ID of OSPF is an optional parameter for the **no** variant of this command only. When removing all instances of OSPF, you do not need to specify each Process ID, but when removing particular instances of OSPF you must specify each Process ID to be removed.

When using VRF-lite, this command can be used to associate a process-id with a VRF instance that has been created using the ip vrf command.

Example To enter Router Configuration mode to configure an existing OSPF routing process `100`, use the commands:

```
awplus# configure terminal
awplus(config)# router ospf 100
awplus(config-router)#
```

Example (VRF-lite) To enter Router Configuration mode to configure an existing OSPF routing process `100` for VRF instance `red`, use the commands:

```
awplus# configure terminal
awplus(config)# router ospf 100 red
awplus(config-router)#
```

Command changes Version 5.4.6-2.1: VRF-lite support added.

router-id (VRF)

Overview Use this command to specify a router identifier (in IP address format). When using VRF-Lite, the router-id is configured for the specified VRF instance.

Use the **no** variant of this command to force OSPF to use the previous OSPF router-id behavior.

Syntax

```
router-id <ip-address>
no router-id
```

Parameter	Description
<ip-address>	Specifies the router ID in IPv4 address format.

Mode Router Configuration

Usage Configure each router with a unique router-id. In an OSPF router process that has active neighbors, a new router-id is used at the next reload or when you restart OSPF manually.

Example The following example shows a fixed router ID `10.10.10.60` for the VRF instance `red`:

```
awplus# configure terminal
awplus(config)# ip vrf red
awplus(config-router)# router-id 10.10.10.60
```

Related Commands show ip ospf

show ip vrf

show arp

Overview Use this command to display entries in the ARP routing and forwarding table—the ARP cache contains mappings of IP addresses to physical addresses for hosts. To have a dynamic entry in the ARP cache, a host must have used the ARP protocol to access another host.

For information on filtering and saving command output, see the "Getting Started with AlliedWare Plus" Feature Overview and Configuration Guide.

Syntax

```
show arp [security [interface [<interface-list>]]
show arp [statistics [detail][interface [<interface-list>]]
```

Syntax (VRF-lite)

```
show arp [global|security|vrf <vrf-name>]
```

Parameter	Description
`security`	Specify the DHCP Snooping ARP security output option.
`interface`	Specify an interface list for DHCP Snooping ARP security output.
`<interface-list>`	Specify a single Layer 3 interface name, or a range of interfaces.
`statistics`	Specify brief DHCP Snooping ARP security statistics.
`detail`	Specify detailed DHCP Snooping ARP security statistics.
`global`	When VRF-lite is configured, apply this command to the global routing and forwarding table
`vrf`	Apply this command to the specified VRF instance.
`<vrf-name>`	The VRF instance name

Mode User Exec and Privileged Exec

Usage Running this command with no additional parameters will display all entries in the ARP routing and forwarding table.

With VRF-lite configured, and no additional parameters entered, the command output displays all entries, listed by their VRF instance. By adding either a specific VRF instance or global parameter entry, you can selectively list ARP entries by their membership of a specific VRF instance.

Example To display all ARP entries in the ARP cache, use the following command:

```
awplus# show arp
```

Output Figure 32-1: Example output from the **show arp** command

```
awplus#show arp

IP Address       MAC Address     Interface       Port         Type
192.168.10.2     0015.77ad.fad8  vlan1           port1.0.1    dynamic
192.168.20.2     0015.77ad.fa48  vlan2           port1.0.2    dynamic
192.168.1.100    00d0.6b04.2a42  vlan2           port1.0.6    static
```

Example (VRF-lite) To display the dynamic ARP entries in the global routing instance, use the command:

```
awplus# show arp global
```

Output Figure 32-2: Example output from the **show arp global** command

```
awplus#show arp global

IP Address       MAC Address     Interface    Port         Type
192.168.10.2     0015.77ad.fad8  vlan1        port1.0.1    dynamic
192.168.20.2     0015.77ad.fa48  vlan2        port1.0.2    dynamic
192.168.1.100    00d0.6b04.2a42  vlan2        port1.0.8    static
```

Example (VRF-lite) To display the dynamic ARP entries for a VRF instance 'red', use the command:

```
awplus# show arp vrf red
```

Output Figure 32-3: Example output from the **show arp vrf red** command

```
awplus# show arp vrf red

[VRF: red]
  IP Address       MAC Address     Interface    Port         Type
  192.168.10.2     0015.77ad.fad8  vlan1        port1.0.1    dynamic
```

Table 1: Parameters in the output of the **show arp** command

Parameter	Meaning
IP Address	IP address of the network device this entry maps to.
MAC Address	Hardware address of the network device.
Interface	Interface over which the network device is accessed.
Port	Physical port that the network device is attached to.
Type	Whether the entry is a static or dynamic entry. Static entries are added using the arp (IP address MAC) command. Dynamic entries are learned from ARP request/reply message exchanges.
VRF	The name of the VRF instance. The VRF-lite components only display when VRF-lite is configured.

Related Commands

arp (IP address MAC)

clear arp-cache

Command changes

Version 5.4.6-2.1: VRF-lite support added.

show crypto key pubkey-chain knownhosts

Overview This command displays the list of public keys maintained in the known host database on the device.

Syntax
```
show crypto key pubkey-chain knownhosts [<1-65535>]
```

Syntax (VRF-lite)
```
show crypto key pubkey-chain knownhosts [vrf <vrf-name>|global]
[<1-65535>]
```

Parameter	Description
`global`	When VRF-lite is configured, apply the command to the global routing and forwarding table.
`vrf`	Apply the command to the specified VRF instance.
<vrf-name>	The name of the VRF instance.
<1-65535>	Key identifier for a specific key. Displays the public key of the entry if specified.

Default Display all keys.

Mode User Exec, Privileged Exec and Global Configuration

When VRF-lite is configured:

- If **vrf** is specified, this command displays the known host database from the specified VRF instance.
- If **global** is specified, this command displays the known host database from the global routing environment.
- If neither **vrf** nor **global** is specified, this command displays the known host database from the global routing environment and each configured VRF.

For more information about VRF, see the VRF Lite Feature Overview and Configuration Guide.

Examples To display public keys of known SSH servers, use the command:

```
awplus# show crypto key pubkey-chain knownhosts
```

To display the key data of the first entry in the known host data, use the command:

```
awplus# show crypto key pubkey-chain knownhosts 1
```

Output Figure 32-4: Example output from the **show crypto key public-chain knownhosts** command

```
No     Hostname         Type Fingerprint
-------------------------------------------------------------------
1      172.16.23.1      rsa  c8:33:b1:fe:6f:d3:8c:81:4e:f7:2a:aa:a5:be:df:18
2      172.16.23.10     rsa  c4:79:86:65:ee:a0:1d:a5:6a:e8:fd:1d:d3:4e:37:bd
3      5ffe:1053:ac21:ff00:0101:bcdf:ffff:0001
                        rsa1 af:4e:b4:a2:26:24:6d:65:20:32:d9:6f:32:06:ba:57
```

Table 2: Parameters in the output of the **show crypto key public-chain knownhosts** command

Parameter	Description
`No`	Number ID of the key.
`Hostname`	Host name of the known SSH server.
`Type`	The algorithm used to generate the key.
`Fingerprint`	Checksum value for the public key.

Related Commands crypto key pubkey-chain knownhosts

Command changes Version 5.4.6-2.1: VRF-lite support added.

show ip bgp cidr-only (BGP only)

Overview Use this command to display routes with non-natural network masks.

For information on filtering and saving command output, see the "Getting Started with AlliedWare Plus" Feature Overview and Configuration Guide.

Syntax
```
show ip bgp cidr-only
```

Syntax [VRF]
```
show ip bgp [global|vrf <vrf-name>] cidr-only
```

Parameter	Description
`global`	When VRF-lite is configured, apply the command to the global routing and forwarding table.
`vrf`	Apply the command to the specified VRF instance.
`<vrf-name>`	The name of the VRF instance.

Mode User Exec and Privileged Exec

Example
```
awplus# show ip bgp cidr-only
awplus# show ip bgp vrf red cidr-only
```

Output Figure 32-5: Example output from the **show ip bgp cidr-only** command

```
BGP table version is 0, local router ID is 10.10.10.50

Status codes: s suppressed, d damped, h history, p stale, *
valid, > best, i - internal

Origin codes: i - IGP, e - EGP, ? - incomplete

   Network          Next Hop            Metric LocPrf Weight Path
*> 3.3.3.0/24       10.10.10.10                              0 11 i
*> 6.6.6.0/24       0.0.0.0                              32768 i

Total number of prefixes 2
```

Command changes Version 5.4.6-2.1: VRF-lite support added.

show ip bgp community (BGP only)

Overview Use this command to display routes that match specified communities from a BGP instance within an IPv4 environment. Use the show bgp ipv6 community (BGP4+ only) command within an IPv6 environment.

For information on filtering and saving command output, see the "Getting Started with AlliedWare Plus" Feature Overview and Configuration Guide.

You may use any combination and repetition of parameters listed in the *<type>* placeholder.

Syntax `show ip bgp community [<type>] [exact-match]`

Syntax [VRF] `show ip bgp [global|vrf <vrf-name>] community [<type>] [exact-match]`

Parameter	Description	
`global`	When VRF-lite is configured, apply the command to the global routing and forwarding table.	
`vrf`	Apply the command to the specified VRF instance.	
<vrf-name>	The name of the VRF instance.	
<type>	{[*AA:NN*][local-AS][no-advertise][no-export]}	
	AA:NN	Specifies the Autonomous System (AS) community number, in AA:NN format.
	`local-AS`	Do not send outside local Autonomous Systems (well-known community).
	`no-advertise`	Do not advertise to any peer (well-known community).
	`no-export`	Do not export to next AS (well-known community).
`exact-match`	Specifies that the exact match of the communities is displayed. This optional parameter cannot be repeated.	

Mode User Exec and Privileged Exec

Examples Note that the AS numbers shown are examples only.

```
awplus# show ip bgp community 64497:64499 exact-match
awplus# show ip bgp community 64497:64499 64500:64501
exact-match
awplus# show ip bgp community 64497:64499 64500:64501
64510:64511no-advertise
awplus# show ip bgp community no-advertise
no-advertiseno-advertise exact-match
awplus# show ip bgp community no-export 64510:64511
no-advertise local-AS no-export
awplus# show ip bgp community no-export 64510:64511
no-advertise 64497:64499 64500:64501 no-export
awplus# show ip bgp community no-export 64497:64499
no-advertise local-AS no-export
awplus# show ip bgp vrf red no-export
awplus# show ip bgp global 65500:2 65500:3 exact-match
```

Related Commands set community

show bgp ipv6 community (BGP4+ only)

Command changes Version 5.4.6-2.1: VRF-lite support added.

show ip bgp community-list (BGP only)

Overview Use this command to display routes that match the given community-list from a BGP instance within an IPv4 environment. Use the show bgp ipv6 community-list (BGP4+ only) command within an IPv6 environment.

For information on filtering and saving command output, see the "Getting Started with AlliedWare Plus" Feature Overview and Configuration Guide.

Syntax
```
show ip bgp community-list <listname> [exact-match]
```

Syntax [VRF]
```
show ip bgp [global|vrf <vrf-name>] community-list <listname>
[exact-match]
```

Parameter	Description
`global`	When VRF-lite is configured, apply the command to the global routing and forwarding table.
`vrf`	Apply the command to the specified VRF instance.
`<vrf-name>`	The name of the VRF instance.
`<listname>`	Specifies the community list name.
`exact-match`	Displays only routes that have exactly the same specified communities.

Mode User Exec and Privileged Exec

Example
```
awplus# show ip bgp community-list mylist exact-match
awplus# show ip bgp vrf red community-list myCommunity
awplus# show ip bgp global community-list myExactCommunity
exact-match
```

Related Commands show bgp ipv6 community-list (BGP4+ only)

Command changes Version 5.4.6-2.1: VRF-lite support added.

show ip bgp dampening (BGP only)

Overview Use this command to show dampened routes from a BGP instance within an IPv4 environment. Use the show bgp ipv6 dampening (BGP4+ only) command within an IPv6 environment.

For information on filtering and saving command output, see the "Getting Started with AlliedWare Plus" Feature Overview and Configuration Guide.

Syntax
```
show ip bgp dampening
{dampened-paths|flap-statistics|parameters}
```

Syntax [VRF]
```
show ip bgp [global|vrf <vrf-name>] dampening
{dampened-paths|flap-statistics|parameters}
```

Parameter	Description
`global`	When VRF-lite is configured, apply the command to the global routing and forwarding table.
`vrf`	Apply the command to the specified VRF instance.
`<vrf-name>`	The name of the VRF instance.
`dampened-paths`	Display paths suppressed due to dampening.
`flap-statistics`	Display flap statistics of routes.
`parameters`	Display details of configured dampening parameters.

Mode User Exec and Privileged Exec

Usage Enable BGP dampening to maintain dampened-path information in memory.

Examples
```
awplus# show ip bgp dampening dampened-paths
awplus# show ip bgp vrf red dampening dampened-paths
awplus# show ip bgp global dampening flap-statistics
```

Output Figure 32-6: Example output from the **show ip bgp dampening** command

```
dampening 15 750 2000 60 15
 Reachability Half-Life time    : 15 min
 Reuse penalty                  : 750
 Suppress penalty               : 2000
 Max suppress time              : 60 min
 Un-reachability Half-Life time : 15 min
 Max penalty (ceil)             : 11999
 Min penalty (floor)            : 375
```

The following example output shows that the internal route (`i`), has flapped 3 times and is now categorized as history (`h`).

Figure 32-7: Example output from the **show ip bgp dampening flap-statistics** command

```
awplus# show ip bgp dampening flap-statistics
BGP table version is 1, local router ID is 30.30.30.77
Status codes: s suppressed, d damped, h history, * valid, > best, i - internal,S
Stale
Origin codes: i - IGP, e - EGP, ? - incomplete
   Network          From            Flaps  Duration  Reuse    Path
 hi1.1.1.0/24       10.100.0.62        3   00:01:20           i
```

The following example output shows a dampened route in the `1.1.1.0/24` network.

Figure 32-8: Example output from the **show ip bgp dampening dampened-path** command

```
awplus# show ip bgp dampening dampened-paths
BGP table version is 1, local router ID is 30.30.30.77
Status codes: s suppressed, d damped, h history, * valid, > best, i - internal,S
Stale
Origin codes: i - IGP, e - EGP, ? - incomplete

     Network          From            Reuse     Path
 di 1.1.1.0/24       10.100.0.62     00:35:10     i

Total number of prefixes 1
```

Related Commands show bgp ipv6 dampening (BGP4+ only)

Command changes Version 5.4.6-2.1: VRF-lite support added.

show ip bgp filter-list (BGP only)

Overview Use this command to display routes conforming to the filter-list within an IPv4 environment. Use the show bgp ipv6 filter-list (BGP4+ only) command to display routes conforming to the filter-list within an IPv6 environment

For information on filtering and saving command output, see the "Getting Started with AlliedWare Plus" Feature Overview and Configuration Guide.

Syntax
```
show ip bgp filter-list <listname>
```

Syntax [VRF]
```
show ip bgp [global|vrf <vrf-name>] filter-list <listname>
```

Parameter	Description
`global`	When VRF-lite is configured, apply the command to the global routing and forwarding table.
`vrf`	Apply the command to the specified VRF instance.
<vrf-name>	The name of the VRF instance.
<listname>	Specifies the regular-expression access list name.

Mode User Exec and Privileged Exec

Example
```
awplus# show ip bgp filter-list mylist
awplus# show ip bgp vrf red filter-list mylist
```

Related Commands show bgp ipv6 filter-list (BGP4+ only)

Command changes Version 5.4.6-2.1: VRF-lite support added.

show ip bgp inconsistent-as (BGP only)

Overview Use this command to display routes with inconsistent AS Paths within an IPv4 environment. Use the show bgp ipv6 inconsistent-as (BGP4+ only) command to display routes with inconsistent AS paths within an IPv6 environment.

For information on filtering and saving command output, see the "Getting Started with AlliedWare Plus" Feature Overview and Configuration Guide.

Syntax
```
show ip bgp inconsistent-as
```

Syntax [VRF]
```
show ip bgp [global|vrf <vrf-name>] inconsistent-as
```

Parameter	Description
`global`	When VRF-lite is configured, apply the command to the global routing and forwarding table.
`vrf`	Apply the command to the specified VRF instance.
`<vrf-name>`	The name of the VRF instance.

Mode User Exec and Privileged Exec

Example
```
awplus# show ip bgp inconsistent-as
awplus# show ip bgp global inconsistent-as
```

Related Commands show bgp ipv6 inconsistent-as (BGP4+ only)

Command changes Version 5.4.6-2.1: VRF-lite support added.

show ip bgp longer-prefixes (BGP only)

Overview Use this command to display the route of the local BGP routing table for a specific prefix with a specific mask, or for any prefix having a longer mask than the one specified.

For information on filtering and saving command output, see the "Getting Started with AlliedWare Plus" Feature Overview and Configuration Guide.

Syntax
```
show ip bgp <ip-address/m> longer-prefixes
```

Syntax [VRF]
```
show ip bgp [global|vrf <vrf-name>] <ip-address/m>
longer-prefixes
```

Parameter	Description
`global`	When VRF-lite is configured, apply the command to the global routing and forwarding table.
`vrf`	Apply the command to the specified VRF instance.
`<vrf-name>`	The name of the VRF instance.
`<ip-address/m>`	Neighbor's IP address and subnet mask, entered in the form A.B.C.D/M, where M is the subnet mask length.

Mode User Exec and Privileged Exec

Example
```
awplus# show ip bgp 10.10.0.10/24 longer-prefixes
awplus# show ip bgp vrf red 172.16.4.0/24
awplus# show ip bgp global 172.16.0.0/16 longer-prefixes
```

Command changes Version 5.4.6-2.1: VRF-lite support added.

show ip bgp prefix-list (BGP only)

Overview Use this command to display routes matching the prefix-list within an IPv4 environment. Use the show bgp ipv6 prefix-list (BGP4+ only) command to display routes matching the prefix-list within an IPv6 environment.

For information on filtering and saving command output, see the "Getting Started with AlliedWare Plus" Feature Overview and Configuration Guide.

Syntax
```
show ip bgp prefix-list <list>
```

Syntax [VRF]
```
show ip bgp [global|vrf <vrf-name>] prefix-list <list>
```

Parameter	Description
`global`	When VRF-lite is configured, apply the command to the global routing and forwarding table.
`vrf`	Apply the command to the specified VRF instance.
`<vrf-name>`	The name of the VRF instance.
`<list>`	Specifies the name of the IP prefix list.

Mode User Exec and Privileged Exec

Examples
```
awplus# show ip bgp prefix-list mylist
awplus# show ip bgp vrf red prefix-list myPrefixes
```

Related Commands show bgp ipv6 prefix-list (BGP4+ only)

Command changes Version 5.4.6-2.1: VRF-lite support added.

show ip bgp quote-regexp (BGP only)

Overview Use this command to display routes matching the AS path regular expression within an IPv4 environment. Use the show bgp ipv6 quote-regexp (BGP4+ only) command to display routes matching the AS path regular expression within an IPv6 environment.

Note that you must use quotes to enclose the regular expression with this command. Use the regular expressions listed below with the *<expression>* parameter:

Symbol	Character	Meaning
^	Caret	Used to match the beginning of the input string. When used at the beginning of a string of characters, it negates a pattern match.
$	Dollar sign	Used to match the end of the input string.
.	Period	Used to match a single character (white spaces included).
*	Asterisk	Used to match none or more sequences of a pattern.
+	Plus sign	Used to match one or more sequences of a pattern.
?	Question mark	Used to match none or one occurrence of a pattern.
_	Underscore	Used to match spaces, commas, braces, parenthesis, or the beginning and end of an input string.
[ ]	Brackets	Specifies a range of single-characters.
–	Hyphen	Separates the end points of a range.

For information on filtering and saving command output, see the "Getting Started with AlliedWare Plus" Feature Overview and Configuration Guide.

Syntax `show ip bgp quote-regexp <expression>`

Syntax [VRF] `show ip bgp [global|vrf <vrf-name>] quote-regexp <expression>`

Parameter	Description
`global`	When VRF-lite is configured, apply the command to the global routing and forwarding table.
`vrf`	Apply the command to the specified VRF instance.
<vrf-name>	The name of the VRF instance.
<expression>	Specifies a regular-expression to match the BGP AS paths.

Mode User Exec and Privileged Exec

Examples

```
awplus# show ip bgp quote-regexp myexpression
awplus# show ip bgp global quote-regexp 65550 65555
```

Related Commands

show bgp ipv6 quote-regexp (BGP4+ only)

Command changes

Version 5.4.6-2.1: VRF-lite support added.

show ip bgp regexp (BGP only)

Overview Use this command to display routes matching the AS path regular expression within an IPv4 environment. Use the show bgp ipv6 regexp (BGP4+ only) command to display routes matching the AS path regular expression within an IPv6 environment.

Use the regular expressions listed below with the <*expression*> parameter:

Symbol	Character	Meaning
^	Caret	Used to match the beginning of the input string. When used at the beginning of a string of characters, it negates a pattern match.
$	Dollar sign	Used to match the end of the input string.
.	Period	Used to match a single character (white spaces included).
*	Asterisk	Used to match none or more sequences of a pattern.
+	Plus sign	Used to match one or more sequences of a pattern.
?	Question mark	Used to match none or one occurrence of a pattern.
_	Underscore	Used to match spaces, commas, braces, parenthesis, or the beginning and end of an input string.
[ ]	Brackets	Specifies a range of single-characters.
-	Hyphen	Separates the end points of a range.

For information on filtering and saving command output, see the "Getting Started with AlliedWare Plus" Feature Overview and Configuration Guide.

Syntax
```
show ip bgp regexp <expression>
```

Syntax [VRF]
```
show ip bgp [global|vrf <vrf-name>] regexp <expression>
```

Parameter	Description
global	When VRF-lite is configured, apply the command to the global routing and forwarding table.
vrf	Apply the command to the specified VRF instance.
<*vrf-name*>	The name of the VRF instance.
<*expression*>	Specifies a regular-expression to match the BGP AS paths.

Mode User Exec and Privileged Exec

Examples

```
awplus# show ip bgp regexp myexpression
awplus# show ip bgp vrf red regexp 65550 65555
```

Related Commands

show bgp ipv6 regexp (BGP4+ only)

Command changes

Version 5.4.6-2.1: VRF-lite support added.

show ip bgp route-map (BGP only)

Overview Use this command to display BGP routes that match the specified route-map within an IPv4 environment. Use the show bgp ipv6 route-map (BGP4+ only) command to display BGP4+ routes that match the specified route-map within an IPv6 environment.

For information on filtering and saving command output, see the "Getting Started with AlliedWare Plus" Feature Overview and Configuration Guide.

Syntax `show ip bgp route-map <route-map>`

Syntax [VRF] `show ip bgp [global|vrf <vrf-name>] route-map <route-map>`

Parameter	Description
`global`	When VRF-lite is configured, apply the command to the global routing and forwarding table.
`vrf`	Apply the command to the specified VRF instance.
<vrf-name>	The name of the VRF instance.
<route-map>	Specifies a route-map that is matched.

Mode User Exec and Privileged Exec

Examples To show routes that match the route-map `myRouteMap` for the global routing instance, use the command:

```
awplus# show ip bgp global route-map myRouteMap
```

To show routes that match the route-map `myRouteMap`, use the command:

```
awplus# show ip bgp route-map myRouteMap
```

Related Commands show bgp ipv6 route-map (BGP4+ only)

Command changes Version 5.4.6-2.1: VRF-lite support added.

show ip bgp summary (BGP only)

Overview Use this command to display a summary of a BGP neighbor status within an IPv4 environment. Use the show bgp ipv6 summary (BGP4+ only) command to display a summary of BGP4+ neighbors.

For information on filtering and saving command output, see the "Getting Started with AlliedWare Plus" Feature Overview and Configuration Guide.

Syntax
```
show ip bgp summary
```

Syntax [VRF]
```
show ip bgp [global|vrf <vrf-name>] summary
```

Parameter	Description
`global`	When VRF-lite is configured, apply the command to the global routing and forwarding table.
`vrf`	Apply the command to the specified VRF instance.
`<vrf-name>`	The name of the VRF instance.

Mode User Exec and Privileged Exec

Examples
```
awplus# show ip bgp summary
awplus# show ip bgp vrf red summary
```

Output Figure 32-9: Example output from the **show ip bgp summary** command

```
awplus>show ip bgp summary

BGP router identifier 1.0.0.1, local AS number 65541
BGP table version is 12
4 BGP AS-PATH entries
0 BGP community entries

Neighbor        V         AS   MsgRc  MsgSnt TblVer InOutQ Up/Down   State/PfxRcd
192.168.3.2     4      65544      20      24     11 0/0    00:07:19          1
192.168.4.2     4      65545       0       0      0 0/0    never         Active
192.168.11.2    4      65542      34      40      0 0/0    00:00:04      Active
192.168.21.2    4      65543      29      32     11 0/0    00:07:03         13

Number of neighbors 4
```

The Up/Down column in this output is a timer that shows:

- "never" if the peer session has never been established
- The up time, if the peer session is currently up
- The down time, if the peer session is currently down.

In the example above, the session with 192.168.11.2 has been down for 4 seconds, and the session with 192.168.4.2 has never been established.

Related Commands show bgp ipv6 summary (BGP4+ only)

Command changes Version 5.4.6-2.1: VRF-lite support added.

show ip interface vrf

Overview Use this command to display protocol and status information about configured interfaces and their assigned IP addresses in VRF instances.

For information on filtering and saving command output, see the "Getting Started with AlliedWare Plus" Feature Overview and Configuration Guide.

Syntax

```
show ip interface [vrf <vrf-name>|global]
```

Parameter	Description
`vrf`	A VRF instance.
`<vrf-name>`	The name of a specific VRF instance.
`global`	The global routing and forwarding table.

Mode User Exec and Privileged Exec

Examples To display all interfaces and IP addresses associated with a VRF instance 'red', use the command:

```
awplus# show ip interface vrf red
```

Output Figure 32-10: Example output from **show ip interface vrf red**

```
[VRF: red]
Interface            IP-Address         Status       Protocol
lo1                  unassigned         admin up     running
vlan1                192.168.10.1/24    admin up     running
```

Example To display all interfaces and IP addresses associated with all VRF instances, use the command:

```
awplus# show ip interface
```

Output Figure 32-11: Example output from the **show ip interface** with VRF-lite configured

```
Interface               IP-Address          Status          Protocol
eth0                    unassigned          admin up        down
lo                      unassigned          admin up        running
vlan1                   192.168.1.1/24      admin up        running
vlan4                   172.30.4.43/24      admin up        down

[VRF: red]
Interface               IP-Address          Status
Protocol
lo1                     unassigned          admin up        running

[VRF: blue]
Interface               IP-Address          Status
Protocol
lo2                     unassigned          admin up        running
```

Command changes Version 5.4.6-2.1: VRF-lite support added.

show ip rip vrf database

Overview Use this command to display information about the RIP database that is associated with a specific VRF instance.

Entering this command with the **full** option included, will display information about the full RIP database (including sub-optimal routes) associated with a specific VRF instance.

For information on filtering and saving command output, see the "Getting Started with AlliedWare Plus" Feature Overview and Configuration Guide.

Syntax

```
show ip rip {vrf <vrf-name>|global} database [full]
```

Parameter	Description
`vrf`	Specific VRF instance.
`<vrf-name>`	The name of the VRF instance.
`global`	The global routing and forwarding table.
`full`	Specify the full RIP database including sub-optimal RIP routes.

Mode User Exec and Privileged Exec

Example To display information about the RIP database associated with a VRF instance 'blue', use the command:

```
awplus# show ip rip vrf blue database
```

Output Figure 32-12: Example output from the **show ip rip vrf blue database** command

```
Codes: R - RIP, Rc - RIP connected, Rs - RIP static
       C - Connected, S - Static, O - OSPF, B - BGP

   Network            Next Hop         Metric From            If       Time
Rc 192.168.30.0/24                         1                  vlan3
R  192.168.45.0/24    192.168.30.1         2 192.168.30.1     vlan3    02:46
```

Related Commands show ip rip

Command changes Version 5.4.6-2.1: VRF-lite support added.

show ip rip vrf interface

Overview Use this command to display information about the RIP interfaces that are associated with a specific VRF instance.

For information on filtering and saving command output, see the "Getting Started with AlliedWare Plus" Feature Overview and Configuration Guide.

Syntax

```
show ip rip {vrf <vrf-name>|global} interface
[<interface-name>]
```

Parameter	Description
`vrf`	Specific VRF instance.
`<vrf-name>`	The name of the VRF instance.
`global`	The global routing and forwarding table.
`<interface-name>`	The IP RIP interface (VLAN).

Mode User Exec and Privileged Exec

Example To display information about the RIP database associated with a VRF instance 'blue', use the command:

```
awplus# show ip rip vrf blue interface
```

Output Figure 32-13: Example output from **show ip rip vrf blue interface vlan3**

```
Codes: R - RIP, Rc - RIP connected, Rs - RIP static
       C - Connected, S - Static, O - OSPF, B - BGP

   Network            Next Hop         Metric From            If       Time
Rc 192.168.30.0/24                           1                vlan3
R  192.168.45.0/24    192.168.30.1 2   192.168.30.1           vlan3    02:46
```

NOTE: *The Time parameter operates as follows:*

- RIP updates occur approximately every 30 seconds.
- Each update resets a count-down timer to 180 seconds (3 minutes).
- The Time parameter displays the count-down from the last reset.

Related Commands show ip rip

Command changes Version 5.4.6-2.1: VRF-lite support added.

show ip route

Overview Use this command to display routing entries in the FIB (Forwarding Information Base). The FIB contains the best routes to a destination, and your device uses these routes when forwarding traffic. You can display a subset of the entries in the FIB based on protocol.

To modify the lines displayed, use the | (output modifier token); to save the output to a file, use the > output redirection token.

VRF-lite If VRF-lite is configured, you can display routing entries in the FIB associated with either the global routing domain or a named VRF.

Syntax
```
show ip route [bgp|connected|ospf|rip|static|<ip-addr>|
<ip-addr/prefix-length>]
```

Syntax (VRF-lite)
```
show ip route {vrf <vrf-name>|global}
[bgp|connected|ospf|rip|static]
```

Parameter	Description
`global`	If VRF-lite is configured, apply the command to the global routing and forwarding table.
`vrf`	Apply the command to the specified VRF instance.
<vrf-name>	The name of the VRF instance.
`bgp`	Displays only the routes learned from BGP.
`connected`	Displays only the routes learned from connected interfaces.
`ospf`	Displays only the routes learned from OSPF.
`rip`	Displays only the routes learned from RIP.
`static`	Displays only the static routes you have configured.
<ip-addr>	Displays the routes for the specified address. Enter an IPv4 address.
<ip-addr/prefix-length>	Displays the routes for the specified network. Enter an IPv4 address and prefix length.

Mode User Exec and Privileged Exec

Example To display the static routes in the FIB, use the command:

```
awplus# show ip route static
```

To display the OSPF routes in the FIB, use the command:

```
awplus# show ip route ospf
```

Example (VRF-lite) To display all routing entries in the FIB associated with a VRF instance `red`, use the command:

```
awplus# show ip route vrf red
```

Output Each entry in the output from this command has a code preceding it, indicating the source of the routing entry. For example, O indicates OSPF as the origin of the route. The first few lines of the output list the possible codes that may be seen with the route entries.

Typically, route entries are composed of the following elements:

- code
- a second label indicating the sub-type of the route
- network or host IP address
- administrative distance and metric
- next hop IP address
- outgoing interface name
- time since route entry was added

Figure 32-14: Example output from the **show ip route** command

```
Codes: C - connected, S - static, R - RIP, B - BGP
       O - OSPF, IA - OSPF inter area
       N1 - OSPF NSSA external type 1, N2 - OSPF NSSA external type 2
       E1 - OSPF external type 1, E2 - OSPF external type 2
       * - candidate default

O       10.10.37.0/24 [110/11] via 10.10.31.16, vlan2, 00:20:54
C       3.3.3.0/24 is directly connected, vlan1
C       10.10.31.0/24 is directly connected, vlan2
C       10.70.0.0/24 is directly connected, vlan4
O E2    14.5.1.0/24 [110/20] via 10.10.31.16, vlan2, 00:18:56
C       33.33.33.33/32 is directly connected, lo
```

Connected Route The connected route entry consists of:

```
C       10.10.31.0/24 is directly connected, vlan2
```

This route entry denotes:

- Route entries for network `10.10.31.0/24` are derived from the IP address of local interface `vlan2`.
- These routes are marked as Connected routes `(C)` and always preferred over routes for the same network learned from other routing protocols.

OSPF Route The OSPF route entry consists of:

```
O       10.10.37.0/24 [110/11] via 10.10.31.16, vlan2, 00:20:54
```

This route entry denotes:

- This route in the network `10.10.37.0/24` was added by OSPF.
- This route has an administrative distance of 110 and metric/cost of 11.
- This route is reachable via next hop `10.10.31.16`.
- The outgoing local interface for this route is `vlan2`.
- This route was added 20 minutes and 54 seconds ago.

OSPF External Route

The OSPF external route entry consists of:

```
O E2    14.5.1.0/24 [110/20] via 10.10.31.16, vlan2, 00:18:56
```

This route entry denotes that this route is the same as the other OSPF route explained above; the main difference is that it is a Type 2 External OSPF route.

Related Commands

ip route

maximum-paths

show ip route database

Command changes

Version 5.4.6-2.1: VRF-lite support added.

show ip route database

Overview This command displays the routing entries in the RIB (Routing Information Base).

When multiple entries are available for the same prefix, RIB uses the routes' administrative distances to choose the best route. All best routes are entered into the FIB (Forwarding Information Base). To view the routes in the FIB, use the show ip route command.

To modify the lines displayed, use the | (output modifier token); to save the output to a file, use the > output redirection token.

Syntax
```
show ip route database [bgp|connected|ospf|rip|static]
```

Syntax (VRF-lite)
```
show ip route [vrf <vrf-name>|global] database
[bgp|connected|ospf|rip|static]
```

Parameter	Description
`global`	If VRF-lite is configured, apply the command to the global routing and forwarding table.
`vrf`	Apply the command to the specified VRF instance.
<vrf-name>	The name of the VRF instance.
`bgp`	Displays only the routes learned from BGP.
`connected`	Displays only the routes learned from connected interfaces.
`ospf`	Displays only the routes learned from OSPF.
`rip`	Displays only the routes learned from RIP.
`static`	Displays only the static routes you have configured.

Mode User Exec and Privileged Exec

Example To display the static routes in the RIB, use the command:

```
awplus# show ip route database static
```

Output Figure 32-15: Example output from the **show ip route database** command

```
Codes: C - connected, S - static, R - RIP, B - BGP
       O - OSPF, IA - OSPF inter area
       N1 - OSPF NSSA external type 1, N2 - OSPF NSSA external type 2
       E1 - OSPF external type 1, E2 - OSPF external type 2
              > - selected route, * - FIB route, p - stale info

O    *> 9.9.9.9/32 [110/31] via 10.10.31.16, vlan2, 00:19:21
O       10.10.31.0/24 [110/1] is directly connected, vlan2, 00:28:20
C    *> 10.10.31.0/24 is directly connected, vlan2
S    *> 10.10.34.0/24 [1/0] via 10.10.31.16, vlan2
O       10.10.34.0/24 [110/31] via 10.10.31.16, vlan2, 00:21:19
O    *> 10.10.37.0/24 [110/11] via 10.10.31.16, vlan2, 00:21:19
C    *> 10.30.0.0/24 is directly connected, vlan6
S    *> 11.22.11.0/24 [1/0] via 10.10.31.16, vlan2
O E2 *> 14.5.1.0/24 [110/20] via 10.10.31.16,vlan2, 00:19:21
O       16.16.16.16/32 [110/11] via 10.10.31.16, vlan2, 00:21:19
S    *> 16.16.16.16/32 [1/0] via 10.10.31.16, vlan2
O    *> 17.17.17.17/32 [110/31] via 10.10.31.16, vlan2, 00:21:19
C    *> 45.45.45.45/32 is directly connected, lo
O    *> 55.55.55.55/32 [110/21] via 10.10.31.16, vlan2, 00:21:19
C    *> 127.0.0.0/8 is directly connected, lo
```

Example (VRF-lite) To display all routing entries in the RIB associated with a VRF instance `red`, use the command:

```
awplus# show ip route vrf red database
```

Output Figure 32-16: Example output from the **show ip route vrf red database** command

```
[VRF: red]
Codes: C - connected, S - static, R - RIP, B - BGP
       O - OSPF, IA - OSPF inter area
       N1 - OSPF NSSA external type 1, N2 - OSPF NSSA external type 2
       E1 - OSPF external type 1, E2 - OSPF external type 2
              > - selected route, * - FIB route, p - stale info

O       192.168.10.0/24 [110/1] is directly connected, vlan1, 06:45:51
C    *> 192.168.10.0/24 is directly connected, vlan1
B     > 192.168.33.0/24 [20/0] via 192.168.30.3, 06:45:52
O E2 *> 192.168.110.0/24 [110/20] via 192.168.10.2, vlan1, 06:45:00
O E2 *> 192.168.111.0/24 [110/20] via 192.168.10.2, vlan1, 06:45:00
```

The routes added to the FIB are marked with a `*`. When multiple routes are available for the same prefix, the best route is indicated with the > symbol. All unselected routes have neither the `*` nor the > symbol.

```
S    *> 10.10.34.0/24 [1/0] via 10.10.31.16, vlan2
O       10.10.34.0/24 [110/31] via 10.10.31.16, vlan2, 00:21:19
```

These route entries denote:

- The same prefix was learned from OSPF and from static route configuration.

- Since this static route has a lower administrative distance than the OSPF route (110), the static route (1) is selected and installed in the FIB.

If the static route becomes unavailable, then the device automatically selects the OSPF route and installs it in the FIB.

Related Commands

maximum-paths

show ip route

Command changes

Version 5.4.6-2.1: VRF-lite support added.

show ip route summary

Overview This command displays a summary of the current RIB (Routing Information Base) entries.

To modify the lines displayed, use the | (output modifier token); to save the output to a file, use the > output redirection token.

Syntax
```
show ip route summary
```

Syntax (VRF-lite)
```
show ip route summary [vrf <vrf-name>|global]
```

Parameter	Description
`vrf`	Specific VRF instance.
`<vrf-name>`	The name of the VRF instance.
`global`	The global routing and forwarding table.

Mode User Exec and Privileged Exec

Example To display a summary of the current RIB entries, use the command:

```
awplus# show ip route summary
```

Output Figure 32-17: Example output from the **show ip route summary** command

```
IP routing table name is Default-IP-Routing-Table(0)
IP routing table maximum-paths is 4
Route Source    Networks
connected       5
ospf            2
Total           8
```

Example (VRF-lite) To display a summary of the current RIB entries associated with a VRF instance red, use the command:

```
awplus# show ip route summary vrf red
```

Output Figure 32-18: Example output from the **show ip route summary vrf red** command

```
IP routing table name is Default-IP-Routing-Table(0)
IP routing table maximum-paths is 4
Route Source    Networks
connected       1
Total           1
FIB             0

[VRF: red]
Route Source    Networks
connected       1
ospf            2
Total           3
```

Related Commands

show ip route

show ip route database

Command changes

Version 5.4.6-2.1: VRF-lite support added.

show ip vrf

Overview This command displays brief configurations for a specific VRF instance.

Syntax

```
show ip vrf <vrf-name>
```

Parameter	Description
<vrf-name>	The name of the VRF instance.

Mode User Exec and Privileged Exec

Example To display brief information for the VRF instance red, use the command:

```
awplus# show ip vrf red
```

Output Figure 32-19: Example output from the show ip vrf red command

```
Name                    Default RD          Interfaces
red                     500:1               lo1, vlan1
```

Related Commands show ip vrf interface

Command changes Version 5.4.6-2.1: VRF-lite support added.

show ip vrf detail

Overview This command displays the detailed configuration for a specific VRF instance.

Syntax

```
show ip vrf detail <vrf-name>
```

Parameter	Description
<vrf-name>	The name of the VRF instance.

Mode User Exec and Privileged Exec

Example To display the detailed information for all VRF instances, use the command:

```
awplus# show ip vrf detail
```

Output Figure 32-20: Example output from the **show ip detail** command, for all VRF instances

```
VRF blue; Description: VRF for customer blue
FIB ID 3; Router ID: 192.168.30.1 (automatic)
Default RD 500:3
  Interfaces:
    lo3, vlan3
  Export route-target communities
    RT: 500:3
  Import route-target communities
    RT: 500:4
  Import route-map: blue45
  No export route-map

VRF red
FIB ID 1; Router ID: 192.168.10.1 (automatic)
Default RD 500:1
  Interfaces:
    lo1, vlan1
  Export route-target communities
    RT: 500:1
  Import route-target communities
    RT: 500:1
  Import route-map: red43
  No export route-map
```

Related Commands show ip vrf

Command changes Version 5.4.6-2.1: VRF-lite support added.

show ip vrf interface

Overview This command displays protocol, operational status, and address information, for interfaces existing within either a specified VRF instance, or all VRF instances.

Syntax

```
show ip vrf interface <vrf-name>
```

Parameter	Description
<vrf-name>	The name of the VRF instance.

Mode User Exec and Privileged Exec

Example To display all interfaces and IP addresses associated with all VRF instances, use the command:

```
awplus# show ip vrf interface
```

Output Figure 32-21: Example output from the **show ip vrf interface** command

```
Interface            IP-Address         Status          Protocol   Vrf
lo1                  unassigned         admin up        running    red
lo2                  unassigned         admin up        running    green
vlan1                192.168.10.1/24    admin up        running    red
vlan2                192.168.20.1/24    admin up        running    green
```

Example To display all interfaces and IP addresses associated with the VRF instance `red`, use the command:

```
awplus# show ip vrf interface red
```

Output Figure 32-22: Example output from the **show ip vrf interface red** command

```
Interface            IP-Address         Status          Protocol   Vrf
lo1                  unassigned         admin up        running    red
vlan1                192.168.10.1/24    admin up        running    red
```

Related Commands show ip vrf

Command changes Version 5.4.6-2.1: VRF-lite support added.

show running-config vrf

Overview This command displays the running system VRF-related configurations for all VRF instances.

Syntax
```
show running-config vrf
```

Mode Privileged Exec

Example To display the running system VRF-related configurations, use the command:

```
awplus# show running-config vrf
```

Output Figure 32-23: Example output from the **show running config vrf** command

```
ip vrf red
rd 500:1
route-target export 500:1
route-target export 500:4
import map red 43
!
```

Related Commands show ip vrf

ssh

Overview This command initiates a Secure Shell connection to a remote SSH server.

If the server requests a password for the user login, the user needs to type in the correct password on "Password:" prompt.

SSH client identifies the remote SSH server by its public key registered on the client device. If the server identification is changed, server verification fails. If the public key of the server has been changed, the public key of the server must be explicitly added to the known host database.

NOTE: *Note that a hostname specified with SSH cannot begin with a hyphen (-) character.*

Syntax

```
ssh [ip|ipv6][{[user <username>]|[port <1-65535>]|[version
{1|2}]}] <hostname> [<line>]
```

Syntax (VRF-lite)

```
ssh [vrf <vrf-name>] [ip|ipv6][{[user <username>]|[port
<1-65535>]|[version {1|2}]}] <hostname> [<line>]
```

Parameter	Description
`vrf`	Apply the command to the specified VRF instance.
<vrf-name>	The name of the VRF instance.
`ip`	Specify IPv4 SSH.
`ipv6`	Specify IPv6 SSH.
`user`	Login user. If user is specified, the username is used for login to the remote SSH server when user authentication is required. Otherwise the current user name is used.
	<username> User name to login on the remote server.
`port`	SSH server port. If port is specified, the SSH client connects to the remote SSH server with the specified TCP port. Other- wise, the client port configured by "ssh client" command or the default TCP port (22) is used.
	<1-65535> TCP port.
`version`	SSH client version. If version is specified, the SSH client supports only the specified SSH version. By default, SSH client uses SSHv2 first. If the server does not support SSHv2, it will try SSHv1. The default version can be configured by "ssh client" command.
	`1` Use SSH version 1.
	`2` Use SSH version 2.

Parameter	Description
<hostname>	IPv4/IPv6 address or hostname of a remote server. The address is in the format A.B.C.D for an IPv4 address, or in the format X:X::X:X for an IPv6 address. Note that a hostname specified with SSH cannot begin with a hyphen (-) character.
<line>	A command to execute on the remote server. If a command is specified, the command is executed on the remote SSH server and the session is disconnected when the remote command finishes.

Mode User Exec and Privileged Exec

Examples To login to the remote SSH server at 192.0.2.5, use the command:

```
awplus# ssh ip 192.0.2.5
```

To login to the remote SSH server at 192.0.2.5 as user “manager”, use the command:

```
awplus# ssh ip user manager 192.0.2.5
```

To login to the remote SSH server at 192.0.2.5 that is listening TCP port 2000, use the command:

```
awplus# ssh port 2000 192.0.2.5
```

To login to the remote SSH server with example_host using IPv6 session, use the command:

```
awplus# ssh ipv6 example_host
```

To run the **cmd** command on the remote SSH server at 192.0.2.5, use the command:

```
awplus# ssh ip 192.0.2.5 cmd
```

Example (VRF-lite) To login to the remote SSH server at 192.168.1.1 on VRF “red”, use the command:

```
awplus# ssh vrf red 192.168.1.1
```

Related Commands

crypto key generate userkey

crypto key pubkey-chain knownhosts

debug ssh client

ssh client

Command changes Version 5.4.6-2.1: VRF-lite support added.

tcpdump

Overview Use this command to start a tcpdump, which gives the same output as the Unix-like **tcpdump** command to display TCP/IP traffic. Press `<ctrl> + c` to stop a running tcpdump.

Syntax
```
tcpdump <line>
```

Syntax (VRF-lite)
```
tcpdump [vrf <vrf-name>] <line>
```

Parameter	Description
<line>	Specify the dump options. For more information on the options for this placeholder see http://www.tcpdump.org/tcpdump_man.html
`vrf`	Apply the command to the specified VRF instance.
<vrf-name>	The name of the VRF instance.

Mode Privileged Exec

Example To start a tcpdump running to capture IP packets, enter the command:

```
awplus# tcpdump ip
```

Example (VRF-lite) To start a tcpdump on interface vlan2 associated with a VRF instance red, enter the command:

```
awplus# tcpdump vrf red vlan2
```

Output Figure 32-24: Example output from the **tcpdump** command

```
03:40:33.221337 IP 192.168.1.1 > 224.0.0.13: PIMv2, Hello,
length: 34
1 packets captured
2 packets received by filter
0 packets dropped by kernel
```

Related Commands debug ip packet interface

Command changes Version 5.4.6-2.1: VRF-lite support added.

telnet

Overview Use this command to open a telnet session to a remote device.

Syntax
```
telnet {<hostname>|[ip] <ipv4-addr>|[ipv6] <ipv6-addr>}
[<port>]
```

Syntax (VRF-lite)
```
telnet [vrf <vrf-name>] {<hostname>|[ip] <ipv4-addr>|[ipv6]
<ipv6-addr>} [<port>]
```

Parameter	Description
`vrf`	Apply this command to a VRF instance.
<vrf-name>	The name of the VRF instance.
<hostname>	The host name of the remote system.
`ip`	Keyword used to specify the IPv4 address or host name of a remote system.
<ipv4-addr>	An IPv4 address of the remote system.
`ipv6`	Keyword used to specify the IPv6 address of a remote system
<ipv6-addr>	Placeholder for an IPv6 address in the format `x:x::x:x`, for example, `2001:db8::8a2e:7334`
<port>	Specify a TCP port number (well known ports are in the range 1-1023, registered ports are 1024-49151, and private ports are 49152-65535).

Mode User Exec and Privileged Exec

Examples To connect to TCP port 2602 on the device at 10.2.2.2, use the command:

```
awplus# telnet 10.2.2.2 2602
```

To connect to the telnet server `host.example`, use the command:

```
awplus# telnet host.example
```

To connect to the telnet server `host.example` on TCP port `100`, use the command:

```
awplus# telnet host.example 100
```

Example (VRF-lite) To open a telnet session to a remote host `192.168.0.1` associated with VRF instance `red`, use the command:

```
awplus# telnet vrf red ip 192.168.0.1
```

Command changes Version 5.4.6-2.1: VRF-lite support added.

timers (RIP)

Overview Use this command to adjust routing network timers.

Use the **no** variant of this command to restore the defaults.

Syntax

```
timers basic <update> <timeout> <garbage>
no timers basic
```

Parameter	Description
<update>	<5-2147483647> Specifies the period at which RIP route update packets are transmitted. The default is 30 seconds.
<timeout>	<5-2147483647> Specifies the routing information timeout timer in seconds. The default is 180 seconds. After this interval has elapsed and no updates for a route are received, the route is declared invalid.
<garbage>	<5-2147483647> Specifies the routing garbage collection timer in seconds. The default is 120 seconds.

Default Enabled

Mode RIP Router Configuration or RIP Router Address Family Configuration for a VRF instance.

Usage This command adjusts the RIP timing parameters.

The update timer is the time between sending out updates, that contain the complete routing table, to every neighboring router.

If an update for a given route has not been seen for the time specified by the timeout parameter, that route is no longer valid. However, it is retained in the routing table for a short time, with metric 16, so that neighbors are notified that the route has been dropped.

When the time specified by the garbage parameter expires the metric 16 route is finally removed from the routing table. Until the garbage time expires, the route is included in all updates sent by the router.

All the routers in the network must have the same timers to ensure the smooth operation of RIP throughout the network.

Examples To set the update timer to 30, the routing information timeout timer to 180, and the routing garbage collection timer to 120, use the following command:

```
awplus# configure terminal
awplus(config)# router rip
awplus(config-router)# timers basic 30 180 120
```

To set the update timer to 30, the routing information timeout timer to 180, and the routing garbage collection timer to 120 with VRF, use the following command:

```
awplus# configure terminal
awplus(config)# router rip
awplus(config-router)# address-family ipv4 vrf blue
awplus(config-router-af)# timers basic 30 180 120
```

Command changes

Version 5.4.6-2.1: VRF-lite support added.

traceroute

Overview Use this command to trace the route to the specified IPv4 host.

Syntax
```
traceroute {<ip-addr>|<hostname>}
```

Syntax (VRF-lite)
```
traceroute [vrf <vrf-name>] {<ip-addr>|<hostname>}
```

Parameter	Description
<ip-addr>	The destination IPv4 address. The IPv4 address uses the format A.B.C.D.
<hostname>	The destination hostname.
`vrf`	Apply the command to the specified VRF instance.
<vrf-name>	The name of the VRF instance.

Mode User Exec and Privileged Exec

Example
```
awplus# traceroute 10.10.0.5
```

Example (VRF-lite)
```
awplus# traceroute vrf red 192.168.0.1
```

Command changes Version 5.4.6-2.1: VRF-lite support added.

version (RIP)

Overview Use this command to specify a RIP version used globally by the router.

If VRF-lite is configured, you can specify a RIP version either globally, or for a particular VRF instance.

Use the **no** variant of this command to restore the default version.

Syntax

```
version {1|2}
no version
```

Parameter	Description
1|2	Specifies the version of RIP processing.

Default Version 2

Mode RIP Router Configuration or RIP Router Address Family Configuration for a VRF instance.

Usage RIP can be run in version 1 or version 2 mode. Version 2 has more features than version 1; in particular RIP version 2 supports authentication and classless routing. Once the RIP version is set, RIP packets of that version will be received and sent on all the RIP-enabled interfaces.

Setting the version command has no impact on receiving updates, only on sending them. The ip rip send version command overrides the value set by the version (RIP) command on an interface-specific basis. The ip rip receive version command allows you to configure a specific interface to accept only packets of the specified RIP version. The ip rip receive version command and the ip rip send version command override the value set by this command.

Examples To specify a RIP version, use the following commands:

```
awplus# configure terminal
awplus(config)# router rip
awplus(config-router)# version 1
```

To specify a RIP version with VRF, use the following commands:

```
awplus# configure terminal
awplus(config)# router rip
awplus(config-router)# address-family ipv4 vrf blue
awplus(config-router-af)# version 1
```

Related Commands

ip rip receive version

ip rip send version

show running-config

Command changes Version 5.4.6-2.1: VRF-lite support added.

Part 4: Multicast Applications

33 IGMP and IGMP Snooping Commands

Introduction

Overview

Devices running AlliedWare Plus use IGMP (Internet Group Management Protocol) and MLD (Multicast Listener Discovery) to track which multicast groups their clients belong to. This enables them to send the correct multimedia streams to the correct destinations. IGMP is used for IPv4 multicasting, and MLD is used for IPv6 multicasting.

This chapter describes the commands to configure IGMP Querier behaviour and selection, IGMP Snooping and IGMP Proxy.

Command List

- "clear ip igmp" on page 1548
- "clear ip igmp group" on page 1549
- "clear ip igmp interface" on page 1550
- "debug igmp" on page 1551
- "ip igmp" on page 1552
- "ip igmp flood specific-query" on page 1553
- "ip igmp last-member-query-count" on page 1554
- "ip igmp last-member-query-interval" on page 1555
- "ip igmp maximum-groups" on page 1556
- "ip igmp mroute-proxy" on page 1558
- "ip igmp proxy-service" on page 1559
- "ip igmp querier-timeout" on page 1560
- "ip igmp query-holdtime" on page 1561
- "ip igmp query-interval" on page 1563
- "ip igmp query-max-response-time" on page 1565
- "ip igmp ra-option" on page 1567

- "ip igmp robustness-variable" on page 1568
- "ip igmp snooping" on page 1569
- "ip igmp snooping fast-leave" on page 1570
- "ip igmp snooping mrouter" on page 1571
- "ip igmp snooping querier" on page 1572
- "ip igmp snooping report-suppression" on page 1573
- "ip igmp snooping routermode" on page 1574
- "ip igmp snooping source-timeout" on page 1576
- "ip igmp snooping tcn query solicit" on page 1577
- "ip igmp source-address-check" on page 1579
- "ip igmp startup-query-count" on page 1580
- "ip igmp startup-query-interval" on page 1581
- "ip igmp trusted" on page 1582
- "ip igmp version" on page 1583
- "show debugging igmp" on page 1584
- "show ip igmp groups" on page 1585
- "show ip igmp interface" on page 1587
- "show ip igmp proxy" on page 1589
- "show ip igmp snooping mrouter" on page 1590
- "show ip igmp snooping routermode" on page 1591
- "show ip igmp snooping source-timeout" on page 1592
- "show ip igmp snooping statistics" on page 1593
- "undebug igmp" on page 1595

clear ip igmp

Overview Use this command to clear all IGMP group membership records on all VLAN interfaces.

Syntax
```
clear ip igmp
```

Mode Privileged Exec

Example
```
awplus# clear ip igmp
```

Related Commands
clear ip igmp group

clear ip igmp interface

show ip igmp interface

show running-config

clear ip igmp group

Overview Use this command to clear IGMP group membership records for a specific group on either all interfaces, a single interface, or for a range of interfaces.

Syntax

```
clear ip igmp group *
clear ip igmp group <ip-address> <interface>
```

Parameter	Description
*	Clears all groups on all interfaces. This has the same effect as the **clear ip igmp** command.
<ip-address>	Specifies the group whose membership records will be cleared from all interfaces, entered in the form A.B.C.D.
<interface>	Specifies the name of the interface; all groups learned on this interface are deleted.

Mode Privileged Exec

Usage This command applies to groups learned by IGMP or IGMP Snooping.

In addition to the group, an interface can be specified. Specifying this will mean that only entries with the group learned on the interface will be deleted.

Examples To delete all group records, use the command:

```
awplus# clear ip igmp group *
```

To delete records for 224.1.1.1 on vlan1, use the command:

```
awplus# clear ip igmp group 224.1.1.1 vlan1
```

Related Commands

clear ip igmp

clear ip igmp interface

show ip igmp interface

show running-config

clear ip igmp interface

Overview Use this command to clear IGMP group membership records on a particular interface.

Syntax

```
clear ip igmp interface <interface>
```

Parameter	Description
<interface>	Specifies the name of the interface. All groups learned on this interface are deleted.

Mode Privileged Exec

Usage This command applies to interfaces configured for IGMP or IGMP Snooping.

Example To delete records for vlan1, use the command:

```
awplus# clear ip igmp interface vlan1
```

Related Commands

clear ip igmp

clear ip igmp group

show ip igmp interface

show running-config

debug igmp

Overview Use this command to enable debugging of either all IGMP or a specific component of IGMP.

Use the **no** variant of this command to disable all IGMP debugging, or debugging of a specific component of IGMP.

Syntax

```
debug igmp {all|decode|encode|events|fsm|tib}
no debug igmp {all|decode|encode|events|fsm|tib}
```

Parameter	Description
`all`	Enable or disable all debug options for IGMP
`decode`	Debug of IGMP packets that have been received
`encode`	Debug of IGMP packets that have been sent
`events`	Debug IGMP events
`fsm`	Debug IGMP Finite State Machine (FSM)
`tib`	Debug IGMP Tree Information Base (TIB)

Modes Privileged Exec and Global Configuration

Example

```
awplus# configure terminal
awplus(config)# debug igmp all
```

Related Commands show debugging igmp

undebug igmp

ip igmp

Overview Use this command to enable IGMP on an interface. The command configures the device as an IGMP querier.

Use the **no** variant of this command to return all IGMP related configuration to the default on this interface.

Syntax

```
ip igmp
no ip igmp
```

Default Disabled

Mode Interface Configuration for a VLAN or Eth interface.

Usage An IP address must be assigned to the interface first, before this command will work.

Example To specify an interface as an IGMP querier, use the commands:

```
awplus# configure terminal
awplus(config)# interface vlan2
awplus(config-if)# ip igmp
```

Validation Commands show ip igmp interface

show running-config

ip igmp flood specific-query

Overview Use this command if you want IGMP to flood specific queries to all VLAN member ports, instead of only sending the queries to multicast group member ports.

Use the **no** variant of this command if you want IGMP to only send the queries to multicast group member ports.

Syntax

```
ip igmp flood specific-query
no ip igmp flood specific-query
```

Default By default, specific queries are flooded to all VLAN member ports.

Mode Global Configuration

Usage In an L2 switched network running IGMP, it is considered more robust to flood all specific queries. In most cases, the benefit of flooding specific queries to all VLAN member ports outweighs the disadvantages.

However, sometimes this is not the case. For example, if hosts with very low CPU capability receive specific queries for multicast groups they are not members of, their performance may degrade unacceptably. In this situation, it is desirable for IGMP to send specific queries to known member ports only. This minimizes the performance degradation of such hosts. In those circumstances, use this command to turn off flooding of specific queries.

Example To cause IGMP to flood specific queries only to multicast group member ports, use the commands:

```
awplus# configure terminal
awplus(config)# no ip igmp flood specific-query
```

Related Commands show ip igmp interface

ip igmp last-member-query-count

Overview Use this command to set the last-member query-count value for an interface.

Use the **no** variant of this command to return to the default on an interface.

Syntax

```
ip igmp last-member-query-count <2-7>
no ip igmp last-member-query-count
```

Parameter	Description
<2-7>	Last member query count value.

Default The default last member query count value is 2.

Mode Interface Configuration for a VLAN or Eth interface.

Usage This command applies to Eth interfaces configured for IGMP and VLAN interfaces configured for IGMP or IGMP Snooping.

Example To set the last-member query-count to 3 on vlan2, use the commands:

```
awplus# configure terminal
awplus(config)# interface vlan2
awplus(config-if)# ip igmp last-member-query-count 3
```

Related Commands

ip igmp last-member-query-interval

ip igmp startup-query-count

show ip igmp interface

show running-config

ip igmp last-member-query-interval

Overview Use this command to configure the frequency at which the router sends IGMP group specific host query messages.

Use the **no** variant of this command to set this frequency to the default.

Syntax

```
ip igmp last-member-query-interval <interval>
no ip igmp last-member-query-interval
```

Parameter	Description
<interval>	The frequency in milliseconds at which IGMP group-specific host query messages are sent, in the range 1000-25500.

Default 1000 milliseconds

Mode Interface Configuration for a VLAN or Eth interface.

Usage This command applies to Eth interfaces configured for IGMP and VLAN interfaces configured for IGMP or IGMP Snooping.

Example To change the IGMP group-specific host query message interval to 2 seconds (2000 milliseconds) on vlan2, use the commands:

```
awplus# configure terminal
awplus(config)# interface vlan2
awplus(config-if)# ip igmp last-member-query-interval 2000
```

Related Commands

ip igmp last-member-query-count

show ip igmp interface

show running-config

ip igmp maximum-groups

Overview Use this command to set a limit, per switch port, on the number of IGMP groups clients can join. This stops a single client from using all the switch's available group-entry resources, and ensures that clients on all ports have a chance to join IGMP groups.

Use the **no** variant of this command to remove the limit.

Syntax

```
ip igmp maximum-groups <0-65535>
no ip igmp maximum-groups
```

Parameter	Description
<0-65535>	The maximum number of IGMP groups clients can join on this switch port. 0 means no limit.

Default The default is 0, which means no limit

Mode Interface mode for a switch port

Usage We recommend using this command with IGMP snooping fast leave on the relevant VLANs. To enable fast leave, use the command:

```
awplus(config-if)# ip igmp snooping fast-leave
```

The device keeps count of the number of groups learned by each port. This counter is incremented when group joins are received via IGMP reports. It is decremented when:

- Group memberships time out
- Group leaves are received via leave messages or reports

Also, the port's group counter is cleared when:

- The port goes down
- You run the command **clear ip igmp group ***
- The port is removed from a VLAN

You can see the current value of the group counter by using either of the commands:

```
awplus# show ip igmp snooping statistics interface <port-list>
awplus# show ip igmp interface <port>
```

Example To limit clients to 10 groups on port 1.0.1, which is in vlan1, use the commands:

```
awplus# configure terminal
awplus(config)# interface port1.0.1
awplus(config-if)# ip igmp maximum-groups 10
awplus(config-if)# exit
awplus(config)# interface vlan1
awplus(config-if)# ip igmp snooping fast-leave
```

Related Commands

clear ip igmp group

ip igmp snooping fast-leave

show ip igmp interface

show ip igmp snooping statistics

ip igmp mroute-proxy

Overview Use this command to enable IGMP mroute proxy on this downstream interface and associate it with the upstream proxy service interface.

Use the **no** variant of this command to remove the association with the proxy-service interface.

Syntax

```
ip igmp mroute-proxy <interface>
no ip igmp mroute-proxy
```

Parameter	Description
<interface>	The name of the interface.

Mode Interface Configuration for a VLAN or Eth interface.

Usage This command applies to Eth interfaces and VLAN interfaces configured for IGMP Proxy.

You must also enable the IGMP proxy service on the upstream interface, using the ip igmp proxy-service command. You can associate one or more downstream mroute proxy interfaces on the device with a single upstream proxy service interface. This downstream mroute proxy interface listens for IGMP reports, and forwards them to the upstream IGMP proxy service interface.

IGMP Proxy does not work with other multicast routing protocols, such as PIM-SM or PIM-DM.

Example To configure vlan2 as the upstream proxy-service interface for the downstream vlan3 interface, use the commands:

```
awplus# configure terminal
awplus(config)# interface vlan3
awplus(config-if)# ip igmp mroute-proxy vlan2
```

Related Commands ip igmp proxy-service

ip igmp proxy-service

Overview Use this command to enable the VLAN interface to be the upstream IGMP proxy-service interface for the device. All associated downstream IGMP mroute proxy interfaces on this device will have their memberships consolidated on this proxy service interface, according to IGMP host-side functionality.

Use the **no** variant of this command to remove the designation of the VLAN interface as an upstream proxy-service interface.

Syntax

```
ip igmp proxy-service
no ip igmp proxy-service
```

Mode Interface Configuration for a VLAN or Eth interface.

Usage This command applies to Eth interfaces and VLAN interfaces configured for IGMP Proxy.

This command is used with the ip igmp mroute-proxy command to enable forwarding of IGMP reports to a proxy service interface for all forwarding entries for this interface. You must also enable the downstream IGMP mroute proxy interfaces on this device using the command ip igmp mroute-proxy.

IGMP Proxy does not work with other multicast routing protocols, such as PIM-SM or PIM-DM.

From version 5.4.7-1.1 onwards, IGMP mroute proxy interfaces do not have to be configured with an IP address before they can operate. Instead, it is possible to have an address-less interface operate as an IGMP mroute proxy interface.

This feature is useful when IGMP Proxy needs to run on many downstream interfaces. For example, you may want to use it if your device has one subscriber (multicast receiver) per VLAN, and many receivers (many VLANs) connected to the device. In such a situation, assigning IP addresses to each VLAN may not be practicable.

Note that for such interface to be able to send queries to hosts directly attached to the interface, it is necessary to enable IGMP snooping querier on the interface, using the command ip igmp snooping querier.

Example To designate VLAN1 as the upstream proxy-service interface, use the commands:

```
awplus# configure terminal
awplus(config)# interface vlan1
awplus(config-if)# ip igmp proxy-service
```

Related Commands

ip igmp mroute-proxy

ip igmp snooping querier

Command changes Version 5.4.7-1.1: Address-less interface support added.

ip igmp querier-timeout

Overview Use this command to configure the timeout period before the device takes over as the querier for the interface after the previous querier has stopped querying.

Use the **no** variant of this command to restore the default.

Syntax

```
ip igmp querier-timeout <timeout>
no ip igmp querier-timeout
```

Parameter	Description
<timeout>	IGMP querier timeout interval value in seconds, in the range 1-65535.

Default The default timeout interval is 255 seconds.

Mode Interface Configuration for a VLAN or Eth interface.

Usage This command applies to Eth and VLAN interfaces configured for IGMP.

The timeout value should not be less than the current active querier's general query interval.

Example To configure the device to wait 130 seconds from the time it received the last query before it takes over as the querier for vlan2, use the commands:

```
awplus# configure terminal
awplus(config)# interface vlan2
awplus(config-if)# ip igmp querier-timeout 130
```

Related Commands

ip igmp query-interval

show ip igmp interface

show running-config

ip igmp query-holdtime

Overview This command sets the time that an IGMP Querier waits after receiving a query solicitation before it sends an IGMP Query. IGMP General Query messages will not be sent during the hold time interval.

Use the **no** variant of this command to return to the default query hold time period.

Syntax

```
ip igmp query-holdtime <interval>
no ip igmp query-holdtime
```

Parameter	Description
<interval>	Query interval value in milliseconds, in the range <100-5000>.

Default By default the delay before sending IGMP General Query messages is 500 milliseconds.

Mode Interface Configuration for a VLAN or Eth interface.

Usage Use this command to configure a value for the IGMP query hold time in the current network. IGMP Queries can be generated after receiving Query Solicitation (QS) packets and there is a possibility of a DoS (Denial of Service) attack if a stream of Query Solicitation (QS) packets are sent to the IGMP Querier, eliciting a rapid stream of IGMP Queries. This command applies to interfaces on which the device is acting as an IGMP Querier.

Use the ip igmp query-interval command when a delay for IGMP general query messages is required and IGMP general query messages are required. The **ip igmp query-holdtime** command stops IGMP query messages during the configured holdtime interval, so the rate of IGMP Queries that can be sent out of an interface can be restricted.

See the IGMP Feature Overview and Configuration Guide for introductory information about the Query Solicitation feature.

Examples To set the IGMP query holdtime to 900 ms for vlan20, use the following commands:

```
awplus# configure terminal
awplus(config)# interface vlan20
awplus(config-if)# ip igmp query-holdtime 900
```

To reset the IGMP query holdtime to the default (500 ms) for vlan10, use the following commands:

```
awplus# configure terminal
awplus(config)# interface vlan10
awplus(config-if)# no ip igmp query-holdtime
```

Related Commands

ip igmp query-interval

ip igmp snooping tcn query solicit

show ip igmp interface

show running-config

ip igmp query-interval

Overview Use this command to configure the period for sending IGMP General Query messages.

The IGMP query interval specifies the time between IGMP General Query messages being sent.

Use the **no** variant of this command to return to the default query interval period.

NOTE: *The IGMP query interval must be greater than IGMP query maximum response time.*

Syntax

```
ip igmp query-interval <interval>
no ip igmp query-interval
```

Parameter	Description
<interval>	Query interval value in seconds, in the range <2-18000>.

Default The default IGMP query interval is 125 seconds.

Mode Interface Configuration for a VLAN or Eth interface.

Usage This command applies to interfaces configured for IGMP. Note that the IGMP query interval is automatically set to a greater value than the IGMP query max response time.

For example, if you set the IGMP query max response time to 2 seconds using the ip igmp query-max-response-time command, and the IGMP query interval is currently less than 3 seconds, then the IGMP query interval period will be automatically reconfigured to be 3 seconds, so it is greater than the IGMP query maximum response time.

Use the **ip igmp query-interval** command when a non-default interval for IGMP General Query messages is required.

The ip igmp query-holdtime command can occasionally delay the sending of IGMP Queries.

Examples To set the period between IGMP host-query messages to 3 minutes (180 seconds) for vlan20, use the following commands:

```
awplus# configure terminal
awplus(config)# interface vlan20
awplus(config-if)# ip igmp query-interval 180
```

To reset the period between sending IGMP host-query messages to the default (125 seconds) for vlan10, use the following commands:

```
awplus# configure terminal
awplus(config)# interface vlan10
awplus(config-if)# no ip igmp query-interval
```

Related Commands

ip igmp query-holdtime

ip igmp query-max-response-time

ip igmp startup-query-interval

show ip igmp interface

show running-config

ip igmp query-max-response-time

Overview Use this command to configure the maximum response time advertised in IGMP Queries.

Use the **no** variant of this command to restore the default.

NOTE: *The IGMP query maximum response time must be less than the IGMP query interval.*

Syntax

```
ip igmp query-max-response-time <response-time>
no ip igmp query-max-response-time
```

Parameter	Description
<response-time>	Response time value in seconds, in the range 1-3180.

Default The default IGMP query maximum response time is 10 seconds.

Mode Interface Configuration for a VLAN or Eth interface.

Usage This command applies to interfaces configured for IGMP.

Note that the IGMP query interval is automatically set to a greater value than the IGMP query maximum response time.

For example, if you set the IGMP query interval to 3 seconds using the ip igmp query-interval command, and the current IGMP query interval is less than 3 seconds, then the IGMP query maximum response time will be automatically reconfigured to be 2 seconds, so it is less than the IGMP query interval time.

To get the network to converge faster, use the **ip igmp query-max-response-time** command and set a low response time value, such as one or two seconds, so that the clients will respond immediately with a report as a response to the IGMP Queries.

Examples To set a maximum response time of 8 seconds for vlan20, use the following commands:

```
awplus# configure terminal
awplus(config)# interface vlan20
awplus(config-if)# ip igmp query-max-response-time 8
```

To reset the default maximum response time to the default (10 seconds) for vlan10, use the following commands:

```
awplus# configure terminal
awplus(config)# interface vlan10
awplus(config-if)# no ip igmp query-max-response-time
```

Related Commands

ip igmp query-interval

show ip igmp interface

show running-config

ip igmp ra-option

Overview Use this command to enable strict Router Alert (RA) option validation. With strict RA option enabled, IGMP packets without RA options are ignored.

Use the **no** variant of this command to disable strict RA option validation.

Syntax

```
ip igmp ra-option
no ip igmp ra-option
```

Default The default state of RA validation is unset.

Mode Interface Configuration for a VLAN or Eth interface.

Usage This command applies to interfaces configured for IGMP and IGMP Snooping.

Examples To enable strict Router Alert (RA) option validation on vlan20, use the following commands:

```
awplus# configure terminal
awplus(config)# interface vlan20
awplus(config-if)# ip igmp ra-option
```

ip igmp robustness-variable

Overview Use this command to change the robustness variable value on an interface.

Use the **no** variant of this command to return to the default on an interface.

Syntax

```
ip igmp robustness-variable <1-7>
no ip igmp robustness-variable
```

Parameter	Description
<1-7>	The robustness variable value.

Default The default robustness variable value is 2.

Mode Interface Configuration for a VLAN or Eth interface.

Usage This command applies to interfaces configured for IGMP and IGMP Snooping.

Examples To set the robustness variable to 3 on vlan20, use the following commands:

```
awplus# configure terminal
awplus(config)# interface vlan20
awplus(config-if)# ip igmp robustness-variable 3
```

Related Commands

show ip igmp interface

show running-config

ip igmp snooping

Overview Use this command to enable IGMP Snooping. When this command is used in the Global Configuration mode, IGMP Snooping is enabled at the device level. When this command is used in Interface Configuration mode, IGMP Snooping is enabled for the specified VLANs.

Use the **no** variant of this command to either globally disable IGMP Snooping, or disable IGMP Snooping on a specified interface.

NOTE: *IGMP snooping cannot be disabled on an interface if IGMP snooping has already been disabled globally. IGMP snooping can be disabled on both an interface and globally if disabled on the interface first and then disabled globally.*

Syntax

```
ip igmp snooping
no ip igmp snooping
```

Default By default, IGMP Snooping is enabled both globally and on all VLANs.

Mode Global Configuration and Interface Configuration for a VLAN interface.

Usage For IGMP snooping to operate on particular VLAN interfaces, it must be enabled both globally by using this command in Global Configuration mode, and on individual VLAN interfaces by using this command in Interface Configuration mode (both are enabled by default.)

Both IGMP snooping and MLD snooping must be enabled globally on the device for IGMP snooping to operate. MLD snooping is also enabled by default. To enable it if it has been disabled, use the ipv6 mld snooping command in Global Configuration mode.

Examples To enable IGMP Snooping on vlan2, use the commands:

```
awplus# configure terminal
awplus(config)# ip igmp snooping
awplus(config)# interface vlan2
awplus(config-if)# ip igmp snooping
```

Related Commands

ipv6 mld snooping

show ip igmp interface

show running-config

ip igmp snooping fast-leave

Overview Use this command to enable IGMP Snooping fast-leave processing. Fast-leave processing is analogous to immediate-leave processing. The IGMP group-membership entry is removed as soon as an IGMP leave group message is received, without sending out a group-specific query.

Use the **no** variant of this command to disable fast-leave processing.

Syntax
```
ip igmp snooping fast-leave
no ip igmp snooping fast-leave
```

Default IGMP Snooping fast-leave processing is disabled.

Mode Interface Configuration for a VLAN interface.

Usage This IGMP Snooping command can only be configured on VLAN interfaces.

Example To enable fast-leave processing on vlan2, use the commands:

```
awplus# configure terminal
awplus(config)# interface vlan2
awplus(config-if)# ip igmp snooping fast-leave
```

Related Commands show ip igmp interface

show running-config

ip igmp snooping mrouter

Overview Use this command to statically configure the specified port as a multicast router port for IGMP Snooping for an interface. This command applies to interfaces configured for IGMP Snooping.

Use the **no** variant of this command to remove the static configuration of the port as a multicast router port.

Syntax

```
ip igmp snooping mrouter interface <port>
no ip igmp snooping mrouter interface <port>
```

Parameter	Description
<port>	The port may be a device port (e.g. `port1.0.4`), a static channel group (e.g. `sa3`), or a dynamic (LACP) channel group (e.g. `po4`).

Mode Interface Configuration for a VLAN interface.

Example To configure port1.0.2 statically as a multicast router interface for vlan2, use the commands:

```
awplus# configure terminal
awplus(config)# interface vlan2
awplus(config-if)# ip igmp snooping mrouter interface port1.0.2
```

Related Commands show ip igmp snooping mrouter

ip igmp snooping querier

Overview Use this command to enable IGMP querier operation when no multicast routing protocol is configured. When enabled, the IGMP Snooping querier sends out periodic IGMP queries for all interfaces. This command applies to interfaces configured for IGMP Snooping.

Use the **no** variant of this command to disable IGMP querier configuration.

Syntax

```
ip igmp snooping querier
no ip igmp snooping querier
```

Mode Interface Configuration for a VLAN interface.

Usage The IGMP Snooping querier uses the `0.0.0.0` Source IP address because it only masquerades as a proxy IGMP querier for faster network convergence.

It does not start, or automatically cease, the IGMP Querier operation if it detects query message(s) from a multicast router.

If an IP address is assigned to a VLAN, which has IGMP querier enabled on it, then the IGMP Snooping querier uses the VLAN's IP address as the Source IP Address in IGMP queries.

The IGMP Snooping Querier will not stop sending IGMP Queries if there is another IGMP Snooping Querier in the network with a lower Source IP Address.

NOTE: *Do not enable the IGMP Snooping Querier feature on a Layer 2 device when there is an operational IGMP Querier in the network.*

Example To configure vlan2 as a Snooping querier, use the commands:

```
awplus# configure terminal
awplus(config)# interface vlan2
awplus(config-if)# ip igmp snooping querier
```

Related Commands

show ip igmp interface

show running-config

ip igmp snooping report-suppression

Overview Use this command to enable report suppression for IGMP versions 1 and 2. This command applies to interfaces configured for IGMP Snooping.

Report suppression stops reports being sent to an upstream multicast router port when there are already downstream ports for this group on this interface.

Use the **no** variant of this command to disable report suppression.

Syntax

```
ip igmp snooping report-suppression
no ip igmp snooping report-suppression
```

Default Report suppression does not apply to IGMPv3, and is turned on by default for IGMPv1 and IGMPv2 reports.

Mode Interface Configuration for a VLAN interface.

Example To enable report suppression for IGMPv2 reports for vlan2, use the commands:

```
awplus# configure terminal
awplus(config)# interface vlan2
awplus(config-if)# ip igmp version 2
awplus(config-if)# ip igmp snooping report-suppression
```

Related Commands show ip igmp interface

show running-config

ip igmp snooping routermode

Overview Use this command to set the destination IP addresses as router multicast addresses.

Use the **no** variant of this command to set it to the default. You can also remove a specified IP address from a custom list of multicast addresses.

Syntax

```
ip igmp snooping routermode
{all|default|ip|multicastrouter|address <ip-address>}
```

```
no ip igmp snooping routermode [address <ip-address>]
```

Parameter	Description
`all`	All reserved multicast addresses (224.0.0.x). Packets from all possible addresses in range 224.0.0.x are treated as coming from routers.
`default`	Default set of reserved multicast addresses. Packets from 224.0.0.1, 224.0.0.2, 224.0.0.4, 224.0.0.5, 224.0.0.6, 224.0.0.9, 224.0.0.13, 224.0.0.15 and 224.0.0.24 are treated as coming from routers.
`ip`	Custom reserved multicast addresses. Packets from custom IP address in the 224.0.0.x range are treated as coming from routers.
`multicastrouter`	Packets from DVMRP (224.0.0.4) and PIM (224.0.0.13) multicast addresses are treated as coming from routers.
`address <ip-address>`	Packets from the specified multicast address are treated as coming from routers. The address must be in the 224.0.0.x range.

Default The default routermode is **default** (not **all**) and shows the following reserved multicast addresses:

```
Router mode.............Def

Reserved multicast address
         224.0.0.1
         224.0.0.2
         224.0.0.4
         224.0.0.5
         224.0.0.6
         224.0.0.9
         224.0.0.13
         224.0.0.15
         224.0.0.24
```

Mode Global Configuration

Examples

To set **ip igmp snooping routermode** for all default reserved addresses enter:

```
awplus(config)# ip igmp snooping routermode default
```

To remove the multicast address 224.0.0.5 from the custom list of multicast addresses enter:

```
awplus(config)# no ip igmp snooping routermode address
224.0.0.5
```

Related commands

ip igmp trusted

show ip igmp snooping routermode

ip igmp snooping source-timeout

Overview Use this command to set the global IGMP Snooping source time-out value (in seconds) on the switch.

Use the **no** variant of this command to set the source time-out value to be the same as the group membership timeout.

Syntax

```
ip igmp snooping source-timeout <timeout>
no ip igmp snooping source-timeout <timeout>
```

Parameter	Description
<timeout>	Time-out value in seconds *<0-86400>*

Default Global IGMP Snooping source-timeout is disabled by default, and unregistered multicast will be timed-out like normal entries.

Interface IGMP Snooping source timeout is disabled by default, and unregistered multicast will be timed-out like normal entries.

Mode Interface/Global Configuration

Usage The timeout determines how long unregistered multicast entries will be kept for. If the value '0' is specified, then effectively all unregistered multicast entries will never be timed out, and can only be cleared by using the command **clear ip igmp group**. The interface settings will always take precedence over the global setting.

Example To configure IGMP Snooping source timeout globally on a switch, use the commands:

```
awplus# configure terminal
awplus(config)# interface vlan1
awplus(config-if)# ip igmp snooping source-timeout 200
```

Related Commands show ip igmp snooping source-timeout

ip igmp snooping tcn query solicit

Overview Use this command to enable IGMP (Internet Group Management Protocol) Snooping TCN (Topology Change Notification) Query Solicitation feature. When this command is used in the Global Configuration mode, Query Solicitation is enabled.

Use the **no** variant of this command to disable IGMP Snooping TCN Query Solicitation. When the **no** variant of this command is used in Interface Configuration mode, this overrides the Global Configuration mode setting and Query Solicitation is disabled.

Syntax

```
ip igmp snooping tcn query solicit
no ip igmp snooping tcn query solicit
```

Default IGMP Snooping TCN Query Solicitation is disabled by default on the device, unless the device is the Master Node in an EPSR ring, or is the Root Bridge in a Spanning Tree.

When the device is the Master Node in an EPSR ring, or the device is the Root Bridge in a Spanning Tree, then IGMP Snooping TCN Query Solicitation is enabled by default and cannot be disabled using the Global Configuration mode command. However, Query Solicitation can be disabled for specified interfaces using the **no** variant of this command from the Interface Configuration mode.

Mode Global Configuration, and Interface Configuration for a VLAN interface.

Usage Once enabled, if the device is not an IGMP Querier, on detecting a topology change, the device generates IGMP Query Solicit messages that are sent to all the ports of the vlan configured for IGMP Snooping on the device.

On a device that is not the Master Node in an EPSR ring or the Root Bridge in a Spanning Tree, Query Solicitation can be disabled using the **no** variant of this command after being enabled.

If the device that detects a topology change is an IGMP Querier then the device will generate an IGMP Query message.

Note that the **no** variant of this command when issued in Global Configuration mode has no effect on a device that is the Master Node in an EPSR ring or on a device that is a Root Bridge in a Spanning Tree. Query Solicitation is not disabled for the device these instances. However, Query Solicitation can be disabled on a per-vlan basis from the Interface Configuration mode.

See the following state table that shows when Query Solicit messages are sent in these instances:

Command issued from Global Configuration	Command issued from Interface Configuration	Device is STP Root Bridge or the EPSR Master Node	IGMP Query Solicit message sent on VLAN
No	Yes	Yes	Yes
Yes	No	Yes	No
Yes	Yes	Yes	Yes

See the IGMP Feature Overview and Configuration Guide for introductory information about the Query Solicitation feature.

Examples To enable Query Solicitation on a device, use the commands:

```
awplus# configure terminal
awplus(config)# ip igmp snooping tcn query solicit
```

To disable Query Solicitation on a device, use the commands:

```
awplus# configure terminal
awplus(config)# no ip igmp snooping tcn query solicit
```

To enable Query Solicitation for vlan2, use the commands:

```
awplus# configure terminal
awplus(config)# interface vlan2
awplus(config-if)# ip igmp snooping tcn query solicit
```

To disable Query Solicitation for vlan2, use the commands:

```
awplus# configure terminal
awplus(config)# interface vlan2
awplus(config-if)# no ip igmp snooping tcn query solicit
```

Related Commands

ip igmp query-holdtime

show ip igmp interface

show running-config

ip igmp source-address-check

Overview This command enables the checking of the Source Address for an IGMP Report, rejecting any IGMP Reports originating on devices outside of the local subnet.

Use the **no** variant of this command to disable the checking of the Source Address for an IGMP Report, which allows IGMP Reports from devices outside of the local subnet.

Syntax

```
ip igmp source-address-check
no ip igmp source-address-check
```

Default Source address checking for IGMP Reports is enabled by default.

Mode Interface Configuration for a VLAN or Eth interface.

Usage This is a security feature, and should be enabled unless IGMP Reports from outside the local subnet are expected, for example, if Multicast VLAN Registration is active in the network.

The no variant of this command is required to disable the IGMP Report source address checking feature in networks that use Multicast VLAN Registration to allow IGMP Reports from devices outside of the local subnet.

Examples To deny IGMP Reports from outside the current subnet for vlan20, use the following commands:

```
awplus# configure terminal
awplus(config)# interface vlan20
awplus(config-if)# ip igmp source-address-check
```

To allow IGMP Reports from outside the current subnet for vlan10, use the following commands:

```
awplus# configure terminal
awplus(config)# interface vlan10
awplus(config-if)# no ip igmp source-address-check
```

Validation Commands show ip igmp interface

show running-config

ip igmp startup-query-count

Overview Use this command to configure the IGMP startup query count for an interface. The IGMP startup query count is the number of IGMP General Query messages sent by a querier at startup. The default IGMP startup query count is 2.

Use the **no** variant of this command to return an interface's configured IGMP startup query count to the default.

Syntax

```
ip igmp startup-query-count <startup-query-count>
no ip igmp startup-query-count
```

Parameter	Description
<startup-query-count>	Specify the IGMP startup query count, in the range 2-10.

Default The default IGMP startup query count is 2.

Mode Interface Configuration for a VLAN or Eth interface.

Example To set the IGMP startup query count to `4` on vlan2, use the commands:

```
awplus# configure terminal
awplus(config)# interface vlan2
awplus(config-if)# ip igmp startup-query-count 4
```

Related Commands

ip igmp last-member-query-count

ip igmp startup-query-interval

ip igmp startup-query-interval

Overview Use this command to configure the IGMP startup query interval for an interface. The IGMP startup query interval is the amount of time in seconds between successive IGMP General Query messages sent by a querier during startup. The default IGMP startup query interval is one quarter of the IGMP query interval value.

Use the **no** variant of this command to return an interface's configured IGMP startup query interval to the default.

Syntax

```
ip igmp startup-query-interval <startup-query-interval>
no ip igmp startup-query-interval
```

Parameter	Description
<startup-query-interval>	Specify the IGMP startup query interval, in the range of 2-1800 seconds. The value must be one quarter of the IGMP query interval value.

Default The default IGMP startup query interval is one quarter of the IGMP query interval value.

NOTE: *The IGMP startup query interval must be one quarter of the IGMP query interval.*

Mode Interface Configuration for a VLAN or Eth interface.

Example To set the IGMP startup query interval to 15 seconds for vlan2, which is one quarter of the IGMP query interval of 60 seconds, use the commands:

```
awplus# configure terminal
awplus(config)# interface vlan2
awplus(config-if)# ip igmp query-interval 60
awplus(config-if)# ip igmp startup-query-interval 15
```

Related Commands

ip igmp last-member-query-interval

ip igmp query-interval

ip igmp startup-query-count

ip igmp trusted

Overview Use this command to allow IGMP to process packets received on certain trusted ports only.

Use the **no** variant of this command to stop IGMP from processing specified packets if the packets are received on the specified ports or aggregator.

Syntax

```
ip igmp trusted {all|query|report|routermode}
no ip igmp trusted {all|query|report|routermode}
```

Parameter	Description
`all`	Specifies whether or not the interface is allowed to receive all IGMP and other routermode packets
`query`	Specifies whether or not the interface is allowed to receive IGMP queries
`report`	Specifies whether or not the interface is allowed to receive IGMP membership reports
`routermode`	Specifies whether or not the interface is allowed to receive routermode packets

Default By default, all ports and aggregators are trusted interfaces, so IGMP is allowed to process all IGMP query, report, and router mode packets arriving on all interfaces.

Mode Interface mode for one or more switch ports or aggregators

Usage Because all ports are trusted by default, use this command in its **no** variant to stop IGMP processing packets on ports you do not trust.

For example, you can use this command to make sure that only ports attached to approved IGMP routers are treated as router ports.

Example To stop ports port1.0.3-port1.0.6 from being treated as router ports by IGMP, use the commands:

```
awplus(config)# interface port1.0.3-port1.0.6
awplus(config-if)# no ip igmp trusted routermode
```

Related Commands ip igmp snooping routermode

ip igmp version

Overview Use this command to set the current IGMP version (IGMP version 1, 2 or 3) on an interface.

Use the **no** variant of this command to return to the default version.

Syntax

```
ip igmp version <1-3>
no ip igmp version
```

Parameter	Description
`version <1-3>`	IGMP protocol version number

Default The default IGMP version is 3.

Mode Interface Configuration for a VLAN or Eth interface.

Example To set the IGMP version to 2 for vlan2, use the commands:

```
awplus# configure terminal
awplus(config)# interface vlan2
awplus(config-if)# ip igmp version 2
```

Related Commands show ip igmp interface

show debugging igmp

Overview Use this command to display the IGMP debugging options set.

For information on filtering and saving command output, see the "Getting Started with AlliedWare Plus" Feature Overview and Configuration Guide.

Syntax

```
show debugging igmp
```

Mode User Exec and Privileged Exec

Example To display the IGMP debugging options set, enter the command:

```
awplus# show debugging igmp
```

Output Figure 33-1: Example output from the **show debugging igmp** command

```
IGMP Debugging status:
  IGMP Decoder debugging is on
  IGMP Encoder debugging is on
  IGMP Events debugging is on
  IGMP FSM debugging is on
  IGMP Tree-Info-Base (TIB) debugging is on
```

Related Commands debug igmp

show ip igmp groups

Overview Use this command to display the multicast groups with receivers directly connected to the router, and learned through IGMP.

For information on filtering and saving command output, see the "Getting Started with AlliedWare Plus" Feature Overview and Configuration Guide.

Syntax

```
show ip igmp groups [<ip-address>|<interface> detail]
```

Parameter	Description
<ip-address>	Address of the multicast group, entered in the form A.B.C.D.
<interface>	Interface name for which to display local information.

Mode User Exec and Privileged Exec

Example The following command displays local-membership information for all ports in all interfaces:

```
awplus# show ip igmp groups
```

Output Figure 33-2: Example output from **show ip igmp groups**

```
IGMP Connected Group Membership
Group Address    Interface       Uptime    Expires   Last Reporter
224.0.1.1        port1.0.1       00:00:09  00:04:17  10.10.0.82
224.0.1.24       port1.0.2       00:00:06  00:04:14  10.10.0.84
224.0.1.40       port1.0.3       00:00:09  00:04:15  10.10.0.91
224.0.1.60       port1.0.3       00:00:05  00:04:15  10.10.0.7
224.100.100.100  port1.0.1       00:00:11  00:04:13  10.10.0.91
228.5.16.8       port1.0.3       00:00:11  00:04:16  10.10.0.91
228.81.16.8      port1.0.7       00:00:05  00:04:15  10.10.0.91
228.249.13.8     port1.0.3       00:00:08  00:04:17  10.10.0.91
235.80.68.83     port1.0.11      00:00:12  00:04:15  10.10.0.40
239.255.255.250  port1.0.3       00:00:12  00:04:15  10.10.0.228
239.255.255.254  port1.0.12      00:00:08  00:04:13  10.10.0.84
```

Table 33-1: Parameters in the output of **show ip igmp groups**

Parameter	Description
`Group Address`	Address of the multicast group.
`Interface`	Port through which the group is reachable.
`Uptime`	The time in weeks, days, hours, minutes, and seconds that this multicast group has been known to the device.

Table 33-1: Parameters in the output of **show ip igmp groups** (cont.)

Parameter	Description
`Expires`	Time (in hours, minutes, and seconds) until the entry expires.
`Last Reporter`	Last host to report being a member of the multicast group.

show ip igmp interface

Overview Use this command to display the state of IGMP, IGMP Proxy service, and IGMP Snooping for a specified VLAN, or all VLANs. IGMP is shown as Active or Disabled in the show output. You can also display the number of groups a switch port belongs to.

For information on filtering and saving command output, see the "Getting Started with AlliedWare Plus" Feature Overview and Configuration Guide.

Syntax

```
show ip igmp interface [<interface>]
```

Parameter	Description
<interface>	The name of the interface. If you specify a switch port number, the output displays the number of groups the port belongs to, and the port's group membership limit, if a limit has been set (with the command ip igmp maximum-groups).

Mode User Exec and Privileged Exec

Output The following output shows IGMP interface status for vlan2 with IGMP Snooping enabled:

```
awplus#show ip igmp interface vlan2
Interface vlan2 (Index 202)
 IGMP Disabled, Inactive, Version 3 (default)
 IGMP interface has 0 group-record states
 IGMP activity: 0 joins, 0 leaves
 IGMP robustness variable is 2
 IGMP last member query count is 2
 IGMP query interval is 125 seconds
 IGMP query holdtime is 500 milliseconds
 IGMP querier timeout is 255 seconds
 IGMP max query response time is 10 seconds
 Last member query response interval is 1000 milliseconds
 Group Membership interval is 260 seconds
 Strict IGMPv3 ToS checking is disabled on this interface
 Source Address checking is enabled
 IGMP Snooping is globally enabled
 IGMP Snooping query solicitation is globally disabled
  Num. query-solicit packets: 57 sent, 0 recvd
 IGMP Snooping is enabled on this interface
 IGMP Snooping fast-leave is not enabled
 IGMP Snooping querier is not enabled
 IGMP Snooping report suppression is enabled
```

The following output shows IGMP interface status for vlan2 with IGMP Snooping disabled:

```
awplus#show ip igmp interface vlan2
Interface vlan2 (Index 202)
 IGMP Disabled, Inactive, Version 3 (default)
 IGMP interface has 0 group-record states
 IGMP activity: 0 joins, 0 leaves
 IGMP robustness variable is 2
 IGMP last member query count is 2
 IGMP query interval is 125 seconds
 IGMP query holdtime is 500 milliseconds
 IGMP querier timeout is 255 seconds
 IGMP max query response time is 10 seconds
 Last member query response interval is 1000 milliseconds
 Group Membership interval is 260 seconds
 Strict IGMPv3 ToS checking is disabled on this interface
 Source Address checking is enabled
 IGMP Snooping is globally enabled
 IGMP Snooping query solicitation is globally disabled
  Num. query-solicit packets: 57 sent, 0 recvd
 IGMP Snooping is not enabled on this interface
 IGMP Snooping fast-leave is not enabled
 IGMP Snooping querier is not enabled
 IGMP Snooping report suppression is enabled
```

The following output displays membership information for port1.0.1:

```
awplus#show ip igmp interface port1.0.1
IGMP information for port1.0.1
    Maximum groups limit set: 10
    Number of groups port belongs to: 0
```

show ip igmp proxy

Overview Use this command to display the state of IGMP Proxy services for a specified interface or for all interfaces.

For information on filtering and saving command output, see the "Getting Started with AlliedWare Plus" Feature Overview and Configuration Guide.

Syntax

```
show ip igmp proxy
show ip igmp proxy groups [detail]
show ip igmp proxy groups <multicast-group> [detail]
show ip igmp proxy groups <vlan> [detail]
show ip igmp proxy groups <vlan> <multicast-group> [detail]
```

Parameter	Description
`groups`	Specify IGMP proxy group membership information.
`detail`	Specify detailed IGMPv3 source information.
<vlan>	Specify the name of a single VLAN interface, for example **vlan1**.
<multicast-group>	Specify the IPv4 address in of the multicast group, in the format A.B.C.D.

Mode User Exec and Privileged Exec

Example To display the state of IGMP Proxy services for all interfaces, enter the command:

```
awplus# show ip igmp proxy
```

To display the state of IGMP Proxy services for VLAN interface vlan1, enter the command:

```
awplus# show ip igmp proxy groups vlan1
```

To display the detailed state of IGMP Proxy services for VLAN interface **vlan1**, enter the command:

```
awplus# show ip igmp proxy groups vlan1 detail
```

Related Commands ip igmp proxy-service

show ip igmp snooping mrouter

Overview Use this command to display the multicast router ports, both static and dynamic, in a VLAN.

For information on filtering and saving command output, see the "Getting Started with AlliedWare Plus" Feature Overview and Configuration Guide.

Syntax

```
show ip igmp snooping mrouter [interface <interface>]
```

Parameter	Description
`interface`	A specific interface.
`<interface>`	The name of the VLAN interface.

Mode User Exec and Privileged Exec

Example To show all multicast router interfaces, use the command:

```
awplus# show ip igmp snooping mrouter
```

To show the multicast router interfaces in `vlan1`, use the command:

```
awplus# show ip igmp snooping mrouter interface vlan1
```

Output Figure 33-3: Example output from **show ip igmp snooping mrouter**

```
VLAN    Interface   Static/Dynamic
1       port1.0.5   Statically configured
200     port1.0.2   Statically configured
```

Figure 33-4: Example output from **show ip igmp snooping mrouter interface vlan1**

```
VLAN    Interface   Static/Dynamic
1       port1.0.5   Statically configured
```

Related Commands ip igmp snooping mrouter

show ip igmp snooping routermode

Overview Use this command to display the current router mode and the list of IP addresses set as router multicast addresses from the ip igmp snooping routermode command.

For information on filtering and saving command output, see the "Getting Started with AlliedWare Plus" Feature Overview and Configuration Guide.

Syntax

```
show ip igmp snooping routermode
```

Mode User Exec and Privileged Exec

Example To show the router mode and the list of router multicast addresses, use the command:

```
awplus# show ip igmp snooping routermode
```

Output Figure 33-5: Example output from **show ip igmp snooping routermode**

```
awplus#show ip igmp snooping routermode
Router mode.............Def
Reserved multicast address

         224.0.0.1
         224.0.0.2
         224.0.0.4
         224.0.0.5
         224.0.0.6
         224.0.0.9
         224.0.0.13
         224.0.0.15
         224.0.0.24
```

Related Commands ip igmp snooping routermode

show ip igmp snooping source-timeout

Overview Use this command to display the configured IGMP snooping source timeouts for a specified VLAN or VLAN range.

Syntax
```
show ip igmp snooping source-timeout [interface|
<interface-range>]
```

Parameter	Description
<interface-range>	The name of the VLAN interface or VLAN range

Mode Privileged Exec

Example To display the configured IGMP snooping source timeouts for all VLANs, use the command:

```
awplus# show ip igmp snooping source-timeout
```

Output Figure 33-6: Example output from **show ip igmp snooping source-timeout**

```
awplus#show ip igmp snooping source-timeout
Global IGMP snooping source-timeout is enabled (60 secs)

vlan1           enabled (300 secs)
vlan2           inherits global setting
vlan1000        inherits global settingawplus#show ip igmp
snooping source-timeout int vlan1
Global IGMP snooping source-timeout is enabled (60 secs)vlan1
enabled (300 secs)
```

Related Commands ip igmp snooping source-timeout

show ip igmp snooping statistics

Overview Use this command to display IGMP Snooping statistics data.

For information on filtering and saving command output, see the "Getting Started with AlliedWare Plus" Feature Overview and Configuration Guide.

Syntax

```
show ip igmp snooping statistics interface <interface-range>
[group [<ip-address>]]
```

Parameter	Description
<ip-address>	Optionally specify the address of the multicast group, entered in the form A.B.C.D.
<interface>	Specify the name of the interface or interface range. If you specify a port number, the output displays the number of groups the port belongs to, and the port's group membership limit, if a limit has been set (with the command ip igmp maximum-groups)

Mode Privileged Exec

Example To display IGMP statistical information for **vlan1** and **vlan2**, use the command:

```
awplus# show ip igmp snooping statistics interface vlan1-vlan2
```

Output Figure 33-7: Example output from the **show ip igmp snooping statistics** command for VLANs

```
awplus#show ip igmp interface vlan1-vlan2
IGMP Snooping statistics for vlan1
Interface:      port1.0.3
Group:          224.1.1.1
Uptime:         00:00:09
Group mode:     Exclude (Expires: 00:04:10)
Last reporter:  10.4.4.5
Source list is empty
IGMP Snooping statistics for vlan2
Interface:      port1.0.4
Group:          224.1.1.2
Uptime:         00:00:19
Group mode:     Exclude (Expires: 00:05:10)
Last reporter:  10.4.4.6
Source list is empty
```

Figure 33-8: Example output from the **show ip igmp snooping statistics** command for a switch port

```
awplus#show ip igmp interface port1.0.1
IGMP information for port1.0.1
    Maximum groups limit set: 10
    Number of groups port belongs to: 0
```

undebug igmp

Overview This command applies the functionality of the no debug igmp command.

34 MLD and MLD Snooping Commands

Introduction

Overview

This chapter provides an alphabetical reference of configuration, clear, and show commands related to MLD and MLD Snooping.

The Multicast Listener Discovery (MLD) module includes the MLD Proxy service and MLD Snooping functionality. Some of the following commands may have commonalities and restrictions; these are described under the Usage section for each command.

MLD and MLD Snooping commands only apply to switch ports, not ETH interfaces.

Before using PIM-SMv6:

- IPv6 must be enabled on an interface (ipv6 enable),
- IPv6 forwarding must be enabled globally for routing IPv6 (ipv6 forwarding), and
- IPv6 multicasting must be enabled globally (ipv6 multicast-routing).

The IPv6 Multicast addresses shown can be derived from IPv6 unicast prefixes as per RFC 3306. The IPv6 unicast prefix reserved for documentation is 2001:0db8::/32 as per RFC 3849. Using the base /32 prefix the IPv6 multicast prefix for 2001:0db8::/32 is ff3x:20:2001:0db8::/64. Where an RP address is 2001:0db8::1 the embedded RP multicast prefix is ff7x:120:2001:0db8::/96. For ASM (Any-Source Multicast) the IPV6 multicast addresses allocated for documentation purposes are ff0x::0db8:0:0/96 as per RFC 6676. This is a /96 prefix so that it can be used with group IDs as per RFC 3307. These addresses should not be used for practical networks (other than for testing purposes), nor should they appear in any public network.

The IPv6 addresses shown use the address space 2001:0db8::/32, defined in RFC 3849 for documentation purposes. These addresses should not be used for practical networks (other than for testing purposes) nor should they appear on any public network.

Command List

- "clear ipv6 mld" on page 1598

- "clear ipv6 mld group" on page 1599
- "clear ipv6 mld interface" on page 1600
- "debug mld" on page 1601
- "ipv6 mld" on page 1602
- "ipv6 mld last-member-query-count" on page 1603
- "ipv6 mld last-member-query-interval" on page 1604
- "ipv6 mld querier-timeout" on page 1605
- "ipv6 mld query-interval" on page 1606
- "ipv6 mld query-max-response-time" on page 1607
- "ipv6 mld robustness-variable" on page 1608
- "ipv6 mld snooping" on page 1609
- "ipv6 mld snooping fast-leave" on page 1611
- "ipv6 mld snooping mrouter" on page 1612
- "ipv6 mld snooping querier" on page 1614
- "ipv6 mld snooping report-suppression" on page 1615
- "ipv6 mld ssm-map enable" on page 1617
- "ipv6 mld static-group" on page 1618
- "ipv6 mld version" on page 1620
- "show debugging mld" on page 1621
- "show ipv6 mld groups" on page 1622
- "show ipv6 mld interface" on page 1623
- "show ipv6 mld snooping mrouter" on page 1624
- "show ipv6 mld snooping statistics" on page 1625

clear ipv6 mld

Overview Use this command to clear all MLD local memberships on all interfaces.

Syntax
```
clear ipv6 mld
```

Mode Privileged Exec

Usage This command applies to interfaces configured for MLD Layer-3 multicast protocols and learned by MLD Snooping.

Example
```
awplus# clear ipv6 mld
```

Related Commands clear ipv6 mld group

clear ipv6 mld interface

clear ipv6 mld group

Overview Use this command to clear MLD specific local-membership(s) on all interfaces, for a particular group.

Syntax

```
clear ipv6 mld group {*|<ipv6-address>}
```

Parameter	Description
*	Clears all groups on all interfaces. This is an alias to the clear ipv6 mld command.
<ipv6-address>	Specify the group address for which MLD local-memberships are to be cleared from all interfaces. Specify the IPv6 multicast group address in the format in the format X:X::X:X.

Mode Privileged Exec

Usage This command applies to interfaces configured for MLD Layer-3 multicast protocols and learned by MLD Snooping.

Example

```
awplus# clear ipv6 mld group *
```

Related Commands clear ipv6 mld

clear ipv6 mld interface

clear ipv6 mld interface

Overview Use this command to clear MLD interface entries.

Syntax

```
clear ipv6 mld interface <interface>
```

Parameter	Description
<interface>	Specifies name of the interface; all groups learned from this interface are deleted.

Mode Privileged Exec

Usage This command applies to interfaces configured for MLD Layer-3 multicast protocols and learned by MLD Snooping.

Example

```
awplus# clear ipv6 mld interface vlan2
```

Related Commands clear ipv6 mld

clear ipv6 mld group

debug mld

Overview Use this command to enable all MLD debugging modes, or a specific MLD debugging mode.

Use the **no** variant of this command to disable all MLD debugging modes, or a specific MLD debugging mode.

Syntax

```
debug mld {all|decode|encode|events|fsm|tib}
no debug mld {all|decode|encode|events|fsm|tib}
```

Parameter	Description
`all`	Debug all MLD.
`decode`	Debug MLD decoding.
`encode`	Debug MLD encoding.
`events`	Debug MLD events.
`fsm`	Debug MLD Finite State Machine (FSM).
`tib`	Debug MLD Tree Information Base (TIB).

Mode Privileged Exec and Global Configuration

Usage This command applies to interfaces configured for MLD Layer 3 multicast protocols and learned by MLD Snooping.

Examples

```
awplus# configure terminal
awplus(config)# debug mld all
awplus# configure terminal
awplus(config)# debug mld decode
awplus# configure terminal
awplus(config)# debug mld encode
awplus# configure terminal
awplus(config)# debug mld events
```

Related Commands show debugging mld

ipv6 mld

Overview Use this command to enable the MLD protocol operation on an interface. This command enables MLD protocol operation in stand-alone mode, and can be used to learn local-membership information prior to enabling a multicast routing protocol on the interface.

Use the **no** variant of this command to return all MLD related configuration to the default (including MLD Snooping).

Syntax

```
ipv6 mld
no ipv6 mld
```

Default MLD is disabled by default.

Mode Interface Configuration for a specified VLAN interface or a range of VLAN interfaces.

Usage MLD requires memory for storing data structures, as well as the hardware tables to implement hardware routing. As the number of ports, VLANs, static and dynamic groups increases then more memory is consumed. You can track the memory used for MLD with the command:

```
awplus# show memory pools nsm | grep MLD
```

Static and dynamic groups (LACP), ports and VLANs are not limited for MLD. For VLANs, this allows you to configure MLD across more VLANs with fewer ports per VLAN, or fewer VLANs with more ports per VLAN. For LACPs, you can configure MLD across more LACP groups with fewer ports per LACP, or fewer LACP groups with more ports per LACP.

Example

```
awplus# configure terminal
awplus(config)# ipv6 forwarding
awplus(config)# ipv6 multicast-routing
awplus(config)# interface vlan1
awplus(config-if)# ipv6 enable
awplus(config-if)# ipv6 mld
```

ipv6 mld last-member-query-count

Overview Use this command to set the last-member query-count value.

Use the **no** variant of this command to return to the default on an interface.

Syntax

```
ipv6 mld last-member-query-count <value>
no ipv6 mld last-member-query-count
```

Parameter	Description
<value>	Count value. Valid values are from `2 to 7`.

Default The default last-member query-count value is 2.

Mode Interface Configuration for a specified VLAN interface or a range of VLAN interfaces.

Example

```
awplus# configure terminal
awplus(config)# ipv6 forwarding
awplus(config)# ipv6 multicast-routing
awplus(config)# interface vlan2
awplus(config-if)# ipv6 enable
awplus(config-if)# ipv6 mld last-member-query-count 3
```

ipv6 mld last-member-query-interval

Overview Use this command to configure the interval at which the router sends MLD group-specific host query messages.

Use the **no** variant of this command to set this frequency to the default.

Syntax

```
ipv6 mld last-member-query-interval <milliseconds>
no ipv6 mld last-member-query-interval
```

Parameter	Description
<milliseconds>	The time delay between successive query messages (in milliseconds). Valid values are from 1000 to 25500 milliseconds.

Default 1000 milliseconds

Mode Interface Configuration for a specified VLAN interface or a range of VLAN interfaces.

Example

```
awplus# configure terminal
awplus(config)# ipv6 forwarding
awplus(config)# ipv6 multicast-routing
awplus(config)# interface vlan2
awplus(config-if)# ipv6 enable
awplus(config-if)# ipv6 mld last-member-query-interval 2000
```

ipv6 mld querier-timeout

Overview Use this command to configure the timeout period before the router takes over as the querier for the interface after the previous querier has stopped querying.

Use the **no** variant of this command to restore the default.

Syntax

```
ipv6 mld querier-timeout <seconds>
no ipv6 mld querier-timeout
```

Parameter	Description
<seconds>	Number of seconds that the router waits after the previous querier has stopped querying before it takes over as the querier. Valid values are from 2 to 65535 seconds.

Default 255 seconds

Mode Interface Configuration for a specified VLAN interface or a range of VLAN interfaces.

Usage This command applies to interfaces configured for MLD Layer-3 multicast protocols.

Example The following example configures the router to wait 120 seconds from the time it received the last query before it takes over as the querier for the interface:

```
awplus# configure terminal
awplus(config)# ipv6 forwarding
awplus(config)# ipv6 multicast-routing
awplus(config)# interface vlan2
awplus(config-if)# ipv6 enable
awplus(config-if)# ipv6 mld querier-timeout 120
```

Related Commands ipv6 mld query-interval

ipv6 mld query-interval

Overview Use this command to configure the frequency of sending MLD host query messages.

Use the **no** variant of this command to return to the default frequency.

Syntax

```
ipv6 mld query-interval <seconds>
no ipv6 mld query-interval
```

Parameter	Description
<seconds>	Variable that specifies the time delay between successive MLD host query messages (in seconds). Valid values are from `1 to 18000 seconds`.

Default The default query interval is 125 seconds.

Mode Interface Configuration for a specified VLAN interface or a range of VLAN interfaces.

Usage This command applies to interfaces configured for MLD Layer-3 multicast protocols.

Example The following example changes the frequency of sending MLD host-query messages to 2 minutes:

```
awplus# configure terminal
awplus(config)# ipv6 forwarding
awplus(config)# ipv6 multicast-routing
awplus(config)# interface vlan2
awplus(config-if)# ipv6 enable
awplus(config-if)# ipv6 mld query-interval 120
```

Related Commands ipv6 mld querier-timeout

ipv6 mld query-max-response-time

Overview Use this command to configure the maximum response time advertised in MLD queries.

Use the **no** variant of with this command to restore the default.

Syntax

```
ipv6 mld query-max-response-time <seconds>
no ipv6 mld query-max-response-time
```

Parameter	Description
<seconds>	Maximum response time (in seconds) advertised in MLD queries. Valid values are from 1 to 240 seconds.

Default 10 seconds

Mode Interface Configuration for a specified VLAN interface or a range of VLAN interfaces.

Usage This command applies to interfaces configured for MLD Layer-3 multicast protocols.

Example The following example configures a maximum response time of 8 seconds:

```
awplus# configure terminal
awplus(config)# ipv6 forwarding
awplus(config)# ipv6 multicast-routing
awplus(config)# interface vlan2
awplus(config-if)# ipv6 enable
awplus(config-if)# ipv6 mld query-max-response-time 8
```

ipv6 mld robustness-variable

Overview Use this command to change the robustness variable value on an interface.

Use the **no** variant of this command to return to the default on an interface.

Syntax

```
ipv6 mld robustness-variable <value>
no ipv6 mld robustness-variable
```

Default The default robustness variable value is 2.

Mode Interface Configuration for a specified VLAN interface or a range of VLAN interfaces.

Usage This command applies to interfaces configured for MLD Layer-3 multicast protocols.

Example

```
awplus# configure terminal
awplus(config)# ipv6 forwarding
awplus(config)# ipv6 multicast-routing
awplus(config)# interface vlan2
awplus(config-if)# ipv6 enable
awplus(config-if)# ipv6 mld robustness-variable 3
```

ipv6 mld snooping

Overview Use this command to enable MLD Snooping. When this command is issued in the Global Configuration mode, MLD Snooping is enabled globally for the device. When this command is issued in Interface mode for a VLAN then MLD Snooping is enabled for the specified VLAN. Note that MLD Snooping is enabled on the VLAN only if it is enabled globally and on the VLAN.

Use the **no** variant of this command to globally disable MLD Snooping in Global Configuration mode, or for the specified VLAN interface in Interface mode.

Syntax

```
ipv6 mld snooping
no ipv6 mld snooping
```

Default By default, MLD Snooping is enabled both globally and on all VLANs.

Mode Global Configuration and Interface Configuration for a specified VLAN interface or a range of VLAN interfaces.

Usage For MLD Snooping to operate on particular VLAN interfaces, it must be enabled both globally by using this command in Global Configuration mode, and on individual VLAN interfaces by using this command in Interface Configuration mode (both are enabled by default).

MLD requires memory for storing data structures, as well as the hardware tables to implement hardware routing. As the number of ports, VLANs, static and dynamic groups increases then more memory is consumed. You can track the memory used for MLD with the command:

```
awplus# show memory pools nsm | grep MLD
```

Static and dynamic groups (LACP), ports and VLANs are not limited for MLD. For VLANs, this allows you to configure MLD across more VLANs with fewer ports per VLAN, or fewer VLANs with more ports per VLAN. For LACPs, you can configure MLD across more LACP groups with fewer ports per LACP, or fewer LACP groups with more ports per LACP.

Examples To configure MLD Snooping on the VLAN interfaces `vlan2-vlan4`, enter the following commands:

```
awplus# configure terminal
awplus(config)# interface vlan2-vlan4
awplus(config-if)# ipv6 mld snooping
```

To disable MLD Snooping for the VLAN interfaces `vlan2-vlan4`, enter the following commands:

```
awplus# configure terminal
awplus(config)# interface vlan2-vlan4
awplus(config)# no ipv6 mld snooping
```

To configure MLD Snooping globally for the device, enter the following commands:

```
awplus# configure terminal
awplus(config)# ipv6 mld snooping
```

To disable MLD Snooping globally for the device, enter the following commands:

```
awplus# configure terminal
awplus(config)# no ipv6 mld snooping
```

ipv6 mld snooping fast-leave

Overview Use this command to enable MLD Snooping fast-leave processing. Fast-leave processing is analogous to immediate-leave processing; the MLD group-membership is removed as soon as an MLD leave group message is received, without sending out a group-specific query.

Use the **no** variant of this command to disable fast-leave processing.

Syntax

```
ipv6 mld snooping fast-leave
no ipv6 mld snooping fast-leave
```

Default MLD Snooping fast-leave processing is disabled.

Mode Interface Configuration for a specified VLAN interface or a range of VLAN interfaces.

Usage This MLD Snooping command can only be configured on VLAN interfaces.

Examples This example shows how to enable fast-leave processing on the VLAN interface `vlan2`.

```
awplus# configure terminal
awplus(config)# interface vlan2
awplus(config-if)# ipv6 mld snooping fast-leave
```

This example shows how to enable fast-leave processing on the VLAN interface `vlan2- vlan4`.

```
awplus# configure terminal
awplus(config)# interface vlan2-vlan4
awplus(config-if)# ipv6 mld snooping fast-leave
```

ipv6 mld snooping mrouter

Overview Use this command to statically configure the specified port as a Multicast Router interface for MLD Snooping within the specified VLAN.

See detailed usage notes below to configure static multicast router ports when using static IPv6 multicast routes with EPSR, and the destination VLAN is an EPSR data VLAN.

Use the **no** variant of this command to remove the static configuration of the interface as a Multicast Router interface.

Syntax

```
ipv6 mld snooping mrouter interface <port>
no ipv6 mld snooping mrouter interface <port>
```

Parameter	Description
<port>	Specify the name of the port.

Mode Interface Configuration for a specified VLAN interface or a range of VLAN interfaces.

Usage This MLD Snooping command statically configures a switch port as a Multicast Router interface.

Note that if static IPv6 multicast routing is being used with EPSR and the destination VLAN is an EPSR data VLAN, then multicast router (mrouter) ports must be statically configured. This minimizes disruption for multicast traffic in the event of ring failure or restoration.

When configuring the EPSR data VLAN, statically configure mrouter ports so that the multicast router can be reached in either direction around the EPSR ring.

For example, if port1.0.1 and port1.0.6 are ports on an EPSR data VLAN vlan101, which is the destination for a static IPv6 multicast route, then configure both ports as multicast router (mrouter) ports as shown in the example commands listed below:

Output Figure 34-1: Example **ipv6 mld snooping mrouter** commands when static IPv6 multicast routing is being used and the destination VLAN is an EPSR data VLAN:

```
awplus>enable
awplus#configure terminal
awplus(config)#interface vlan101
awplus(config-if)#ipv6 mld snooping mrouter interface port1.0.1
awplus(config-if)#ipv6 mld snooping mrouter interface port1.0.6
```

Examples

This example shows how to specify the next-hop interface to the multicast router for VLAN interface `vlan2`:

```
awplus# configure terminal
awplus(config)# interface vlan2
awplus(config-if)# ipv6 mld snooping mrouter interface
port1.0.5
```

This example shows how to specify the next-hop interface to the multicast router for VLAN interfaces `vlan2-vlan4`:

```
awplus# configure terminal
awplus(config)# interface vlan2-vlan4
awplus(config-if)# ipv6 mld snooping mrouter interface
port1.0.5
```

Related Commands

ipv6 multicast route

ipv6 mld snooping querier

Overview Use this command to enable MLD querier operation on a subnet (VLAN) when no multicast routing protocol is configured in the subnet (VLAN). When enabled, the MLD Snooping querier sends out periodic MLD queries for all interfaces on that VLAN.

Use the **no** variant of this command to disable MLD querier configuration.

Syntax

```
ipv6 mld snooping querier
no ipv6 mld snooping querier
```

Mode Interface Configuration for a specified VLAN interface.

Usage This command can only be configured on a single VLAN interface - not on multiple VLANs.

The MLD Snooping querier uses the 0.0.0.0 Source IP address because it only masquerades as an MLD querier for faster network convergence.

The MLD Snooping querier does not start, or automatically cease, the MLD Querier operation if it detects query message(s) from a multicast router. It restarts as an MLD Snooping querier if no queries are seen within the other querier interval.

Do not enable MLD Snooping querier if you have already enabled MLD on your device.

Do not enable MLD Snooping querier on your device and then enable MLD afterwards.

Example

```
awplus# configure terminal
awplus(config)# interface vlan2
awplus(config-if)# ipv6 mld snooping querier
```

ipv6 mld snooping report-suppression

Overview Use this command to enable report suppression from hosts for Multicast Listener Discovery version 1 (MLDv1) on a VLAN in Interface Configuration mode.

Use the **no** variant of this command to disable report suppression on a VLAN in Interface Configuration mode.

Syntax

```
ipv6 mld snooping report-suppression
no ipv6 mld snooping report-suppression
```

Default Report suppression does not apply to MLDv2, and is turned on by default for MLDv1 reports.

Mode Interface Configuration for a specified VLAN interface or a range of VLAN interfaces.

Usage This MLD Snooping command can only be configured on VLAN interfaces.

MLDv1 Snooping maybe configured to suppress reports from hosts. When a querier sends a query, only the first report for particular set of group(s) from a host will be forwarded to the querier by the MLD Snooping device. Similar reports (to the same set of groups) from other hosts, which would not change group memberships in the querier, will be suppressed by the MLD Snooping device to prevent 'flooding' of query responses.

Examples This example shows how to enable report suppression for MLD reports on VLAN interface `vlan2`:

```
awplus# configure terminal
awplus(config)# interface vlan2
awplus(config-if)# ipv6 mld snooping report-suppression
```

This example shows how to disable report suppression for MLD reports on VLAN interface `vlan2`:

```
awplus# configure terminal
awplus(config)# interface vlan2
awplus(config-if)# no ipv6 mld snooping report-suppression
```

This example shows how to enable report suppression for MLD reports on VLAN interfaces `vlan2-vlan4`:

```
awplus# configure terminal
awplus(config)# interface vlan2-vlan4
awplus(config-if)# ipv6 mld snooping report-suppression
```

This example shows how to disable report suppression for MLD reports on VLAN interfaces `vlan2-vlan4`:

```
awplus# configure terminal
awplus(config)# interface vlan2-vlan4
awplus(config-if)# no ipv6 mld snooping report-suppression
```

ipv6 mld ssm-map enable

Overview Use this command to enable the Source Specific Multicast (SSM) mapping feature on the device.

Use the **no** variant of this command to disable the SSM mapping feature on the device.

Syntax

```
ipv6 mld ssm-map enable
no ipv6 mld ssm-map enable
```

Mode Global Configuration

Usage This command enables the SSM mapping feature for group members in the defined SSM range.

Example This example shows how to enable the MLD SSM mapping feature on the device.

```
awplus# configure terminal
awplus(config)# ipv6 mld ssm-map enable
```

ipv6 mld static-group

Overview Use this command to statically configure IPv6 group membership entries on an interface. To statically add only a group membership, do not specify any parameters.

Use the **no** variant of this command to delete static group membership entries.

Syntax

```
ipv6 mld static-group <ipv6-group-address> [source
<ipv6-source-address>] [interface <port>]
```

```
no ipv6 mld static-group <ipv6-group-address> [source
<ipv6-source-address>] [interface <port>]
```

Parameter	Description
<ipv6-group-address>	Specify a standard IPv6 Multicast group address to be configured as a static group member. The IPv6 address uses the format X:X::X:X.
<ipv6-source-address>	Optional. Specify a standard IPv6 source address to be configured as a static source from where multicast packets originate. The IPv6 address uses the format X:X::X:X.
<port>	Optional. Physical interface. This parameter specifies a physical port. If this parameter is used, the static configuration is applied to just to that physical interface. If this parameter is not used, the static configuration is applied on all ports in the VLAN.

Mode Interface Configuration for a VLAN interface.

Usage This command applies to MLD Snooping on a VLAN interface to statically add groups and/or source records.

Examples To add a static group record, use the following commands:

```
awplus# configure terminal
awplus(config)# interface vlan2
awplus(config-if)# ipv6 mld static-group ff1e::10
```

To add a static group and source record, use the following commands:

```
awplus# configure terminal
awplus(config)# interface vlan2
awplus(config-if)# ipv6 mld static-group ff1e::10 source
fe80::2fd:6cff:fe1c:b
```

To add a static group record on a specific port on vlan2, use the following commands:

```
awplus# configure terminal
awplus(config)# interface vlan2
awplus(config-if)# ipv6 mld static-group ff1e::10 interface
port1.0.4
```

ipv6 mld version

Overview Use this command to set the current MLD protocol version on an interface.

Use the **no** variant of this command to return to the default version on an interface.

Syntax

```
ipv6 mld version <version>
no ipv6 mld version
```

Parameter	Description
<version>	MLD protocol version number. Valid version numbers are 1 and 2

Default The default MLD protocol version number is 2.

Mode Interface Configuration for a VLAN interface.

Usage This command applies to interfaces configured for MLD Layer-3 multicast protocols and MLD Snooping. Note this command is intended for use where there is another querier (when there is another device with MLD enabled) on the same link that can only operate with MLD version 1. Otherwise, the default MLD version 2 is recommended for performance.

Example

```
awplus# configure terminal
awplus(config)# ipv6 forwarding
awplus(config)# ipv6 multicast-routing
awplus(config)# interface vlan2
awplus(config-if)# ipv6 enable
awplus(config-if)# ipv6 mld version 1
```

show debugging mld

Overview Use this command to display the MLD debugging modes enabled with the debug mld command.

For information on filtering and saving command output, see the "Getting Started with AlliedWare Plus" Feature Overview and Configuration Guide.

Syntax

```
show debugging mld
```

Mode Privileged Exec

Example

```
awplus# show debugging mld
```

Output

```
show debugging mld
MLD Debugging status:
  MLD Decoder debugging is on
  MLD Encoder debugging is on
  MLD Events debugging is on
  MLD FSM debugging is on
  MLD Tree-Info-Base (TIB) debugging is on
```

Related Commands debug mld

show ipv6 mld groups

Overview Use this command to display the multicast groups that have receivers directly connected to the router and learned through MLD.

For information on filtering and saving command output, see the "Getting Started with AlliedWare Plus" Feature Overview and Configuration Guide.

Syntax

```
show ipv6 mld groups [<ipv6-address>|<interface>] [detail]
```

Parameter	Description
<ipv6-address>	Optional. Specify Address of the multicast group in format X:X::X:X.
<interface>	Optional. Specify the Interface name for which to display local information.

Mode User Exec and Privileged Exec

Examples The following command displays local-membership information for all interfaces:

```
awplus# show ipv6 mld groups
```

Output Figure 34-2: Example output for **show ipv6 mld groups**

```
awplus#show ipv6 mld groups
MLD Connected Group Membership
Group Address                           Interface            Uptime   Expires
                  Last Reporter
ff08::1                                 vlan10 (port1.0.1)   00:07:27 00:03:10
                  fe80::200:1ff:fe20:b5ac
```

The following command displays local-membership information for all interfaces:

```
awplus# show ipv6 mld groups detail
```

show ipv6 mld interface

Overview Use this command to display the state of MLD and MLD Snooping for a specified interface, or all interfaces.

For information on filtering and saving command output, see the "Getting Started with AlliedWare Plus" Feature Overview and Configuration Guide.

Syntax

```
show ipv6 mld interface [<interface>]
```

Parameter	Description
<interface>	Interface name.

Mode User Exec and Privileged Exec

Example The following command displays MLD interface status on all interfaces enabled for MLD:

```
awplus# show ipv6 mld interface
```

Output

```
awplus#show ipv6 mld interface

Interface vlan1 (Index 301)
 MLD Enabled, Active, Querier, Version 2 (default)
 Internet address is fe80::215:77ff:fec9:7468
 MLD interface has 0 group-record states
 MLD activity: 0 joins, 0 leaves
 MLD robustness variable is 2
 MLD last member query count is 2
 MLD query interval is 125 seconds
 MLD querier timeout is 255 seconds
 MLD max query response time is 10 seconds
 Last member query response interval is 1000 milliseconds
 Group Membership interval is 260 seconds
 MLD Snooping is globally enabled
 MLD Snooping is enabled on this interface
 MLD Snooping fast-leave is not enabled
 MLD Snooping querier is enabled
 MLD Snooping report suppression is enabled
```

show ipv6 mld snooping mrouter

Overview Use this command to display the multicast router interfaces, both configured and learned, in a VLAN. If you do not specify a VLAN interface then all the VLAN interfaces are displayed.

For information on filtering and saving command output, see the "Getting Started with AlliedWare Plus" Feature Overview and Configuration Guide.

Syntax

```
show ipv6 mld snooping mrouter [<interface>]
```

Parameter	Description
<interface>	Optional. Specify the name of the VLAN interface. Note: If you do not specify a single VLAN interface, then all VLAN interfaces are shown.

Mode User Exec and Privileged Exec

Examples The following command displays the multicast router interfaces in `vlan2`:

```
awplus# show ipv6 mld snooping mrouter vlan2
```

Output

```
awplus#show ipv6 mld snooping mrouter vlan2
VLAN    Interface    Static/Dynamic
2       port1.0.2    Dynamically Learned
2       port1.0.3    Dynamically Learned
```

The following command displays the multicast router interfaces for all VLAN interfaces:

```
awplus# show ipv6 mld snooping mrouter
```

Output

```
awplus#show ipv6 mld snooping mrouter
VLAN    Interface    Static/Dynamic
2       port1.0.2    Dynamically Learned
2       port1.0.3    Dynamically Learned
3       port1.0.4    Statically Assigned
3       port1.0.5    Statically Assigned
```

show ipv6 mld snooping statistics

Overview Use this command to display MLD Snooping statistics data.

For information on filtering and saving command output, see the "Getting Started with AlliedWare Plus" Feature Overview and Configuration Guide.

Syntax

```
show ipv6 mld snooping statistics interface <interface>
```

Parameter	Description
<interface>	The name of the VLAN interface.

Mode User Exec and Privileged Exec

Example The following command displays MLDv2 statistical information for `vlan1`:

```
awplus# show ipv6 mld snooping statistics interface vlan1
```

Output

```
awplus#show ipv6 mld snooping statistics interface vlan1
MLD Snooping statistics for vlan1
Interface:      port1.0.1
Group:          ff08::1
Uptime:         00:02:18
Group mode:     Include ()
Last reporter:  fe80::eecd:6dff:fe6b:4783
Group source list: (R - Remote, M - SSM Mapping, S - Static )
  Source Address       Uptime    v2 Exp    Fwd  Flags
  2001:db8::1          00:02:18  00:02:02  Yes  R
  2001:db8::3          00:02:18  00:02:02  Yes  R
```

35 Multicast Commands

Introduction

Overview This chapter provides an alphabetical reference of multicast commands for configuring:

- IPv4 and IPv6 multicast forwarding
- IPv4 and IPv6 static multicast routes
- mroutes (routes back to a multicast source)

For commands for other multicast protocols, see:

- IGMP and IGMP Snooping Commands
- MLD and MLD Snooping Commands
- PIM-SM Commands
- PIM-SMv6 Commands

NOTE: *Before using PIM-SMv6 commands, IPv6 must be enabled on an interface with the ipv6 enable command, IPv6 forwarding must be enabled globally for routing IPv6 with the ipv6 forwarding command, and IPv6 multicasting must be enabled globally with the ipv6 multicast-routing command.*

Static IPv6 multicast routes take priority over dynamic IPv6 multicast routes. Use the clear ipv6 mroute command to clear static IPv6 multicast routes and ensure dynamic IPv6 multicast routes can take over from previous static IPv6 multicast routes.

The IPv6 Multicast addresses shown can be derived from IPv6 unicast prefixes as per RFC 3306. The IPv6 unicast prefix reserved for documentation is 2001:0db8::/32 as per RFC 3849. Using the base /32 prefix the IPv6 multicast prefix for 2001:0db8::/32 is ff3x:20:2001:0db8::/64. Where an RP address is 2001:0db8::1 the embedded RP multicast prefix is ff7x:120:2001:0db8::/96. For ASM (Any-Source Multicast) the IPV6 multicast addresses allocated for documentation purposes are ff0x::0db8:0:0/96 as per RFC 6676. This is a /96 prefix so that it can be used with group IDs as per RFC 3307. These addresses should not be used for practical networks (other than for testing purposes), nor should they appear in any public network.

The IPv6 addresses shown use the address space 2001:0db8::/32, defined in RFC 3849 for documentation purposes. These addresses should not be used for practical networks (other than for testing purposes) nor should they appear on any public network.

Command List

- "clear ip mroute" on page 1628
- "clear ip mroute statistics" on page 1629
- "clear ipv6 mroute" on page 1630
- "clear ipv6 mroute statistics" on page 1631
- "debug nsm mcast" on page 1632
- "debug nsm mcast6" on page 1633
- "ip mroute" on page 1634
- "ip multicast route" on page 1636
- "ip multicast route-limit" on page 1638
- "ip multicast wrong-vif-suppression" on page 1639
- "ip multicast-routing" on page 1640
- "ipv6 mroute" on page 1641
- "ipv6 multicast route" on page 1643
- "ipv6 multicast route-limit" on page 1645
- "ipv6 multicast-routing" on page 1646
- "multicast" on page 1647
- "show ip mroute" on page 1648
- "show ip mvif" on page 1650
- "show ip rpf" on page 1651
- "show ipv6 mroute" on page 1652
- "show ipv6 multicast forwarding" on page 1654
- "show ipv6 mif" on page 1655

clear ip mroute

Overview Use this command to delete entries from the IPv4 multicast routing table.

NOTE: *If you use this command, you should also use the clear ip igmp group command to clear IGMP group membership records.*

Syntax

```
clear ip mroute {*|<ipv4-group-address>
[<ipv4-source-address>]} [pim sparse-mode]
```

Parameter	Description
*	Deletes all multicast routes.
<ipv4-group-address>	Group IPv4 address, in dotted decimal notation in the format A.B.C.D.
<ipv4-source-address>	Source IPv4 address, in dotted decimal notation in the format A.B.C.D.
pim sparse-mode	Clear specified IPv4 multicast route(s) for PIM Sparse Mode only.

Mode Privileged Exec

Usage When this command is used, the Multicast Routing Information Base (MRIB) clears the IPv4 multicast route entries in its IPv4 multicast route table, and removes the entries from the multicast forwarder. The MRIB sends a “clear” message to the multicast protocols. Each multicast protocol has its own “clear” multicast route command. The protocol-specific “clear” command clears multicast routes from PIM Sparse Mode, and also clears the routes from the MRIB.

Examples

```
awplus# clear ip mroute 225.1.1.1 192.168.3.3
awplus# clear ip mroute *
```

Related Commands ip multicast route

show ip mroute

clear ip mroute statistics

Overview Use this command to delete multicast route statistics entries from the IP multicast routing table.

Syntax
```
clear ip mroute statistics {*|<ipv4-group-addr>
[<ipv4-source-addr>]}
```

Parameter	Description
*	All multicast route entries.
<ipv4-group-addr>	Group IPv4 address, in dotted decimal notation in the format A.B.C.D.
<ipv4-source-addr>	Source IPv4 address, in dotted decimal notation in the format A.B.C.D.

Mode Privileged Exec

Example
```
awplus# clear ip mroute statistics 225.1.1.2 192.168.4.4
awplus# clear ip mroute statistics *
```

clear ipv6 mroute

Overview Use this command to delete one or more dynamically-added route entries from the IPv6 multicast routing table.

You need to do this, for example, if you want to create a static route instead of an existing dynamic route.

Syntax

```
clear ipv6 mroute {*|<ipv6-group-address>
[<ipv6-source-address>]}
```

Parameter	Description
*	Deletes all dynamically-learned IPv6 multicast routes.
<ipv6-group-address>	Group IPv6 address, in hexadecimal notation in the format X.X::X.X.
<ipv6-source-address>	Source IPv6 address, in hexadecimal notation in the format X.X::X.X.

Mode Privileged Exec

Usage When this command is used, the Multicast Routing Information Base (MRIB) clears the relevant IPv6 multicast route entries in its IPv6 multicast route table, and removes the entries from the multicast forwarder. The MRIB sends a “clear” message to the multicast protocols. Each multicast protocol has its own “clear” multicast route command.

This command does not remove static routes from the routing table or the configuration. To remove static routes, use the **no** parameter of the command ipv6 multicast route.

Example

```
awplus# clear ipv6 mroute 2001::2 ff08::1
```

Related Commands ipv6 multicast route

show ipv6 mroute

clear ipv6 mroute statistics

Overview Use this command to delete multicast route statistics entries from the IPv6 multicast routing table.

NOTE: *Static IPv6 multicast routes take priority over dynamic IPv6 multicast routes. Use the clear ipv6 mroute command to clear static IPv6 multicast routes and ensure dynamic IPv6 multicast routes can take over from previous static IPv6 multicast routes.*

Syntax

```
clear ipv6 mroute statistics {*|<ipv6-group-address>
[<ipv6-source-address>]}
```

Parameter	Description
*	All multicast route entries.
<ipv6-group-addr>	Group IPv6 address, in hexadecimal notation in the format X.X::X.X.
<ipv6-source-addr>	Source IPv6 address, in hexadecimal notation in the format X.X::X.X.

Mode Privileged Exec

Examples

```
awplus# clear ipv6 mroute statistics 2001::2 ff08::1
awplus# clear ipv6 mroute statistics *
```

debug nsm mcast

Overview Use this command to debug IPv4 events in the Multicast Routing Information Base (MRIB).

This command is intended for use by Allied Telesis authorized service personnel for diagnostic purposes.

Syntax

```
debug nsm mcast
{all|fib-msg|mrt|mtrace|mtrace-detail|register|stats|vif}
```

Parameter	Description
`all`	All IPv4 multicast debugging.
`fib-msg`	Forwarding Information Base (FIB) messages.
`mrt`	Multicast routes.
`mtrace`	Multicast traceroute.
`mtrace-detail`	Multicast traceroute detailed debugging.
`register`	Multicast PIM register messages.
`stats`	Multicast statistics.
`vif`	Multicast interface.

Mode Privileged Exec and Global Configuration

Examples To enable debugging of all multicast route events, use the commands:

```
awplus# configure terminal
awplus(config)# debug nsm mcast all
```

To enable debugging of PIM register entries, use the commands:

```
awplus# configure terminal
awplus(config)# debug nsm mcast register
```

debug nsm mcast6

Overview Use this command to debug IPv6 events in the Multicast Routing Information Base (MRIB).

This command is intended for use by Allied Telesis authorized service personnel for diagnostic purposes.

Syntax

```
debug nsm mcast6 {all|fib-msg|mrt|register|stats|vif}
no debug nsm mcast6 {all|fib-msg|mrt|register|stats|vif}
```

Parameter	Description
`all`	All IPv6 multicast route debugging.
`fib-msg`	Forwarding Information Base (FIB) messages.
`mrt`	Multicast routes.
`register`	Multicast PIM register messages.
`stats`	Multicast statistics.
`vif`	Multicast interfaces.

Mode Privileged Exec and Global Configuration

Examples To enable debugging of all multicast route events, use the commands:

```
awplus# configure terminal
awplus(config)# debug nsm mcast6 all
```

To enable debugging of PIM register entries, use the commands:

```
awplus# configure terminal
awplus(config)# debug nsm mcast6 register
```

ip mroute

Overview Use this command to inform multicast of the RPF (Reverse Path Forwarding) route to a given IPv4 multicast source.

Use the **no** variant of this command to delete a route to an IPv4 multicast source.

Syntax

```
ip mroute <ipv4-source-address/mask-length>
[bgp|ospf|rip|static] <rpf-address> [<admin-distance>]
```

```
no ip mroute <ipv4-source-address/mask-length>
[bgp|ospf|rip|static]
```

Parameter	Description
<ipv4-source-address/mask-length>	A multicast source IPv4 address and mask length, in dotted decimal notation in the format A.B.C.D/M.
`bgp`	BGP unicast routing protocol.
`ospf`	OSPF unicast routing protocol.
`rip`	RIP unicast routing protocol.
`static`	Specifies a static route.
<rpf-address>	A.B.C.D The closest known address on the multicast route back to the specified source. This host IPv4 address can be within a directly connected subnet or within a remote subnet. In the case that the address is in a remote subnet, a lookup is done from the unicast route table to find the next hop address on the path to this host.
<admin-distance>	The administrative distance. Use this to determine whether the RPF lookup selects the unicast or multicast route. Lower distances have preference. If the multicast static route has the same distance as the other RPF sources, the multicast static route takes precedence. The default is `0` and the range available is `0-255`.

Mode Global Configuration

Usage Typically, when a Layer 3 multicast routing protocol is determining the RPF (Reverse Path Forwarding) interface for the path to an IPv4 multicast source, it uses the unicast route table to find the best path to the source. However, in some networks a deliberate choice is made to send multicast via different paths to those used for unicast. In this case, the interface via which a multicast stream from a given source enters a router may not be the same as the interface that connects to the best unicast route to that source.

This command enables the user to statically configure the device with “multicast routes” back to given sources. When performing the RPF check on a stream from a given IPv4 source, the multicast routing protocol will look at these static entries as well as looking into the unicast routing table. The route with the lowest

administrative distance - whether a static “multicast route” or a route from the unicast route table - will be chosen as the RPF route to the source.

Note that in this context the term “multicast route” does not imply a route via which the current router will forward multicast; instead it refers to the route the multicast will have traversed in order to arrive at the current router.

Examples The following example creates a static multicast IPv4 route back to the sources in the `10.10.3.0/24` subnet. The multicast route is via the host `192.168.2.3`, and has an administrative distance of `2`:

```
awplus# configure terminal
awplus(config)# ip mroute 10.10.3.0/24 static 2 192.168.2.3 2
```

The following example creates a static multicast IPv4 route back to the sources in the `192.168.3.0/24`subnet. The multicast route is via the host `10.10.10.50`. The administrative distance on this route has the default value of `0`:

```
awplus# configure terminal
awplus(config)# ip mroute 192.168.3.0/24 10.10.10.50
```

Validation Commands show ip rpf

ip multicast route

Overview Use this command to add an IPv4 static multicast route for a specific multicast source and group IPv4 address to the multicast Routing Information Base (RIB). This IPv4 multicast route is used to forward multicast traffic from a specific source and group ingressing on an upstream VLAN to a single or range of downstream VLANs.

Use the **no** variant of this command to either remove an IPv4 static multicast route set with this command or to remove a specific downstream VLAN interface from an IPv4 static multicast route for a specific multicast source and group IPv4 address.

Syntax

```
ip multicast route <ipv4-source-addr> <ipv4-group-addr>
<upstream-vlan-id> [<downstream-vlan-id>]

no ip multicast route <ipv4-source-addr> <ipv4-group-addr>
[<upstream-vlan-id> <downstream-vlan-id>]
```

Parameter	Description
<ipv4-source-addr>	Source IPv4 address, in dotted decimal notation in the format A.B.C.D.
<ipv4-group-addr>	Group IPv4 address, in dotted decimal notation in the format A.B.C.D.
<upstream-vlan-id>	Upstream VLAN interface on which the multicast packets ingress.
<downstream-vlan-id>	Downstream VLAN interface or range of VLAN interfaces to which the multicast packets are sent.

Default By default, this feature is disabled.

Mode Global Configuration

Usage Only one multicast route entry per IPv4 address and multicast group can be specified. Therefore, if one entry for a static multicast route is configured, PIM will not be able to update this multicast route in any way.

If a dynamic multicast route exists you cannot create a static multicast route with same source IPv4 address, group IPv4 address, upstream VLAN and downstream VLANs. An error message is displayed and logged. To add a new static multicast route, either wait for the dynamic multicast route to timeout or clear the dynamic multicast route with the clear ip mroute command.

To update an existing static multicast route entry with more or a new set of downstream VLANs, you must firstly remove the existing static multicast route and then add the new static multicast route with all downstream VLANs specified. If you attempt to update an existing static multicast route entry with an additional VLAN or VLANs an error message is displayed and logged.

To create a blackhole or null route where packets from a specified source and group address coming from an upstream VLAN are dropped rather than

forwarded, do not specify the optional <*downstream-vlan-id*> parameter when entering this command.

To remove a specific downstream VLAN from an existing static multicast route entry, specify the VLAN you want to remove with the `<downstream-vlan-id>` parameter when entering the **no** variant of this command.

Examples To create a static multicast route for the multicast source IPv4 address `2.2.2.2` and group IPv4 address `224.9.10.11`, specifying the upstream VLAN interface as `vlan10` and the downstream VLAN interface as `vlan20`, use the following commands:

```
awplus# configure terminal
awplus(config)# ip multicast route 2.2.2.2 224.9.10.11 vlan10
vlan20
```

To create a blackhole route for the multicast source IPv4 address `2.2.2.2` and group IPv4 address `224.9.10.11`, specifying the upstream VLAN interface as `vlan10`, use the following commands:

To create an IPv4 static multicast route for the multicast source IPv4 address `2.2.2.2` and group IP address `224.9.10.11`, specifying the upstream VLAN interface as `vlan10` and the downstream VLAN range as `vlan20-25`, use the following commands:

```
awplus# configure terminal
awplus(config)# ip multicast route 2.2.2.2 224.9.10.11 vlan10
vlan20-25
```

To remove the downstream VLAN `23` from the IPv4 static multicast route created with the above command, use the following commands:

```
awplus# configure terminal
awplus(config)# no ip multicast route 2.2.2.2 224.9.10.11
vlan10 vlan23
```

To delete an IPv4 static multicast route for the multicast source IP address `2.2.2.2` and group IP address `224.9.10.11`, use the following commands:

```
awplus# configure terminal
awplus(config)# no ip multicast route 2.2.2.2 224.9.10.11
```

Related Commands clear ip mroute

show ip mroute

ip multicast route-limit

Overview Use this command to limit the number of multicast routes that can be added to an IPv4 multicast routing table.

Use the **no** variant of this command to return the IPv4 route limit to the default.

Syntax

```
ip multicast route-limit <limit> [<threshold>]
no ip multicast route-limit
```

Parameter	Description
<limit>	*<1-2147483647>* Number of routes.
<threshold>	*<1-2147483647>* Threshold above which to generate a warning message. The mroute warning threshold must not exceed the mroute limit.

Default The default limit and threshold value is 2147483647.

Mode Global Configuration

Usage This command limits the number of multicast IPv4 routes (mroutes) that can be added to a router, and generates an error message when the limit is exceeded. If the threshold parameter is set, a threshold warning message is generated when this threshold is exceeded, and the message continues to occur until the number of mroutes reaches the limit set by the limit argument.

Examples

```
awplus# configure terminal
awplus(config)# ip multicast route-limit 34 24
awplus# configure terminal
awplus(config)# no ip multicast route-limit
```

ip multicast wrong-vif-suppression

Overview Use this command to prevent unwanted multicast packets received on an unexpected VLAN being trapped to the CPU.

Use the no variant of this command to disable wrong VIF suppression.

Syntax

```
ip ip multicast wrong-vif-suppression
no ip multicast wrong-vif-suppression
```

Default By default, this feature is disabled.

Mode Global Configuration

Usage Use this command if there is excessive CPU load and multicast traffic is enabled. To confirm that VIF messages are being sent to the CPU use the debug nsm mcast6 command.

Examples To enable the suppression of wrong VIF packets, use the following commands:

```
awplus# configure terminal
awplus(config)# ip multicast wrong-vif-suppression
```

To disable the suppression of wrong VIF packets, use the following commands:

```
awplus# configure terminal
awplus(config)# no ip multicast wrong-vif-suppression
```

ip multicast-routing

Overview Use this command to turn on/off IPv4 multicast routing on the router; when turned off the device does not perform multicast functions.

Use the **no** variant of this command to disable IPv4 multicast routing after enabling it. Note the default stated below.

Syntax

```
ip multicast-routing
no ip multicast-routing
```

Default By default, IPv4 multicast routing is off.

Mode Global Configuration

Usage When the **no** variant of this command is used, the Multicast Routing Information Base (MRIB) cleans up Multicast Routing Tables (MRT), stops IGMP operation, and stops relaying multicast forwarder events to multicast protocols.

When multicast routing is enabled, the MRIB starts processing any MRT addition/deletion requests, and any multicast forwarding events.

You must enable multicast routing before issuing other multicast commands.

Example

```
awplus# configure terminal
awplus(config)# ip multicast-routing
```

Validation Commands show running-config

ipv6 mroute

Overview Use this command to inform multicast of the RPF (Reverse Path Forwarding) route to a given IPv6 multicast source.

Use the **no** variant of this command to delete a route to an IPv6 multicast source.

JC - 25/6/12 - added missing IPI IPv6 multicast commands that have been in since 5.4.1 as undocumented and unregistered CLI commands but have been available in 5.4.1/5.4.2 sw - this is out for 542-25 but should be added back in for 543 - check in with Team Zeta on it

Syntax

```
ipv6 mroute <ipv6-source-address/mask-length> [rip|static]
<rpf-address> [<admin-distance>]

no ipv6 mroute <ipv6-source-address/mask-length> [rip|static]
```

Parameter	Description
<ipv6-source-address/mask-length>	A multicast source IPv6 address and mask length, in hexadecimal notation in the format X.X::X.X/M.
`rip`	RIPng IPv6 unicast routing protocol.
`static`	Specifies a static route.
<rpf-address>	X.X::X:X The closest known address on the IPv6 multicast route back to the specified source. This host IPv6 address can be within a directly connected subnet or within a remote subnet. In the case that the address is in a remote subnet, a lookup is done from the unicast route table to find the nexthop address on the path to this host.
<admin-distance>	The administrative distance. Use this to determine whether the RPF lookup selects the unicast or multicast route. Lower distances have preference. If the multicast static route has the same distance as the other RPF sources, the multicast static route takes precedence. The default is `0` and the range available is `0-255`.

Mode Global Configuration

Usage Typically, when a Layer 3 multicast routing protocol is determining the RPF (Reverse Path Forwarding) interface for the path to a multicast source, it uses the unicast IPv6 route table to find the best path to the source. However, in some networks a deliberate choice is made to send multicast via different paths to those used for unicast. In this case, the interface via which a multicast stream from a given source enters a router may not be the same as the interface that connects to the best unicast route to that source.

This command enables the user to statically configure the switch with “multicast routes” back to given sources. When performing the RPF check on a stream from a

given IPv6 source, the multicast routing protocol will look at these static entries as well as looking into the unicast routing table. The route with the lowest administrative distance - whether a static “multicast route” or a route from the unicast route table - will be chosen as the RPF route to the source.

Note that in this context the term “multicast route” does not imply a route via which the current router will forward multicast; instead it refers to the route the multicast will have traversed in order to arrive at the current router.

Examples The following example creates a static multicast route back to the sources in the `2001::1/64` subnet. The multicast route is via the host `2002::2`, and has an administrative distance of `2`:

```
awplus# configure terminal
awplus(config)# ipv6 mroute 2001::1/64 static 2 2002::2
```

The following example creates a static multicast route back to the sources in the 2002::2/64subnet. The multicast route is via the host 2001::1. The administrative distance on this route has the default value of `0`:

```
awplus# configure terminal
awplus(config)# ipv6 mroute 2002::2/64 2001::1
```

Validation Commands show ipv6 mroute

ipv6 multicast route

Overview Use this command to add an IPv6 static multicast route for a specific multicast source and group IPv6 address to the multicast Routing Information Base (RIB). This IPv6 multicast route is used to forward IPv6 multicast traffic from a specific source and group ingressing on an upstream VLAN to a single or range of downstream VLANs.

See detailed usage notes below to configure static multicast router ports when using static IPv6 multicast routes with EPSR, and the destination VLAN is an EPSR data VLAN.

Use the **no** variant of this command to either remove an IPv6 static multicast route set with this command or to remove a specific downstream VLAN interface from an IPv6 static multicast route for a specific IPv6 multicast source and group address.

Syntax

```
ipv6 multicast route <ipv6-source-addr> <ipv6-group-addr>
<upstream-vlan-id> [<downstream-vlan-id>]
```

```
no ipv6 multicast route <ipv6-source-addr> <ipv6-group-addr>
[<upstream-vlan-id> <downstream-vlan-id>]
```

Parameter	Description
<ipv6-group-addr>	Source IPv6 address, in dotted decimal notation in the format X.X::X.X.
<ipv6-group-addr>	Group IP address, in dotted decimal notation in the format X.X::X.X.
<upstream-vlan-id>	Upstream VLAN interface on which the multicast packets ingress.
<downstream-vlan-id>	Downstream VLAN interface or range of VLAN interfaces to which the multicast packets are sent.

Default By default, no static routes exist.

Mode Global Configuration

Usage Only one multicast route entry per IPv6 address and multicast group can be specified. Therefore, if one entry for an IPv6 static multicast route is configured, PIM will not be able to update this multicast route in any way.

If a dynamic multicast route exists, you cannot create a static multicast route with the same source IPv6 address and group IPv6 address. An error message is displayed and logged. To add a new static multicast route, either wait for the dynamic multicast route to time out or clear the dynamic multicast route with the clear ipv6 mroute command.

To update an existing IPv6 static multicast route entry with new or additional downstream VLANs, you must firstly remove the existing static multicast route and then add the new static multicast route with all downstream VLANs specified. If

you attempt to update an existing static multicast route entry with an additional VLAN or VLANs an error message is displayed and logged.

To remove a specific downstream VLAN from an existing static multicast route entry, specify the VLAN you want to remove with the `<downstream-vlan-id>` parameter when entering the **no** variant of this command.

Note that if static IPv6 multicast routing is being used with EPSR and the destination VLAN is an EPSR data VLAN, then multicast router (mrouter) ports must be statically configured. This minimizes disruption for multicast traffic in the event of ring failure or restoration.

When configuring the EPSR data VLAN, statically configure mrouter ports so that the multicast router can be reached in either direction around the EPSR ring.

See ipv6 mld snooping mrouter for a command description and command examples.

Examples

To create an IPv6 static multicast route for the multicast source IPv6 address `2001::1` and group IPv6 address `ff08::1`, specifying the upstream VLAN interface as `vlan10` and the downstream VLAN interface as `vlan20`, use the following commands:

```
awplus# configure terminal
awplus(config)# ipv6 multicast route 2001::1 ff08::1 vlan10
vlan20
```

To create a blackhole route for the IPv6 multicast source IP address 2001::1 and group IP address ff08::1, specifying the upstream VLAN interface as `vlan10`, use the following commands:

To create an IPv6 static multicast route for the multicast source IPv6 address 2001::1 and group IPv6 address ff08::1, specifying the upstream VLAN interface as `vlan10` and the downstream VLAN range as `vlan20-25`, use the following commands:

```
awplus# configure terminal
awplus(config)# ipv6 multicast route 2001::1 ff08::1 vlan10
vlan20-25
```

To remove the downstream VLAN `23` from the IPv6 static multicast route created with the above command, use the following commands:

```
awplus# configure terminal
awplus(config)# no ipv6 multicast route 2001::1 ff08::1 vlan10
vlan23
```

To delete an IPv6 static multicast route for the multicast source IPv6 address 2001::1 and group IPv6 address ff08::1, use the following commands:

```
awplus# configure terminal
awplus(config)# no ipv6 multicast route 2001::1 ff08::1
```

Related Commands

clear ipv6 mroute

ipv6 mld snooping mrouter

show ipv6 mroute

ipv6 multicast route-limit

Overview Use this command to limit the number of multicast routes that can be added to an IPv6 multicast routing table.

Use the no variant of this command to return the IPv6 route limit to the default.

Syntax

```
ipv6 multicast route-limit <limit> [<threshold>]
no ipv6 multicast route-limit
```

Parameter	Description
<limit>	*<1-2147483647>* Number of routes.
<threshold>	*<1-2147483647>* Threshold above which to generate a warning message. The mroute warning threshold must not exceed the mroute limit.

Default The default limit and threshold value is 2147483647.

Mode Global Configuration

Usage This command limits the number of multicast IPv6 routes (mroutes) that can be added to a router, and generates an error message when the limit is exceeded. If the threshold parameter is set, a threshold warning message is generated when this threshold is exceeded, and the message continues to occur until the number of mroutes reaches the limit set by the limit argument.

Examples

```
awplus# configure terminal
awplus(config)# ipv6 multicast route-limit 34 24
awplus# configure terminal
awplus(config)# no ipv6 multicast route-limit
```

ipv6 multicast-routing

Overview Use this command to turn on/off IPv6 multicast routing on the router; when turned off the device does not perform multicast functions.

Use the **no** variant of this command to disable IPv6 multicast routing after enabling it. Note the default stated below.

Syntax
```
ipv6 multicast-routing
no ipv6 multicast-routing
```

Default By default, IPv6 multicast routing is off.

Mode Global Configuration

Usage When the **no** variant of this command is used, the Multicast Routing Information Base (MRIB) cleans up Multicast Routing Tables (MRT, and stops relaying multicast forwarder events to multicast protocols.

When multicast routing is enabled, the MRIB starts processing any MRT addition/deletion requests, and any multicast forwarding events.

You must enable multicast routing before issuing other multicast commands.

Examples
```
awplus# configure terminal
awplus(config)# ipv6 multicast-routing
awplus# configure terminal
awplus(config)# no ipv6 multicast-routing
```

Validation Commands show running-config

multicast

Overview Use this command to enable a device port to route multicast packets that ingress the port.

Use the **no** variant of this command to stop the device port from routing multicast packets that ingress the port. Note that this does not affect Layer 2 forwarding of multicast packets. If you enter **no multicast** on a port, multicast packets received on that port will not be forwarded to other VLANs, but ports in the same VLANs as the receiving port will still receive the multicast packets.

CAUTION: *We do not recommend disabling multicast routing in a live network. Some non-multicast protocols use multicast packets and will not function correctly if you disable it.*

Syntax

```
multicast
no multicast
```

Default By default, all device ports route multicast packets.

Mode Interface Configuration

Examples To disable routing of multicast packets on a port, use the commands:

```
awplus# configure terminal
awplus(config)# interface port1.0.1
awplus(config-if)# no multicast
```

To re-enable routing of multicast packets on a port, use the commands:

```
awplus# configure terminal
awplus(config)# interface port1.0.1
awplus(config-if)# multicast
```

Validation Commands show running-config

show ip mroute

Overview Use this command to display the contents of the IPv4 multicast routing (mroute) table.

Syntax
```
show ip mroute [<ipv4-group-addr>] [<ipv4-source-addr>]
[{dense|sparse}] [{count|summary}]
```

Parameter	Description
<ipv4-group-addr>	Group IPv4 address, in dotted decimal notation in the format A.B.C.D.
<ipv4-source-addr>	Source IPv4 address, in dotted decimal notation in the format A.B.C.D.
`dense`	Display dense IPv4 multicast routes.
`sparse`	Display sparse IPv4 multicast routes.
`count`	Display the route and packet count from the IPv4 multicast routing (mroute) table.
`summary`	Display the contents of the IPv4 multicast routing (mroute) table in an abbreviated form.

Mode User Exec and Privileged Exec

Examples
```
awplus# show ip mroute 10.10.3.34 224.1.4.3
awplus# show ip mroute 10.10.5.24 225.2.2.2 count
awplus# show ip mroute 10.10.1.34 summary
```

Output The following is a sample output of this command displaying the IPv4 multicast routing table, with and without specifying the group and source IPv4 address:

Figure 35-1: Example output from the **show ip mroute** command

```
awplus# show ip mroute
IP Multicast Routing Table
Flags: I - Immediate Stat, T - Timed Stat, F - Forwarder
installed
Timers: Uptime/Stat Expiry
Interface State: Interface (TTL)

(10.10.1.52, 224.0.1.3), uptime 00:00:31, stat expires 00:02:59
Owner PIM-SM, Flags: TF
  Incoming interface: vlan2
  Outgoing interface list:
   vlan3 (1)
```

Figure 35-2: Example output from the **show ip mroute** command with the source and group IPv4 address specified

```
awplus# show ip mroute 10.10.1.52 224.0.1.3

IP Multicast Routing Table
Flags: I - Immediate Stat, T - Timed Stat, F - Forwarder
installed
Timers: Uptime/Stat Expiry
Interface State: Interface (TTL)

(10.10.1.52, 224.0.1.3), uptime 00:03:24, stat expires 00:01:28
Owner PIM-SM, Flags: TF
  Incoming interface: vlan2
  Outgoing interface list:
    vlan3 (1)
```

The following is a sample output of this command displaying the packet count from the IPv4 multicast routing table:

Figure 35-3: Example output from the **show ip mroute count** command

```
awplus# show ip mroute count
IP Multicast Statistics
Total 1 routes using 132 bytes memory
Route limit/Route threshold: 2147483647/2147483647
Total NOCACHE/WRONGVIF/WHOLEPKT recv from fwd: 1/0/0
Total NOCACHE/WRONGVIF/WHOLEPKT sent to clients: 1/0/0
Immediate/Timed stat updates sent to clients: 0/0
Reg ACK recv/Reg NACK recv/Reg pkt sent: 0/0/0
Next stats poll: 00:01:10

Forwarding Counts: Pkt count/Byte count, Other Counts: Wrong If
pkts
Fwd msg counts: WRONGVIF/WHOLEPKT recv
Client msg counts: WRONGVIF/WHOLEPKT/Imm Stat/Timed Stat sent
Reg pkt counts: Reg ACK recv/Reg NACK recv/Reg pkt sent

(10.10.1.52, 224.0.1.3), Forwarding: 2/19456, Other: 0
  Fwd msg: 0/0, Client msg: 0/0/0/0,  Reg: 0/0/0
```

The following is a sample output for this command displaying the IPv4 multicast routing table in an abbreviated form:

Figure 35-4: Example output from the **show ip mroute summary** command

```
awplus# show ip mroute summary

IP Multicast Routing Table
Flags: I - Immediate Stat, T - Timed Stat, F - Forwarder
installed
Timers: Uptime/Stat Expiry
Interface State: Interface (TTL)

(10.10.1.52, 224.0.1.3), 00:01:32/00:03:20, PIM-SM, Flags: TF
```

show ip mvif

Overview Use this command to display the contents of the IPv4 Multicast Routing Information Base (MRIB) VIF table.

Syntax

```
show ip mvif <interface>
```

Parameter	Description
<interface>	The interface to display information about.

Mode User Exec and Privileged Exec

Example

```
awplus# show ip mvif vlan2
```

Output Figure 35-5: Example output from the **show ip mvif** command

```
Interface     Vif   Owner     TTL  Local             Remote          Uptime
              Idx   Module         Address           Address
vlan2         0     PIM-SM    1    192.168.1.53      0.0.0.0         00:04:26
Register      1               1    192.168.1.53      0.0.0.0         00:04:26
vlan3         2     PIM-SM    1    192.168.10.53     0.0.0.0         00:04:25
```

Figure 35-6: Example output from the **show ip mvif** command with the interface parameter **vlan2** specified

```
Interface    Vif   Owner     TTL  Local             Remote            Uptime
             Idx   Module         Address           Address
vlan2        0     PIM-SM    1    192.168.1.53      0.0.0.0           00:05:17
```

show ip rpf

Overview Use this command to display Reverse Path Forwarding (RPF) information for the specified IPv4 source address.

Syntax

```
show ip rpf <source-addr>
```

Parameter	Description
<source-addr>	Source IPv4 address, in dotted decimal notation in the format A.B.C.D.

Mode User Exec and Privileged Exec

Example

```
awplus# show ip rpf 10.10.10.50
```

show ipv6 mroute

Overview Use this command to display the contents of the IPv6 multicast routing (mroute) table.

Syntax

```
show ipv6 mroute [<ipv6-group-addr>] [<ipv6-source-addr>]
[{count|summary}]
```

Parameter	Description
<ipv6-group-addr>	Group IPv6 address, in hexadecimal notation in the format X.X::X.X.
<ipv6-source-addr>	Source IPv6 address, in hexadecimal notation in the format X.X::X.X.
`count`	Display the route and packet count from the IPv6 multicast routing (mroute) table.
`summary`	Display the contents of the IPv6 multicast routing (mroute) table in an abbreviated form.

Mode User Exec and Privileged Exec

Examples

```
awplus# show ipv6 mroute
awplus# show ipv6 mroute count
awplus# show ipv6 mroute summary
awplus# show ipv6 mroute 2001::2 ff08::1 count
awplus# show ipv6 mroute 2001::2 ff08::1
awplus# show ipv6 mroute 2001::2 summary
```

Output The following is a sample output of this command displaying the IPv6 multicast routing table for a single static IPv6 Multicast route:

Figure 35-7: Example output from the **show ipv6 mroute** command

```
awplus#show ipv6 mroute
IPv6 Multicast Routing Table
Flags: I - Immediate Stat, T - Timed Stat, F - Forwarder
installed
Timers: Uptime/Stat Expiry
Interface State: Interface
(2001::2, ff08::1), uptime 03:18:38
Owner IMI, Flags: F
  Incoming interface: vlan2
  Outgoing interface list:
    vlan3
```

The following is a sample output of this command displaying the IPv6 multicast routing count table for a single static IPv6 Multicast route:

Figure 35-8: Example output from the **show ipv6 mroute count** command

```
awplus#show ipv6 mroute count

IPv6 Multicast Statistics
Total 1 routes using 152 bytes memory
Route limit/Route threshold: 1024/1024
Total NOCACHE/WRONGmif/WHOLEPKT recv from fwd: 6/0/0
Total NOCACHE/WRONGmif/WHOLEPKT sent to clients: 6/0/0
Immediate/Timed stat updates sent to clients: 0/0
Reg ACK recv/Reg NACK recv/Reg pkt sent: 0/0/0
Next stats poll: 00:01:14

Forwarding Counts: Pkt count/Byte count, Other Counts: Wrong If
pkts
Fwd msg counts: WRONGmif/WHOLEPKT recv
Client msg counts: WRONGmif/WHOLEPKT/Imm Stat/Timed Stat sent
Reg pkt counts: Reg ACK recv/Reg NACK recv/Reg pkt sent

(2001::2, ff08::1), Forwarding: 0/0, Other: 0
  Fwd msg: 0/0, Client msg: 0/0/0/0,  Reg: 0/0/0
```

The following is a sample output of this command displaying the IPv6 multicast routing summary table for a single static IPv6 Multicast route:

Figure 35-9: Example output from the **show ipv6 mroute summary** command

```
awplus#show ipv6 mroute summary
IPv6 Multicast Routing Table
Flags: I - Immediate Stat, T - Timed Stat, F - Forwarder
installed
Timers: Uptime/Stat Expiry
Interface State: Interface

(2001::2, ff08::1), 03:20:28/-, IMI, Flags: F
```

show ipv6 multicast forwarding

Overview Use this command to view the status of multicast forwarding slow-path-packet setting.

Syntax

```
show ipv6 multicast forwarding
```

Mode User Exec

Example To show the status of the multicast forwarding, slow-path-packet setting, use the following command:

```
awplus# show ipv6 multicast forwarding
```

Output Figure 35-10: Example output from the **show ipv6 multicast forwarding** command:

```
ipv6 multicast forwarding is disabled
```

Related Commands ipv6 multicast forward-slow-path-packet

show ipv6 mif

Overview Use this command to display the contents of the IPv6 Multicast Routing Information Base (MRIB) MIF table.

Syntax

```
show ipv6 mif [<interface>]
```

Parameter	Description
<interface>	The interface to display information about.

Mode User Exec and Privileged Exec

Example

```
awplus# show ipv6 mif
awplus# show ipv6 mif vlan2
```

Output Figure 35-11: Example output from the **show ipv6 mif** command

```
awplus#show ipv6 mif
Interface    Mif   Owner            Uptime
             Idx   Module
vlan3        0     MLD/MLD Proxy-Service 03:28:48
vlan2        1     MLD/MLD Proxy-Service 03:28:48
vlan1        2     MLD/MLD Proxy-Service 03:28:48
```

Figure 35-12: Example output from the **show ipv6 mif** command with the interface parameter **vlan2** specified

```
Interface    Mif   Owner    TTL   Remote            Uptime
             Idx   Module         Address
vlan2        0     PIM-SMv6   1    0.0.0.0          00:05:17
```

36 PIM-SM Commands

Introduction

Overview This chapter provides an alphabetical reference of PIM-SM commands. For commands common to PIM-SM and PIM-DM, see the Multicast Commands chapter.

Command List

- "clear ip pim sparse-mode bsr rp-set *" on page 1658
- "clear ip pim sparse-mode packet statistics" on page 1659
- "clear ip mroute pim sparse-mode" on page 1660
- "debug pim sparse-mode" on page 1661
- "debug pim sparse-mode timer" on page 1662
- "ip pim anycast-rp" on page 1664
- "ip pim bsr-border" on page 1665
- "ip pim bsr-candidate" on page 1666
- "ip pim cisco-register-checksum" on page 1667
- "ip pim crp-cisco-prefix" on page 1668
- "ip pim dr-priority" on page 1669
- "ip pim exclude-genid" on page 1670
- "ip pim ext-srcs-directly-connected" on page 1671
- "ip pim hello-holdtime (PIM-SM)" on page 1672
- "ip pim hello-interval (PIM-SM)" on page 1673
- "ip pim ignore-rp-set-priority" on page 1674
- "ip pim jp-timer" on page 1675
- "ip pim register-rate-limit" on page 1676
- "ip pim register-rp-reachability" on page 1677

- "ip pim register-source" on page 1678
- "ip pim register-suppression" on page 1679
- "ip pim rp-address" on page 1680
- "ip pim rp-candidate" on page 1681
- "ip pim rp-register-kat" on page 1682
- "ip pim sparse-mode" on page 1683
- "ip pim sparse-mode passive" on page 1684
- "ip pim spt-threshold" on page 1685
- "ip pim ssm" on page 1686
- "show debugging pim sparse-mode" on page 1687
- "show ip pim sparse-mode bsr-router" on page 1688
- "show ip pim sparse-mode interface" on page 1689
- "show ip pim sparse-mode interface detail" on page 1691
- "show ip pim sparse-mode local-members" on page 1692
- "show ip pim sparse-mode mroute" on page 1693
- "show ip pim sparse-mode mroute detail" on page 1695
- "show ip pim sparse-mode neighbor" on page 1697
- "show ip pim sparse-mode nexthop" on page 1698
- "show ip pim sparse-mode packet statistics" on page 1699
- "show ip pim sparse-mode rp-hash" on page 1700
- "show ip pim sparse-mode rp mapping" on page 1701
- "undebug all pim sparse-mode" on page 1702

clear ip pim sparse-mode bsr rp-set *

Overview Use this command to clear all Rendezvous Point (RP) sets learned through the PIMv2 Bootstrap Router (BSR).

Syntax

```
clear ip pim sparse-mode bsr rp-set *
```

Parameter	Description
*	Clears all RP sets.

Mode Privileged Exec

Usage For multicast clients, note that one router will be automatically or statically designated as the RP, and all routers must explicitly join through the RP. A Designated Router (DR) sends periodic Join/Prune messages toward a group-specific RP for each group that it has active members.

For multicast sources, note that the Designated Router (DR) unicasts Register messages to the RP encapsulating the data packets from the multicast source. The RP forwards decapsulated data packets toward group members.

Example

```
awplus# clear ip pim sparse-mode bsr rp-set *
```

clear ip pim sparse-mode packet statistics

Overview Use this command to clear the PIM sparse mode packet statistics counter.

Syntax

```
clear ip pim sparse-mode packet statistics
```

Mode Privileged Exec

Example The following command clears the current packet receive counts for PIM sparse-mode:

```
awplus# configure terminal
awplus(config)# clear ip pim sparse-mode statistics
```

Output Figure 36-1: Example output from **clear ip pim sparse-mode statistics**

```
awplus(config)#clear ip pim sparse-mode statistics
PIM-SM Receive Packet Statistics :
All PIM-SM    :   Total : 0   Valid : 0
Hello         :   Total : 0   Valid : 0
Register      :   Total : 0   Valid : 0
Register Stop :   Total : 0   Valid : 0
Join/Prune    :   Total : 0   Valid : 0
Bootstrap     :   Total : 0   Valid : 0
Assert        :   Total : 0   Valid : 0
Candidate-RP  :   Total : 0   Valid : 0
```

Related Commands show ip pim sparse-mode packet statistics

clear ip mroute pim sparse-mode

Overview Use this command to clear all multicast route table entries learned through PIM-SM for a specified multicast group address, and optionally a specified multicast source address.

Syntax

```
clear ip mroute <Group-IP-address> pim sparse-mode
clear ip mroute <Group-IP-address> <Source-IP-address> pim sparse-mode
```

Parameter	Description
<Group-IP-address>	Specify a multicast group IPv6 address, entered in the form A.B.C.D.
<Source-IP-address>	Specify a source group IP address, entered in the form A.B.C.D.

Mode Privileged Exec

Example

```
awplus# clear ip mroute  pim sparse-mode 224.0.0.0
awplus# clear ip mroute  192.168.7.1 pim sparse-mode 224.0.0.0
```

debug pim sparse-mode

Overview Use this command to turn on some or all PIM-SM debugging.

Use the **no** variant of this command to turn off some or all PIM-SM debugging.

Syntax

```
debug pim sparse-mode [all] [events] [mfc] [mib] [nexthop] [nsm]
[packet] [state] [mtrace]
```

```
no debug pim sparse-mode [all] [events] [mfc] [mib] [nexthop]
[nsm] [packet] [state] [mtrace]
```

Parameter	Description
`all`	Activates/deactivates all PIM-SM debugging.
`events`	Activates debug printing of events.
`mfc`	Activates debug printing of MFC (Multicast Forwarding Cache in kernel) add/delete/updates.
`mib`	Activates debug printing of PIM-SM MIBs.
`nexthop`	Activates debug printing of PIM-SM next hop communications.
`nsm`	Activates debugging of PIM-SM Network Services Module communications.
`packet`	Activates debug printing of incoming and/or outgoing packets.
`state`	Activates debug printing of state transition on all PIM-SM FSMs.
`mtrace`	Activates debug printing of multicast traceroute.

Mode Privileged Exec and Global Configuration

Example

```
awplus# configure terminal
awplus(config)# debug pim sparse-mode all
```

Related Commands show debugging pim sparse-mode

debug pim sparse-mode timer

Overview Use this command to enable debugging for the specified PIM-SM timers.

Use the **no** variants of this command to disable debugging for the specified PIM-SM timers.

Syntax

```
debug pim sparse-mode timer assert [at]
no debug pim sparse-mode timer assert [at]
debug pim sparse-mode timer bsr [bst|crp]
no debug pim sparse-mode timer bsr [bst|crp]
debug pim sparse-mode timer hello [ht|nlt|tht]
no debug pim sparse-mode timer hello [ht|nlt|tht]
debug pim sparse-mode timer joinprune [jt|et|ppt|kat|ot]
no debug pim sparse-mode timer joinprune [jt|et|ppt|kat|ot]
debug pim sparse-mode timer register [rst]
no debug pim sparse-mode timer register [rst]
```

Parameter	Description
`assert`	Enable or disable debugging for the Assert timers.
`at`	Enable or disable debugging for the Assert Timer.
`bsr`	Enable or disable debugging for the specified Bootstrap Router timer, or all Bootstrap Router timers.
`bst`	Enable or disable debugging for the Bootstrap Router: Bootstrap Timer.
`crp`	Enable or disable debugging for the Bootstrap Router: Candidate-RP Timer.
`hello`	Enable or disable debugging for the specified Hello timer, or all Hello timers.
`ht`	Enable or disable debugging for the Hello timer: Hello Timer.
`nlt`	Enable or disable debugging for the Hello timer: Neighbor Liveness Timer.
`tht`	Enable or disable debugging for the Hello timer: Triggered Hello Timer.
`joinprune`	Enable or disable debugging for the specified JoinPrune timer, or all JoinPrune timers.
`jt`	Enable or disable debugging for the JoinPrune timer: upstream Join Timer.
`et`	Enable or disable debugging for the JoinPrune timer: Expiry Timer.
`ppt`	Enable or disable debugging for the JoinPrune timer: PrunePending Timer.

Parameter	Description
`kat`	Enable or disable debugging for the JoinPrune timer: KeepAlive Timer.
`ot`	Enable or disable debugging for the JoinPrune timer: Upstream Override Timer.
`register`	Enable or disable debugging for the Register timers.
`rst`	Enable or disable debugging for the Register timer: Register Stop Timer.

Default By default, all debugging is disabled.

Mode Privileged Exec and Global Configuration

Examples To enable debugging for the PIM-SM Bootstrap Router bootstrap timer, use the commands:

```
awplus(config)# debug pim sparse-mode timer bsr bst
```

To enable debugging for the PIM-SM Hello: neighbor liveness timer, use the command:

```
awplus(config)# debug pim sparse-mode timer hello ht
```

To enable debugging for the PIM-SM Joinprune expiry timer, use the command:

```
awplus# debug pim sparse-mode timer joinprune et
```

To disable debugging for the PIM-SM Register timer, use the command:

```
awplus# no debug pim sparse-mode timer register
```

Related Commands show debugging pim sparse-mode

ip pim anycast-rp

Overview Use this command to configure Anycast RP (Rendezvous Point) in a RP set.

Use the **no** variant of this command to remove the configuration.

Syntax

```
ip pim anycast-rp <anycast-rp-address> <member-rp-address>
no ip pim anycast-rp <anycast-rp-address> [<member-rp-address>]
```

Parameter	Description
<anycast-rp-address>	<A.B.C.D> Specify an anycast IP address to configure an Anycast RP (Rendezvous Point) in a RP set.
<member-rp-address>	<A.B.C.D> Specify an Anycast RP (Rendezvous Point) address to configure an Anycast RP in a RP set.

Mode Global Configuration

Usage Anycast is a network addressing and routing scheme where data is routed to the nearest or best destination as viewed by the routing topology. Compared to unicast with a one-to- one association between network address and network endpoint, and multicast with a one-to-many association between network address and network endpoint; anycast has a one-to-many association between network address and network endpoint. For anycast, each destination address identifies a set of receiver endpoints, from which only one receiver endpoint is chosen.

Anycast is often implemented using BGP to simultaneously advertise the same destination IP address range from many sources, resulting in packets address to destination addresses in this range being routed to the nearest source announcing the given destination IP address.

Use this command to specify the Anycast RP configuration in the Anycast RP set. Use the **no** variant of this command to remove the Anycast RP configuration. Note that the member RP address is optional when using the **no** parameter to remove the Anycast RP configuration. removing the anycast RP address also removes the member RP address.

Examples The following example shows how to configure the Anycast RP address with **ip pim anycast-rp**:

```
awplus# configure terminal
awplus(config)# ip pim anycast-rp 1.1.1.1 10.10.10.10
```

The following example shows how to remove the Anycast RP in the RP set specifying only the anycast RP address with **no ip pim anycast-rp**, but not specifying the member RP address:

```
awplus# configure terminal
awplus(config)# no ip pim anycast-rp 1.1.1.1
```

ip pim bsr-border

Overview Use the **ip pim bsr-border** command to prevent Bootstrap Router (BSR) messages from being sent or received through a VLAN interface. The BSR border is the border of the PIM domain.

Use the **no** variant of this command to disable the configuration set with **ip pim bsr-border**.

Syntax

```
ip pim bsr-border
no ip pim bsr-border
```

Mode Interface Configuration for a VLAN interface or a PPP interface.

Usage When this command is configured on a VLAN interface, no PIM version 2 BSR messages will be sent or received through the interface. Configure an interface bordering another PIM domain with this command to avoid BSR messages from being exchanged between the two PIM domains.

BSR messages should not be exchanged between different domains, because devices in one domain may elect Rendezvous Points (RPs) in the other domain, resulting in loss of isolation between the two PIM domains that would stop the PIM protocol from working as intended.

Examples The following example configures the VLAN interface vlan2 to be the PIM domain border:

```
awplus# configure terminal
awplus(config)# interface vlan2
awplus(config-if)# ip pim bsr-border
```

The following example removes the VLAN interface vlan2 from the PIM domain border:

```
awplus# configure terminal
awplus(config)# interface vlan2
awplus(config-if)# no ip pim bsr-border
```

The following example configures the PPP interface ppp0 to be the PIM domain border:

```
awplus# configure terminal
awplus(config)# interface ppp0
awplus(config-if)# ip pim bsr-border
```

The following example removes the PPP interface ppp0 from the PIM domain border:

```
awplus# configure terminal
awplus(config)# interface ppp0
awplus(config-if)# no ip pim bsr-border
```

ip pim bsr-candidate

Overview Use this command to give the device the candidate BSR (Bootstrap Router) status using the specified IP address mask of the interface.

Use the **no** variant of this command to withdraw the address of the interface from being offered as a BSR candidate.

Syntax

```
ip pim bsr-candidate <interface> [<hash>] [<priority>]
no ip pim bsr-candidate [<interface>]
```

Parameter	Description
<interface>	The interface. For instance, `vlan2`.
<hash>	<0-32> configure hash mask length for RP selection. The default hash value if you do not configure this parameter is 10.
<priority>	<0-255> configure priority for a BSR candidate. Note that you must also specify the <*hash*> (mask length) when specifying the <*priority*>. The default priority if you do not configure this parameter is 64.

Mode Global Configuration

Default The default hash parameter value is 10 and the default priority parameter value is 64.

Examples To set the BSR candidate to the VLAN interface vlan2, with the optional mask length and BSR priority parameters, enter the commands shown below:

```
awplus# configure terminal
awplus(config)# ip pim bsr-candidate vlan2 20 30
```

To withdraw the address of vlan2 from being offered as a BSR candidate, enter:

```
awplus# configure terminal
awplus(config)# no ip pim bsr-candidate vlan2
```

To set the BSR candidate to the PPP interface ppp0, with the optional mask length and BSR priority parameters, enter the commands shown below:

```
awplus# configure terminal
awplus(config)# ip pim bsr-candidate ppp0 20 30
```

To withdraw the address of ppp0 from being offered as a BSR candidate, enter:

```
awplus# configure terminal
awplus(config)# no ip pim bsr-candidate ppp0
```

ip pim cisco-register-checksum

Overview Use this command to configure the option to calculate the Register checksum over the whole packet. This command is used to inter-operate with older Cisco IOS versions.

Use the **no** variant of this command to disable this option.

Syntax
```
ip pim cisco-register-checksum
no ip pim cisco-register-checksum
```

Default This command is disabled by default. By default, Register Checksum is calculated only over the header.

Mode Global Configuration

Example
```
awplus# configure terminal
awplus(config)# ip pim cisco-register-checksum
```

ip pim crp-cisco-prefix

Overview Use this command to interoperate with Cisco devices that conform to an earlier draft standard. Some Cisco devices might not accept candidate RPs with a group prefix number of zero. Note that the latest BSR specification prohibits sending RP advertisements with prefix 0. RP advertisements for the default IPv4 multicast group range 224/4 are sent with a prefix of 1.

Use the **no** variant of this command to revert to the default settings.

Syntax

```
ip pim crp-cisco-prefix
no ip pim crp-cisco-prefix
```

Mode Global Configuration

Usage Cisco's BSR code does not conform to the latest BSR draft. It does not accept candidate RPs with a group prefix number of zero. To make the candidate RP work with a Cisco BSR, use the **ip pim crp-cisco-prefix** command when interoperating with older versions of Cisco IOS.

Example

```
awplus# configure terminal
awplus(config)# ip pim crp-cisco-prefix
awplus# configure terminal
awplus(config)# no ip pim crp-cisco-prefix
```

Related Commands ip pim rp-candidate

ip pim dr-priority

Overview Use this command to set the Designated Router priority value.

Use the **no** variant of this command to disable this function.

Syntax

```
ip pim dr-priority  <priority>
no ip pim dr-priority [<priority>]
```

Parameter	Description
<priority>	<0-4294967294> The Designated Router priority value. A higher value has a higher preference.

Default The default is 1. The negated form of this command restores the value to the default.

Mode Interface Configuration for a VLAN interface or a PPP interface.

Examples To set the Designated Router priority value to 11234 for the VLAN interface vlan2, apply the commands as shown below:

```
awplus# configure terminal
awplus(config)# interface vlan2
awplus(config-if)# ip pim dr-priority 11234
```

To disable the Designated Router priority value for the VLAN interface vlan2, apply the commands as shown below:

```
awplus# configure terminal
awplus(config)# interface vlan2
awplus(config-if)# no ip pim dr-priority
```

To set the Designated Router priority value to 11234 for the PPP interface ppp0, apply the commands as shown below:

```
awplus# configure terminal
awplus(config)# interface ppp0
awplus(config-if)# ip pim dr-priority 11234
```

To disable the Designated Router priority value for the PPP interface ppp0, apply the commands as shown below:

```
awplus# configure terminal
awplus(config)# interface ppp0
awplus(config-if)# no ip pim dr-priority
```

Related Commands ip pim ignore-rp-set-priority

ip pim exclude-genid

Overview Use this command to exclude the GenID option from Hello packets sent out by the PIM module on a particular interface.This command is used to inter-operate with older Cisco IOS versions.

Use the **no** variant of this command to revert to default settings.

Syntax
```
ip pim exclude-genid
no ip pim exclude-genid
```

Default By default, this command is disabled; the GenID option is included.

Mode Interface Configuration for a VLAN interface or a PPP interface.

Example
```
awplus# configure terminal
awplus(config)# interface vlan2
awplus(config-if)# ip pim exclude-genid
awplus# configure terminal
awplus(config)# interface ppp0
awplus(config-if)# ip pim exclude-genid
```

ip pim ext-srcs-directly-connected

Overview Use this command to configure PIM to treat all source traffic arriving on the interface as though it was sent from a host directly connected to the interface.

Use the **no** variant of this command to configure PIM to treat only directly connected sources as directly connected.

Syntax

```
ip pim ext-srcs-directly-connected
no ip pim ext-srcs-directly-connected
```

Default The **no** variant of this command is the default behavior.

Mode Interface Configuration for a VLAN interface or a PPP interface.

Example To configure PIM to treat all sources as directly connected for VLAN interface vlan2, use the following commands:

```
awplus# configure terminal
awplus(config)# interface vlan2
awplus(config-if)# ip pim ext-srcs-directly-connected
```

To configure PIM to treat only directly connected sources as directly connected for VLAN interface vlan2, use the following commands:

```
awplus# configure terminal
awplus(config)# interface vlan2
awplus(config-if)# no ip pim ext-srcs-directly-connected
```

To configure PIM to treat all sources as directly connected for PPP interface ppp0, use the following commands:

```
awplus# configure terminal
awplus(config)# interface ppp0
awplus(config-if)# ip pim ext-srcs-directly-connected
```

To configure PIM to treat only directly connected sources as directly connected for PPP interface ppp0, use the following commands:

```
awplus# configure terminal
awplus(config)# interface ppp0
awplus(config-if)# no ip pim ext-srcs-directly-connected
```

ip pim hello-holdtime (PIM-SM)

Overview This command configures a hello-holdtime value. You cannot configure a hello-holdtime value that is less than the current hello-interval.

Use the **no** variant of this command to return it to its default of 3.5 * the current hello-interval.

Syntax

```
ip pim hello-holdtime <holdtime>
no ip pim hello-holdtime
```

Parameter	Description
<holdtime>	<1-65535> The holdtime value in seconds (no fractional seconds are accepted).

Default The default hello-holdtime value is 3.5 * the current hello-interval. The default hello- holdtime is restored using the negated form of this command.

Mode Interface Configuration for a VLAN interface or a PPP interface.

Usage Each time the hello interval is updated, the hello holdtime is also updated, according to the following rules:

If the hello holdtime is not configured; or if the hello holdtime is configured and less than the current hello-interval value, it is modified to the (3.5 * hello interval). Otherwise, it retains the configured value.

Example

```
awplus# configure terminal
awplus(config)# interface vlan2
awplus(config-if)# ip pim hello-holdtime 123
awplus# configure terminal
awplus(config)# interface ppp0
awplus(config-if)# ip pim hello-holdtime 123
```

ip pim hello-interval (PIM-SM)

Overview This command configures a hello-interval value.

Use the **no** variant of this command to reset the hello-interval to the default.

Syntax

```
ip pim hello-interval <interval>
no ip pim hello-interval
```

Parameter	Description
<interval>	<1-65535> The value in seconds (no fractional seconds accepted).

Default The default hello-interval value is 30 seconds. The default is restored using the negated form of this command.

Mode Interface Configuration for a VLAN interface or a PPP interface.

Usage When the hello interval is configured, and the hello holdtime is not configured, or when the configured hello-holdtime value is less than the new hello-interval value; the holdtime value is modified to the (3.5 * hello interval). Otherwise, the hello-holdtime value is the configured value.

Example

```
awplus# configure terminal
awplus(config)# interface vlan2
awplus(config-if)# ip pim hello-interval 123
awplus# configure terminal
awplus(config)# interface ppp0
awplus(config-if)# ip pim hello-interval 123
```

ip pim ignore-rp-set-priority

Overview Use this command to ignore the RP-SET priority value, and use only the hashing mechanism for RP selection.

This command is used to inter-operate with older Cisco IOS versions.

Use the **no** variant of this command to disable this setting.

Syntax

```
ip pim ignore-rp-set-priority
no ip pim ignore-rp-set-priority
```

Mode Global Configuration

Example

```
awplus# configure terminal
awplus(config)# ip pim ignore-rp-set-priority
```

ip pim jp-timer

Overview Use this command to set the PIM-SM join/prune timer. Note that the value the device puts into the holdtime field of the join/prune packets it sends to its neighbors is 3.5 times the join/prune timer value set using this command.

Use the **no** variant of this command to return the PIM-SM join/prune timer to its default value of 60 seconds, which corresponds to a join/prune packet holdtime of 210 seconds.

Syntax

```
ip pim jp-timer <1-65535>
no ip pim jp-timer [<1-65535>]
```

Parameter	Description
<1-65535>	Specifies the join/prune timer value. The default value is 60 seconds.

Default The default join/prune timer value is 60 seconds.

Mode Global Configuration

Example To set the join/prune timer value to 300 seconds, use the commands:

```
awplus# configure terminal
awplus(config)# ip pim jp-timer 300
```

To return the join/prune timer to its default value of 60 seconds, use the commands:

```
awplus# configure terminal
awplus(config)# no ip pim jp-timer
```

ip pim register-rate-limit

Overview Use this command to configure the rate of register packets sent by this DR, in units of packets per second.

Use the **no** variant of this command to remove the limit.

Syntax

```
ip pim register-rate-limit <1-65535>
no ip pim register-rate-limit
```

Parameter	Description
<1-65535>	Specifies the maximum number of packets that can be sent per second.

Mode Global Configuration

Example

```
awplus# configure terminal
awplus(config)# ip pim register-rate-limit 3444
```

ip pim register-rp-reachability

Overview Use this command to enable the RP reachability check for PIM Register processing at the DR. The default setting is no checking for RP-reachability.

Use the **no** variant of this command to disable this processing.

Syntax
```
ip pim register-rp-reachability
no ip pim register-rp-reachability
```

Default This command is disabled; by default, there is no checking for RP-reachability.

Mode Global Configuration

Example
```
awplus# configure terminal
awplus(config)# ip pim register-rp-reachability
```

ip pim register-source

Overview Use this command to configure the source address of register packets sent by this DR, overriding the default source address, which is the address of the RPF interface toward the source host.

Use the **no** variant of this command to un-configure the source address of Register packets sent by this DR, reverting back to use the default source address that is the address of the RPF interface toward the source host.

Syntax

```
ip pim register-source [<source_address>|<interface>]
no ip pim register-source
```

Parameter	Description
<source_address>	The IP address, entered in the form A.B.C.D, to be used as the source of the register packets.
<interface>	The name of the interface to be used as the source of the register packets.

Usage The configured address must be a reachable address to be used by the RP to send corresponding Register-Stop messages in response. It is normally the local loopback interface address, but can also be a physical address. This address must be advertised by unicast routing protocols on the DR. The configured interface does not have to be PIM enabled.

Mode Global Configuration

Example

```
awplus# configure terminal
awplus(config)# ip pim register-source 10.10.1.3
```

ip pim register-suppression

Overview Use this command to configure the register-suppression time, in seconds, overriding the default of 60 seconds. Configuring this value modifies register-suppression time at the DR. Configuring this value at the RP modifies the RP-keepalive-period value if the ip pim rp-register-kat command is not used.

Use the **no** variant of this command to reset the value to its default of 60 seconds.

Syntax
```
ip pim register-suppression <1-65535>
no ip pim register-suppression
```

Mode Global Configuration

Example
```
awplus# configure terminal
awplus(config)# ip pim register-suppression 192
```

ip pim rp-address

Overview Use this command to statically configure RP (Rendezvous Point) address for multicast groups.

Use the **no** variant of this command to remove a statically configured RP (Rendezvous Point) address for multicast groups.

Syntax

```
ip pim rp-address <ip-address> [override]
no ip pim rp-address <ip-address> [override]
```

Parameter	Description
`<ip-address>`	IP address of Rendezvous Point, entered in the form `A.B.C.D`.
`override`	Enables statically defined RPs to override dynamically learned RPs.

Mode Global Configuration

Usage The AlliedWare Plus PIM-SM implementation supports multiple static RPs. It also supports usage of static-RP and BSR mechanism simultaneously. The **ip pim rp-address** command is used to statically configure the RP address for multicast groups.

You need to understand the following information before using this command.

If the RP-address that is configured by the BSR, and the RP-address that is configured statically, are both available for a group range, then the RP-address configured through BSR is chosen over the statically configured RP-address.

Group mode and RP address mappings learned through BSR take precedence over mappings statistically defined by the ip pim rp-address command. Commands with the override keyword take precedence over dynamically learned mappings.

Example

```
awplus# configure terminal
awplus(config)# ip pim rp-address 192.168.3.4 4
```

Related Commands ip pim rp-candidate

ip pim rp-register-kat

ip pim rp-candidate

Overview Use this command to make the router an RP (Rendezvous Point) candidate, using the IP address of the specified interface.

Use the **no** variant of this command to remove the RP status set using the **ip pim rp-candidate** command.

Syntax

```
ip pim rp-candidate <interface> [priority <priority> | interval
<interval> ]
```

```
no ip pim rp-candidate [<interface>]
```

Parameter	Description
<interface>	Interface name
<priority>	<0-255> configure priority for an RP candidate.
<interval>	advertisement interval specified in the range <1-16383> (in seconds).

Default The priority value for a candidate RP is 0 by default until specified using the **priority** parameter.

Mode Global Configuration

Usage Note that issuing the command **ip pim rp-candidate** *<interface>* without optional **priority**, **interval**, or **grouplist** parameters will configure the candidate RP with a priority value of 0.

Examples To specify a priority of 3, use the following commands:

```
awplus# configure terminal
awplus(config)# ip pim rp-candidate vlan2 priority 3
```

To stop the device from being an RP candidate on vlan2 , use the following commands:

```
awplus# configure terminal
awplus(config)# no ip pim rp-candidate vlan2
```

Related Commands

ip pim rp-address

ip pim rp-register-kat

ip pim crp-cisco-prefix

ip pim rp-register-kat

Overview Use this command to configure the Keep Alive Time (KAT) for (S,G) states at the RP (Rendezvous Point) to monitor PIM-SM Register packets.

Use the **no** variant of this command to return the PIM-SM KAT timer to its default value of 210 seconds.

Syntax

```
ip pim rp-register-kat <1-65535>
no ip pim rp-register-kat
```

Parameter	Description
<1-65535>	Specify the KAT timer in seconds. The default value is 210 seconds.

Mode Global Configuration

Default The default PIM-SM KAT timer value is 210 seconds.

Examples

```
awplus# configure terminal
awplus(config)# ip pim rp-register-kat 3454
awplus# configure terminal
awplus(config)# no ip pim rp-register-kat
```

Related Commands ip pim rp-address

ip pim rp-candidate

ip pim sparse-mode

Overview Use this command to enable PIM-SM on the VLAN interface.

Use the **no** variant of this command to disable PIM-SM on the VLAN interface.

Syntax

```
ip pim sparse-mode
no ip pim sparse-mode
```

Mode Interface Configuration for a VLAN interface or a PPP interface.

Examples

```
awplus# configure terminal
awplus(config)# interface vlan2
awplus(config-if)# ip pim sparse-mode
awplus# configure terminal
awplus(config)# interface vlan2
awplus(config-if)# no ip pim sparse-mode
awplus# configure terminal
awplus(config)# interface ppp0
awplus(config-if)# ip pim sparse-mode
awplus# configure terminal
awplus(config)# interface ppp0
awplus(config-if)# no ip pim sparse-mode
```

ip pim sparse-mode passive

Overview Use this command to enable and disable passive mode operation for local members on the VLAN interface.

Use the **no** variant of this command to disable passive mode operation for local members on the VLAN interface.

Syntax

```
ip pim sparse-mode passive
no ip pim sparse-mode passive
```

Mode Interface Configuration for a VLAN interface or a PPP interface.

Usage Passive mode essentially stops PIM transactions on the interface, allowing only IGMP mechanism to be active. To turn off passive mode, use the **no ip pim sparse-mode passive** or the ip pim sparse-mode command. To turn off PIM activities on the VLAN interface, use the **no ip pim sparse-mode** command.

Examples

```
awplus# configure terminal
awplus(config)# interface vlan2
awplus(config-if)# ip pim sparse-mode passive
awplus# configure terminal
awplus(config)# interface vlan2
awplus(config-if)# no ip pim sparse-mode passive
awplus# configure terminal
awplus(config)# interface ppp0
awplus(config-if)# ip pim sparse-mode passive
awplus# configure terminal
awplus(config)# interface ppp0
awplus(config-if)# no ip pim sparse-mode passive
```

ip pim spt-threshold

Overview This command turns on the ability for the last-hop PIM router to switch to SPT (shortest-path tree).

The **no** variant of this command turns off the ability for the last-hop PIM router to switch to SPT.

NOTE: *The switching to SPT happens either at the receiving of the first data packet, or not at all; it is not rate-based.*

Syntax

```
ip pim spt-threshold
no ip pim spt-threshold
```

Mode Global Configuration

Examples To enable the last-hop PIM-SM router to switch to SPT, use the following commands:

```
awplus# configure terminal
awplus(config)# ip pim spt-threshold
```

To stop the last-hop PIM-SM router from being able to switch to SPT, use the following commands:

```
awplus# configure terminal
awplus(config)# no ip pim spt-threshold
```

ip pim ssm

Overview Use this command to define the Source Specific Multicast (SSM) range of IP multicast addresses. The default keyword defines the SSM range as 232/8.

Use the **no** variant of this command to disable the SSM range.

Syntax

```
ip pim ssm default
no ip pim ssm
```

Default By default, the command is disabled.

Mode Global Configuration

Usage When an SSM range of IP multicast addresses is defined by the ip pim ssm command, the no (*,G) or (S,G,rpt) state will be initiated for groups in the SSM range.

The messages corresponding to these states will not be accepted or originated in the SSM range.

Examples The following commands show how to set PIM-SSM as default:

```
awplus# configure terminal
awplus(config)# ip pim ssm default
```

The following commands show how to disable PIM-SSM:

```
awplus# configure terminal
awplus(config)# no ip pim ssm
```

show debugging pim sparse-mode

Overview This command displays the status of the debugging of the system.

For information on filtering and saving command output, see the "Getting Started with AlliedWare Plus" Feature Overview and Configuration Guide.

Syntax

```
show debugging pim sparse-mode
```

Mode User Exec and Privileged Exec

Example To display PIM-SM debugging settings, use the command:

```
awplus# show debugging pim sparse-mode
```

Figure 36-2: Output from **show debugging pim sparse-mode**

```
Debugging status:
  PIM event debugging is on
  PIM Hello THT timer debugging is on
  PIM event debugging is on
  PIM MFC debugging is on
  PIM state debugging is on
  PIM packet debugging is on
  PIM incoming packet debugging is on
  PIM outgoing packet debugging is on
```

Related Commands debug pim sparse-mode

show ip pim sparse-mode bsr-router

Overview Use this command to show the Bootstrap Router (BSR) (v2) address.

For information on filtering and saving command output, see the "Getting Started with AlliedWare Plus" Feature Overview and Configuration Guide.

Syntax

```
show ip pim sparse-mode bsr-router
```

Mode User Exec and Privileged Exec

Output Figure 36-3: Output from the **show ip pim sparse-mode bsr-router** command

```
PIMv2 Bootstrap information
  BSR address: 10.10.11.35 (?)
  Uptime:      00:00:38, BSR Priority: 0, Hash mask length: 10
  Expires:     00:01:32
  Role: Non-candidate BSR
  State: Accept Preferred
```

Related Commands

show ip pim sparse-mode rp mapping

show ip pim sparse-mode neighbor

show ip pim sparse-mode interface

Overview Use this command to show PIM-SM interface information.

For information on filtering and saving command output, see the "Getting Started with AlliedWare Plus" Feature Overview and Configuration Guide

Syntax

```
show ip pim sparse-mode interface
```

Mode User Exec and Privileged Exec

Example To display information about PIM-SM interfaces, use the command:

```
awplus# show ip pim sparse-mode interface
```

Output Figure 36-4: Example output from **show ip pim sparse-mode interface**

```
Total configured interfaces: 16   Maximum allowed: 31
Total active interfaces:     12

Address         Interface VIFindex Ver/   Nbr    DR          DR
                                   Mode   Count  Prior
192.168.1.53    vlan2     0        v2/S   2      2       192.168.1.53
192.168.10.53   vlan3     2        v2/S   0      2       192.168.10.53

... Note that this screen has been edited to remove any additional interfaces.
```

Table 1: Parameters in the output from the **show ip pim sparse-mode interface** command

Parameters	Description
`Total configured interfaces`	The number of configured PIM Sparse Mode interfaces.
`Maximum allowed`	The maximum number of PIM Sparse Mode interfaces that can be configured.
`Total active interfaces`	The number of active PIM Sparse Mode interfaces.
`Address`	Primary PIM-SM address.
`Interface`	Name of the PIM-SM interface.
`VIF Index`	The Virtual Interface index of the VLAN.
`Ver/Mode`	PIM version/Sparse mode.
`Nbr Count`	Neighbor count of the PIM-SM interface.

Table 1: Parameters in the output from the **show ip pim sparse-mode interface** command (cont.)

Parameters	Description
`DR Priority`	Designated Router priority.
`DR`	The IP address of the Designated Router.

Related Commands

ip pim sparse-mode

show ip pim sparse-mode rp mapping

show ip pim sparse-mode neighbor

show ip pim sparse-mode interface detail

Overview Use this command to show detailed information on a PIM-SM interface.

For information on filtering and saving command output, see the "Getting Started with AlliedWare Plus" Feature Overview and Configuration Guide.

Syntax

```
show ip pim sparse-mode interface detail
```

Mode User Exec and Privileged Exec

Output Figure 36-5: Example output from the **show ip pim sparse-mode interface detail** command

```
vlan3 (vif 3):
  Address 192.168.1.149, DR 192.168.1.149
  Hello period 30 seconds, Next Hello in 15 seconds
  Triggered Hello period 5 seconds
  Neighbors:
   192.168.1.22

vlan2 (vif 0):
  Address 10.10.11.149, DR 10.10.11.149
  Hello period 30 seconds, Next Hello in 18 seconds
  Triggered Hello period 5 seconds
  Neighbors:
   10.10.11.4
```

show ip pim sparse-mode local-members

Overview Use this command to show detailed local member information on a VLAN interface configured for PIM-SM. If you do not specify a VLAN interface then detailed local member information is shown for all VLAN interfaces configured for PIM-SM.

For information on filtering and saving command output, see the "Getting Started with AlliedWare Plus" Feature Overview and Configuration Guide.

Syntax

```
show ip pim sparse-mode local-members [<interface>]
```

Parameter	Description
<interface>	Optional. Specify the interface. For instance, VLAN interface `vlan2`.

Mode User Exec and Privileged Exec

Example To show detailed PIM-SM information for all PIM-SM configured VLAN interfaces, use the command:

```
awplus# show ip pim sparse-mode local-members
```

Output Figure 36-6: Example output from the **show ip pim sparse-mode local-members** command

```
awplus#show ip pim sparse-mode local-members
PIM Local membership information

vlan1:
    (*, 224.0.0.4) : Include

vlan203:
    (*, 223.0.0.3) : Include
```

Example To show detailed PIM-SMv6 information for the PIM-SM configured interface vlan1, use the command:

```
awplus# show ip pim sparse-mode local-members vlan1
```

Output Figure 36-7: Example output from the **show ip pim sparse-mode local-members vlan1** command

```
awplus#show ip pim sparse-mode local-members vlan1
PIM Local membership information

vlan1:
    (*, 224.0.0.4) : Include
```

show ip pim sparse-mode mroute

Overview Use this command to display the IP multicast routing table or the IP multicast routing table based on a specific address or addresses.

Syntax

```
show ip pim sparse-mode mroute [<group-address>]
show ip pim sparse-mode mroute [<source-address>]
show ip pim sparse-mode mroute [<source-address>
<group-address>]
```

Parameter	Description
<group-address>	Group IP address, entered in the form A.B.C.D. Output is all multicast entries belonging to that group.
<source-address>	Source IP address, entered in the form A.B.C.D. Output is all multicast entries belonging to that source.

Mode Privileged Exec

Usage Note that when a feature license is enabled, the output for the **show ip pim sparse-mode mroute** command will only show 32 interfaces because of the terminal display width limit. Use the **show ip pim sparse-mode mroute detail** command to display detailed entries of the IP multicast routing table.

Example To display the IP multicast routing table for the address 40. 40. 40.11, enter the command:

```
awplus# show ip pim sparse-mode mroute 40.40.40.11
```

Output Figure 36-8: Example output from **show ip pim sparse-mode mroute**

```
awplus#show ip pim sparse-mode mroute
IP Multicast Routing Table
(*,*,RP) Entries: 0
(*,G) Entries: 1
(S,G) Entries: 0
(S,G,rpt) Entries: 0
FCR Entries: 1
(*, 224.0.1.3)
RP: 10.10.5.153
RPF nbr: 192.168.1.152
RPF idx: vlan2
Upstream State: JOINED
Local ..............................
Joined ..j..........................
Asserted ...........................
FCR:
Source: 10.10.1.52
Outgoing ..o........................
KAT timer running, 144 seconds remaining
Packet count 1
```

Related Commands show ip pim sparse-mode mroute detail

show ip pim sparse-mode mroute detail

Overview This command displays detailed entries of the IP multicast routing table, or detailed entries of the IP multicast routing table based on the specified address or addresses.

For information on filtering and saving command output, see the "Getting Started with AlliedWare Plus" Feature Overview and Configuration Guide.

Syntax

```
show ip pim sparse-mode mroute [<group-address>] detail
show ip pim sparse-mode mroute [<source-address>] detail
show ip pim sparse-mode mroute [<group-address>
<source-address>] detail
show ip pim sparse-mode mroute [<source-address>
<group-address>] detail
```

Parameter	Description
<group-address>	Group IP address, entered in the form A.B.C.D. Output is all multicast entries belonging to that group.
<source-address>	Source IP address, entered in the form A.B.C.D. Output is all multicast entries belonging to that source.
detail	Show detailed information.

Usage Based on the group and source address, the output is the selected route if present in the multicast route tree.

Mode User Exec and Privileged Exec

Examples

```
awplus# show ip pim sparse-mode mroute detail
awplus# show ip pim sparse-mode mroute 40.40.40.11 detail
awplus# show ip pim sparse-mode mroute 224.1.1.1 detail
awplus# show ip pim sparse-mode mroute 224.1.1.1 40.40.40.11
detail
```

Figure 36-9: Example output from the **show ip pim sparse-mode mroute detail** command

```
IP Multicast Routing Table

(*,*,RP) Entries: 0
(*,G) Entries: 4
(S,G) Entries: 0
(S,G,rpt) Entries: 0
FCR Entries: 0

(*, 224.0.1.24) Uptime: 00:06:42
  RP: 0.0.0.0, RPF nbr: None, RPF idx: None
  Upstream:
   State: JOINED, SPT Switch: Disabled, JT: off
   Macro state: Join Desired,
  Downstream:
   vlan2:
     State: NO INFO, ET: off, PPT: off
     Assert State: NO INFO, AT: off
      Winner: 0.0.0.0, Metric: 42949672951, Pref: 42949672951,
RPT bit: on
     Macro state: Could Assert, Assert Track
  Local Olist:
   vlan2
```

show ip pim sparse-mode neighbor

Overview Use this command to show the PIM-SM neighbor information.

For information on filtering and saving command output, see the "Getting Started with AlliedWare Plus" Feature Overview and Configuration Guide.

Syntax

```
show ip pim sparse-mode neighbor [<interface>] [<ip-address>]
[detail]
```

Parameter	Description
<interface>	Interface name (e.g. vlan2). Show neighbors on an interface.
<ip-address>	Show neighbors with a particular address on an interface. The IP address entered in the form A.B.C.D.
detail	Show detailed information.

Mode Privileged Exec

Examples

```
awplus# show ip pim sparse-mode neighbor
awplus# show ip pim sparse-mode neighbor vlan5 detail
```

Figure 36-10: Example output from the **show ip pim sparse-mode neighbor** command

```
Neighbor         Interface   Uptime/Expires    Ver   DR
Address                                              Priority/
Mode
10.10.0.9        vlan2       00:55:33/00:01:44 v2    1 /
10.10.0.136      vlan2       00:55:20/00:01:25 v2    1 /
10.10.0.172      vlan2       00:55:33/00:01:32 v2    1 / DR
192.168.0.100    vlan3       00:55:30/00:01:20 v2    N / DR
```

Figure 36-11: Example output from the **show ip pim sparse-mode neighbor interface detail** command

```
Nbr 10.10.3.180 (vlan5), DR
 Expires in 55 seconds, uptime 00:00:15
 Holdtime: 70 secs, T-bit: off, Lan delay: 1, Override interval:
3
 DR priority: 100, Gen ID: 625159467,
 Secondary addresses:
  192.168.30.1
```

show ip pim sparse-mode nexthop

Overview Use this command to see the next hop information as used by PIM-SM.

For information on filtering and saving command output, see the "Getting Started with AlliedWare Plus" Feature Overview and Configuration Guide

Syntax

```
show ip pim sparse-mode nexthop
```

Mode User Exec and Privileged Exec

Example

```
awplus# show ip pim sparse-mode nexthop
```

Figure 36-12: Example output from the **show ip pim sparse-mode nexthop** command

```
Flags: N = New, R = RP, S = Source, U = Unreachable
Destination Type Nexthop Nexthop Nexthop      Nexthop    Metric Pref  Refcnt
                 Num     Addr                 Ifindex    Name
_____________________________________________________________________________
10.10.0.9   .RS.  1      0.0.0.0  4           0           0       1
```

Table 2: Parameters in output of the **show ip pim sparse-mode nexthop** command

Parameter	Description
Destination	The destination address for which PIM-SM requires next hop information.
Type	The type of destination, as indicated by the Flags description. N = New, R= RP, S = Source, U = Unreachable.
Nexthop Num	The number of next hops to the destination. PIM-SM always uses only 1 next hop.
Nexthop Addr	The address of the primary next hop gateway.
Nexthop IfIndex	The interface on which the next hop gateway can be reached.
Nexthop Name	The name of next hop interface.
Metric	The metric of the route towards the destination.
Preference	The preference of the route towards destination.
Refcnt	Only used for debugging.

show ip pim sparse-mode packet statistics

Overview Use this command to display the current packet receive counts for PIM sparse-mode.

Syntax

```
show ip pim sparse-mode packet statistics
```

Mode Privileged Exec

Example The following command displays the current packet receive counts for PIM sparse-mode:

```
awplus# configure terminal
awplus(config)# show ip pim sparse-mode statistics
```

Output Figure 36-13: Example output from **show ip pim sparse-mode statistics**

```
awplus(config)#show ip pim sparse-mode statistics
PIM-SM Receive Packet Statistics :
All PIM-SM     :   Total : 25   Valid : 25
Hello          :   Total : 14   Valid : 14
Register       :   Total : 5   Valid : 5
Register Stop  :   Total : 0   Valid : 0
Join/Prune     :   Total : 0   Valid : 0
Bootstrap      :   Total : 6   Valid : 6
Assert         :   Total : 0   Valid : 0
Candidate-RP   :   Total : 0   Valid : 0
```

Related Commands clear ip pim sparse-mode packet statistics

show ip pim sparse-mode rp-hash

Overview Use this command to display the Rendezvous Point (RP) to be chosen based on the group selected.

For information on filtering and saving command output, see the "Getting Started with AlliedWare Plus" Feature Overview and Configuration Guide.

Syntax

```
show ip pim sparse-mode rp-hash <group-addr>
```

Parameter	Description
<group-addr>	The group address for which to find the RP, entered in the form A.B.C.D.

Mode User Exec and Privileged Exec

Example

```
awplus# show ip pim sparse-mode rp-hash 224.0.1.3
```

Figure 36-14: Output from the **show ip pim sparse-mode rp-hash** command

```
RP: 10.10.11.35
Info source: 10.10.11.35, via bootstrap
```

Related Commands show ip pim sparse-mode rp mapping

show ip pim sparse-mode rp mapping

Overview Use this command to show group-to-RP (Rendezvous Point) mappings, and the RP set.

For information on filtering and saving command output, see the "Getting Started with AlliedWare Plus" Feature Overview and Configuration Guide.

Syntax

```
show ip pim sparse-mode rp mapping
```

Mode Privileged Exec

Example

```
awplus# show ip pim sparse-mode rp mapping
```

Figure 36-15: Output from the **show ip pim sparse-mode rp mapping** command

```
PIM Group-to-RP Mappings
Group(s): 224.0.0.0/4
  RP: 10.10.0.9
    Info source: 10.10.0.9, via bootstrap, priority 192
         Uptime: 16:52:39, expires: 00:02:50
```

Related Commands show ip pim sparse-mode rp-hash

undebug all pim sparse-mode

Overview Use this command to disable all PIM-SM debugging.

Syntax
```
undebug all pim sparse-mode
```

Mode Privileged Exec

Example
```
awplus# undebug all pim sparse-mode
```

Related Commands debug pim sparse-mode

37 PIM-SMv6 Commands

Introduction

Overview

This chapter provides an alphabetical reference of PIM-SMv6 commands. For IPv6 Multicast commands, see Multicast Commands. For an overview of PIM-SMv6, see the PIM-SMv6 Feature Overview and Configuration Guide.

IPv6 must be enabled on an interface with theipv6 enable command, IPv6 forwarding must be enabled globally for routing IPv6 with the ipv6 forwarding command, and IPv6 multicasting must be enabled globally with the ipv6 multicast-routing command before using PIM-SMv6 commands.

Static IPv6 multicast routes take priority over dynamic IPv6 multicast routes. Use the clear ipv6 mroute command to clear static IPv6 multicast routes and ensure dynamic IPv6 multicast routes can take over from previous IPv6 static multicast routes.

NOTE: *The IPv6 Multicast addresses shown can be derived from IPv6 unicast prefixes as per RFC 3306.The IPv6 unicast prefix reserved for documentation is 2001:0db8::/32 as per RFC 3849. Using the base /32 prefix the IPv6 multicast prefix for 2001:0db8::/32 is ff3x:20:2001:0db8::/64. Where an RP address is 2001:0db8::1 the embedded RP multicast prefix is ff7x:120:2001:0db8::/96. For ASM (Any-Source Multicast) the IPV6 multicast addresses allocated for documentation purposes are ff0x::0db8:0:0/96 as per RFC 6676. This is a /96 prefix so that it can be used with group IDs as per RFC 3307. These addresses should not be used for practical networks (other than for testing purposes), nor should they appear in any public network.*

The IPv6 addresses shown use the address space 2001:0db8::/32, defined in RFC 3849 for documentation purposes. These addresses should not be used for practical networks (other than for testing purposes) nor should they appear on any public network.

Command List

- "clear ipv6 mroute pim" on page 1706
- "clear ipv6 mroute pim sparse-mode" on page 1707
- "clear ipv6 pim sparse-mode bsr rp-set *" on page 1708
- "debug ipv6 pim sparse-mode" on page 1709

- "debug ipv6 pim sparse-mode packet" on page 1711
- "debug ipv6 pim sparse-mode timer" on page 1712
- "ipv6 pim anycast-rp" on page 1714
- "ipv6 pim bsr-border" on page 1716
- "ipv6 pim bsr-candidate" on page 1718
- "ipv6 pim cisco-register-checksum" on page 1720
- "ipv6 pim crp-cisco-prefix" on page 1721
- "ipv6 pim dr-priority" on page 1722
- "ipv6 pim exclude-genid" on page 1724
- "ipv6 pim ext-srcs-directly-connected" on page 1725
- "ipv6 pim hello-holdtime" on page 1726
- "ipv6 pim hello-interval" on page 1727
- "ipv6 pim ignore-rp-set-priority" on page 1728
- "ipv6 pim jp-timer" on page 1729
- "ipv6 pim neighbor-filter" on page 1730
- "ipv6 pim register-rate-limit" on page 1731
- "ipv6 pim register-rp-reachability" on page 1732
- "ipv6 pim register-source" on page 1733
- "ipv6 pim register-suppression" on page 1734
- "ipv6 pim rp-address" on page 1735
- "ipv6 pim rp-candidate" on page 1737
- "ipv6 pim rp embedded" on page 1738
- "ipv6 pim rp-register-kat" on page 1739
- "ipv6 pim sparse-mode" on page 1740
- "ipv6 pim sparse-mode passive" on page 1741
- "ipv6 pim spt-threshold" on page 1742
- "ipv6 pim ssm" on page 1743
- "ipv6 pim unicast-bsm" on page 1744
- "show debugging ipv6 pim sparse-mode" on page 1745
- "show ipv6 pim sparse-mode bsr-router" on page 1746
- "show ipv6 pim sparse-mode interface" on page 1747
- "show ipv6 pim sparse-mode interface detail" on page 1749
- "show ipv6 pim sparse-mode local-members" on page 1750
- "show ipv6 pim sparse-mode mroute" on page 1752
- "show ipv6 pim sparse-mode mroute detail" on page 1754

- "show ipv6 pim sparse-mode neighbor" on page 1756
- "show ipv6 pim sparse-mode nexthop" on page 1757
- "show ipv6 pim sparse-mode rp-hash" on page 1758
- "show ipv6 pim sparse-mode rp mapping" on page 1759
- "show ipv6 pim sparse-mode rp nexthop" on page 1760
- "undebug all ipv6 pim sparse-mode" on page 1762
- "undebug ipv6 pim sparse-mode" on page 1763

clear ipv6 mroute pim

Overview Use this command to clear all Multicast Forwarding Cache (MFC) entries in PIM-SMv6.

NOTE: *Static IPv6 multicast routes take priority over dynamic IPv6 multicast routes. Use the clear ipv6 mroute command to clear static IPv6 multicast routes and ensure dynamic IPv6 multicast routes can take over from previous static IPv6 multicast routes.*

Syntax

```
clear ipv6 mroute [*] pim sparse-mode
```

Parameter	Description
*	Clears all PIM-SMv6 multicast routes. Using this command without this optional operator only deletes the multicast router table entries.

Mode Privileged Exec

Example

```
awplus# clear ipv6 mroute pim sparse-mode
awplus# clear ipv6 mroute * pim sparse-mode
```

clear ipv6 mroute pim sparse-mode

Overview Use this command to clear all multicast route table entries learned through PIM-SMv6 for a specified multicast group address, and optionally a specified multicast source address.

NOTE: *Static IPv6 multicast routes take priority over dynamic IPv6 multicast routes. Use the clear ipv6 mroute command to clear static IPv6 multicast routes and ensure dynamic IPv6 multicast routes can take over from previous static IPv6 multicast routes.*

Syntax

```
clear ipv6 mroute <Group-IPv6-add> pim sparse-mode
clear ipv6 mroute <Group-IPv6-add> <Source-IPv6-add> pim
sparse-mode
```

Parameter	Description
<Group-IPv6-add>	Specify a multicast group IPv6 address, entered in the form X:X::X:X.
<Source-IPv6-add>	Specify a source group IPv6 address, entered in the form X:X::X:X.

Mode Privileged Exec

Example

```
awplus# clear ipv6 mroute 2001:db8:: pim sparse-mode
awplus# clear ipv6 mroute 2001:db8:: 2002:db8:: pim sparse-mode
```

clear ipv6 pim sparse-mode bsr rp-set *

Overview Use this command to clear all Rendezvous Point (RP) sets learned through the PIM-SMv6 Bootstrap Router (BSR).

NOTE: *Static IPv6 multicast routes take priority over dynamic IPv6 multicast routes. Use the clear ipv6 mroute command to clear static IPv6 multicast routes and ensure dynamic IPv6 multicast routes can take over from previous static IPv6 multicast routes.*

Syntax

```
clear ipv6 pim sparse-mode bsr rp-set *
```

Parameter	Description
*	Clears all RP sets.

Mode Privileged Exec

Usage For multicast clients, note that one router will be automatically or statically designated as the RP, and all routers must explicitly join through the RP. A Designated Router (DR) sends periodic Join/Prune messages toward a group-specific RP for each group that it has active members.

For multicast sources, note that the Designated Router (DR) unicasts Register messages to the RP encapsulating the data packets from the multicast source. The RP forwards decapsulated data packets toward group members.

Example

```
awplus# clear ipv6 pim sparse-mode bsr rp-set *
```

debug ipv6 pim sparse-mode

Overview Use this command to activate PIM-SMv6 debugging.

Use the no variant of this command to deactivate PIMv6 debugging. Note that the undebug ipv6 pim sparse-mode command is an alias of the no variant of this command.

Syntax

```
debug ipv6 pim sparse-mode [all] [events] [mfc] [mib] [nexthop]
[nsm] [state] [timer]
```

```
no debug ipv6 pim sparse-mode [all] [events] [mfc] [mib]
[nexthop] [nsm] [state] [timer]
```

Parameter	Description
`all`	Activates/deactivates all PIM-SMv6 debugging.
`events`	Activates debug printing of PIM-SMv6 events.
`mfc`	Activates debug printing of MFC (Multicast Forwarding Cache).
`mib`	Activates debug printing of PIM-SMv6 MIBs.
`nexthop`	Activates debug printing of PIM-SMv6 next hop communications.
`nsm`	Activates debugging of PIM-SMv6 NSM (Network Services Module) communications.
`state`	Activates debug printing of state transition on all PIM-SMv6 FSMs.
`timer`	Activates debug printing of PIM-SMv6 timers.

Mode Privileged Exec and Global Configuration

Example

```
awplus# configure terminal
awplus(config)# terminal monitor
awplus(config)# debug ipv6 pim sparse-mode all
awplus# configure terminal
awplus(config)# terminal monitor
awplus(config)# debug ipv6 pim sparse-mode events
awplus# configure terminal
awplus(config)# terminal monitor
awplus(config)# debug ipv6 pim sparse-mode nexthop
```

Validation output

Figure 37-1: Example output from the **show debugging ipv6 pim sparse-mode** command after issuing **multiple debug ipv6 pim sparse-mode** commands

```
awplus#debug ipv6 pim sparse-mode state
awplus#debug ipv6 pim sparse-mode events
awplus#debug ipv6 pim sparse-mode packet
awplus#show debugging ipv6 pim sparse-mode
PIM-SMv6 debugging status:
  PIM event debugging is on
  PIM MFC debugging is off
  PIM state debugging is on
  PIM packet debugging is on
  PIM Hello HT timer debugging is off
  PIM Hello NLT timer debugging is off
  PIM Hello THT timer debugging is off
  PIM Join/Prune JT timer debugging is off
  PIM Join/Prune ET timer debugging is off
  PIM Join/Prune PPT timer debugging is off
  PIM Join/Prune KAT timer debugging is off
  PIM Join/Prune OT timer debugging is off
  PIM Assert AT timer debugging is off
  PIM Register RST timer debugging is off
  PIM Bootstrap BST timer debugging is off
  PIM Bootstrap CRP timer debugging is off
  PIM mib debugging is off
  PIM nsm debugging is off
  PIM nexthop debugging is off
```

Related commands

show debugging ipv6 pim sparse-mode

undebug all ipv6 pim sparse-mode

undebug ipv6 pim sparse-mode

debug ipv6 pim sparse-mode packet

Overview Use this command to activate PIM-SMv6 packet debugging.

Use the no variant of this command to deactivate PIMv6 packet debugging.

Syntax

```
debug ipv6 pim sparse-mode packet {in|out}
no debug ipv6 pim sparse-mode packet {in|out}
```

Parameter	Description
`packet`	Activates debug printing of incoming and/or outgoing IPv6 packets.
`in`	Specify incoming packet debugging.
`out`	Specify outgoing packet debugging.

Mode Privileged Exec and Global Configuration

Example

```
awplus# configure terminal
awplus(config)# terminal monitor
awplus(config)# debug ipv6 pim sparse-mode packet in
awplus# configure terminal
awplus(config)# terminal monitor
awplus(config)# debug ipv6 pim sparse-mode packet out
awplus# configure terminal
awplus(config)# terminal monitor
awplus(config)# no debug ipv6 pim sparse-mode packet in
awplus# configure terminal
awplus(config)# terminal monitor
awplus(config)# no debug ipv6 pim sparse-mode packet out
```

Related commands

show debugging ipv6 pim sparse-mode

undebug all ipv6 pim sparse-mode

debug ipv6 pim sparse-mode timer

Overview Use this command to enable debugging for the specified PIM-SMv6 timers.

Use the **no** variants of this command to disable debugging for the specified PIM-SMv6 timers.

Syntax

```
debug ipv6 pim sparse-mode timer assert [at]
no debug ipv6 pim sparse-mode timer assert [at]
debug pim ipv6 sparse-mode timer bsr [bst|crp]
no debug pim ipv6 sparse-mode timer bsr [bst|crp]
debug pim ipv6 sparse-mode timer hello [ht|nlt|tht]
no debug pim ipv6 sparse-mode timer hello [ht|nlt|tht]
debug pim ipv6 sparse-mode timer joinprune [jt|et|ppt|kat|ot]
no debug pim ipv6 sparse-mode timer joinprune
[jt|et|ppt|kat|ot]
debug pim ipv6 sparse-mode timer register [rst]
no debug pim ipv6 sparse-mode timer register [rst]
```

Parameter	Description
`assert`	Enable or disable debugging for the Assert timers.
`at`	Enable or disable debugging for the Assert Timer.
`bsr`	Enable or disable debugging for the specified Bootstrap Router timer, or all Bootstrap Router timers.
`bst`	Enable or disable debugging for the Bootstrap Router: Bootstrap Timer.
`crp`	Enable or disable debugging for the Bootstrap Router: Candidate-RP Timer.
`hello`	Enable or disable debugging for the specified Hello timer, or all Hello timers.
`ht`	Enable or disable debugging for the Hello timer: Hello Timer.
`nlt`	Enable or disable debugging for the Hello timer: Neighbor Liveness Timer.
`tht`	Enable or disable debugging for the Hello timer: Triggered Hello Timer.
`joinprune`	Enable or disable debugging for the specified JoinPrune timer, or all JoinPrune timers.
`jt`	Enable or disable debugging for the JoinPrune timer: upstream Join Timer.
`et`	Enable or disable debugging for the JoinPrune timer: Expiry Timer.
`ppt`	Enable or disable debugging for the JoinPrune timer: PrunePending Timer.

Parameter	Description
`kat`	Enable or disable debugging for the JoinPrune timer: KeepAlive Timer.
`ot`	Enable or disable debugging for the JoinPrune timer: Upstream Override Timer.
`register`	Enable or disable debugging for the Register timers.
`rst`	Enable or disable debugging for the Register timer: Register Stop Timer.

Default By default, all debugging is disabled.

Mode Privileged Exec and Global Configuration

Examples To enable debugging for the PIM-SMv6 Bootstrap Router bootstrap timer, use the commands:

```
awplus(config)# debug ipv6 pim sparse-mode timer bsr bst
```

To enable debugging for the PIM-SMv6 Hello: neighbor liveness timer, use the command:

```
awplus(config)# debug ipv6 pim sparse-mode timer hello ht
```

To enable debugging for the PIM-SMv6 Joinprune expiry timer, use the command:

```
awplus# debug ipv6 pim sparse-mode timer joinprune et
```

To disable debugging for the PIM-SMv6 Register timer, use the command:

```
awplus# no debug ipv6 pim sparse-mode timer register
```

Related commands show debugging ipv6 pim sparse-mode

ipv6 pim anycast-rp

Overview Use this command to configure Anycast RP (Rendezvous Point) in an RP set.

Use the **no** variant of this command to remove the configuration.

Syntax

```
ipv6 pim anycast-rp <anycast-rp-address> <member-rp-address>
no ipv6 pim anycast-rp <anycast-rp-address>
[<member-rp-address>]
```

Parameter	Description
<anycast-rp-address>	<X:X::X:X> Specify an Anycast IPv6 address to configure an Anycast RP (Rendezvous Point) in a RP set.
<member-rp-address>	<A:B::C:D> Specify an Anycast RP (Rendezvous Point)IPv6 address to configure an Anycast RP in a RP set.

Mode Global Configuration

Usage Anycast is a network addressing and routing scheme where data is routed to the nearest or best destination as viewed by the routing topology. Compared to unicast with a one-to-one association between network address and network endpoint, and multicast with a one-to-many association between network address and network endpoint; anycast has a one-to-many association between network address and network endpoint. For anycast, each destination address identifies a set of receiver endpoints, from which only one receiver endpoint is chosen.

Anycast is often implemented using BGP to simultaneously advertise the same destination IPv6 address range from many sources, resulting in packets addressed to destination addresses in this range being routed to the nearest source announcing the given destination IPv6 address.

Use this command to specify the Anycast RP configuration in the Anycast RP set. Use the **no** variant of this command to remove the Anycast RP configuration. Note that the member RP address is optional when using the **no** parameter to remove the Anycast RP configuration. removing the anycast RP address also removes the member RP address.

Examples The following example shows how to configure the Anycast RP address with **ipv6 pim anycast-rp**:

```
awplus# configure terminal
awplus(config)# ipv6 forwarding
awplus(config)# ipv6 multicast-routing
awplus(config)# ipv6 pim anycast-rp 2:2::2:2 20:20::20:20
```

The following example shows how to remove the Anycast RP in the RP set specifying only the anycast RP address with **no ipv6 pim anycast-rp**, but not specifying the member RP address:

```
awplus# configure terminal
awplus(config)# no ipv6 pim anycast-rp 2:2::2:2 20:20::20:20
```

ipv6 pim bsr-border

Overview Use the **ipv6 pim bsr-border** command to prevent Bootstrap Router (BSR) messages from being sent or received through a VLAN interface. The BSR border is the border of the PIM-SMv6 domain.

Use the **no** variant of this command to disable the configuration set with **ipv6 pim bsr-border**.

Syntax

```
ipv6 pim bsr-border
no ipv6 pim bsr-border
```

Mode Interface Configuration for a VLAN interface or a PPP interface.

Usage When this command is configured on a VLAN interface, no PIM-SMv6 BSR messages will be sent or received through the interface. Configure an interface bordering another PIM- SMv6 domain with this command to avoid BSR messages from being exchanged between the two PIM-SMv6 domains.

BSR messages should not be exchanged between different domains, because devices in one domain may elect Rendezvous Points (RPs) in the other domain, resulting in loss of isolation between the two PIM domains that would stop the PIM-SMv6 protocol from working as intended.

Examples The following example configures the VLAN interface vlan2 to be the PIM-SMv6 domain border:

```
awplus# configure terminal
awplus(config)# ipv6 forwarding
awplus(config)# ipv6 multicast-routing
awplus(config)# interface vlan2
awplus(config-if)# ipv6 enable
awplus(config-if)# ipv6 pim bsr-border
```

The following example removes the VLAN interface vlan2 from the PIM-SMv6 domain border:

```
awplus# configure terminal
awplus(config)# interface vlan2
awplus(config-if)# no ipv6 pim bsr-border
```

The following example configures the PPP interface ppp0 to be the PIM -SMv6 domain border:

```
awplus# configure terminal
awplus(config)# ipv6 forwarding
awplus(config)# ipv6 multicast-routing
awplus(config)# interface ppp0
awplus(config-if)# ipv6 enable
awplus(config-if)# ipv6 pim bsr-border
```

The following example removes the PPP interface ppp0 from the PIM-SMv6 domain border:

```
awplus# configure terminal
awplus(config)# interface ppp0
awplus(config-if)# no ipv6 pim bsr-border
```

ipv6 pim bsr-candidate

Overview Use this command to give the device the candidate BSR (Bootstrap Router) status using the specified IPv6 address mask of the interface.

Use the **no** variant of this command to withdraw the address of the interface from being offered as a BSR candidate.

Syntax

```
ipv6 pim bsr-candidate <interface> [<hash>] [<priority>]
no ipv6 pim bsr-candidate [<interface>]
```

Parameter	Description
<interface>	Specify the interface. For instance, VLAN interface `vlan2`.
<hash>	<0-128> configure the hash mask length used for RP selection. The default hash value if you do not configure this parameter is 126.
<priority>	<0-255> configure priority for a BSR candidate. Note that you must also specify the *<hash>* (mask length) when specifying the *<priority>*. The default priority if you do not configure this parameter is 64.

Mode Global Configuration

Default The default hash parameter value is 126 and the default priority parameter value is 64.

Examples To set the BSR candidate to the VLAN interface vlan2, with the optional mask length and BSR priority parameters, enter the commands shown below:

```
awplus# configure terminal
awplus(config)# ipv6 forwarding
awplus(config)# ipv6 multicast-routing
awplus(config)# ipv6 pim bsr-candidate vlan2 20 30
```

To withdraw the address of vlan2 from being offered as a BSR candidate, enter:

```
awplus# configure terminal
awplus(config)# no ipv6 pim bsr-candidate vlan2
```

To set the BSR candidate to the PPP interface ppp0, with the optional mask length and BSR priority parameters, enter the commands shown below:

```
awplus# configure terminal
awplus(config)# ipv6 forwarding
awplus(config)# ipv6 multicast-routing
awplus(config)# ipv6 pim bsr-candidate ppp0 20 30
```

To withdraw the address of ppp0 from being offered as a BSR candidate, enter:

```
awplus# configure terminal
awplus(config)# no ipv6 pim bsr-candidate ppp0
```

ipv6 pim cisco-register-checksum

Overview Use this command to configure the option to calculate the Register Checksum over the whole packet. This command is used to inter-operate with older Cisco IOS versions.

Use the **no** variant of this command to disable this option.

Syntax

```
ipv6 pim cisco-register-checksum
no ipv6 pim cisco-register-checksum
```

Default This command is disabled by default. By default, Register Checksum is calculated only over the header.

Mode Global Configuration

Example

```
awplus# configure terminal
awplus(config)# ipv6 forwarding
awplus(config)# ipv6 multicast-routing
awplus(config)# ipv6 pim cisco-register-checksum
awplus# configure terminal
awplus(config)# no ipv6 pim cisco-register-checksum
```

ipv6 pim crp-cisco-prefix

Overview Use this command to interoperate with Cisco devices that conform to an earlier draft standard. Some Cisco devices might not accept candidate RPs with a group prefix number of zero. Note that the latest BSR specification prohibits sending RP advertisements with prefix 0.

Use the **no** variant of this command to revert to the default settings.

Syntax
```
ipv6 pim crp-cisco-prefix
no ipv6 pim crp-cisco-prefix
```

Mode Global Configuration

Usage Cisco's BSR code does not conform to the latest BSR draft, it does not accept candidate RPs with a group prefix number of zero. To make the candidate RP work with a Cisco BSR, use the **ipv6 pim crp-cisco-prefix** command when interoperating with older versions of Cisco IOS.

Example
```
awplus# configure terminal
awplus(config)# ipv6 forwarding
awplus(config)# ipv6 multicast-routing
awplus(config)# ipv6 pim crp-cisco-prefix
awplus# configure terminal
awplus(config)# no ipv6 pim crp-cisco-prefix
```

Related commands ipv6 pim rp-candidate

ipv6 pim dr-priority

Overview Use this command to set the Designated Router priority value.

Use the **no** variant of this command to disable this function.

Syntax

```
ipv6 pim dr-priority  <priority>
no ipv6 pim dr-priority [<priority>]
```

Parameter	Description
<priority>	<0-4294967294> Specify the Designated Router priority value. Note that a higher value has a higher preference or higher priority.

Default The default value is 1. The negated form of this command restores the value to the default.

Mode Interface Configuration for a VLAN interface or a PPP interface.

Examples To set the Designated Router priority value to 11234 for the VLAN interface vlan2, apply the commands as shown below:

```
awplus# configure terminal
awplus(config)# ipv6 forwarding
awplus(config)# ipv6 multicast-routing
awplus(config)# interface vlan2
awplus(config-if)# ipv6 enable
awplus(config-if)# ipv6 pim dr-priority 11234
```

To disable the Designated Router priority value for the VLAN interface vlan2, apply the commands as shown below:

```
awplus# configure terminal
awplus(config)# interface vlan2
awplus(config-if)# no ipv6 pim dr-priority
```

To set the Designated Router priority value to 11234 for the PPP interface ppp0, apply the commands as shown below:

```
awplus# configure terminal
awplus(config)# ipv6 forwarding
awplus(config)# ipv6 multicast-routing
awplus(config)# interface ppp0
awplus(config-if)# ipv6 enable
awplus(config-if)# ipv6 pim dr-priority 11234
```

To disable the Designated Router priority value for the PPP interface ppp0, apply the commands as shown below:

```
awplus# configure terminal
awplus(config)# interface ppp0
awplus(config-if)# no ipv6 pim dr-priority
```

Related commands ipv6 pim ignore-rp-set-priority

ipv6 pim exclude-genid

Overview Use this command to exclude the GenID option from Hello packets sent out by the PIM-SMv6 module on a particular interface. This command is used to inter-operate with older Cisco IOS versions.

Use the **no** variant of this command to revert to default settings.

Syntax

```
ipv6 pim exclude-genid
no ipv6 pim exclude-genid
```

Default By default, this command is disabled; the GenID option is included.

Mode Interface Configuration for a VLAN interface or a PPP interface.

Examples

```
awplus# configure terminal
awplus(config)# ipv6 forwarding
awplus(config)# ipv6 multicast-routing
awplus(config)# interface vlan2
awplus(config-if)# ipv6 enable
awplus(config-if)# ipv6 pim exclude-genid
awplus# configure terminal
awplus(config)# ipv6 forwarding
awplus(config)# ipv6 multicast-routing
awplus(config)# interface ppp0
awplus(config-if)# ipv6 enable
awplus(config-if)# ipv6 pim exclude-genid
awplus# configure terminal
awplus(config)# interface vlan2
awplus(config-if)# no ipv6 pim exclude-genid
```

ipv6 pim ext-srcs-directly-connected

Overview Use this command to configure PIM-SMv6 to treat all source traffic arriving on the interface as though it was sent from a host directly connected to the interface.

Use the **no** variant of this command to configure PIM-SMv6 to treat only directly connected sources as directly connected.

Syntax

```
ipv6 pim ext-srcs-directly-connected
no ipv6 pim ext-srcs-directly-connected
```

Default The **no** variant of this command is the default behavior.

Mode Interface Configuration for a VLAN interface or a PPP interface.

Example To configure PIM-SMv6 to treat all sources as directly connected for VLAN interface vlan2, use the following commands:

```
awplus# configure terminal
awplus(config)# ipv6 forwarding
awplus(config)# ipv6 multicast-routing
awplus(config)# interface vlan2
awplus(config-if)# ipv6 enable
awplus(config-if)# ipv6 pim ext-srcs-directly-connected
```

To configure PIM-SMv6 to treat only directly connected sources as directly connected for VLAN interface vlan2, use the following commands:

```
awplus# configure terminal
awplus(config)# interface vlan2
awplus(config-if)# no ipv6 pim ext-srcs-directly-connected
```

To configure PIM to treat all sources as directly connected for PPP interface ppp0, use the following commands:

```
awplus# configure terminal
awplus(config)# ipv6 forwarding
awplus(config)# ipv6 multicast-routing
awplus(config)# interface ppp0
awplus(config-if)# ipv6 enable
awplus(config-if)# ipv6 pim ext-srcs-directly-connected
```

To configure PIM to treat only directly connected sources as directly connected for PPP interface ppp0, use the following commands:

```
awplus# configure terminal
awplus(config)# interface ppp0
awplus(config-if)# no ipv6 pim ext-srcs-directly-connected
```

ipv6 pim hello-holdtime

Overview This command configures a hello-holdtime value. You cannot configure a hello-holdtime value that is less than the current hello-interval.

Use the **no** variant of this command to return it to its default of 3.5 * the current hello-interval.

Syntax

```
ipv6 pim hello-holdtime <holdtime>
no ipv6 pim hello-holdtime
```

Parameter	Description
<holdtime>	<1-65535> The holdtime value in seconds (no fractional seconds are accepted).

Default The default hello-holdtime value is 3.5 * the current hello-interval. The default hello- holdtime is restored using the negated form of this command.

Mode Interface Configuration for a VLAN interface or a PPP interface.

Usage Each time the hello interval is updated, the hello holdtime is also updated, according to the following rules:

If the hello holdtime is not configured; or if the hello holdtime is configured and less than the current hello-interval value, it is modified to the (3.5 * hello interval). Otherwise, it retains the configured value.

Examples

```
awplus# configure terminal
awplus(config)# ipv6 forwarding
awplus(config)# ipv6 multicast-routing
awplus(config)# interface vlan2
awplus(config-if)# ipv6 enable
awplus(config-if)# ipv6 pim hello-holdtime 123
awplus# configure terminal
awplus(config)# ipv6 forwarding
awplus(config)# ipv6 multicast-routing
awplus(config)# interface ppp0
awplus(config-if)# ipv6 enable
awplus(config-if)# ipv6 pim hello-holdtime 123
awplus# configure terminal
awplus(config)# interface vlan2
awplus(config-if)# no ipv6 pim hello-holdtime
```

ipv6 pim hello-interval

Overview This command configures a hello-interval value for PIM-SMv6.

Use the **no** variant of this command to reset the hello-interval for PIM-SMv6 to the default.

Syntax

```
ipv6 pim hello-interval <interval>
no ipv6 pim hello-interval
```

Parameter	Description
<interval>	<1-65535> The value in seconds (no fractional seconds accepted).

Default The default hello-interval value is 30 seconds. The default is restored using the negated form of this command.

Mode Interface Configuration for a VLAN interface or a PPP interface.

Usage When the hello interval is configured, and the hello holdtime is not configured, or when the configured hello-holdtime value is less than the new hello-interval value; the holdtime value is modified to the (3.5 * hello interval). Otherwise, the hello-holdtime value is the configured value.

Example

```
awplus# configure terminal
awplus(config)# ipv6 forwarding
awplus(config)# ipv6 multicast-routing
awplus(config)# interface vlan2
awplus(config-if)# ipv6 enable
awplus(config-if)# ipv6 pim hello-interval 123
awplus# configure terminal
awplus(config)# ipv6 forwarding
awplus(config)# ipv6 multicast-routing
awplus(config)# interface ppp0
awplus(config-if)# ipv6 enable
awplus(config-if)# ipv6 pim hello-interval 123
awplus# configure terminal
awplus(config)# interface vlan2
awplus(config-if)# no ipv6 pim hello-interval
```

ipv6 pim ignore-rp-set-priority

Overview Use this command to ignore the RP-SET priority value, and use only the hashing mechanism for RP selection.

Use the **no** variant of this command to disable this setting.

Syntax

```
ipv6 pim ignore-rp-set-priority
no ipv6 pim ignore-rp-set-priority
```

Mode Global Configuration

Usage This command is used to inter-operate with older Cisco IOS versions.

Example

```
awplus# configure terminal
awplus(config)# ipv6 forwarding
awplus(config)# ipv6 multicast-routing
awplus(config)# ipv6 pim ignore-rp-set-priority
awplus# configure terminal
awplus(config)# no ipv6 pim ignore-rp-set-priority
```

ipv6 pim jp-timer

Overview Use this command to set the PIM-SMv6 join/prune timer. Note that the value set by the join/prune timer is the value that the device puts into the holdtime field of the join/prune packets it sends to its neighbors.

Use the **no** variant of this command to return the PIM-SMv6 join/prune timer to its default value of 210 seconds.

Syntax

```
ipv6 pim jp-timer <1-65535>
no ipv6 pim jp-timer [<1-65535>]
```

Parameter	Description
<1-65535>	Specifies the Join/Prune timer value. The default value is 210 seconds.

Default The default PIM-SMv6 join/prune timer value is 210 seconds.

Mode Global Configuration

Example

```
awplus# configure terminal
awplus(config)# ipv6 forwarding
awplus(config)# ipv6 multicast-routing
awplus(config)# ipv6 pim jp-timer 300
awplus# configure terminal
awplus(config)# no ipv6 pim jp-timer
```

ipv6 pim neighbor-filter

Overview The AR3050S and AR4050S devices don't support access control list in 5.4.5-0.1 release.

This command enables filtering of neighbors on the VLAN interface. When configuring a neighbor filter, PIM-SMv6 will either not establish adjacency with the neighbor, or terminate adjacency with the existing neighbors if denied by the filtering IPv6 access list.

Use the **no** variant of this command to disable this function.

Syntax

```
ipv6 pim neighbor-filter <IPv6-accesslist>
no ipv6 pim neighbor-filter <IPv6-accesslist>
```

Parameter	Description
<IPv6-accesslist>	Specify a Standard or an Extended software IPv6 access list name for the PIM-SMv6 neighbor filter.

Default By default, there is no neighbor filtering applied to an interface.

Mode Interface Configuration for a VLAN interface or a PPP interface.

Example

```
awplus# configure terminal
awplus(config)# ipv6 forwarding
awplus(config)# ipv6 multicast-routing
awplus(config)# interface ppp0
awplus(config-if)# ipv6 enable
awplus(config-if)# ipv6 pim neighbor-filter filter1
```

ipv6 pim register-rate-limit

Overview Use this command to configure the rate of register packets sent by this DR, in units of packets per second. The configured rate is per (S, G) state, and is not a system wide rate.

Use the **no** variant of this command to remove the limit and reset to the default rate limit.

Syntax

```
ipv6 pim register-rate-limit <1-65535>
no ipv6 pim register-rate-limit
```

Parameter	Description
<1-65535>	Specifies the maximum number of packets that can be sent per second.

Mode Global Configuration

Default The default is 0, as reset with the **no** variant, which also specifies an unlimited rate limit.

Examples

```
awplus# configure terminal
awplus(config)# ipv6 forwarding
awplus(config)# ipv6 multicast-routing
awplus(config)# ipv6 pim register-rate-limit 3444
awplus# configure terminal
awplus(config)# no ipv6 pim register-rate-limit 3444
```

ipv6 pim register-rp-reachability

Overview Use this command to enable the RP reachability check for PIMv6 Register processing at the DR. The default setting is no checking for RP-reachability.

Use the **no** variant of this command to disable this processing.

Syntax
```
ipv6 pim register-rp-reachability
no ipv6 pim register-rp-reachability
```

Default This command is disabled; by default, there is no checking for RP-reachability.

Mode Global Configuration

Examples
```
awplus# configure terminal
awplus(config)# ipv6 forwarding
awplus(config)# ipv6 multicast-routing
awplus(config)# ipv6 pim register-rp-reachability
awplus# configure terminal
awplus(config)# no ipv6 pim register-rp-reachability
```

ipv6 pim register-source

Overview Use this command to configure the source IPv6 address of register packets sent by this DR, overriding the default source IPv6 address, which is the IPv6 address of the RPF interface toward the source host.

Use the **no** variant of this command to remove the IPv6 source address of Register packets sent by this DR, reverting back to use the default IPv6 source address that is the address of the RPF interface toward the source host.

Syntax

```
ipv6 pim register-source [<source-IPv6-address>|<interface>]
no ipv6 pim register-source
```

Parameter	Description
<source-IPv6-address>	The IPv6 address, entered in the form X:X::X:X, to be used as the source of the register packets.
<interface>	The name of the VLAN interface to be used as the source of the register packets.

Usage The configured address must be a reachable address to be used by the RP to send corresponding Register-Stop messages in response. It is normally the local loopback IPv6 interface address, but can also be a physical IPv6 address. This IPv6 address must be advertised by unicast routing protocols on the DR. The configured interface does not have to be PIM-SMv6 enabled.

Mode Global Configuration

Examples

```
awplus# configure terminal
awplus(config)# ipv6 forwarding
awplus(config)# ipv6 multicast-routing
awplus(config)# ipv6 pim register-source 3ffe::24:2
awplus# configure terminal
awplus(config)# ipv6 forwarding
awplus(config)# ipv6 multicast-routing
awplus(config)# ipv6 pim register-source vlan2
awplus# configure terminal
awplus(config)# ipv6 forwarding
awplus(config)# ipv6 multicast-routing
awplus(config)# no ipv6 pim register-source
```

ipv6 pim register-suppression

Overview Use this command to configure the register-suppression time, in seconds, overriding the default of 60 seconds.

Use the **no** variant of this command to reset the value to its default of 60 seconds.

Syntax

```
ipv6 pim register-suppression <1-65535>
no ipv6 pim register-suppression
```

Parameter	Description
<1-65535>	Register suppression on time in seconds.

Mode Global Configuration

Default The default PIM-SMv6 register suppression time is 60 seconds, and is restored with the no variant of this command.

Usage Configuring this value modifies register-suppression time at the DR. Configuring this value at the RP modifies the RP-keepalive-period value if the ipv6 pim rp-register-kat command is not used.

Examples

```
awplus# configure terminal
awplus(config)# ipv6 forwarding
awplus(config)# ipv6 multicast-routing
awplus(config)# ipv6 pim register-suppression 192
awplus# configure terminal
awplus(config)# no ipv6 pim register-suppression
```

ipv6 pim rp-address

Overview The AR3050S and AR4050 devices don't support access control list in 5.4.5-0.1 release.

Use this command to statically configure RP (Rendezvous Point) address for IPv6 multicast groups.

Use the **no** variant of this command to remove a statically configured RP (Rendezvous Point) address for IPv6 multicast groups.

Syntax

```
ipv6 pimv6 rp-address <IPv6-address>
no ipv6 pim rp-address <IPv6-address>
```

Parameter	Description
<IPv6-address>	Specify the IPv6 address of the Rendezvous Point, entered in the form `X:X::X:X`.

Mode Global Configuration

Usage The AlliedWare Plus™ PIM-SMv6 implementation supports multiple static RPs. It also supports usage of static-RP and BSR mechanism simultaneously. The **ipv6 pim rp-address** command is used to statically configure the RP address for IPv6 multicast groups.

You need to understand the following information before using this command.

If the RP-address that is configured by the BSR, and the RP-address that is configured statically, are both available for a group range, then the RP-address configured through BSR is chosen over the statically configured RP-address.

If multiple static-RPs are available for a group range, then one with the highest IPv6 address is chosen.

After configuration, the RP-address is inserted into a static-RP group tree based on the configured group ranges. For each group range, multiple static-RPs are maintained in a list. This list is sorted in a descending order of IPv6 addresses. When selecting static-RPs for a group range, the first element (which is the static-RP with highest IPv6 address) is chosen.

RP-address deletion is handled by removing the static-RP from all the existing group ranges and recalculating the RPs for existing TIB states if required.

Group mode and RP address mappings learned through BSR take precedence over mappings statistically defined by the ipv6 pim rp-address command. Commands with the override keyword take precedence over dynamically learned mappings.

Examples

```
awplus# configure terminal
awplus(config)# no ipv6 pim rp-address 3ffe:30:30:5::153 G2
```

Related commands

ipv6 pim rp-candidate

ipv6 pim rp-register-kat

ipv6 pim rp-candidate

Overview Use this command to make the device an RP (Rendezvous Point) candidate, using the IPv6 address of the specified VLAN interface.

Use the **no** variant of this command to stop the device from being an RP candidate.

Syntax

```
ipv6 pim rp-candidate <interface> [priority <priority>|interval
<interval>|grouplist <accesslist>]
no ipv6 pim rp-candidate [<interface>]
```

Parameter	Description
<interface>	Specify a VLAN interface name.
<priority>	Specify the priority for the RP candidate in the range 0 to 255.
<interval>	Specify a candidate RP advertisement interval in the range 1 to 16383 (seconds).
<accesslist>	Specify a Standard or an Extended software IPv6 access list name.

Default The priority value for a candidate RP is 192 by default until specified using the **priority** parameter.

Mode Global Configuration

Usage Note that issuing the command **ipv6 pim rp-candidate** *<interface>* without optional **priority**, **interval**, or **grouplist** parameters will configure the candidate RP with a priority value of 192.

Examples To specify a priority of 3, use the following commands:

```
awplus# configure terminal
awplus(config)# ipv6 forwarding
awplus(config)# ipv6 multicast-routing
awplus(config)# ipv6 pim rp-candidate vlan2 priority 3
```

To stop the device from being an RP candidate on vlan2 , use the following commands:

```
awplus# configure terminal
awplus(config)# no ipv6 pim rp-candidate vlan2
```

Related commands ipv6 pim rp-address

ipv6 pim rp-register-kat

ipv6 pim rp embedded

Overview Use this command to configure and enable embedded RP (Rendezvous Point) in PIM-SMv6.

This command only applies to the embedded RP group range **ff7x::/12** and **fffx::/12**.

Use the **no** variant of this command to disable embedded RP support. Since embedded RP support is enabled by default, use the **no** variant of this command to disable the default.

Syntax

```
ipv6 pim rp embedded
no ipv6 pim rp embedded
```

Mode Global Configuration

Default Embedded RP is enabled by default in the AlliedWare Plus implementation of PIM-SMv6.

Examples The following example re-enables embedded RP support, the default state in PIM-SMv6:

```
awplus# configure terminal
awplus(config)# ipv6 forwarding
awplus(config)# ipv6 multicast-routing
awplus(config)# ipv6 pim rp embedded
```

The following example disables embedded RP support, which is enabled by default in PIM-SMv6:

```
awplus# configure terminal
awplus(config)# no ipv6 pim rp embedded
```

ipv6 pim rp-register-kat

Overview Use this command to configure the Keep Alive Time (KAT) for (S,G) states at the RP (Rendezvous Point) to monitor PIM-SMv6 Register packets.

Use the **no** variant of this command to return the PIM-SMv6 KAT timer to its default value of 210 seconds.

Syntax

```
ipv6 pim rp-register-kat <1-65535>
no ipv6 pim rp-register-kat
```

Parameter	Description
<1-65536>	Specify the KAT timer in seconds. The default value is 210 seconds.

Mode Global Configuration

Default The default PIM-SMv6 KAT timer value is 210 seconds.

Examples

```
awplus# configure terminal
awplus(config)# ipv6 forwarding
awplus(config)# ipv6 multicast-routing
awplus(config)# ipv6 pim rp-register-kat 3454
awplus# configure terminal
awplus(config)# no ipv6 pim rp-register-kat
```

Related commands ipv6 pim rp-address

ipv6 pim rp-candidate

ipv6 pim sparse-mode

Overview Use this command to enable PIM-SMv6 on a VLAN interface or a PPP interface.

Use the **no** variant of this command to disable PIM-SMv6 on a VLAN interface or a PPP interface.

Syntax

```
ipv6 pim sparse-mode
no ipv6 pim sparse-mode
```

Mode Interface Configuration for a VLAN interface or a PPP interface.

Examples

```
awplus# configure terminal
awplus(config)# ipv6 forwarding
awplus(config)# ipv6 multicast-routing
awplus(config)# interface vlan2
awplus(config-if)# ipv6 enable
awplus(config-if)# ipv6 pim sparse-mode
awplus# configure terminal
awplus(config)# interface vlan2
awplus(config-if)# no ipv6 pim sparse-mode
awplus# configure terminal
awplus(config)# ipv6 forwarding
awplus(config)# ipv6 multicast-routing
awplus(config)# interface ppp0
awplus(config-if)# ipv6 enable
awplus(config-if)# ipv6 pim sparse-mode
awplus# configure terminal
awplus(config)# interface ppp0
awplus(config-if)# no ipv6 pim sparse-mode
```

ipv6 pim sparse-mode passive

Overview Use this command to enable and disable PIM-SMv6 passive mode operation for local members on a VLAN interface or a PPP interface.

Use the **no** variant of this command to disable PIM-SMv6 passive mode operation for local members on a VLAN interface or a PPP interface.

Syntax
```
ipv6 pim sparse-mode passive
no ipv6 pim sparse-mode passive
```

Mode Interface Configuration for a VLAN interface or a PPP interface.

Usage Passive mode essentially stops PIM-SMv6 transactions on the interface, allowing only the MLD mechanism to be active.

Examples
```
awplus# configure terminal
awplus(config)# ipv6 forwarding
awplus(config)# ipv6 multicast-routing
awplus(config)# interface vlan2
awplus(config-if)# ipv6 enable
awplus(config-if)# ipv6 pim sparse-mode passive
awplus# configure terminal
awplus(config)# interface vlan2
awplus(config-if)# no ipv6 pim sparse-mode passive
awplus# configure terminal
awplus(config)# ipv6 forwarding
awplus(config)# ipv6 multicast-routing
awplus(config)# interface ppp0
awplus(config-if)# ipv6 enable
awplus(config-if)# ipv6 pim sparse-mode passive
awplus# configure terminal
awplus(config)# interface ppp0
awplus(config-if)# no ipv6 pim sparse-mode passive
```

ipv6 pim spt-threshold

Overview This command turns on the ability for the last-hop PIM-SMv6 router to switch to SPT (shortest-path tree).

The **no** variant of this command turns off the ability for the last-hop PIM-SMv6 router to switch to SPT.

NOTE: *The switching to SPT happens either at the receiving of the first data packet, or not at all; it is not rate-based.*

Syntax

```
ipv6 pim spt-threshold
no ipv6 pim spt-threshold
```

Mode Global Configuration

Examples To enable the last-hop PIM-SMv6 router to switch to SPT, use the following commands:

```
awplus# configure terminal
awplus(config)# ipv6 forwarding
awplus(config)# ipv6 multicast-routing
awplus(config)# ipv6 pim spt-threshold
```

To stop the last-hop PIM-SMv6 router from being able to switch to SPT, use the following commands:

```
awplus# configure terminal
awplus(config)# no ipv6 pim spt-threshold
```

ipv6 pim ssm

Overview Use this command to define the Source Specific Multicast (SSM) range of IPv6 multicast addresses. PIM-SMv6 routers will only install (S,G) entries for multicast groups (addresses) residing in the SSM range.

Use the **no** variant of this command to disable the SSM range.

Syntax

```
ipv6 pim ssm [default]
no ipv6 pim ssm
```

Parameter	Description
`default`	Named Standard Access List. Use FF3x::/32 group range for SSM.

Default By default, the command is disabled.

Mode Global Configuration

Usage Any (*,G) or (S,G,rpt) joins received for multicast groups (addresses) within the range, are not installed in PIM-SMv6 mroute table.

Examples The following commands show how to set PIM-SSM as default:

```
awplus# configure terminal
awplus(config)# ipv6 pim ssm default
```

The following commands show how to disable PIM-SSM:

```
awplus# configure terminal
awplus(config)# no ipv6 pim ssm
```

ipv6 pim unicast-bsm

Overview Use this command to enable support for the sending and receiving of unicast Boot Strap Messages (BSM) on a VLAN interface.

Use the **no** variant of this command to disable the sending and receiving of unicast BSM on a VLAN interface.

Syntax
```
ipv6 pim unicast-bsm
no ipv6 pim unicast-bsm
```

Mode Interface Configuration for a VLAN interface.

Default Unicast BSM is disabled by default on an interface.

Usage This command provides backward compatibility with older versions of the Boot Strap Router (BSR) specification, which directs unicast BSM to refresh the state of new or restarting neighbors. The current BSR specification defines a No Forward BSM to achieve the same result.

Examples
```
awplus# configure terminal
awplus(config)# ipv6 forwarding
awplus(config)# ipv6 multicast-routing
awplus(config)# interface vlan2
awplus(config-if)# ipv6 enable
awplus(config-if)# ipv6 pim unicast-bsm
awplus# configure terminal
awplus(config)# interface vlan2
awplus(config-if)# no ipv6 pim unicast-bsm
```

show debugging ipv6 pim sparse-mode

Overview This command displays the status of the PIM-SMv6 debugging on your device.

For information on filtering and saving command output, see the "Getting Started with AlliedWare Plus" Feature Overview and Configuration Guide.

Syntax

```
show debugging ipv6 pim sparse-mode
```

Mode User Exec and Privileged Exec

Example To display PIM-SMv6 debugging settings, use the command:

```
awplus# show debugging ipv6 pim sparse-mode
```

Figure 37-2: Example output from the **show debugging ipv6 pim sparse-mode** command

```
awplus#show debugging ipv6 pim sparse-mode
Debugging status:
  PIM event debugging is on
  PIM MFC debugging is on
  PIM state debugging is on
  PIM packet debugging is on
  PIM Hello HT timer debugging is on
  PIM Hello NLT timer debugging is on
  PIM Hello THT timer debugging is on
  PIM Join/Prune JT timer debugging is on
  PIM Join/Prune ET timer debugging is on
  PIM Join/Prune PPT timer debugging is on
  PIM Join/Prune KAT timer debugging is on
  PIM Join/Prune OT timer debugging is on
  PIM Assert AT timer debugging is on
  PIM Register RST timer debugging is on
  PIM Bootstrap BST timer debugging is on
  PIM Bootstrap CRP timer debugging is on
```

Related commands

debug ipv6 pim sparse-mode

undebug ipv6 pim sparse-mode

show ipv6 pim sparse-mode bsr-router

Overview Use this command to show the PIM-SMv6 Bootstrap Router (BSR) IPv6 address.

For information on filtering and saving command output, see the "Getting Started with AlliedWare Plus" Feature Overview and Configuration Guide.

Syntax

```
show ipv6 pim sparse-mode bsr-router
```

Mode User Exec and Privileged Exec

Example To display the BSR IPv6 address, use the command:

```
awplus# show ipv6 pim sparse-mode bsr-router
```

Output Figure 37-3: Example output from the **show ipv6 pim sparse-mode bsr-router** command

```
awplus#show ipv6 pim sparse-mode bsr-router
PIM6v2 Bootstrap information
  BSR address: 2001:203::213 (?)
  Uptime:      00:36:25, BSR Priority: 64, Hash mask length: 126
  Expires:     00:01:46
  Role: Candidate BSR
  State: Candidate BSR

  Candidate RP: 2001:5::211(vlan5)
    Advertisement interval 60 seconds
    Next C-RP advertisement in 00:00:43
```

Related commands

show ipv6 pim sparse-mode rp mapping

show ipv6 pim sparse-mode neighbor

show ipv6 pim sparse-mode interface

Overview Use this command to show PIM-SMv6 interface information. Note that you can specify an individual VLAN interface with the optional parameter. Alternatively, you can display PIM-SMv6 interface information for all interfaces if you omit the optional interface parameter.

For information on filtering and saving command output, see the "Getting Started with AlliedWare Plus" Feature Overview and Configuration Guide.

Syntax

```
show ipv6 pim sparse-mode interface
```

Mode User Exec and Privileged Exec

Examples To display information about all PIM-SMv6 interfaces, use the command:

```
awplus# show ipv6 pim sparse-mode interface
```

```
awplus#show ipv6 pim sparse-mode interface
Interface VIFindex Ver/   Nbr    DR
                   Mode   Count  Priority
vlan2     0        v2/S   2      1
    Address       : fe80::207:e9ff:fe02:81d
    Global Address: 3ffe:192:168:1::53
    DR            : fe80::20e:cff:fe01:facc
vlan3     2        v2/S   2      1
    Address       : fe80::207:e9ff:fe02:21a2
    Global Address: 3ffe:192:168:10::53
    DR            : this system
```

Table 1: Parameters in the output from the **show ipv6 pim sparse-mode interface** command

Parameters	Description
Address	Primary PIM-SMv6 address.
Interface	Name of the PIM-SMv6 interface.
VIF Index	The Virtual Interface index of the VLAN.
Ver/Mode	PIMv6 version/Sparse mode.
Nbr Count	Neighbor count of the PIM-SMv6 interface.
DR Priority	Designated Router priority.
DR	The IPv6 address of the Designated Router.

Related commands

ipv6 pim sparse-mode

show ipv6 pim sparse-mode rp mapping

show ipv6 pim sparse-mode neighbor

show ipv6 pim sparse-mode interface detail

Overview Use this command to show detailed PIM-SMv6 information for all PIM-SMv6 configured interfaces.

For information on filtering and saving command output, see the "Getting Started with AlliedWare Plus" Feature Overview and Configuration Guide.

Syntax

```
show ipv6 pim sparse-mode interface detail
```

Mode User Exec and Privileged Exec

Example To show detailed PIM-SMv6 information for all PIM-SMv6 configured interfaces, use the command:

```
awplus# show ipv6 pim sparse-mode interface detail
```

Output Figure 37-4: Example output from the **show ipv6 pim sparse-mode interface detail** command

```
awplus#show ipv6 pim sparse-mode interface detail
vlan2 (vif 0)
  Address fe80::207:e9ff:fe02:81d, DR fe80::20e:cff:fe01:facc
  Hello period 30 seconds, Next Hello in 21 seconds
  Triggered Hello period 5 seconds
  Secondary addresses:
   3ffe:192:168:1::53
  Neighbors:
   fe80::202:b3ff:fed4:69fe
   fe80::20e:cff:fe01:facc

vlan3 (vif 2):
  Address fe80::207:e9ff:fe02:21a2, DR fe80::207:e9ff:fe02:21a2
  Hello period 30 seconds, Next Hello in 20 seconds
  Triggered Hello period 5 seconds
  Secondary addresses:
   3ffe:192:168:10::53
  Neighbors:
```

show ipv6 pim sparse-mode local-members

Overview Use this command to show detailed local member information on a VLAN interface configured for PIM-SMv6. If you do not specify a VLAN interface then detailed local member information is shown for all VLAN interfaces configured for PIM-SMv6.

For information on filtering and saving command output, see the "Getting Started with AlliedWare Plus" Feature Overview and Configuration Guide.

Syntax

```
show ipv6 pim sparse-mode local-members [<interface>]
```

Parameter	Description
<interface>	Optional Specify the interface. For instance, VLAN interface `vlan2`.

Mode User Exec and Privileged Exec

Example To show detailed PIM-SMv6 information for all PIM-SMv6 configured VLAN interfaces, use the command:

```
awplus# show ipv6 pim sparse-mode local-members
```

Output Figure 37-5: Example output from the **show ipv6 pim sparse-mode local-members** command

```
awplus#show ipv6 pim sparse-mode local-members
PIM Local membership information

vlan1:

  (*, ff02::1:ff6b:4783) : Include

vlan203:

  (*, ff0e:1::4) : Include
```

Example To show detailed PIM-SMv6 information for the PIM-SMv6 configured interface vlan1, use the command:

```
awplus# show ipv6 pim sparse-mode local-members vlan1
```

Output Figure 37-6: Example output from the **show ipv6 pim sparse-mode local-members vlan1** command

```
awplus#show ipv6 pim sparse-mode local-members vlan1
PIM Local membership information

vlan1:

  (*, ff02::1:ff6b:4783) : Include
```

show ipv6 pim sparse-mode mroute

Overview This command displays the IPv6 multicast routing table, or the IPv6 multicast routing table based on the specified IPv6 address or addresses.

Two group IPv6 addresses cannot be used simultaneously; two source IPv6 addresses cannot be used simultaneously.

For information on filtering and saving command output, see the "Getting Started with AlliedWare Plus" Feature Overview and Configuration Guide.

Syntax

```
show ipv6 pim sparse-mode mroute
[<group-IPv6-address>|<source-IPv6-address>]
```

```
show ipv6 pim sparse-mode mroute [<group-IPv6-address>
<source-IPv6-address>]
```

```
show ipv6 pim sparse-mode mroute [<source-IPv6-address>
<group-IPv6-address>]
```

Parameter	Description
<group-IPv6-address>	Group IPv6 address, entered in the form X:X::X:X. Based on the group and source IPv6 address, the output is the selected route if present in the multicast route tree.
<source-IPv6-address>	Source IPv6 address, entered in the form X:X::X:X. Based on the source and group IPv6 address, the output is the selected route if present in the multicast route tree.

Mode User Exec and Privileged Exec

Usage Note that when a feature license is enabled, the output for the show ipv6 pim sparse-mode mroute command will only show 100 interfaces because of the terminal display width limit. Use the show ipv6 pim sparse-mode mroute detail command to display detailed entries of the IPv6 multicast routing table.

Examples

```
awplus# show ipv6 pim sparse-mode mroute
```

```
awplus# show ipv6 pim sparse-mode mroute 2001:db8::
```

```
awplus# show ipv6 pim sparse-mode mroute 2001:db8:: 2002:db8::
```

Figure 37-7: Example output from the **show ipv6 pim sparse-mode mroute** command

```
awplus#show ipv6 pim sparse-mode mroute
IPv6 Multicast Routing Table

(*,*,RP) Entries: 0
(*,G) Entries: 2
(S,G) Entries: 0
(S,G,rpt) Entries: 0
FCR Entries: 2

(*, ff0x::db8:0:0/96)
RP: 3ffe:10:10:5::153
RPF nbr: fe80::202:b3ff:fed4:69fe
RPF idx: wm0
Upstream State: JOINED
 Local      ..l.....................................
 Joined     ........................................
 Asserted   ........................................
FCR:
Source: 3ffe:10:10:1::96
 Outgoing   ..o.....................................
 KAT timer running, 205 seconds remaining
 Packet count 1

(*, ff0x::db8:0:0/96)
RP: 3ffe:10:10:5::153
RPF nbr: fe80::202:b3ff:fed4:69fe
RPF idx: wm0
Upstream State: JOINED
 Local      ..l.....................................
 Joined     ........................................
 Asserted   ........................................
FCR:
Source: 3ffe:10:10:1::96
 Outgoing   ..o.....................................
 KAT timer running, 208 seconds remaining
 Packet count 1
```

show ipv6 pim sparse-mode mroute detail

Overview This command displays detailed entries of the IPv6 multicast routing table, or detailed entries of the IPv6 multicast routing table based on the specified IPv6 address or addresses.

Two group IPv6 addresses cannot be used simultaneously; two IPv6 source addresses cannot be used simultaneously.

For information on filtering and saving command output, see the "Getting Started with AlliedWare Plus" Feature Overview and Configuration Guide.

Syntax

```
show ipv6 pim sparse-mode mroute [<source-IPv6-address>] detail
```

Parameter	Description
<source-IPv6-address>	Source IPv6 address, entered in the form X:X::X:X. Output is all multicast entries belonging to that source.
`detail`	Show detailed information.

Usage Based on the group and source IPv6 address, the output is the selected route if present in the multicast route tree.

Mode User Exec and Privileged Exec

Examples

```
awplus# show ipv6 pim sparse-mode mroute detail
awplus# show ipv6 pim sparse-mode mroute 2001:db8:: detail
awplus# show ipv6 pim sparse-mode mroute 2001:db8:: 2002:db8:: detail
```

Figure 37-8: Example output from the **show ipv6 pim sparse-mode mroute detail** command

```
awplus#show ipv6 pim sparse-mode mroute detail
IPv6 Multicast Routing Table

(*,*,RP) Entries: 0
(*,G) Entries: 1
(S,G) Entries: 0
(S,G,rpt) Entries: 0
FCR Entries: 0

(*, ff13::10) Uptime: 00:00:09
  RP: ::, RPF nbr: None, RPF idx: None
  Upstream:
   State: JOINED, SPT Switch: Enabled, JT: off
   Macro state: Join Desired,
  Downstream:
   vlan2:
     State: NO INFO, ET: off, PPT: off
     Assert State: NO INFO, AT: off
      Winner: ::, Metric: 42949672951, Pref: 42949672951, RPT bit: on
     Macro state: Could Assert, Assert Track
  Local Olist:
   vlan3
  FCR:
```

show ipv6 pim sparse-mode neighbor

Overview Use this command to show the PIM-SMv6 neighbor information.

For information on filtering and saving command output, see the "Getting Started with AlliedWare Plus" Feature Overview and Configuration Guide.

Syntax

```
show ipv6 pim sparse-mode neighbor [<interface>]
[<IPv6-address>] [detail]
```

Parameter	Description
<interface>	Interface name (e.g. vlan2). Show neighbors on an interface.
<IPv6-address>	Show neighbors with a particular address on an interface. The IPv6 address entered in the form X:X::X:X.
detail	Show detailed information.

Mode User Exec and Privileged Exec

Examples

```
awplus# show ipv6 pim sparse-mode neighbor
awplus# show ipv6 pim sparse-mode neighbor vlan5 detail
```

Figure 37-9: Example output from the **show ipv6 pim sparse-mode neighbor** command

```
awplus#show ipv6 pim sparse-mode neighbor
Neighbor Address                     Interface   Uptime/Expires      DR
                                                                        Pri/Mode
fe80::202:b3ff:fed4:69fe              vlan2       05:33:52/00:01:41 1 /
fe80::20e:cff:fe01:facc               vlan3       05:33:53/00:01:26 1 / DR
```

Figure 37-10: Example output from the **show ipv6 pim sparse-mode neighbor interface detail** command

```
awplus#show ipv6 pim sparse-mode neighbor detail
Nbr fe80::211:11ff:fe44:4cd8 (vlan1), DR
 Expires in 64 seconds, uptime 00:00:53
 Holdtime: 70 secs, T-bit: off, Lan delay: 1, Override interval: 3
 DR priority: 100, Gen ID: 1080091886,
 Secondary addresses:
  3ffe:10:10:10:3::180
```

show ipv6 pim sparse-mode nexthop

Overview Use this command to see the next hop information as used by PIM-SMv6.

For information on filtering and saving command output, see the "Getting Started with AlliedWare Plus" Feature Overview and Configuration Guide.

Syntax

```
show ipv6 pim sparse-mode nexthop
```

Mode User Exec and Privileged Exec

Example

```
awplus# show ipv6 pim sparse-mode nexthop
```

Figure 37-11: Example output from the **show ipv6 pim sparse-mode nexthop** command

```
awplus#show ipv6 pim sparse-mode nexthop
Flags: N = New, R = RP, S = Source, U = Unreachable
Destination           Type  Nexthop Nexthop Nexthop  Nexthop Metric     Pref   Refcnt
                            Num     Addr    Ifindex  Name
_____________________________________________________________________________________
3ffe:10:10:5::153     .RS.  1       fe80::20e:cff:fe01:facc  2     30   110    1
```

Table 2: Parameters in output of the **show ipv6 pim sparse-mode nexthop** command

Parameter	Description
Destination	The destination address for which PIM-SMv6 requires next hop information.
Type	The type of destination, as indicated by the Flags description. N = New, R= RP, S = Source, U = Unreachable.
Nexthop Num	The number of next hops to the destination. PIM-SMv6 always uses only 1 next hop.
Nexthop Addr	The address of the primary next hop gateway.
Nexthop IfIndex	The interface on which the next hop gateway can be reached.
Nexthop Name	The name of next hop interface.
Metric	The metric of the route towards the destination.
Preference	The preference of the route towards destination.
Refcnt	Only used for debugging.

show ipv6 pim sparse-mode rp-hash

Overview Use this command to display the Rendezvous Point (RP) to be chosen based on the IPv6 group address selected.

For information on filtering and saving command output, see the "Getting Started with AlliedWare Plus" Feature Overview and Configuration Guide.

Syntax

```
show ipv6 pim sparse-mode rp-hash <IPv6-group-addr>
```

Parameter	Description
<IPv6-group-addr>	The IPv6 group address used to find the RP, entered in the form X:X::X:X.

Mode User Exec and Privileged Exec

Example

```
awplus# show ipv6 pim sparse-mode rp-hash ff04:10
```

Figure 37-12: Output from the **show ipv6 pim sparse-mode rp-hash** command:

```
awplus#show ipv6 pim sparse-mode rp-hash ff04::10
    RP: 3ffe:10:10:5::153
    Info source: 3ffe:10:10:5::153, via bootstrap
```

Related commands show ipv6 pim sparse-mode rp mapping

show ipv6 pim sparse-mode rp mapping

Overview Use this command to show group-to-RP (Rendezvous Point) mappings, and the RP set.

For information on filtering and saving command output, see the "Getting Started with AlliedWare Plus" Feature Overview and Configuration Guide.

Syntax

```
show ipv6 pim sparse-mode rp mapping
```

Mode User Exec and Privileged Exec

Example

```
awplus# show ipv6 pim sparse-mode rp mapping
```

Figure 37-13: Output from the **show ipv6 pim sparse-mode rp mapping** command

```
awplus#show ipv6 pim sparse-mode rp mapping
PIM Group-to-RP Mappings
Group(s): ff00::/8
  RP: 3ffe:10:10:5::153
    Info source: 3ffe:10:10:5::153, via bootstrap, priority 192
         Uptime: 05:36:40
```

Related commands show ipv6 pim sparse-mode rp-hash

show ipv6 pim sparse-mode rp nexthop

Overview Use this command to display the RP (Rendezvous Point) next hop information used by PIM-SMv6.

For information on filtering and saving command output, see the "Getting Started with AlliedWare Plus" Feature Overview and Configuration Guide.

Syntax

```
show ipv6 pim sparse-mode rp nexthop <RP-group-addr>
```

Parameter	Description
<RP-group-addr>	Specify the RP group address used to display next hop RP information, entered in the form X:X::X:X.

Mode User Exec and Privileged Exec

Example

```
awplus# show ipv6 pim sparse-mode rp nexthop 3ffe:10:10:5::153
```

Figure 37-14: Example output from the **show ipv6 pim sparse-mode rp nexthop** command

```
awplus#show ipv6 pim sparse-mode rp nexthop 3ffe:10:10:5::153
Flags: N = New, R = RP, S = Source, U = Unreachable
Destination           Type  Nexthop Nexthop Nexthop  Nexthop Metric     Pref   Refcnt
                            Num     Addr    Ifindex  Name
_____________________________________________________________________________________
3ffe:10:10:5::153     .RS.  1       fe80::20e:cff:fe01:facc  2     30   110    1
```

Table 3: Parameters in output of the **show ipv6 pim sparse-mode rp nexthop** command

Parameter	Description
`Destination`	The destination address for which PIM-SMv6 requires next hop information.
`Type`	The type of destination, as indicated by the Flags description. N = New, R= RP, S = Source, U = Unreachable.
`Nexthop Num`	The number of next hops to the destination. PIM-SMv6 always uses only 1 next hop.
`Nexthop Addr`	The address of the primary next hop gateway.
`Nexthop IfIndex`	The interface on which the next hop gateway can be reached.
`Nexthop Name`	The name of next hop interface.

Table 3: Parameters in output of the **show ipv6 pim sparse-mode rp nexthop** command (cont.)

Parameter	Description
`Metric`	The metric of the route towards the destination.
`Preference`	The preference of the route towards destination.
`Refcnt`	Only used for debugging.

undebug all ipv6 pim sparse-mode

Overview Use this command to disable all PIM-SMv6 debugging.

Syntax
```
undebug all ipv6 pim sparse-mode
```

Mode Privileged Exec

Example
```
awplus# undebug all ipv6 pim sparse-mode
```

Related commands debug ipv6 pim sparse-mode

undebug ipv6 pim sparse-mode

Overview Use this command to deactivate PIM-SMv6 debugging. Note that this command is an alias of the no variant of the debug ipv6 pim sparse-mode command.

Syntax

```
undebug ipv6 pim sparse-mode [all] [events] [mfc] [mib]
[nexthop] [nsm] [state] [timer]
```

Parameter	Description
`all`	Deactivates all PIM-SMv6 debugging.
`events`	Deactivates debug printing of PIM-SMv6 events.
`mfc`	Deactivates debug printing of MFC (Multicast Forwarding Cache).
`mib`	Deactivates debug printing of PIM-SMv6 MIBs.
`nexthop`	Deactivates debug printing of PIM-SMv6 next hop communications.
`nsm`	Deactivates debugging of PIM-SMv6 NSM (Network Services Module) communications.
`state`	Deactivates debug printing of state transition on all PIM-SMv6 FSMs.
`timer`	Deactivates debug printing of PIM-SMv6 timers.

Mode Privileged Exec and Global Configuration

Example

```
awplus# configure terminal
awplus(config)# terminal monitor
awplus(config)# undebug ipv6 pim sparse-mode all
awplus# configure terminal
awplus(config)# terminal monitor
awplus(config)# undebug ipv6 pim sparse-mode events
awplus# configure terminal
awplus(config)# terminal monitor
awplus(config)# undebug ipv6 pim sparse-mode nexthop
```

Validation Output

Figure 37-15: Example output from the **show debugging ipv6 pim sparse-mode** command after issuing the **undebug ipv6 pim sparse-mode all** command

```
awplus#undebug ipv6 pim sparse-mode all
awplus#show debugging ipv6 pim sparse-mode
PIM-SMv6 debugging status:
  PIM event debugging is off
  PIM MFC debugging is off
  PIM state debugging is off
  PIM packet debugging is off
  PIM Hello HT timer debugging is off
  PIM Hello NLT timer debugging is off
  PIM Hello THT timer debugging is off
  PIM Join/Prune JT timer debugging is off
  PIM Join/Prune ET timer debugging is off
  PIM Join/Prune PPT timer debugging is off
  PIM Join/Prune KAT timer debugging is off
  PIM Join/Prune OT timer debugging is off
  PIM Assert AT timer debugging is off
  PIM Register RST timer debugging is off
  PIM Bootstrap BST timer debugging is off
  PIM Bootstrap CRP timer debugging is off
  PIM mib debugging is off
  PIM nsm debugging is off
  PIM nexthop debugging is off
```

Related commands

debug ipv6 pim sparse-mode

show debugging ipv6 pim sparse-mode

undebug all ipv6 pim sparse-mode

Part 5: Access and Security

38 Traffic Control Commands

Introduction

Overview This chapter provides an alphabetical reference of commands used to configure traffic control. For more information, see the Traffic Control Feature Overview and Configuration Guide.

Command List

- "class (htb)" on page 1768
- "class (priority)" on page 1770
- "class (wrr)" on page 1772
- "debug traffic-control" on page 1774
- "interface (traffic-control)" on page 1775
- "l3-filtering enable" on page 1776
- "move rule (traffic-control)" on page 1777
- "policy (traffic-control)" on page 1778
- "red-curve" on page 1780
- "rule (traffic-control)" on page 1782
- "show debugging traffic-control" on page 1784
- "show running-config traffic-control" on page 1785
- "show traffic-control counters" on page 1787
- "show traffic-control interface" on page 1789
- "show traffic-control policy" on page 1791
- "show traffic-control red-curve" on page 1793
- "show traffic-control rule config-check" on page 1795
- "show traffic-control rule" on page 1796
- "show traffic-control" on page 1797

- "sub-class (htb)" on page 1798
- "sub-class (priority)" on page 1800
- "sub-class (wrr)" on page 1802
- "sub-sub-class (htb)" on page 1804
- "sub-sub-class (priority)" on page 1806
- "sub-sub-class (wrr)" on page 1808
- "traffic-control enable" on page 1810
- "traffic-control" on page 1811

class (htb)

Overview Use this command to configure a hierarchy token bucket (HTB) class within a traffic control policy.

Use the **no** variant of this command to delete an existing class under a current policy.

Syntax

```
class <class-name> [cir <committed-rate>] [pir <peak-rate>]
[bc <1-100000000>] [be <1-100000000>] [preference <0-7>]
[queue-length <2-65536>] [set-dscp <dscp-value>] [red-curve
<red-curve-name>]
```

```
class <class-name> [cir <committed-rate>] [pir <peak-rate>]
[bc <1-100000000>] [be <1-100000000>] [preference <0-7>]
sub-class-policy htb
```

```
no class <class-name>
```

Parameter	Description
<class-name>	Name of the class.
cir *<committed-rate>*	Set the Committed Information Rate (CIR) for the queue. This parameter is compulsory when creating a new class. When editing an existing class, this parameter is optional.
pir *<peak-rate>*	Set the Peak Information Rate (PIR) for the queue. This is the rate of the queue under peak conditions. Specified in kbit/mbit/gbit per second, in the range 1kbit-100gbit.
bc *<1-100000000>*	Set the Committed Burst size (BC). This is the burst allowed above the CIR sent at the PIR rate.
be *<1-100000000>*	Set the Excess Burst size (BE). This is the burst allowed above the PIR sent at the maximum rate.
preference *<0-7>*	Set the preference for a class to receive spare bandwidth. Preference for the class to receive spare bandwidth (highest is 7).
queue-length *<2-65536>*	Set the maximum queue length.
set-dscp *<dscp-value>*	Set the DSCP value to apply to the packets.
red-curve *<red-curve-name>*	Apply a random early discard template with the class (only available on leaf queues when specifying class policy). If the keyword <default> is used then the default RED curve is applied.
sub-class-policy	Specify that the class will contain sub-classes.
htb	Sub-classes will use the Hierarchy Token Bucket (HTB) queueing discipline.

Default BC and BE are assigned suitable values proportional to the CIR and PIR respectively, and are larger than the MTU. The PIR defaults to the CIR. The Preference defaults to 7 and the queue-length defaults to 1000 (if the class is a leaf). If the keyword <default> is used then the default RED curve is applied.

Mode Traffic-Control Policy for an HTB policy.

Usage If there is already a class in the same level that has the specified name, the command will replace the configuration of the existing class if it does not have any sub-classes.

If a sub-class policy is specified, this command uses the Traffic-Control Class mode to apply it.

Examples To configure a leaf class, use the commands:

```
awplus#configure terminal
awplus(config)#traffic-control
awplus(config-tc)#policy p01 htb
awplus(config-tc-policy)#class c01 cir 100mbit pir 150mbit
```

To configure a class with a sub-sub-class as the leaf class, use the commands:

```
awplus#configure terminal
awplus(config)#traffic-control
awplus(config-tc)#policy p01 htb
awplus(config-tc-policy)#class c01 cir 100mbit pir 150mbit
sub-class-policy htb
awplus(config-tc-class)#sub-class s01 cir 10mbit sub-sub-class
policy htb
awplus(config-tc-subclass)#sub-sub-class ss01 cir 5mbit
queue-length 200 red-curve ss01-red
```

To enter Traffic-Control Class mode for an existing class, use the commands:

```
awplus#configure terminal
awplus(config)#traffic-control
awplus(config-tc)#policy p01
awplus(config-tc-policy)#class c01
awplus(config-tc-class)#
```

To delete an existing class, use the commands:

```
awplus#configure terminal
awplus(config)#traffic-control
awplus(config-tc)#policy p01
awplus(config-tc-policy)#no class c01
```

Related Commands policy (traffic-control)

sub-class (htb)

traffic-control

class (priority)

Overview Use this command to configure a priority queue class within a traffic control policy.

Use the **no** variant of this command to delete an existing priority class under a current policy.

Syntax

```
class <class-name> [priority-level <0-15>] [max <max-rate>] [queue-length <2-65536>] [set-dscp <dscp-value>] [red-curve <red-curve-name>]
```

```
class <class-name> [priority-level <0-15>] sub-class-policy {priority|wrr|htb}
```

```
no class <class-name>
```

Parameter	Description
<class-name>	Name of the class.
priority-level *<0-15>*	Set the priority level (15 is the highest). This parameter is compulsory when creating a new class. When editing an existing class, this parameter is optional.
max *<max-rate>*	Set the maximum traffic rate of the queue (in kbit/mbit/gbit per second, 1kbit-100gbit).
queue-lenth *<2-65535>*	Set the maximum queue length in packets (only available on leaf queues when specifying sub-class policy).
set-dscp *<dscp-value>*	Set the DSCP value to apply to the packets (only available on leaf queues when specifying sub-class policy).
red-curve *<red-curve-name>*	Apply a random early discard template with the class (only available on leaf queues when specifying class policy). If the keyword <default> is used then the default RED curve is applied.
sub-class-policy	Create a sub-class within the policy.
priority	Sub-classes use the Priority Queue scheduling algorithm.
wrr	Sub-classes use the Weighted Round Robin scheduling algorithm.
htb	Sub-classes use the Hierarchy Token Bucket scheduling algorithm.

Default No priority class is applied. If the keyword <default> is used then the default RED curve is applied.

Mode Traffic Control Policy for a priority policy.

Usage If there is already a class in the same level with the specified name, the command will replace the configuration of the existing class if it does not have any sub-classes.

If a sub-class policy is specified, this command uses the Traffic-Control Class mode to apply it.

Examples

To configure a leaf class, use the commands:

```
awplus#configure terminal
awplus(config)#traffic-control
awplus(config-tc)#policy p01 priority
awplus(config-tc-policy)#class c01 priority-level 5
```

To configure a class with a sub-sub-class as the leaf class, use the commands:

```
awplus#configure terminal
awplus(config)#traffic-control
awplus(config-tc)#policy p01 priority
awplus(config-tc-policy)#class c01 priority-level 5
sub-class-policy priority
awplus(config-tc-class)#sub-class s01 priority-level 7
sub-sub-class-policy priority
awplus(config-tc-subclass)#sub-sub-class ss01 priority-level 3
max 5mbit queue-length 200 red-curve ss01-red
```

To enter Traffic-Control Class mode for an existing class, use the commands:

```
awplus#configure terminal
awplus(config)#traffic-control
awplus(config-tc)#policy p01
awplus(config-tc-policy)#class c01
awplus(config-tc-class)#
```

To delete an existing policy class, use the commands:

```
awplus#configure terminal
awplus(config)#traffic-control
awplus(config-tc)#policy p01
awplus(config-tc-policy)#no class c01
```

Related Commands

policy (traffic-control)

sub-class (htb)

sub-class (wrr)

traffic-control

class (wrr)

Overview Use this command to configure a Weighted Round-Robin (WRR) class within a traffic control policy.

Use the **no** variant of this command to delete an existing class under a current policy.

Syntax

```
class <class-name> [weight <1-100>] [queue-length <2-65536>]
[set-dscp <dscp-value>] [red-curve <red-curve-name>]
class <class-name> [weight <1-100>] sub-class-policy wrr
no class <class-name>
```

Parameter	Description
<class-name>	Name of the class.
weight *<1-100>*	Set the weight.The relative weight is the available bandwidth divided between sibling WRR classes according to the ratio of their configured weights. This parameter is compulsory when creating a new class. When editing an existing class, this parameter is optional.
queue-length *<2-65536>*	Set the maximum queue length in packets.
set-dscp *<dscp-value>*	Set the DSCP value to apply to packets.
red-curve *<red-curve-name>*	Apply a random early discard template with the class (only available on leaf queues when specifying class policy). If the keyword <default> is used then the default RED curve is applied.
sub-class-policy	Create a sub-class within the policy.
wrr	Sub-classes use the Weighted Round Robin queueing algorithm.

Default A weighted round-robin class has no DSCP value or sub-class policy. The queue length is 1000 by default. If the keyword <default> is used then the default RED curve is applied.

Mode Traffic-Control Policy for a WRR policy.

Usage If there is already a class in the same level with the specified name, the command will replace the configuration of the existing class if it does not have any sub-classes.

If a sub-class policy is specified, this command uses the Traffic-Control Class mode to apply it.

Examples

To configure a leaf class, use the commands:

```
awplus#configure terminal
awplus(config)#traffic-control
awplus(config-tc)#policy p01 wrr
awplus(config-tc-policy)#class c01 weight 50
```

To configure a class with a sub-sub-class as the leaf class, use the commands:

```
awplus#configure terminal
awplus(config)#traffic-control
awplus(config-tc)#policy p01 wrr
awplus(config-tc-policy)#class c01 weight 50 sub-class-policy
wrr
awplus(config-tc-class)#sub-class s01 weight 30 sub-sub-class-
policy wrr
awplus(config-tc-subclass)#sub-sub-class ss01 weight 5
queue-length 200 red-curve ss01-red
```

To enter Traffic-Control Class mode for an existing class, use the commands:

```
awplus#configure terminal
awplus(config)#traffic-control
awplus(config-tc)#policy p01
awplus(config-tc-policy)#class c01
awplus(config-tc-class)#
```

To delete an existing class, use the commands:

```
awplus#configure terminal
awplus(config)#traffic-control
awplus(config-tc)#policy p01
awplus(config-tc-policy)#no class c01
```

Related Commands

traffic-control

policy (traffic-control)

sub-class (wrr)

debug traffic-control

Overview Use this command to enable traffic-control debugging. This will cause additional detailed debugging information to be logged and available using the show debugging traffic-control.

Use the **no** variant of this command to disable traffic-control debugging.

Syntax

```
debug traffic-control
no debug traffic-control
```

Default Disabled

Mode Privileged Exec

Examples To enable traffic control debugging, use the commands:

```
awplus#debug traffic-control
```

To disable traffic control debugging, use the commands:

```
awplus#no debug traffic-control
```

Related Commands traffic-control

show debugging traffic-control

interface (traffic-control)

Overview Use this command to configure interface specific parameters for traffic control.

Syntax

```
interface <interface-name> {overhead
[<overhead-bytes>|ethernet]|virtual-bandwidth
<bandwidth>|system-bandwidth <system-percentage>}
```

Parameter	Description
<interface-name>	Name of interface to configure
overhead	Set overhead to add to each packet when calculating the packet size
<overhead-bytes>	Number of bytes to add to the packet for packet size calculations. The range is from 0 to 512 and the default is 0.
ethernet	Setting the overhead to 'ethernet' adds 24 bytes to the packet to account for preamble + CRC + inter-frame gap.
virtual-bandwidth	Specify the virtual-bandwidth of the interface. This is the maximum amount of traffic that traffic control will allow to be sent via the interface..
<bandwidth>	Value for the virtual bandwidth in kbit, mbit or gbits. For example 5mbit.
system-bandwidth	Specify the percentage of the interface bandwidth to reserve for system traffic. The default when a traffic control policy is applied to the interface is 5%.
<system-percentage>	Percentage of the bandwidth to reserve for system traffic in the range from 1 to 99.

Default The default overhead is 0, the default bandwidth is the interface speed if it can be read. It is recommended to always set the virtual bandwidth when using traffic control. The system bandwidth default is 5%.

Mode Traffic-Control

Usage This command allows configuring traffic control parameters specific to the traffic egress interface.

Examples To rate limit eth1 to 10mbit while taking into account the ethernet framing overhead and reserving only 1% of the bandwidth for system traffic, use the commands:

```
awplus#configure terminal
awplus(config)#traffic-control
awplus(config-tc)#interface eth1 overhead ethernet
virtual-bandwidth 10mbit system-bandwidth 1
```

Related Commands

show running-config traffic-control

show traffic-control interface

l3-filtering enable

Overview Use this command to enable traffic control for bridged traffic on a bridge interface.

Use the **no** variant of this command to disable traffic control for bridged traffic on a bridge interface.

Syntax

```
l3-filtering enable
no l3-filtering enable
```

Default Traffic control is disabled by default for bridged traffic.

Mode Interface mode for a bridge interface

Example To enable traffic control for bridged traffic on br1, use the commands:

```
awplus# configure terminal
awplus(config)# interface br1
awplus(config-if)# l3-filtering enable
```

Related Commands traffic-control

Command changes Version 5.4.7-0.1: command added. Previously, traffic control was enabled by default on all bridge interfaces.

move rule (traffic-control)

Overview Use this command to change the identification of an existing traffic control rule.

Syntax

```
move rule [<1-65535> to <1-65535>]
```

Parameter	Description
<1-65535>	Range of the rule ID to move from
<1-65535>	Range of the destination ID for the rule to move to

Default None

Mode Traffic-Control

Example To change rule ID 10 to rule ID 25, use the commands:

```
awplus#cofigure terminal
awplus(config)#traffic-control
awplus(config-tc)#move rule 10 to 25
```

Related Commands

rule (traffic-control)

traffic-control

show traffic-control

show traffic-control rule

show traffic-control rule config-check

policy (traffic-control)

Overview Use this command to configure a traffic control policy, that can then be used with rules that have been created.

Use the **no** variant of this command to delete an existing policy.

Syntax

```
policy <policy-name> [priority|wrr|htb]
no policy <policy-name>
```

Parameter	Description
<policy_name>	The name of the policy
priority	Use Priority Queueing (PQ)
wrr	Use Weighted Round Robin (WRR)
htb	Use Hierarchy Token Bucket (HTB)

Default No policies are configured

Mode Traffic-Control

Usage A policy specifies a top-level queueing discipline which determines the type of classes that can be configured under the policy. This command uses the Traffic-Control Policy mode.

Examples To configure a policy, use the commands:

```
awplus#configure terminal
awplus(config)#traffic-control
awplus(config-tc)#policy p01 htb
awplus(config-tc-policy)#
```

To delete an existing policy, use the commands:

```
awplus#configure terminal
awplus(config)#traffic-control
awplus(config-tc)#no policy p01 htb
```

Related Commands

class (htb)

class (priority)

class (wrr)

rule (traffic-control)

traffic-control

sub-class (htb)

sub-class (priority)

sub-class (wrr)

sub-sub-class (htb)

sub-sub-class (priority)

sub-sub-class (wrr)

red-curve

Overview Use this command to allow configuration of a RED (Random Early Discard) curve template.

Use the **no** variant of this command to set the RED curve back to the default.

Syntax

```
red-curve <red-curve-name> [limit <4-127>] [avpkt <64-1518>]
[min <3-126>] [max <4-127>] [probabilty <1-100>]
[ecn [ecn-drop]]
```

```
no red-curve [<red-curve-name>]
```

Parameter	Description
<red-curve-name>	The RED curve name.
`limit` *<4-127>*	The hard queue length limit (in packets) for the RED curve. Once the queue length reaches the limit, all packets are dropped.
`avpkt` *<64-1518>*	The average packet size to use for queue size calculations in bytes.
`min` *<3-126>*	The minimum queue length for random early discard (in packets). Between <min> and <max> the drop probability will increase linearly.
`max` *<4-127>*	The maximum queue length where packets are probabilistically dropped. At <max> the drop probability equals <probability>. Beyond <max> the drop or marking probability is 100%.
`probability` *<1-100>*	The probability of a packet being dropped when queue-length reaches <max>. The drop probability increases linearly from 0 to <probability> in between <min> and <max>.
`ecn`	Use explicit congestion notification marking instead of dropping the packet.
`ecn-drop`	When average queue size exceeds <max> drop packets instead of marking.

Default The default RED curve is **red-curve default limit 127 avpkt 576B min 10 max 32 prob 2**.

Mode Traffic-control

Usage The RED curve template can later be applied to a traffic control class, sub-class, or sub-sub-class.

Example To configure a RED curve with ECN dropping and the default curve shape, use the commands:

```
awplus# configure terminal
awplus(config)# traffic-control
awplus(config-tc)# red-curve red-ecn ecn
```

To configure an aggressive RED curve, use the commands:

```
awplus# configure terminal
awplus(config)# traffic-control
awplus(config-tc)# red-curve aggressive min 5 max 50
probability 70
```

Related Commands

class (htb)

class (priority)

class (wrr)

show traffic-control policy

show running-config traffic-control

show traffic-control red-curve

sub-class (htb)

sub-class (priority)

sub-class (wrr)

sub-sub-class (htb)

sub-sub-class (priority)

sub-sub-class (wrr)

rule (traffic-control)

Overview Use this command to create a traffic-control rule.

Use the **no** variant of this command to remove a traffic-control rule

Syntax

```
rule [<1-65535>] match <application> from <source-entity> to
<destination-entity> policy <policy>
```

```
no rule [<1-65535>]
```

Parameter	Description
<1-65535>	The rule ID is an integer in the range from 1 to 65535. If you do not designate a rule ID, one will be automatically generated and it will be greater than the current highest rule ID. Lower IDs have higher priority.
`match`	Application traffic to match
<application>	Application name
`from`	Set the source of the entity
<source_entity>	Source entiity name. Entities represent logical grouping of subnets, hosts or interfaces.
`to`	Set the destination of the entity
<destination_entity>	Source entiity name. Entities represent logical grouping of subnets, hosts or interfaces.
`policy`	Policy to apply to matched traffic
<policy>	Traffic control policy. This consists of a top-level policy name followed by the name of a class within that policy, and sub-class (of the class) and a sub-sub-calss if applicable. Examples are: p01.c03 p01.c03.sc02 p01.c03.scc02.ssc01 P01 is the policy name, c03 is the class name,sc02 is the sub-class, and ssc01 is the sub-sub-class..

Default No rules

Mode Traffic-Control

Usage Rules are used to apply traffic-control policies to a type of traffic. When traffic control is enabled and no rules are added, a default traffic-control policy is installed on all supported interfaces.

If the application, source entity or destination entity specified in the rule is not configured correctly, the rule is not valid and is not installed.

You can change the rule order by using the move rule (traffic-control) command.

Rules are applied to destination interfaces in the order of their ID (lower IDs are applied first). If traffic matches a rule, then the rest are ignored. If traffic does not match any rule, then it is classified to the default class.

A rule can specify the system class as the policy. System traffic is high priority traffic that is allocated a fixed amount of bandwidth on an interface. Use the interface (traffic-control) command to configure system bandwidth on an interface.

Examples To configure a rule, use the commands:

```
awplus#configure terminal
awplus(config)#traffic-control
awplus(config-tc)#rule 10 match ftp from wan to private policy p01.c02.sc03
```

To delete a rule, use the commands:

```
awplus#configure terminal
awplus(config)#traffic-control
awplus(config-tc)#no rule 10
```

Related Commands

interface (traffic-control)

move rule (traffic-control)

policy (traffic-control)

traffic-control

show running-config traffic-control

show traffic-control rule

show debugging traffic-control

Overview Use this command to display the status of traffic control debugging

Syntax

```
show debugging traffic-control
```

Default None

Mode Privileged Exec

Example To show if traffic-control debugging is on or off, run the command:

```
awplus#show debugging traffic-control
```

Output Figure 38-1: Example output from **show debugging traffic-control**

```
awplus#show debugging traffic-control
Traffic-control Debugging Status: off
```

Related Commands

debug traffic-control

show debugging

show running-config traffic-control

Overview Use this command to display the current traffic control configuration.

Syntax
```
show running-config traffic-control
```

Default None

Mode Privileged Exec

Example To show the traffic control configuration section of the running configuration, use the command:

```
awplus#show running-config traffic-control
```

Output Figure 38-2: Example output from **show running-config traffic-control**

```
awplus#show running-config traffic-control
traffic-control
 policy A wrr
  class B5001 weight 30
  class B5002 weight 60
 policy P priority
  class P10 priority-level 10 max 5mbit
  class P3 priority-level 3 max 8mbit sub-class-policy htb
   sub-class H cir 3mbit bc 100000
   sub-class I cir 5mbit bc 100000
  class P2 priority-level 2
 policy token-bucket htb
  class A cir 5mbit pir 6mbit preference 2
  class B cir 2mbit pir 4mbit bc 100000 be 100000 preference 3 sub-class-policy htb
   sub-class C cir 1mbit pir 4mbit bc 50000
   sub-class D cir 1mbit pir 4mbit bc 50000 sub-sub-class-policy htb
   sub-sub-class E cir 500kbit pir 4mbit bc 50000 set-dscp af23
   sub-sub-class F cir 500kbit pir 4mbit bc 50000 set-dscp af31
 rule 10 match udp-5001 from ipv6.vlan3 to ipv6.eth2 policy A.B5001
 rule 20 match udp-5002 from ipv6.vlan3 to ipv6.eth2 policy A.B5002
 rule 30 match udp-5001 from main.vlan to main.wan policy A.B5001
 rule 40 match udp-5002 from main.vlan to main.wan policy A.B5002
 rule 50 match udp-5002 from main.vlan to main.eth1 policy A.B5002
 interface eth2 virtual-bandwidth 2mbit overhead ethernet
 traffic-control enable
```

Related Commands

interface (traffic-control)

show running-config

show traffic-control counters

show traffic-control interface

show traffic-control policy

show traffic-control rule

show traffic-control rule config-check

traffic-control

show traffic-control counters

Overview Use this command to display counters related to traffic control. This command displays counters for the number of packets sent, queued or dropped by each traffic control class. The information is shown by each interface. There is an overall counter for the policy, and counters for each leaf class in the policy.

If no interface name is specified then information for all interfaces with traffic control policies applied is displayed.

Syntax

```
show traffic-control counters [<interface-name>]
```

Parameter	Description
<interface-name>	Name of Interface to display traffic control counters

Default None

Mode Privileged Exec

Examples To show the traffic control counters for all interfaces, use the commands:

```
awplus#show traffic-control counters
```

Figure 38-3: Example output from **show traffic-control counters**

```
awplus#show traffic-control counters
Traffic Control Counters
Interface eth1:
Class            Counter                Bytes               Packets
-------------------------------------------------------------------
A                Sent                       0                     0
                 Currently Queued           0                     0
                 Dropped                                          0

A.B5001          Sent                       0                     0
                 Currently Queued           0                     0
                 Dropped                                          0

A.B5002          Sent                       0                     0
                 Currently Queued           0                     0
                 Dropped                                          0

A.default        Sent                       0                     0
                 Currently Queued           0                     0
                 Dropped                                          0

system           Sent                       0                     0
                 Currently Queued           0                     0
                 Dropped                                          0
```

```
Interface eth2:
Class            Counter                 Bytes             Packets
-------------------------------------------------------------------
A                Sent                 58681224              232862
                 Currently Queued            0                 383
                 Dropped                                     1039845

A.B5001          Sent                 10671444               42347
                 Currently Queued        32004                 128
                 Dropped                                      164954

A.B5002          Sent                 17661924               70087
                 Currently Queued        32004                 127
                 Dropped                                      123470

A.default        Sent                 30348360              120430
                 Currently Queued        32004                 128
                 Dropped                                      751421
system           Sent                       42                   1
                 Currently Queued            0                   0
                 Dropped                                         0
```

Related Commands show running-config traffic-control

show traffic-control interface

Overview Use this command to display information about interfaces known to traffic control, such as the applied policy, the virtual-bandwidth configured on the interface, the bandwidth reserved for system traffic and the overhead applied to the packet size calculations. If no interface name is specified, information is shown for all interfaces known to traffic control.

Syntax

```
show traffic-control interface [<interface-name>]
```

Parameter	Description
<interface-name>	Name of interface to display information

Default None

Mode Privileged Exec

Examples To show traffic control information for all interfaces, use the command:

```
awplus#show traffic-control interface
```

Output Figure 38-4: Example output from **show traffic-control interface**

```
awplus#show traffic-control interface
Traffic Control Interface Information

eth1:

Policy:               A
Virtual bandwidth:    Not set (optional)
System bandwidth:     5%
Packet overhead:      0 Bytes

eth2:
Policy:               A
Virtual bandwidth:    2000 kbit
System bandwidth:     5%
Packet overhead       24 Bytes (Ethernet transport layer)

vlan1:
Policy:               Default policy
Virtual bandwidth:    Not set (optional)
Packet overhead:      0 Bytes
```

```
vlan10:
Policy:                 Default policy
Virtual bandwidth:      Not set (optional)
Packet overhead:        0 Bytes

vlan3:
Policy:                 Default policy
Virtual bandwidth:      Not set (optional)
Packet overhead:        0 Bytes

vlan4:
Policy:                 Default policy
Virtual bandwidth:      Not set (optional)
Packet overhead:        0 Bytes

vlan666:
Policy:                 Default policy
Virtual bandwidth:      Not set (optional)
Packet overhead:        0 Bytes
```

Related Commands

interface (traffic-control)

show running-config traffic-control

show traffic-control policy

Overview Use this command to show information about the configured traffic control policies and classes. This command shows the configured traffic control policies and the interfaces that they are applied to. Only non-default configuration parameters are shown.

If no policy name is given, all configured policies are displayed.

Syntax

```
show traffic-control policy [<policy-name>]
```

Parameter	Description
<policy-name>	Name of policy to display

Default None

Mode Privileged Exec

Examples To show all traffic control policies, use the command:

```
awplus#show traffic-control policy
```

Output Figure 38-5: Example output from **show traffic-control policy**

```
awplus#show traffic-control policy
Traffic Control Policies:
Policy A:
  Type:                     wrr
  Applied interfaces:       eth1 eth2
  Classes:
    Class B5001:
     Weight:                30
    Class B5002:
     Weight:                60
     Red curve:             default
Policy P:
  Type:                     priority
  Applied interfaces:       None
  Classes:
    Class P10:
     Priority:              10
     Peak rate (PIR):       5000kbit
    Class P3:
     Priority:              3
     Peak rate (PIR):       8000kbit
     Sub-queue type:        htb
     Red curve              TCP_session_1
```

```
    Class H:
     Committed rate (CIR):  3000kbit
     Burst (Bc):            100000B
    Class I:
     Committed rate (CIR):  5000kbit
     Burst (Bc):            100000B
    Class P2:
     Priority:              2
     Red curve:            TCP_session_2
Policy token-bucket:
  Type:                     htb
  Applied interfaces        None
  Classes:
    Class A:
     Committed rate (CIR):  5000kbit
     Peak rate (PIR):       6000kbit
     Preference:            2
    Class B:
     Committed rate (CIR):  2000kbit
     Peak rate (PIR):       4000kbit
     Burst (Bc):            100000B
     Excess Burst (Be):     100000B
     Preference:            3
     Sub-queue type:        htb
    Class C:
     Committed rate (CIR):  2000kbit
     Peak rate (PIR):       4000kbit
     Burst (BC):            50000B
    Class D:
     Committed rate (CIR):  1000kbit
     Peak rate (PIR):       4000kbit
     Burst (Bc):            50000B
     Sub-queue type:        htb
    Class E:
     Committed rate (CIR):  500kbit
     Peak rate (PIR):       4000kbit
     Burst (Bc):            50000B
     Set DSCP:              af23
    Class F:
     Committed rate (CIR):  500kbit
     Peak rate (PIR):       4000kbit
     Burst (Bc):            50000B
     Set DSCP:              af31
```

Related Commands

show running-config

show running-config traffic-control

show traffic-control red-curve

Overview Use this command to show configured RED curve templates.

Syntax

```
show traffic-control red-curve <red-curve-name>
```

Parameter	Description
<red-curve-name>	The name of the RED curve. The default RED curve is **red-curve default limit 127 avpkt 576B min 10 max 32 prob 2.**

Default None

Mode Privileged Exec

Usage If you have not configured some parameters, default values will display. If no RED curve name is given, all configured RED curves are shown.

Example To show all RED curves, use the command:

```
awplus# show traffic-control red-curve
```

To show a specified red curve called “TCP_session_1”, use the command:

```
awplus# show traffic-control red-curve TCP_session_1
```

Output Figure 38-6: Example output from **show traffic-control red-curve**

```
awplus#show traffic-control red-curve
Traffic Control RED Curves:

RED curve default:
 Average packet size: 576 bytes
 Minimum: 10 packets
 Maximum: 32 packets
 Limit: 127 packets
 Drop probability: 2%
 ECN marking: disabled

RED curve TCP_session_1:
 Average packet size: 576 bytes
 Minimum: 20 packets
 Maximum: 60 packets
 Limit: 127 packets
 Drop probability: 20%
 ECN marking: disabled
```

Figure 38-7: Example output from **show traffic-control red-curve TCP_session_1**

```
awplus#show traffic-control red-curve TCP_session_1
Traffic Control RED Curves
RED curve TCP_session_1:
Average packet size: 576 bytes
Minimum: 20 packets
Maximum: 60 packets
Limit: 127 packets
Drop probability: 20%
ECN marking: disabled
```

Related Commands

red-curve

show running-config

show running-config traffic-control

show traffic-control policy

show traffic-control rule config-check

Overview Use this command to show information about traffic control rule validity.

Syntax

```
show traffic-control rule config-check
```

Default None

Mode Privileged Exec

Usage An asterisk is printed before each rule that is invalid. To help determine why the rule is invalid, the show traffic-control rule config-check command will print the reasons why the rule is invalid. Information is only shown for invalid rules. If all rules are valid, a message will be printed showing all rules are valid.

Example To check if configured rules are valid, use the commands:

```
awplus#show traffic-control rule config-check
```

Output Figure 38-8: Example output from **show traffic-control rule config-check**

```
awplus#show traffic-control rule config-check

Rule 30:
  "From" entity does not exist
  "To" entity does not exist
  Policy doesn't exist or is not leaf
```

Related Commands

move rule (traffic-control)

rule (traffic-control)

show traffic-control rule

show running-config traffic-control

show traffic-control rule

Overview Use this command to show specific rules or a complete list of rules configured for traffic control.

Syntax

```
show traffic-control rule [<1-65535>]
```

Parameter	Description
<1-65535>	The ID of the rule you want to display. If no ID is entered, all rules are displayed.

Default None

Mode Privileged Exec

Usage An asterisk will be printed at the start of a row if the rule is invalid. The rules are shown in a table showing the rule ID, the application, source and destination that the rule matches on and the policy and class that the matching traffic will be sent to.

Examples To show a list of all traffic control rules configured, use the command:

```
awplus#show traffic-control rule
```

To show traffic control rule 10 configured, use the command:

```
awplus#show traffic-control rule 10
```

Output Figure 38-9: Example output from **show traffic-control rule**

```
awplus#show traffic-control rule

[* - Rule is not valid - see "show traffic-control rule config-check"]
  ID      APP         From              To               Policy
-------------------------------------------------------------------
  10      udp-5001    ipv6.vlan3        ipv6.eth2        A.B5001
  20      udp-5002    ipv6.vlan3        ipv6.eth2        A.B5002
* 30      aserf       asdf              fasdf            sadf.asdf
```

Related Commands

move rule (traffic-control)

rule (traffic-control)

show running-config traffic-control

show traffic-control

show traffic-control rule config-check

show traffic-control

Overview Use this command to display a brief overview of the status of the traffic control information on the router.

Syntax

```
show traffic-control
```

Mode Privileged Exec

Usage This command shows if traffic control is enabled, how many rules are configured and how many interfaces have a virtual bandwidth applied.

Example To show an overview of the status of the traffic control information, use the commands:

```
awplus# show traffic-control
```

Output Figure 38-10: Example output from **show traffic-control**

```
awplus#show traffic-control
Traffic control is enabled
Policy configured on 5 interfaces
2 rules configured (2 valid rules)
Virtual-bandwidth configured on 1 interfaces
```

Related Commands traffic-control

traffic-control enable

sub-class (htb)

Overview Use this command to configure a hierarchy token bucket (HTB) sub-class within an existing class.

Use the **no** variant of this command to delete an existing sub-class under the current class.

Syntax

```
sub-class <class-name> [cir <committed-rate>] [pir <peak-rate>] [bc <1-100000000>] [be <1-100000000>] [preference <0-7>] [queue-length <2-65536>] [set-dscp <dscp-value>] [red-curve <red-curve-name>]
```

```
sub-class <class-name> [cir <committed-rate>] [pir <peak-rate>] [bc <1-100000000>] [be <1-100000000>] [preference <0-7>] sub-sub-class-policy htb
```

```
no sub-class <class-name>
```

Parameter	Description
<class-name>	Name of the class.
cir *<committed-rate>*	Set the Committed Information Rate (CIR) for the queue. Specified in kbit/mbit/gbit per second, 1kbit-100gbit. This parameter is compulsory when creating a new sub-class. When editing an existing sub-class, this parameter is optional.
pir *<peak-rate>*	Set the Peak Information Rate (PIR) for the queue. This is the rate of the queue under peak conditions. Specified in kbit/mbit/gbit per second, in the range 1kbit-100gbit.
bc *<1-100000000>*	Set the Committed Burst size (BC). This is the burst allowed above the CIR, sent at the PIR rate.
be *<1-100000000>*	Set the Excess Burst size (BE). This is the burst allowed above the PIR, sent at the maximum rate.
preference *<0-7>*	Set the preference for a class to receive spare bandwidth (highest is 7).
queue-length *<2-65536>*	Set the maximum queue length in packets.
set-dscp *<dscp-value>*	Set the DSCP value to apply to the packets.
red-curve *<red-curve-name>*	Apply a random early discard template with the sub-class and enter the name of the red curve template to apply.
sub-sub-class-policy	Specify that the sub-class will contain sub-sub-classes.
htb	Sub-sub-classes will use the Hierarchy Token Bucket (HTB) queueing discipline.

Default BC and BE are assigned suitable values proportional to the CIR and PIR respectively and are larger that the MTU. PIR defaults to the CIR. Preference defaults to 7 and the queue length default to 1000 if the class is a leaf.

Mode Traffic-Control Class for an HTB sub-class policy.

Usage

If there is already a sub-class in the same level with the specified name, the command will replace the configuration of the existing sub class if it does not have any sub-sub-classes.

If you specify a sub-sub-class policy, this command puts you into sub-class mode so you can specify the sub-sub-class.

Examples

To configure a leaf sub-class, use the commands:

```
awplus#configure terminal
awplus(config)#traffic-control
awplus(config-tc)#policy p01 htb
awplus(config-tc-policy)#class c01 cir 100mbit pir 150mbit
sub-class-policy htb
wplus(config-tc-class)#sub-class s02 cir 20mbit queue-length
200 red-curve s02-red
```

To enter Traffic-Control Class mode for an existing sub-class, use the commands:

```
awplus#configure terminal
awplus(config)#traffic-control
awplus(config-tc)#policy p01
awplus(config-tc-policy)#class c01
awplus(config-tc-class)#sub-class s01
awplus(config-tc-subclass)#
```

To delete an existing sub-class, use the commands:

```
awplus#configure terminal
awplus(config)#traffic-control
awplus(config-tc)#policy p01
awplus(config-tc-policy)#class c01
awplus(config-tc-class)#no sub-class s01
```

Related Commands

class (htb)

class (priority)

policy (traffic-control)

sub-sub-class (htb)

traffic-control

sub-class (priority)

Overview Use this command to configure a priority queue sub-class within a class.

Use the **no** variant of this command to delete an existing sub-class under the current class.

Syntax

```
sub-class <class-name> [priority-level <0-15>] [max <max-rate>]
[queue-length <2-65536>] [set-dscp <dscp_value>] [red-curve
<red-curve-name>]
```

```
sub-class <class-name> [priority-level <0-15>]
sub-sub-class-policy {priority|wrr|htb}
```

```
no sub-class <class-name>
```

Parameter	Description
<class-name>	Name of the class.
priority-level *<0-15>*	Set the priority level (15 is the highest). This parameter is compulsory when creating a new sub-class. When editing an existing sub-class, this parameter is optional.
max *<max-rate>*	Set the maximum traffic rate of the queue (in kbit/mbit/gbit per second, 1kbit-100gbit).
queue-length *<2-65536>*	Set the maximum queue length in packets.
set-dscp*<dscp-value>*	Set the DSCP value to apply to the packets.
red-curve *<red-curve-name>*	Apply a random early discard template with the sub class and enter the name of the red curve template to apply.
sub-sub-class-policy	Create a sub-sub-class for the policy.
priority	Sub-sub-classes will use the Priority Queue queueing algorithm.
wrr	Sub-sub-classes will use the Weighted Round Robin (WRR) queueing algorithm.
htb	Sub-classes will use the Hierarchy Token Bucket (HTB) queueing algorithm.

Default A priority queue sub class has no max rate, DSCP value or sub-sub class policy. The queue length is 1000 by default if the class is a leaf.

Mode Traffic-Control Class for a priority sub-class policy.

Usage If there is already a sub-class in the same level with the specified name, the command will replace the configuration of the existing sub class if it does not have any sub-sub classes.

If a sub-sub class policy is specified, this command uses the Traffic-Control Class mode to apply it.

Examples

To configure a sub-class as the leaf class, use the commands:

```
awplus#configure terminal
awplus(config)#traffic-control
awplus(config-tc)#policy p01 priority
awplus(config-tc-policy)#class c01 priority-level 5
sub-class-policy priority
awplus(config-tc-class)#sub-class s02 priority-level 8 max
50mbit queue-length 200 red-curve ss01-red
```

To enter Traffic-Control Class mode for an existing sub-class, use the commands:

```
awplus#configure terminal
awplus(config)#traffic-control
awplus(config-tc)#policy p01 priority
awplus(config-tc-policy)#class c01
awplus(config-tc-class)#sub-class s01
awplus(config-tc-subclass)#
```

To delete an existing class, use the commands:

```
awplus#configure terminal
awplus(config)#traffic-control
awplus(config-tc)#policy p01
awplus(config-tc-policy)#class c01
awplus(config-tc-class)#no sub-class s01
```

Related Commands

class (priority)

policy (traffic-control)

sub-sub-class (htb)

sub-sub-class (priority)

sub-sub-class (wrr)

traffic-control

sub-class (wrr)

Overview Use this command to configure a Weighted Round-Robin (WRR) sub-class within a class.

Use the **no** variant of this command to delete an existing sub-class under the current class.

Syntax

```
sub-class <class-name> [weight <1-100>] [queue-length <2-65536>]  [set-dscp <dscp-value>] [red-curve <red-curve-name>]
```

```
sub-class <class-name> [weight <1-100>] sub-sub-class-policy wrr
```

```
no sub-class <class-name>
```

Parameter	Description
<class-name>	Name of the sub-class.
weight*<1-100>*	Set the weight.The relative weight is the available bandwidth divided between sibling WRR classes according to the ratio of their configured weights. This parameter is compulsory when creating a new sub-class. When editing an existing sub-class, this parameter is optional.
queue-length*<2-65536>*	Set the maximum queue length in packets.
set-dscp	Set the DSCP value to apply to packets.
<dscp-value>	DSCP value as an integer or lower-case DSCP name.
red curve *<red-curve-name>*	Apply a random early discard template with the sub-class and enter the name of the red curve template to apply.
sub-sub-class-policy	Create a sub-sub-class within the policy.
wrr	Sub sub classes use the Weighted Round Robin queueing discipline.

Default A weighted round-robin sub class has no DSCP value or sub-sub-class policy. The queue length is 1000 by default.

Mode Traffic-Control Class for a WRR sub-class policy.

Usage If there is already a class in the same level with the specified name, the command will replace the configuration of the existing class if it does not have any sub-classes.

If a sub class policy is specified, this command uses the Traffic-Control Class mode to apply it.

Examples

To configure a sub-class as a leaf class, use the commands:

```
awplus#configure terminal
awplus(config)#traffic-control
awplus(config-tc)#policy p01 wrr
awplus(config-tc-policy)#class c02 weight 30 sub-class-policy wrr
awplus(config-tc-class)#sub-class s02 weight 40 queue-length 200 red-curve s02-red
```

To enter Traffic-Control Class mode for an existing sub-class, use the commands:

```
awplus#configure terminal
awplus(config)#traffic-control
awplus(config-tc)#policy p01
awplus(config-tc-policy)#class c01
awplus(config-tc-class)#sub-class s01
awplus(config-tc-subclass)#
```

To delete an existing sub-class, use the commands:

```
awplus#configure terminal
awplus(config)#traffic-control
awplus(config-tc)#policy p01
awplus(config-tc-policy)#class c01
awplus(config-tc-class)#no sub-class s01
```

Related Commands

class (priority)

class (wrr)

policy (traffic-control)

traffic-control

sub-sub-class (wrr)

sub-sub-class (htb)

Overview Use this command to configure a Hierarchy Token Bucket (HTB) sub-sub-class for a sub-class.

Use the **no** variant of this command to delete an existing sub-sub-class from the current sub-class.

Syntax

```
sub-sub-class <class-name> [cir <committed-rate>] [pir
<peak-rate>] [bc <1-100000000>] [be <1-100000000>] [preference
<0-7>] [queue-length <2-65536>] [set-dscp <dscp-value>]
[red-curve <red-curve-name>]

no sub-sub-class <class-name>
```

Parameter	Description
<class-name>	Name of the sub-sub-class.
`cir` *<committed-rate>*	Set the Committed Information Rate (CIR) for the queue. Specified in kbit/mbit/gbit per second, 1kbit-100gbit. This parameter is compulsory when creating a new sub-sub-class. When editing an existing sub-sub-class, this parameter is optional.
`pir` *<peak-rate>*	Set the Peak Information Rate (PIR) for the queue. This is the rate of the queue under peak conditions. Specified in kbit/mbit/gbit per second, in the range 1kbit-100gbit.
`bc` *<1-100000000>*	Set the Committed Burst size (BC). This is the burst allowed above the CIR, sent at the PIR rate.
`be` *<1-100000000>*	Set the Excess Burst size (BE. This is the burst allowed above the PIR, sent at the maximum rate..
`preference` *<0-7>*	Set the preference for a class to receive spare bandwidth (highest is 7).
`queue-length` *<2-65536>*	Set the maximum queue length.
`set-dscp` *<dscp-value>*	Set the DSCP value to apply to the packets.
`red-curve` *<red-curve-name>*	Apply a random early discard template with the sub-sub-class and enter the name of the red curve template to apply.

Default BC and BE are assigned suitable values proportional to the CIR and PIR respectively and are larger than the MTU. PIR defaults to the CIR. Preference defaults to 7 and Queue length defaults to 1000.

Mode Traffic-Control Sub-class for an HTB sub-sub-class policy.

Usage If there is already a sub-sub-class in the same level with the specified name, this command will replace the configuration of the existing sub-sub-class.

Examples

To configure a sub-sub-class, use the commands:

```
awplus#configure terminal
awplus(config)#traffic-control
awplus(config-tc)#policy p01 htb
awplus(config-tc-policy)#class c01 cir 100mbit pir 150mbit
sub-class-policy htb
awplus(config-tc-class)#sub-class s01 cir 10mbit
```

To configure a leaf sub-sub-class with a RED curve, use the commands:

```
awplus#configure terminal
awplus(config)#traffic-control
awplus(config-tc)#policy p01 htb
awplus(config-tc-policy)#class c01 cir 100mbit pir 150mbit
sub-class-policy htb
awplus(config-tc-class)#sub-class s01 cir 10mbit
sub-sub-class-policy htb
awplus(config-tc-subclass)#sub-sub-class ss01 cir 5mbit
queue-length 200 red-curve ss01-red
```

To delete an existing sub-sub-class, use the commands:

```
awplus#configure terminal
awplus(config)#traffic-control
awplus(config-tc)#policy p01
awplus(config-tc-policy)#class c01
awplus(config-tc-class)#sub-class s01
awplus(config-tc-subclass)#no sub-sub-class ss01
```

Related Commands

policy (traffic-control)

sub-class (htb)

sub-class (priority)

traffic-control

sub-sub-class (priority)

Overview Use this command to configure a priority queue sub-sub-class for a sub-class.

Use the **no** variant of this command to delete an existing sub-sub-class from the current sub-class.

Syntax

```
sub-sub-class <class-name> [priority-level <0-15>] [max
<max-rate>] [queue-length <2-65536>] [set-dscp <dscp-value>]
[red-curve <red-curve-name>]
```

```
no sub-sub-class <class-name>
```

Parameter	Description
<class-name>	Name of the class.
priority-level *<0-15>*	Set the priority level (15 is the highest). This parameter is compulsory when creating a new sub-sub-class. When editing an existing sub-sub-class, this parameter is optional.
max *<max-rate>*	Set the maximum traffic rate of the queue (in kbit/mbit/gbit per second, 1kbit-100gbit).
queue-length *<2-65536>*	Set the maximum queue length in packets.
set-dscp *<dscp-value>*	Set the DSCP value to apply to the packets.
red-curve *<red-curve-name>*	Apply a random early discard template with the sub-sub-class and enter the name of the red curve template to apply.

Default A priority queue sub-sub-class has no max rate or DSCP value. The queue length is 1000.

Mode Traffic-Control Sub-class for a priority sub-sub-class policy.

Usage If there is already a sub-sub-class in the same level with the specified name, this command will replace the configuration of the existing sub-sub-class.

Examples To configure a sub-sub-class, use the commands:

```
awplus#configure terminal
awplus(config)#traffic-control
awplus(config-tc)#policy p01 priority
awplus(config-tc-policy)#class c01 priority-level 5
awplus(config-tc-class)#sub-class s01 priority-level 7
awplus(config-tc-subclass)#sub-sub-class ss01 priority-level 3
```

To configure a sub-sub-class with a RED curve, use the commands:

```
awplus#configure terminal
awplus(config)#traffic-control
awplus(config-tc)#policy p01 priority
awplus(config-tc-policy)#class c01 priority-level 5
sub-class-policy priority
awplus(config-tc-class)#sub-class s01 priority-level 7
sub-sub-class-policy priority
awplus(config-tc-subclass)#sub-sub-class ss01 priority-level 3
max 5mbit queue-length 200 red-curve ss01-red
```

To delete an existing sub-sub-class, use the commands:

```
awplus#configure terminal
awplus(config)#traffic-control
awplus(config-tc)#policy p01
awplus(config-tc-policy)#class c01
awplus(config-tc-class)#sub-class s01
awplus(config-tc-subclass)#no sub-sub-class ss01
```

Related Commands

traffic-control

policy (traffic-control)

sub-class (priority)

sub-sub-class (wrr)

Overview Use this command to configure a Weighted Round-Robin (WRR) sub-sub-class within a sub-class.

Use the **no** variant of this command to delete an existing sub-sub-class from the current sub-class.

Syntax

```
sub-sub-class <class-name> [weight <1-100>] [queue-length <2-65536>] [set-dscp <dscp-value>] [red-curve <red-curve-name>]
no sub-sub-class <class-name>
```

Parameter	Description
<class-name>	Name of the sub-class.
`weight` *<1-100>*	Set the weight.The relative weight is the available bandwidth divided between sibling WRR classes according to the ratio of their configured weights. This parameter is compulsory when creating a new sub-sub-class. When editing an existing sub-sub-class, this parameter is optional.
`queue-length` *<2-65536>*	Set the maximum queue length in packets.
`set-dscp` *<dscp-value>*	Set the DSCP value to apply to packets.
`red-curve` *<red-curve-name>*	Apply a random early discard template with the sub-sub-class and enter the name of the red curve template to apply.

Default A weighted round-robin sub-sub-class has no DSCP value. The queue length is 1000 by default.

Mode Traffic-Control Sub-class for a WRR sub-sub-class policy.

Usage If there is already a sub-sub-class in the same level with the specified name, this command will replace the configuration of the existing sub-sub-class.

Examples To configure a sub-sub-class as a leaf class, use the commands:

```
awplus#configure terminal
awplus(config)#traffic-control
awplus(config-tc)#policy p01 wrr
awplus(config-tc-policy)#class c01 weight 50 sub-class-policy wrr
awplus(config-tc-class)#sub-class s01 weight 30 sub-sub-class policy wrr
awplus(config-tc-subclass)#sub-sub-class ss01 weight 5 queue-length 200
```

To configure a sub-sub-class with a RED curve, use the commands:

```
awplus#configure terminal
awplus(config)#traffic-control
awplus(config-tc)#policy p01 wrr
awplus(config-tc-policy)#class c01 weight 50 sub-class-policy
wrr
awplus(config-tc-class)#sub-class s01 weight 30
sub-sub-class-policy wrr
awplus(config-tc-subclass)#sub-sub-class ss01 weight 5
queue-length 200 red-curve ss01-red
```

To delete an existing sub-sub-class, use the commands:

```
awplus#configure terminal
awplus(config)#traffic-control
awplus(config-tc)#policy p01 htb
awplus(config-tc-policy)#class c01
awplus(config-tc-class)#sub-class s01
awplus(config-tc-subclass)#no sub-sub-class ss01
```

Related Commands

traffic-control

policy (traffic-control)

sub-class (priority)

sub-class (wrr)

traffic-control enable

Overview Use this command to enable traffic control.

Use the **no** variant of this command to disable traffic control without losing your existing traffic control configuration.

Syntax

```
traffic-control enable
no traffic-control enable
```

Default Disabled

Mode Traffic-Control

Usage When traffic control is enabled and no rules are added, a default queueing discipline is applied to all interfaces that support traffic control. You can use the policy command to configure traffic control policies and the rule (traffic-control) command to apply the configured policies to the traffic.

Examples To enable traffic control, use the commands:

```
awplus#configure terminal
awplus(config)#traffic-control
awplus(config-tc)#traffic-control enable
```

To disable traffic control, use the commands:

```
awplus#configure terminal
awplus(config)#traffic-control
awplus(config-tc)#no traffic-control enable
```

Related Commands policy (traffic-control)

rule (traffic-control)

traffic-control

traffic-control

Overview Use this command to enter into Traffic-Control configuration mode.

Use the **no** variant of this command to remove all traffic control configuration.

Syntax

```
traffic-control
no traffic-control
```

Default Disabled

Mode Global Configuration

Usage This command enters you into Traffic-Control configuration mode.

In Traffic-Control Configuration mode you can:

- enable or disable traffic control
- create and delete traffic control policies
- create, move and delete rules for traffic control
- set and unset packet overhead, system bandwidth and virtual bandwidth of interfaces

Examples To configure traffic-control, use the commands:

```
awplus#configure terminal
awplus(config)#traffic-control
awplus(config-tc)#
```

To remove all traffic control configuration, us the commands:

```
awplus#configure terminal
awplus(config)#no traffic-control
awplus(config)#
```

Related Commands

class (htb)

class (priority)

class (wrr)

debug traffic-control

interface (traffic-control)

move rule (traffic-control)

policy (traffic-control)

rule (traffic-control)

traffic-control enable

show debugging traffic-control

show running-config traffic-control

show traffic-control

show traffic-control counters

show traffic-control interface

show traffic-control policy

show traffic-control rule

show traffic-control rule config-check

sub-class (htb)

sub-class (priority)

sub-class (wrr)

sub-sub-class (htb)

sub-sub-class (priority)

sub-sub-class (wrr)

39 Authentication Commands

Introduction

Overview This chapter provides an alphabetical reference for authentication commands. For more information, see the AAA and Port Authentication Feature Overview and Configuration Guide.

Command List

- "auth critical" on page 1816
- "auth host-mode" on page 1817
- "auth log" on page 1819
- "auth max-supplicant" on page 1821
- "auth profile (Global Configuration)" on page 1823
- "auth profile (Interface Configuration)" on page 1824
- "auth reauthentication" on page 1825
- "auth supplicant-ip" on page 1826
- "auth supplicant-mac" on page 1828
- "auth timeout connect-timeout" on page 1831
- "auth timeout quiet-period" on page 1832
- "auth timeout reauth-period" on page 1833
- "auth timeout server-timeout" on page 1835
- "auth-web accounting" on page 1836
- "auth-web authentication" on page 1837
- "auth-web enable" on page 1838
- "auth-web forward" on page 1840
- "auth-web idle-timeout enable" on page 1843
- "auth-web idle-timeout timeout" on page 1844

- "auth-web max-auth-fail" on page 1845
- "auth-web method" on page 1847
- "auth-web-server dhcp ipaddress" on page 1848
- "auth-web-server dhcp lease" on page 1849
- "auth-web-server dhcp-wpad-option" on page 1850
- "auth-web-server host-name" on page 1851
- "auth-web-server intercept-port" on page 1852
- "auth-web-server ipaddress" on page 1853
- "auth-web-server page language" on page 1854
- "auth-web-server login-url" on page 1855
- "auth-web-server page logo" on page 1856
- "auth-web-server page sub-title" on page 1857
- "auth-web-server page success-message" on page 1858
- "auth-web-server page title" on page 1859
- "auth-web-server page welcome-message" on page 1860
- "auth-web-server ping-poll enable" on page 1861
- "auth-web-server ping-poll failcount" on page 1862
- "auth-web-server ping-poll interval" on page 1863
- "auth-web-server ping-poll reauth-timer-refresh" on page 1864
- "auth-web-server ping-poll timeout" on page 1865
- "auth-web-server port" on page 1866
- "auth-web-server redirect-delay-time" on page 1867
- "auth-web-server redirect-url" on page 1868
- "auth-web-server session-keep" on page 1869
- "auth-web-server ssl" on page 1870
- "auth-web-server ssl intercept-port" on page 1871
- "copy proxy-autoconfig-file" on page 1872
- "copy web-auth-https-file" on page 1873
- "description (Authentication Profile)" on page 1874
- "erase proxy-autoconfig-file" on page 1875
- "erase web-auth-https-file" on page 1876
- "show auth" on page 1877
- "show auth diagnostics" on page 1878
- "show auth interface" on page 1879
- "show auth sessionstatistics" on page 1882

- "show auth statistics interface" on page 1883
- "show auth supplicant" on page 1884
- "show auth supplicant interface" on page 1887
- "show auth-web-server" on page 1888
- "show auth-web-server page" on page 1889
- "show proxy-autoconfig-file" on page 1890

auth critical

Overview This command enables the critical port feature on the interface. When the critical port feature is enabled on an interface, and all the RADIUS servers are unavailable, then the interface becomes authorized.

The **no** variant of this command disables critical port feature on the interface.

Syntax

```
auth critical
no auth critical
```

Default The critical port of port authentication is disabled.

Mode Interface Configuration for an Ethernet port, or Authentication Profile mode.

Examples To enable the critical port feature on interface `eth1`, use the following commands:

```
awplus# configure terminal
awplus(config)# interface eth1
awplus(config-if)# auth critical
```

To disable the critical port feature on interface `eth1`, use the following commands:

```
awplus# configure terminal
awplus(config)# interface eth1
awplus(config-if)# no auth critical
```

To enable the critical port feature on authentication profile ‘student’, use the commands:

```
awplus# configure terminal
awplus(config)# auth profile student
awplus(config-auth-profile)# auth critical
```

To disable the critical port feature on authentication profile ‘student’, use the commands:

```
awplus# configure terminal
awplus(config)# auth profile student
awplus(config-auth-profile)# no auth critical
```

Related Commands

auth profile (Global Configuration)

show auth-web-server

show running-config

auth host-mode

Overview This command selects the host mode on the specified interface.

Use the **no** variant of this command to set host mode to the default setting (single host).

Syntax

```
auth host-mode {single-host|multi-host|multi-supplicant}
no auth host-mode
```

Parameter	Description
`single-host`	Single host mode. In this mode, only one host may be authorized with the port. If other hosts out the interface attempt to authenticate, the authenticator blocks the attempt.
`multi-host`	Multi host mode. In this mode, multiple hosts may be authorized with the port; however only one host must be successfully authenticated at the Authentication Server for all hosts to be authorized with the port. Upon one host being successfully authenticated (state Authenticated), the other hosts will be automatically authorized at the port (state ForceAuthorized). If no host is successfully authenticated, then all hosts are not authorized with the port.
`multi-supplicant`	Multi supplicant (client device) mode. In this mode, multiple hosts may be authorized with the port, but each host must be individually authenticated with the Authentication Server to be authorized with the port. Supplicants which are not authenticated are not authorized with the port, while supplicants which are successfully authenticated are authorized with the port.

Default The default host mode for port authentication is for a single host.

Mode Interface Configuration for an Ethernet port, or Authentication Profile mode.

Usage Ports residing in the unauthorized state for host(s) or supplicant(s), change to an authorized state when the host or supplicant has successfully authenticated with the Authentication Server.

When multi-host mode is used or auth critical feature is used, all hosts do not need to be authenticated.

Examples To set the host mode to multi-supplicant on interface `eth1`, use the following commands:

```
awplus# configure terminal
awplus(config)# interface eth1
awplus(config-if)# auth host-mode multi-supplicant
```

To set the host mode to default (single host) on interface `eth1`, use the following commands:

```
awplus# configure terminal
awplus(config)# interface eth1
awplus(config-if)# no auth host-mode
```

To set the host mode to multi-supplicant on authentication profile 'student', use the commands:

```
awplus# configure terminal
awplus(config)# auth profile student
awplus(config-auth-profile)# auth host-mode multi-supplicant
```

To set the host mode to default (single host) on authentication profile 'student', use the commands:

```
awplus# configure terminal
awplus(config)# auth profile student
awplus(config-auth-profile)# no auth host-mode
```

Related Commands

auth profile (Global Configuration)

show running-config

auth log

Overview Use this command to configure the types of authentication feature log messages that are output to the log file.

Use the **no** variant of this command to remove either specified types or all types of authentication feature log messages that are output to the log file.

Syntax

```
auth log auth-web {success|failure|logoff|all}
no auth log auth-web {success|failure|logoff|all}
```

Parameter	Description
`auth-web`	Specify only Web-Authentication log messages are output to the log file.
`success`	Specify only successful authentication log messages are output to the log file.
`failure`	Specify only authentication failure log messages are output to the log file.
`logoff`	Specify only authentication log-off messages are output to the log file. Note that link down, age out and expired ping polling messages will be included.
`all`	Specify all types of authentication log messages are output to the log file Note that this is the default behavior for the authentication logging feature.

Default All types of authentication log messages are output to the log file by default.

Mode Interface Configuration for an Ethernet port, or Authentication Profile mode.

Examples To configure the logging of web authentication failures to the log file for supplicants (client devices) connected to interface `eth1`, use the following commands:

```
awplus# configure terminal
awplus(config)# interface eth1
awplus(config-if)# auth log auth-web failure
```

To configure the logging of web authentication failures to the log file for supplicants (client devices) connected to authentication profile 'student', use the commands:

```
awplus# configure terminal
awplus(config)# auth profile student
awplus(config-auth-profile)# auth log auth-web failure
```

To disable the logging of all types of authentication log messages to the log file for supplicants (client devices) connected to authentication profile 'student', use the commands:

```
awplus# configure terminal
awplus(config)# auth profile student
awplus(config-auth-profile)# no auth log all
```

Related Commands

auth profile (Global Configuration)

show running-config

auth max-supplicant

Overview This command sets the maximum number of supplicants (client devices) that can be authenticated on the selected port. Once this value is exceeded, further supplicants will not be authenticated.

The **no** variant of this command resets the maximum supplicant number to the default.

Syntax

```
auth max-supplicant <2-1024>
no auth max-supplicant
```

Parameter	Description
<2-1024>	Limit number.

Default The max supplicant of port authentication is 1024.

Mode Interface Configuration for an Ethernet port, or Authentication Profile mode.

Examples To set the maximum number of supplicants to `10` on interface `eth1`, use the following commands:

```
awplus# configure terminal
awplus(config)# interface eth1
awplus(config-if)# auth max-supplicant 10
```

To reset the maximum number of supplicant to default on interface `eth1`, use the following commands:

```
awplus# configure terminal
awplus(config)# interface eth1
awplus(config-if)# no auth max-supplicant
```

To set the maximum number of supplicants to 10 on authentication profile ‘student’, use the commands:

```
awplus# configure terminal
awplus(config)# auth profile student
awplus(config-auth-profile)# auth max-supplicant 10
```

To reset the maximum number of supplicant to default on authentication profile ‘student’, use the commands:

```
awplus# configure terminal
awplus(config)# auth profile student
awplus(config-auth-profile)# no auth max-supplicant
```

Related Commands

auth profile (Global Configuration)

show running-config

auth profile (Global Configuration)

Overview Use this command to enter port authentication profile mode and configure a port authentication profile.

If the specified profile does not exist a new authentication profile is created with the name provided.

Use the **no** variant of this command to delete the specified port authentication profile.

Syntax

```
auth profile <profile-name>
no auth profile <profile-name>
```

Parameter	Description
<varname>	Name of the profile to create or configure.

Default No port authentication profiles are created by default.

Mode Global Configuration

Usage A port authentication profile is a configuration object that aggregates multiple port authentication commands. These profiles are attached or detached from an interface using the auth profile (Interface Configuration) command.

Example To create a new authentication profile 'student', use the following commands:

```
awplus# configure terminal
awplus(config)# auth profile student
awplus(config-auth-profile)#
```

To delete an authentication profile 'student', use the following commands:

```
awplus# configure terminal
awplus(config)# no auth profile student
```

Related Commands auth profile (Interface Configuration)

description (Authentication Profile)

auth profile (Interface Configuration)

Overview Use this command to attach a port authentication profile to the current interface.

Use the **no** variant of this command to detach a port authentication profile from the current interface.

Syntax

```
auth profile <profile-name>
no auth profile <profile-name>
```

Parameter	Description
<profile-name>	The name of the profile to attach to the current interface.

Default No profile is attached by default.

Mode Interface Configuration for an Ethernet port, or Authentication Profile mode.

Usage This command attaches a authentication profile, created using the auth profile (Global Configuration) command, to an Ethernet port.

You can only attach one profile to an interface at a time, use the **no** variant of the command to detach a profile before attempting to attach another one.

Example To attach the authentication profile 'student' to eth1, use the following commands:

```
awplus# configure terminal
awplus(config)# interface eth1
awplus(config-if)# auth profile student
```

To detach the authentication profile 'student' from eth1, use the following commands:

```
awplus# configure terminal
awplus(config)# interface eth1
awplus(config-if)# no auth profile student
```

Related Commands auth profile (Global Configuration)

auth reauthentication

Overview This command enables re-authentication on the interface specified in the Interface mode.

Use the **no** variant of this command to disables reauthentication on the interface.

Syntax

```
auth reauthentication
no auth reauthentication
```

Default Reauthentication of port authentication is disabled by default.

Mode Interface Configuration for an Ethernet port, or Authentication Profile mode.

Examples To enable reauthentication on interface `eth1`, use the following commands:

```
awplus# configure terminal
awplus(config)# interface eth1
awplus(config-if)# auth reauthentication
```

To disable reauthentication on interface `eth1`, use the following commands:

```
awplus# configure terminal
awplus(config)# interface eth1
awplus(config-if)# no auth reauthentication
```

To enable reauthentication on authentication profile ‘student’, use the commands:

```
awplus# configure terminal
awplus(config)# auth profile student
awplus(config-auth-profile)# auth reauthentication
```

To disable reauthentication on authentication profile ‘student’, use the commands:

```
awplus# configure terminal
awplus(config)# auth profile student
awplus(config-auth-profile)# no auth reauthentication
```

Related Commands auth profile (Global Configuration)

show running-config

auth supplicant-ip

Overview This command adds a supplicant (client device) IP address on a given interface and provides parameters for its configuration.

Use the **no** variant of this command to delete the supplicant IP address and reset other parameters to their default values. The IP address can be determined before authentication for only auth-web client.

Syntax

```
auth supplicant-ip <ip-addr> [max-reauth-req <1-10>]
[port-control {auto|force-authorized|force-unauthorized]
[quiet-period <1-65535>] [reauth-period <1-4294967295>]
[supp-timeout <1-65535>] [server-timeout <1-65535>]
[reauthentication]

no auth supplicant-ip <ip-addr> [reauthentication]
```

Parameter	Description
<ip-addr>	IP address of the supplicant entry in A.B.C.D/P format.
`max-reauth-req`	The number of reauthentication attempts before becoming unauthorized.
<1-10>	Count of reauthentication attempts (default 2).
`port-control`	Port control commands.
`auto`	A port control parameter that allows port clients to negotiate authentication.
`force-authorized`	A port control parameter that forces the port state to authorized.
`force-unauthorized`	A port control parameter that forces the port state to unauthorized.
`quiet-period`	Quiet period during which the port remains in the HELD state (default 60 seconds).
<1-65535>	Seconds for quiet period.
`reauth-period`	Seconds between reauthorization attempts (default 3600 seconds).
<1-4294967295>	Seconds for reauthorization attempts (reauth-period).
`supp-timeout`	Supplicant response timeout.
<1-65535>	Seconds for supplicant response timeout (default 30 seconds).
`server-timeout`	The period, in seconds, before the authentication server response times out.
<1-65535>	The server-timeout period, in seconds, default 3600 seconds.
`reauthentication`	Enable reauthentication on a port.

Default No supplicant IP address for port authentication exists by default until first created with the **auth supplicant-ip** command. The defaults for parameters applied are as shown in the table above.

Mode Interface Configuration for an Ethernet port, or Authentication Profile.

Examples To add the supplicant IP address 192.168.10.0/24 to force authorized port control for interface eth1, use the commands:

```
awplus# configure terminal
awplus(config)# interface eth1
awplus(config-if)# auth supplicant-ip 192.168.10.0/24
port-control force-authorized
```

To delete the supplicant IP address 192.168.10.0/24 for interface eth1, use the commands:

```
awplus# configure terminal
awplus(config)# interface eth1
awplus(config-if)# no auth supplicant-ip 192.168.10.0/24
```

To disable reauthentication for the supplicant(s) IP address 192.168.10.0/24 for interface eth1, use the commands:

```
awplus# configure terminal
awplus(config)# interface eth1
awplus(config-if)# no auth supplicant-ip 192.168.10.0/24
reauthentication
```

To add the supplicant IP address 192.168.10.0/24 to force authorized port control for auth profile 'student', use the commands:

```
awplus# configure terminal
awplus(config)# auth profile student
awplus(config-auth-profile)# auth supplicant-ip
192.168.10.0/24 port-control force-authorized
```

To disable reauthentication for the supplicant IP address 192.168.10.0/24, for auth profile 'student', use the commands:

```
awplus# configure terminal
awplus(config)# auth profile student
awplus(config-if)# no auth supplicant-ip 192.168.10.0/24
reauthentication
```

Related Commands show running-config

auth supplicant-mac

Overview This command adds a supplicant (client device) MAC address or MAC mask on a given interface with the parameters as specified in the table below.

Use the **no** variant of this command to delete the supplicant MAC address and reset other parameters to their default values.

Syntax

```
auth supplicant-mac <mac-addr> [mask <mac-addr-mask>]
[max-reauth-req <1-10>] [port-control
{auto|force-authorized|force-unauthorized] [quiet-period
<1-65535>] [reauth-period <1-4294967295>] [supp-timeout
<1-65535>] [server-timeout <1-65535>] [reauthentication]

no auth supplicant-mac <mac-addr> [reauthentication]
```

Parameter	Description
<mac-addr>	MAC (hardware) address of the supplicant entry in HHHH.HHHH.HHHH MAC address hexadecimal format.
`mask`	A mask applied to MAC addresses in order to select only those addresses containing a specific string.
<mac-addr-mask>	The mask comprises a string of three (period separated) bytes, where each byte comprises four hexadecimal characters that will generally be either 1or 0. When the mask is applied to a specific MAC address, a match is only required for characters that correspond to a 1 in the mask. Characters that correspond to a 0 in the mask are effectively ignored. In the examples section below, the mask ffff.ff00.0000 is applied for the MAC address 0000.5E00.0000. The applied mask will then match only those MAC addresses that begin with 0000.5E (in this case the OUI component). The remaining portion of the addresses (in this case the NIC component) will be ignored.
`port-control`	Port control commands.
`auto`	Allow port client to negotiate authentication.
`force-authorized`	Force port state to authorized.
`force-unauthorized`	Force port state to unauthorized.
`quiet-period`	Quiet period in the HELD state (default 60 seconds).
<1-65535>	Seconds for quiet period.
`reauth-period`	Seconds between reauthorization attempts (default 3600 seconds).
<1-4294967295>	Seconds for reauthorization attempts (reauth-period).
`supp-timeout`	Supplicant response timeout (default 30 seconds).
<1-65535>	Seconds for supplicant response timeout.

Parameter	Description
`server-timeout`	Authentication server response timeout (default 30 seconds).
<1-65535>	Seconds for authentication server response timeout.
`reauthentication`	Enable reauthentication on a port.
`max-reauth-req`	No of reauthentication attempts before becoming unauthorized (default 2).
<1-10>	Count of reauthentication attempts.

Default No supplicant MAC address for port authentication exists by default until first created with the **auth supplicant-mac** command. The defaults for parameters are shown in the table above.

Mode Interface Configuration for an Ethernet port, or Authentication Profile mode.

Examples To add the supplicant MAC address 0000.5E00.5343 to force authorized port control for interface eth1, use the commands:

```
awplus# configure terminal
awplus(config)# interface eth1
awplus(config-if)# auth supplicant-mac 0000.5E00.5343
port-control force-authorized
```

To apply the mask ffff.ff00.0000 in order to add any supplicant MAC addresses whose MAC address begins with 0000.5E, and then to force authorized port control for interface eth1, use the commands:

```
awplus# configure terminal
awplus(config)# interface eth1
awplus(config-if)# auth supplicant-mac 0000.5E00.0000 mask
ffff.ff00.0000 port-control force-authorized
```

To delete the supplicant MAC address 0000.5E00.5343 for interface eth1, use the commands:

```
awplus# configure terminal
awplus(config)# interface eth1
awplus(config-if)# no auth supplicant-mac 0000.5E00.5343
```

To disable reauthentication for the supplicant MAC address 0000.5E00.5343 for interface eth1, use the commands:

```
awplus# configure terminal
awplus(config)# interface eth1
awplus(config-if)# no auth supplicant-mac 0000.5E00.5343
reauthentication
```

To add the supplicant MAC address 0000.5E00.5343 to force authorized port control for authentication profile 'student', use the commands:

```
awplus# configure terminal
awplus(config)# auth profile student
awplus(config-auth-profile)# auth supplicant-mac
0000.5E00.5343 port-control force-authorized
```

To delete the supplicant MAC address 0000.5E00.5343 for authentication profile 'student', use the commands:

```
awplus# configure terminal
awplus(config)# auth profile student
awplus(config-auth-profile)# no auth supplicant-mac
0000.5E00.5343
```

To disable reauthentication for the supplicant MAC address 0000.5E00.5343 for authentication profile 'student', use the commands:

```
awplus# configure terminal
awplus(config)# auth profile student
awplus(config-auth-profile)# no auth supplicant-mac
0000.5E00.5343 reauthentication
```

Related Commands

show auth

show running-config

auth timeout connect-timeout

Overview This command sets the connect-timeout period for the interface.

Use the **no** variant of this command to reset the connect-timeout period to the default.

```
auth timeout connect-timeout <1-65535>
no auth timeout connect-timeout
```

Parameter	Description
<1-65535>	Specifies the connect-timeout period (in seconds).

Mode Interface Configuration for an Ethernet port, or Authentication Profile mode.

This command is used for Web-Authentication. If the connect-timeout has lapsed and the supplicant has the state **connecting**, then the supplicant is deleted. When auth-web-server session-keep is enabled, we recommend you configure a longer connect-timeout period.

To set the connect-timeout period to 3600 seconds for interface eth1, use the following commands:

```
awplus# configure terminal
awplus(config)# interface eth1
awplus(config-if)# auth timeout connect-timeout 3600
```

To reset the connect-timeout period to the default (30 seconds) for interface eth1, use the following commands:

```
awplus# configure terminal
awplus(config)# interface eth1
awplus(config-if)# no auth timeout connect-timeout
```

To set the connect-timeout period to 3600 seconds for authentication profile 'student', use the commands:

```
awplus# configure terminal
awplus(config)# auth profile student
awplus(config-auth-profile)# auth timeout connect-timeout 3600
```

To reset the connect-timeout period to the default (30 seconds) for authentication profile 'student', use the commands:

```
awplus# configure terminal
awplus(config)# auth profile student
awplus(config-auth-profile)# no auth timeout connect-timeout
```

auth profile (Global Configuration)

auth timeout quiet-period

Overview This command sets a time period for which another authentication request is not accepted on a given interface, after an authentication request has failed.

Use the **no** variant of this command to reset the quiet period to the default.

Syntax

```
auth timeout quiet-period <1-65535>
no auth timeout quiet-period
```

Parameter	Description
<1-65535>	Specifies the quiet period (in seconds).

Default The quiet period for port authentication is 60 seconds.

Mode Interface Configuration for an Ethernet port, or Authentication Profile mode.

Examples To set the quiet period to 10 seconds for interface eth1, use the commands:

```
awplus# configure terminal
awplus(config)# interface eth1
awplus(config-if)# auth timeout quiet-period 10
```

To reset the quiet period to the default (60 seconds) for interface eth1, use the commands:

```
awplus# configure terminal
awplus(config)# interface eth1
awplus(config-if)# no auth timeout quiet-period
```

To set the quiet period to 10 seconds for authentication profile 'student', use the commands:

```
awplus# configure terminal
awplus(config)# auth profile student
awplus(config-auth-profile)# auth timeout quiet-period 10
```

To reset the quiet period to the default (60 seconds) for authentication profile 'student', use the commands:

```
awplus# configure terminal
awplus(config)# auth profile student
awplus(config-auth-profile)# no auth timeout quiet-period
```

Related Commands auth profile (Global Configuration)

auth timeout reauth-period

Overview This command sets the timer for reauthentication on a given interface. The re-authentication for the supplicant (client device) is executed at this timeout. The timeout is only applied if the **auth reauthentication** command is applied.

Use the **no** variant of this command to reset the **reauth-period** parameter to the default (3600 seconds).

Syntax

```
auth timeout reauth-period <1-4294967295>
no auth timeout reauth-period
```

Parameter	Description
<1-4294967295>	The reauthentication timeout period (in seconds).

Default The default reauthentication period for port authentication is 3600 seconds, when reauthentication is enabled on the port.

Mode Interface Configuration for an Ethernet port, or Authentication Profile mode.

Examples To set the reauthentication period to 1 day for interface `eth1`, use the following commands:

```
awplus# configure terminal
awplus(config)# interface eth1
awplus(config-if)# auth timeout reauth-period 86400
```

To reset the reauthentication period to the default (3600 seconds) for interface `eth1`, use the following commands:

```
awplus# configure terminal
awplus(config)# interface eth1
awplus(config-if)# no auth timeout reauth-period
```

To set the reauthentication period to 1 day for authentication profile ‘student’, use the commands:

```
awplus# configure terminal
awplus(config)# auth profile student
awplus(config-auth-profile)# auth timeout reauth-period 86400
```

To reset the reauthentication period to the default (3600 seconds) for authentication profile ‘student’, use the commands:

```
awplus# configure terminal
awplus(config)# auth profile student
awplus(config-auth-profile)# no auth timeout reauth-period
```

Related Commands

auth profile (Global Configuration)

auth reauthentication

show running-config

auth timeout server-timeout

Overview This command sets the timeout for the waiting response from the RADIUS server on a given interface.

The **no** variant of this command resets the server-timeout to the default (30 seconds).

Syntax

```
auth timeout server-timeout <1-65535>
no auth timeout server-timeout
```

Parameter	Description
<1-65535>	Server timeout period (in seconds).

Default The server timeout for port authentication is 30 seconds.

Mode Interface Configuration for an Ethernet port, or Authentication Profile mode.

Examples To set the server timeout to 120 seconds for interface `eth1`, use the following commands:

```
awplus# configure terminal
awplus(config)# interface eth1
awplus(config-if)# auth timeout server-timeout 120
```

To set the server timeout to the default (30 seconds) for interface `eth1`, use the following commands:

```
awplus# configure terminal
awplus(config)# interface eth1
awplus(config-if)# no auth timeout server-timeout
```

To set the server timeout to 120 seconds for authentication profile ‘student’, use the commands:

```
awplus# configure terminal
awplus(config)# auth profile student
awplus(config-auth-profile)# auth timeout server-timeout 120
```

To set the server timeout to the default (30 seconds) for authentication profile ‘student’, use the commands:

```
awplus# configure terminal
awplus(config)# auth profile student
awplus(config-auth-profile)# no auth timeout server-timeout
```

Related Commands auth profile (Global Configuration)

show running-config

auth-web accounting

Overview This command overrides the **default** RADIUS accounting method for Web-based authentication on an interface by allowing you to apply a user-defined named list.

Use the **no** variant of this command to remove the named list from the interface and apply the **default** method.

Syntax

```
auth-web accounting {default|<list-name>}
no auth-web accounting
```

Parameter	Description
default	Apply the default accounting method list
<list-name>	Apply a named accounting method list

Default The **default** method list is applied to an interface by default.

Mode Interface Mode

Example To apply the named list 'example_acct' on the eth1 interface, use the commands:

```
awplus# configure terminal
awplus(config)# interface eth1
awplus(config-if)# auth-web accounting example_acct
```

To remove the named list from the eth1 interface and set the accounting method back to **default**, use the commands:

```
awplus# configure terminal
awplus(config)# interface eth1
awplus(config-if)# no auth-web accounting
```

Related Commands aaa accounting auth-web

auth-web authentication

Overview This command overrides the **default** Web-based authentication method on an interface by allowing you to apply a user-defined named list.

Use the **no** variant of this command to remove the named list from the interface and apply the **default** method.

Syntax

```
auth-web authentication {default|<list-name>}
no auth-web authentication
```

Parameter	Description
default	Apply the default authentication method list
<list-name>	Apply the user-defined named list

Default The **default** method list is applied to an interface by default.

Mode Interface Mode

Example To apply the named list 'example_auth' on the eth1 interface, use the commands:

```
awplus# configure terminal
awplus(config)# interface eth1
awplus(config-if)# auth-web authentication example_auth
```

To remove the named list from the eth1 interface and set the authentication method back to **default**, use the commands:

```
awplus# configure terminal
awplus(config)# interface eth1
awplus(config-if)# no auth-web authentication
```

Related Commands aaa authentication auth-web

auth-web enable

Overview This command enables Web-based authentication in Interface mode on the interface specified.

Use the **no** variant of this command to apply its default.

Syntax

```
auth-web enable
no auth-web enable
```

Default Web-Authentication is disabled by default.

Mode Interface Configuration for an Ethernet port, or Authentication Profile mode.

Usage You need to configure an IPv4 address for the Ethernet interface on which Web Authentication is running.

When the **protect (firewall)** command and the **web-auth enable** command are both configured, you need to configure a firewall rule to allow Auth-web traffic to pass through the firewall. Web-auth uses TCP ports 8081, 8082, 8083 and 8084. You can create a firewall rule like the following example:

```
!
application auth-apl
protocol tcp
dport 8081 to 8084
!
!
firewall
  rule 65 permit auth-apl from private.supplicant to
private.supplicant.router
!
```

Examples To enable Web-Authentication on eth1, use the following commands:

```
awplus# configure terminal
awplus(config)# interface eth1
awplus(config-if)# auth-web enable
```

To disable Web-Authentication on eth1, use the following commands:

```
awplus# configure terminal
awplus(config)# interface eth1
awplus(config-if)# no auth-web enable
```

To enable Web authentication on authentication profile ‘student’, use the commands:

```
awplus# configure terminal
awplus(config)# auth profile student
awplus(config-auth-profile)# auth-web enable
```

To disable Web authentication on authentication profile 'student', use the commands:

```
awplus# configure terminal
awplus(config)# auth profile student
awplus(config-auth-profile)# no auth-web enable
```

Related Commands

auth profile (Global Configuration)

show auth

show auth interface

show running-config

auth-web forward

Overview This command enables the Web-authentication packet forwarding feature on the interface specified. This command also enables ARP forwarding, and adds forwarded packets to the **tcp** or **udp** port number specified.

The **no** variant of this command disables the specified packet forwarding feature on the interface.

Syntax

```
auth-web forward [<ip-address>|<ip-address/prefix-length>]
{dns|tcp <1-65535>|udp <1-65535>}
```

Or

```
auth-web forward {arp|dhcp|dns|tcp <1-65535>|udp <1-65535>}
```

The **no** variant of this command are:

```
no auth-web forward [<ip-address>|<ip-address/prefix-length>]
{dns|tcp <1-65535>|udp <1-65535>}
```

Or

```
no auth-web forward {arp|dhcp|dns|tcp <1-65535>|udp <1-65535>}
```

Parameter	Description
<ip-address> <ip-address/ prefix-length>	The IP address or subnet on which the Web-authentication is to be enabled.
`arp`	Enable forwarding of ARP.
`dhcp`	Enable forwarding of DHCP (67/udp).
`dns`	Enable forwarding of DNS (53/udp).
`tcp`	Enable forwarding of TCP specified port number.
`<1-65535>`	TCP Port number.
`udp`	Enable forwarding of UDP specified port number.
`<1-65535>`	UDP Port number.

Default Packet forwarding for port authentication is enabled by default for “arp”, “dhcp” and “dns”.

Mode Interface Configuration for an Ethernet port, or Authentication Profile mode.

Usage For more information about the *<ip-address>* parameter, and an example, see the “auth- web forward” section in the Alliedware Plus Technical Tips and Tricks.

Examples To enable the ARP forwarding feature on interface eth1, use the following commands:

```
awplus# configure terminal
awplus(config)# interface eth1
awplus(config-if)# auth-web forward arp
```

To add the TCP forwarding port 137 on interface eth1, use the following commands:

```
awplus# configure terminal
awplus(config)# interface eth1
awplus(config-if)# auth-web forward tcp 137
```

To disable the ARP forwarding feature on interface eth1, use the following commands:

```
awplus# configure terminal
awplus(config)# interface eth1
awplus(config-if)# no auth-web forward arp
```

To delete the TCP forwarding port 137 on interface eth1, use the following commands:

```
awplus# configure terminal
awplus(config)# interface eth1
awplus(config-if)# no auth-web forward tcp 137
```

To delete the all of TCP forwarding on interface eth1, use the following commands:

```
awplus# configure terminal
awplus(config)# interface eth1
awplus(config-if)# no auth-web forward tcp
```

To enable the arp forwarding feature on authentication profile ‘student’, use the commands:

```
awplus# configure terminal
awplus(config)# auth profile student
awplus(config-auth-profile)# auth-web forward arp
```

To add the tcp forwarding port 137 on authentication profile ‘student’, use the commands:

```
awplus# configure terminal
awplus(config)# auth profile student
awplus(config-auth-profile)# auth-web forward tcp 137
```

To disable the ARP forwarding feature on authentication profile ‘student’, use the commands:

```
awplus# configure terminal
awplus(config)# auth profile student
awplus(config-auth-profile)# no auth-web forward arp
```

To delete the tcp forwarding port 137 on authentication profile ‘student’, use the commands:

```
awplus# configure terminal
awplus(config)# auth profile student
awplus(config-auth-profile)# no auth-web forward tcp 137
```

To delete all tcp forwarding on authentication profile ‘student’, use the commands:

```
awplus# configure terminal
awplus(config)# auth profile student
awplus(config-auth-profile)# no auth-web forward tcp
```

Related Commands

auth profile (Global Configuration)

show auth

show auth interface

auth-web idle-timeout enable

Overview Use this command to enable the idle-timeout for client of web authentication on the interface.

The **no** variant of this command to disable the idle-timeout for client of web authentication on the interface.

Syntax

```
auth-web idle-timeout enable
no auth-web idle-timeout enable
```

Default The idle-timeout is disabled by default.

Mode Interface Mode and Auth Profile

Example To enable the idle-timeout on an interface, use the following commands:

```
awplus# configure terminal
awplus(config)# interface eth1
awplus(config)# auth-web enable
awplus(config-if)# auth-web idle-timeout enable
```

To disable the idle-timeout on an interface, use the following commands:

```
awplus# configure terminal
awplus(config)# interface eth1
awplus(config-if)# no auth-web idle-timeout enable
```

Related Commands auth-web enable

auth-web idle-timeout timeout

auth-web idle-timeout timeout

Overview Use this command to set the timeout value for web authentication client in seconds. The client will be unauthorized when it does not have any activity for a period that exceeds the timeout value.

The **no** variant of this command sets the timeout value to the default setting, 3600 seconds.

Syntax

```
auth-web idle-timeout timeout <420-86400>
no auth-web idle-timeout timeout
```

Parameter	Description
<420-86400>	Time in seconds.

Default The timeout is 3600 seconds by default.

Mode Interface Mode and Auth Profile

Example To set 30 minutes as the idle-timeout, use the following commands:

```
awplus# configure terminal
awplus(config)# interface eth1
awplus(config-if)# auth-web idle-timeout timeout 1800
```

To return the idle-timeout to the default, use the following commands:

```
awplus# configure terminal
awplus(config)# interface eth1
awplus(config-if)# no auth-web idle-timeout timeout
```

Related Commands auth-web enable

auth-web idle-timeout enable

auth-web max-auth-fail

Overview This command sets the number of authentication failures allowed before rejecting further authentication requests. When the supplicant (client device) fails more than the specified number of times, then login requests are refused during the quiet period.

The **no** variant of this command resets the maximum number of authentication failures to the default.

Syntax

```
auth-web max-auth-fail <0-10>
no auth-web max-auth-fail
```

Parameter	Description
<0-10>	The maximum number of authentication requests allowed before failing.

Default The maximum number of authentication failures is set to 3.

Mode Interface Configuration for an Ethernet port, or Authentication Profile mode.

Examples To set the lock count to `5` on interface `eth1`, use the following commands:

```
awplus# configure terminal
awplus(config)# interface eth1
awplus(config-if)# auth-web max-auth-fail 5
```

To set the lock count to the default on interface `eth1`, use the following commands:

```
awplus# configure terminal
awplus(config)# interface eth1
awplus(config-if)# no auth-web max-auth-fail
```

To set the lock count to 5 on authentication profile ‘student’, use the commands:

```
awplus# configure terminal
awplus(config)# auth profile student
awplus(config-auth-profile)# auth-web max-auth-fail 5
```

To set the lock count to the default on authentication profile ‘student’, use the commands:

```
awplus# configure terminal
awplus(config)# auth profile student
awplus(config-auth-profile)# no auth-web max-auth-fail
```

Related Commands

auth profile (Global Configuration)

auth timeout quiet-period

show auth

show auth interface

show running-config

auth-web method

Overview This command sets the Web-authentication access method that is used with RADIUS on the interface specified.

The **no** variant of this command sets the authentication method to PAP for the interface specified when Web-Authentication is also used with the RADIUS authentication method.

Syntax

```
auth-web method {eap-md5|pap}
no auth-web method
```

Parameter	Description
`eap-md5`	Enable EAP-MD5 as the authentication method.
`pap`	Enable PAP as the authentication method.

Default The Web-Authentication method is set to PAP by default.

Mode Interface Configuration for an Ethernet port, or Authentication Profile mode.

Example To set the Web-Authentication method to eap-md5 on interface `eth1`, use the following commands:

```
awplus# configure terminal
awplus(config)# interface eth1
awplus(config-if)# auth-web method eap-md5
```

To set the web authentication method to eap-md5 for authentication profile 'student', use the commands:

```
awplus# configure terminal
awplus(config)# auth profile student
awplus(config-auth-profile)# auth-web method eap-md5
```

To reset the web authentication method to the default (PAP) for authentication profile 'student', use the commands:

```
awplus# configure terminal
awplus(config)# auth profile student
awplus(config-auth-profile)# no auth-web method
```

Related Commands

auth profile (Global Configuration)

show auth

show auth interface

show running-config

auth-web-server dhcp ipaddress

Overview Use this command to assign an IP address and enable the DHCP service on the Web-Authentication server for supplicants (client devices).

Use the **no** variant of this command to remove an IP address and disable the DHCP service on the Web-Authentication server for supplicants.

Syntax

```
auth-web-server dhcp ipaddress <ip-address/prefix-length>
no auth-web-server dhcp ipaddress
```

Parameter	Description
<ip-addr/prefix-length>	The IPv4 address and prefix length assigned for the DHCP service on the Web-Authentication server for supplicants.

Default No IP address for the Web-Authentication server is set by default.

Mode Global Configuration

Usage See the AAA and Port Authentication Feature Overview and Configuration Guide for information about:

- using DHCP with web authentication, and
- restrictions regarding combinations of authentication enhancements working together

You cannot use the IPv4 address assigned to the device's interface as the Web-Authentication server address.

Examples To assign the IP address `10.0.0.1` to the Web-Authentication server, use the following commands:

```
awplus# configure terminal
awplus(config)# auth-web-server dhcp ipaddress 10.0.0.1/8
```

To remove an IP address on the Web-Authentication server, use the following commands:

```
awplus# configure terminal
awplus(config)# no auth-web-server dhcp ipaddress
```

Validation Commands show running-config

Related Commands show auth-web-server

auth-web-server dhcp lease

auth-web-server dhcp lease

Overview Use this command to set the DHCP lease time for supplicants (client devices) using the DHCP service on the Web-Authentication server.

Use the **no** variant of this command to reset to the default DHCP lease time for supplicants using the DHCP service on the Web-Authentication server.

Syntax

```
auth-web-server dhcp lease <20-60>
no auth-web-server dhcp lease
```

Parameter	Description
<20-60>	DHCP lease time for supplicants using the DHCP service on the Web-Authentication server in seconds.

Default The default DHCP lease time for supplicants using the DHCP service on the Web-Authentication server is set to 30 seconds.

Mode Global Configuration

Usage See the AAA and Port Authentication Feature Overview and Configuration Guide for information about:

- using DHCP with web authentication, and
- restrictions regarding combinations of authentication enhancements working together

Examples To set the DHCP lease time to 1 minute for supplicants using the DHCP service on the Web-Authentication server, use the following commands:

```
awplus# configure terminal
awplus(config)# auth-web-server dhcp lease 60
```

To reset the DHCP lease time to the default setting (30 seconds) for supplicants using the DHCP service on the Web-Authentication server, use the following commands:

```
awplus# configure terminal
awplus(config)# no auth-web-server dhcp lease
```

Validation Commands show running-config

Related Commands show auth-web-server

auth-web-server dhcp ipaddress

auth-web-server dhcp-wpad-option

Overview This command sets the DHCP WPAD (Web Proxy Auto-Discovery) option for the Web-Authentication temporary DHCP service.

For more information and examples, see the "Web Auth Proxy" section in the Alliedware Plus Technical Tips and Tricks.

Use the **no** variant of this command to disable the DHCP WPAD function.

Syntax

```
auth-web-server dhcp wpad-option <url>
no auth-web-server dhcp wpad-option
```

Parameter	Description
<url>	URL to the server which gets a .pac file.

Default The Web-Authentication server DHCP WPAD option is not set.

Mode Global Configuration

Usage If the supplicant is configured to use WPAD, the supplicant's web browser will use TCP port 80 as usual. Therefore, the packet can be intercepted by Web-Authentication as normal, and the Web-Authentication Login page can be sent. However, after authentication, the browser does not know where to get the WPAD file and so cannot access external web pages. The WPAD file is usually named proxy.pac file and tells the browser what web proxy to use.

Use this command to tell the supplicant where it can get this file from. The switch itself can be specified as the source for this file, and it can deliver it to the supplicant on request.

Example To specify that the proxy.pac file is found on the server at 192.168.1.100, use the following commands:

```
awplus# configure terminal
awplus(config)# auth-web-server dhcp wpad-option
http://192.168.1.100/proxy/proxy.pac
```

Related Commands show auth-web-server

auth-web-server host-name

Overview This command assigns a hostname to the web authentication server.

Use the **no** variant of this command to remove the hostname from the web authentication server.

Syntax

```
auth-web-server host-name <hostname>
no auth-web-server host-name
```

Parameter	Description
<hostname>	URL string of the hostname

Default The web authentication server has no hostname.

Mode Global Configuration

Usage When the web authentication server uses HTTPS protocol, the web browser will validate the certificate. If the certificate is invalid, the web page gives a warning message before displaying server content. However, the web page will not give warning message if the server has a hostname same as the one stored in the installed certificate.

Examples To set the auth.example.com as the hostname of the web authentication server, use the commands:

```
awplus# configure terminal
awplus(config)# auth-web-server host-name auth.example.com
```

To remove hostname auth.example.com from the web authentication server, use the commands:

```
awplus# configure terminal
awplus(config)# no auth-web-server host-name
```

Related Commands aaa authentication auth-web

auth-web enable

auth-web-server intercept-port

Overview This command specifies any additional TCP port numbers that the Web-Authentication server is to intercept.

Use the **no** variant of this command to stop intercepting the TCP port numbers.

Syntax

```
auth-web-server intercept-port {<1-65535>|any}
no auth-web-server intercept-port {<1-65535>|any}
```

Parameter	Description
<1-65535>	TCP port number.
`any`	Intercept all TCP packets

Default No additional TCP port numbers are intercepted by default.

Mode Global Configuration

Usage If this command is not specified, AlliedWare Plus Web-Authentication intercepts the supplicant's initial TCP port 80 connection to a web page and sends it the Web-Authentication Login page. However, if the supplicant is configured to use a web proxy, then it will usually be using TCP port 8080 (or another user configured port number). In this case Web-Authentication cannot intercept the connection.

To overcome this limitation you can use this command to tell the switch which additional port it should intercept, and then send the Web-Authentication Login page to the supplicant.

When the web authentication switch is in a guest network, the switch does not know the proxy server's port number in the supplicant's proxy setting. To overcome this limitation, you can use the **any** option in this command to intercept all TCP packets.

When you use this command in conjunction with a proxy server configured in the web browser, you must add the proxy server's network as a 'No Proxy' network. You can specify 'No Proxy' networks in the proxy settings in your web browser. For more information, see the "Web Auth Proxy" section in the Alliedware Plus Technical Tips and Tricks.

Example To additionally intercept port number 3128, use the following commands:

```
awplus# configure terminal
awplus(config)# auth-web-server intercept-port 3128
```

Related Commands show auth-web-server

auth-web-server ipaddress

Overview This command sets the IP address for the Web-Authentication server.

Use the **no** variant of this command to delete the IP address for the Web-Authentication server.

You cannot use the IPv4 address assigned to the device's interface as the Web-Authentication server address.

Syntax

```
auth-web-server ipaddress <ip-address>
no auth-web-server ipaddress
```

Parameter	Description
<ip-address>	Web-Authentication server dotted decimal IP address in A.B.C.D format.

Default The Web-Authentication server address on the system is not set by default.

Mode Global Configuration

Examples To set the IP address `10.0.0.1` to the Web-Authentication server, use the following commands:

```
awplus# configure terminal
awplus(config)# auth-web-server ipaddress 10.0.0.1
```

To delete the IP address from the Web-Authentication server, use the following commands:

```
awplus# configure terminal
awplus(config)# no auth-web-server ipaddress
```

Validation Commands

show auth

show auth-web-server

show running-config

auth-web-server page language

Overview Use this command to set the presentation language of Web authentication pages. Titles and subtitles of Web authentication pages will be set accordingly. Note that presently only English or Japanese are offered.

Use the **no** variant of this command to set the presentation language of Web authentication pages to its default (English).

Syntax

```
auth-web-server page language {english|japanese}
no auth-web-server page language
```

Parameter	Description
english	Web authentication pages are presented in English.
japanese	Web authentication pages are presented in Japanese.

Default Web authentication pages are presented in English by default.

Mode Global Configuration

Examples To set Japanese as the presentation language of Web authentication pages, use the following commands:

```
awplus# configure terminal
awplus(config)# auth-web-server page language japanese
```

To set English as the presentation language of Web authentication pages, use the following commands:

```
awplus# configure terminal
awplus(config)# auth-web-server page language english
```

To unset the presentation language of Web authentication pages and use English as the default presentation language, use the following commands:

```
awplus# configure terminal
awplus(config)# no auth-web-server page language
```

Related Commands

auth-web-server page title

auth-web-server page sub-title

show auth-web-server page

auth-web-server login-url

Overview This command sets the web-authentication login page URL. This lets you replace the login page with your own page. See "Customising the Login Page" in the AAA and Port Authentication Feature Overview and Configuration Guide for details.

Use the **no** variant of this command to delete the URL.

Syntax

```
auth-web-server login-url <URL>
no auth-web-server login-url
```

Parameter	Description
<URL>	Set login page URL

Default The built-in login page is set by default.

Mode Global Configuration

Examples To set http://example.com/login.html as the login page, use the commands:

```
awplus# configure terminal
awplus(config)# auth-web-server login-url
http://example.com/login.html
```

To unset the login page URL, use the commands:

```
awplus# configure terminal
awplus(config)# no auth-web-server login-url
```

Related Commands show running-config

auth-web-server page logo

Overview This command sets the type of logo that will be displayed on the web authentication page.

Use the **no** variant of this command to set the logo type to **auto**.

Note that if you need to customize the login page extensively, you can instead replace it with your own page. See "Customising the Login Page" in the AAA and Port Authentication Feature Overview and Configuration Guide.

Syntax

```
auth-web-server page logo {auto|default|hidden}
no auth-web-server page logo
```

Parameter	Description
`auto`	Display the custom logo if installed; otherwise display the default logo
`default`	Display the default logo
`hidden`	Hide the logo

Default Logo type is **auto** by default.

Mode Global Configuration

Examples To display the default logo with ignoring installed custom logo, use the commands:

```
awplus# configure terminal
awplus(config)# auth-web-server page logo default
```

To set back to the default logo type **auto**, use the commands:

```
awplus# configure terminal
awplus(config)# no auth-web-server page logo
```

Validation Commands show auth-web-server page

auth-web-server page sub-title

Overview This command sets the custom sub-title on the web authentication page.

Use the **no** variant of this command to reset the sub-title to its default.

Note that if you need to customize the login page extensively, you can instead replace it with your own page. See "Customising the Login Page" in the AAA and Port Authentication Feature Overview and Configuration Guide.

Syntax

```
auth-web-server page sub-title {hidden|text <sub-title>}
no auth-web-server page sub-title
```

Parameter	Description
`hidden`	Hide the sub-title
`<sub-title>`	Text string of the sub-title

Default "Allied-Telesis" is displayed by default.

Mode Global Configuration

Examples To set the custom sub-title, use the commands:

```
awplus# configure terminal
awplus(config)# auth-web-server page sub-title text Web
Authentication
```

To hide the sub-title, use the commands:

```
awplus# configure terminal
awplus(config)# auth-web-server page sub-title hidden
```

To change back to the default title, use the commands:

```
awplus# configure terminal
awplus(config)# no auth-web-server page sub-title
```

Validation Commands show auth-web-server page

auth-web-server page success-message

Overview This command sets the success message on the web-authentication page.

Use the **no** variant of this command to remove the success message.

Note that if you need to customize the login page extensively, you can instead replace it with your own page. See "Customising the Login Page" in the AAA and Port Authentication Feature Overview and Configuration Guide.

Syntax

```
auth-web-server page success-message text <success-message>
no auth-web-server page success-message
```

Parameter	Description
<success-message>	Text string of the success message

Default No success message is set by default.

Mode Global Configuration

Examples To set the success message on the web-authentication page, use the commands:

```
awplus# configure terminal
awplus(config)# auth-web-server page success-message text Your success message
```

To unset the success message on the web-authentication page, use the commands:

```
awplus# configure terminal
awplus(config)# no auth-web-server page success-message
```

Validation Commands show auth-web-server page

auth-web-server page title

Overview This command sets the custom title on the web authentication page.

Use the **no** variant of this command to remove the custom title.

Note that if you need to customize the login page extensively, you can instead replace it with your own page. See "Customising the Login Page" in the AAA and Port Authentication Feature Overview and Configuration Guide.

Syntax

```
auth-web-server page title {hidden|text <title>}
no auth-web-server page title
```

Parameter	Description
`hidden`	Hide the title
`<title>`	Text string of the title

Default "Web Access Authentication Gateway" is displayed by default.

Mode Global Configuration

Examples To set the custom title on the web authentication page, use the commands:

```
awplus# configure terminal
awplus(config)# auth-web-server page title text Login
```

To hide the title on the web authentication page, use the commands:

```
awplus# configure terminal
awplus(config)# auth-web-server page title hidden
```

To unset the custom title on the web authentication page, use the commands:

```
awplus# configure terminal
awplus(config)# no auth-web-server page title
```

Validation Commands show auth-web-server page

auth-web-server page welcome-message

Overview This command sets the welcome message on the web-authentication login page.

Use the **no** variant of this command to remove the welcome message.

Note that if you need to customize the login page extensively, you can instead replace it with your own page. See "Customising the Login Page" in the AAA and Port Authentication Feature Overview and Configuration Guide.

Syntax

```
auth-web-server page welcome-message text <welcome-message>
no auth-web-server page welcome-message
```

Parameter	Description
<welcome-message>	Text string of the welcome message

Default No welcome message is set by default.

Mode Global Configuration

Examples To set the welcome message on the web-authentication page, use the commands:

```
awplus# configure terminal
awplus(config)# auth-web-server page welcome-message text Your welcome message
```

To remove the welcome message on the web-authentication page, use the commands:

```
awplus# configure terminal
awplus(config)# no auth-web-server page welcome-message
```

Validation Commands show auth-web-server page

auth-web-server ping-poll enable

Overview This command enables the ping polling to the supplicant (client device) that is authenticated by Web-Authentication.

The **no** variant of this command disables the ping polling to the supplicant that is authenticated by Web-Authentication.

Syntax

```
auth-web-server ping-poll enable
no auth-web-server ping-poll enable
```

Default The ping polling feature for Web-Authentication is disabled by default.

Mode Global Configuration

Examples To enable the ping polling feature for Web-Authentication, use the following commands:

```
awplus# configure terminal
awplus(config)# auth-web-server ping-poll enable
```

To disable the ping polling feature for Web-Authentication, use the following commands:

```
awplus# configure terminal
awplus(config)# no auth-web-server ping-poll enable
```

Validation Commands show auth

show auth-web-server

show running-config

auth-web-server ping-poll failcount

Overview This command sets a fail count for the ping polling feature when used with Web-Authentication. The **failcount** parameter specifies the number of unanswered pings. A supplicant (client device) is logged off when the number of unanswered pings are greater than the failcount set with this command.

Use the **no** variant of this command to resets the fail count for the ping polling feature to the default (5 pings).

Syntax

```
auth-web-server ping-poll failcount <1-100>
no auth-web-server ping-poll failcount
```

Parameter	Description
<1-100>	Count.

Default The default failcount for ping polling is 5 pings.

Mode Global Configuration

Examples To set the failcount of ping polling to `10` pings, use the following commands:

```
awplus# configure terminal
awplus(config)# auth-web-server ping-poll failcount 10
```

To set the failcount of ping polling to default, use the following commands:

```
awplus# configure terminal
awplus(config)# no auth-web-server ping-poll failcount
```

Validation Commands show auth

show auth-web-server

show running-config

auth-web-server ping-poll interval

Overview This command is used to change the ping poll interval. The interval specifies the time period between pings when the supplicant (client device) is reachable.

Use the **no** variant of this command to reset to the default period for ping polling (30 seconds).

Syntax

```
auth-web-server ping-poll interval <1-65535>
no auth-web-server ping-poll interval
```

Parameter	Description
<1-65535>	Seconds.

Default The interval for ping polling is 30 seconds by default.

Mode Global Configuration

Examples To set the interval of ping polling to `60` seconds, use the following commands:

```
awplus# configure terminal
awplus(config)# auth-web-server ping-poll interval 60
```

To set the interval of ping polling to the default (30 seconds), use the following commands:

```
awplus# configure terminal
awplus(config)# no auth-web-server ping-poll interval
```

Validation Commands

show auth

show auth-web-server

show running-config

auth-web-server ping-poll reauth-timer-refresh

Overview This command modifies the **reauth-timer-refresh** parameter for the Web-Authentication feature. The **reauth-timer-refresh** parameter specifies whether a re-authentication timer is reset and when the response from a supplicant (a client device) is received.

Use the **no** variant of this command to reset the **reauth-timer-refresh** parameter to the default setting (disabled).

Syntax

```
auth-web-server ping-poll reauth-timer-refresh
no auth-web-server ping-poll reauth-timer-refresh
```

Default The `reauth-timer-refresh` parameter is disabled by default.

Mode Global Configuration

Examples To enable the `reauth-timer-refresh` timer, use the following commands:

```
awplus# configure terminal
awplus(config)# auth-web-server ping-poll reauth-timer-refresh
```

To disable the `reauth-timer-refresh` timer, use the following commands:

```
awplus# configure terminal
awplus(config)# no auth-web-server ping-poll
reauth-timer-refresh
```

Validation Commands

show auth

show auth-web-server

show running-config

auth-web-server ping-poll timeout

Overview This command modifies the ping poll **timeout** parameter for the Web-Authentication feature. The **timeout** parameter specifies the time in seconds to wait for a response to a ping packet.

Use the **no** variant of this command to reset the timeout of ping polling to the default (1 second).

Syntax

```
auth-web-server ping-poll timeout <1-30>
no auth-web-server ping-poll timeout
```

Parameter	Description
<1-30>	Seconds.

Default The default timeout for ping polling is 1 second.

Mode Global Configuration

Examples To set the timeout of ping polling to 2 seconds, use the command:

```
awplus# configure terminal
awplus(config)# auth-web-server ping-poll timeout 2
```

To set the timeout of ping polling to the default (1 second), use the command:

```
awplus# configure terminal
awplus(config)# no auth-web-server ping-poll timeout
```

Validation Commands show auth

show auth-web-server

show running-config

auth-web-server port

Overview This command sets the HTTP port number for the Web-Authentication server.

Use the **no** variant of this command to reset the HTTP port number to the default (80).

Syntax

```
auth-web-server port <port-number>
no auth-web-server port
```

Parameter	Description
<port-number>	Set the local Web-Authentication server port within the TCP port number range 1 to 65535.

Default The Web-Authentication server HTTP port number is set to 80 by default.

Mode Global Configuration

Examples To set the HTTP port number `8080` for the Web-Authentication server, use the following commands:

```
awplus# configure terminal
awplus(config)# auth-web-server port 8080
```

To reset to the default HTTP port number `80` for the Web-Authentication server, use the following commands:

```
awplus# configure terminal
awplus(config)# no auth-web-server port
```

Validation Commands show auth

show auth-web-server

show running-config

auth-web-server redirect-delay-time

Overview Use this command to set the delay time in seconds before redirecting the supplicant to a specified URL when the supplicant is authorized.

Use the variant **no** to reset the delay time set previously.

Syntax

```
auth-web-server redirect-delay-time <5-60>
no auth-web-server redirect-delay-time
```

Parameter	Description
`redirect-delay-time`	Set the delay time before jumping to a specified URL after the supplicant is authorized.
<5-60>	The time in seconds.

Default The default redirect delay time is `5` seconds.

Mode Global Configuration

Examples To set the delay time to `60` seconds for the Web-Authentication server, use the following commands:

```
awplus# configure terminal
awplus(config)# auth-web-server redirect-delay-time 60
```

To reset the delay time, use the following commands:

```
awplus# configure terminal
awplus(config)# no auth-web-server redirect-delay-time
```

Related Commands

auth-web-server redirect-url

show auth-web-server

show running-config

auth-web-server redirect-url

Overview This command sets a URL for supplicant (client device) authentication. When a supplicant is authorized it will be automatically redirected to the specified URL. Note that if the http redirect feature is used then this command is ignored.

Use the **no** variant of this command to delete the URL string set previously.

Syntax

```
auth-web-server redirect-url <url>
no auth-web-server redirect-url
```

Parameter	Description
<url>	URL (hostname or dotted IP notation).

Default The redirect URL for the Web-Authentication server feature is not set by default (null).

Mode Global Configuration

Examples To enable and set redirect a URL string www.alliedtelesis.com for the Web-Authentication server, use the following commands:

```
awplus# configure terminal
awplus(config)# auth-web-server redirect-url
http://www.alliedtelesis.com
```

To delete a redirect URL string, use the following commands:

```
awplus# configure terminal
awplus(config)# no auth-web-server redirect-url
```

Related Commands

auth-web-server redirect-delay-time

show auth

show auth-web-server

show running-config

auth-web-server session-keep

Overview This command enables the session-keep feature to jump to the original URL after being authorized by Web-Authentication.

Use the **no** variant of this command to disable the session keep feature.

Syntax
```
auth-web-server session-keep
no auth-web-server session-keep
```

Default The session-keep feature is disabled by default.

Mode Global Configuration

Usage This function doesn't ensure to keep session information in all cases. Authenticated supplicant may be redirected to unexpected page when session-keep is enabled. This issue occurred by supplicant sending HTTP packets automatically after authentication page is displayed and the URL is written.

Examples To enable the session-keep feature, use the following commands:

```
awplus# configure terminal
awplus(config)# auth-web-server session-keep
```

To disable the session-keep feature, use the following commands:

```
awplus# configure terminal
awplus(config)# no auth-web-server session-keep
```

Validation Commands
show auth

show auth-web-server

show running-config

auth-web-server ssl

Overview This command enables HTTPS functionality for the Web-Authentication server feature.

Use the **no** variant of this command to disable HTTPS functionality for the Web-Authentication server.

Syntax

```
auth-web-server ssl
no auth-web-server ssl
```

Default HTTPS functionality for the Web-Authentication server feature is disabled by default.

Mode Global Configuration

Examples To enable HTTPS functionality for the Web-Authentication server feature, use the following commands:

```
awplus# configure terminal
awplus(config)# auth-web-server ssl
```

To disable HTTPS functionality for the Web-Authentication server feature, use the following commands:

```
awplus# configure terminal
awplus(config)# no auth-web-server ssl
```

Validation Commands show auth

show auth-web-server

show running-config

auth-web-server ssl intercept-port

Overview Use this command to register HTTPS intercept port numbers when the HTTPS server uses custom port number (not TCP port number 443).

Note that you need to use the **auth-web-server intercept-port** command to register HTTP intercept port numbers.

Use the **no** variant of this command to delete registered port number.

Syntax

```
auth-web-server ssl intercept-port <1-65535>
no auth-web-server ssl intercept-port <1-65535>
```

Parameter	Description
<1-65535>	TCP port number in the range from 1 through 65535

Default 443/TCP is registered by default.

Mode Global Configuration

Examples To register HTTPS port number 3128, use the commands:

```
awplus# configure terminal
awplus(config)# auth-web-server ssl intercept-port 3128
```

To delete HTTPS port number 3128, use the commands:

```
awplus# configure terminal
awplus(config)# no auth-web-server ssl intercept-port 3128
```

Validation Commands show auth-web-server

Related Commands auth-web-server intercept-port

copy proxy-autoconfig-file

Overview Use this command to download the proxy auto configuration (PAC) file to your switch. The Web-Authentication supplicant can get the downloaded file from the system web server.

Syntax

```
copy <filename> proxy-autoconfig-file
```

Parameter	Description
<filename>	The URL of the PAC file.

Mode Privileged Exec

Example To download the PAC file to this device, use the command:

```
awplus# copy tftp://server/proxy.pac proxy-autoconfig-file
```

Related Commands

show proxy-autoconfig-file

erase proxy-autoconfig-file

copy web-auth-https-file

Overview Use this command to download the SSL server certificate for web-based authentication. The file must be in PEM (Privacy Enhanced Mail) format, and contain the private key and the server certificate.

Syntax

```
copy <filename> web-auth-https-file
```

Parameter	Description
<filename>	The URL of the server certificate file.

Mode Privileged Exec

Example To download the server certificate file `veriSign_cert.pem` from the TFTP server directory `server`, use the command:

```
awplus# copy tftp://server/veriSign_cert.pem
web-auth-https-file
```

Related Commands

auth-web-server ssl

erase web-auth-https-file

show auth-web-server

description (Authentication Profile)

Overview Use this command to add a description to an authentication profile in Authentication Profile mode.

Use the **no** variant of this command to remove the current description.

Syntax

```
description <description>
```

Parameter	Description
<description>	Text describing the selected authentication profile.

Default No description configured by default.

Mode Authentication Profile

Example To add a description to the authentication profile 'student', use the following commands:

```
awplus# configure terminal
awplus(config)# auth profile student
awplus(config-auth-profile)# description student room setting
```

To remove a description from the authentication profile 'student', use the following commands:

```
awplus# configure terminal
awplus(config)# auth profile student
awplus(config-auth-profile)# no description
```

Related Commands auth profile (Global Configuration)

erase proxy-autoconfig-file

Overview Use this command to remove the proxy auto configuration file.

Syntax

```
erase proxy-autoconfig-file
```

Mode Privileged Exec

Example To remove the proxy auto configuration file, use the command:

```
awplus# erase proxy-autoconfig-file
```

Related Commands

show proxy-autoconfig-file

copy proxy-autoconfig-file

erase web-auth-https-file

Overview Use this command to remove the SSL server certificate for web-based authentication.

Syntax

```
erase web-auth-https-file
```

Mode Privileged Exec

Example To remove the SSL server certificate file for web-based authentication use the command:

```
awplus# erase web-auth-https-file
```

Related Commands

auth-web-server ssl

copy web-auth-https-file

show auth-web-server

show auth

Overview This command shows the configuration state of authentication.

Syntax

```
show auth [all]
```

Parameter	Description
`all`	Display all authentication information for each authenticated interface. This can be a static channel (or static aggregator), or a dynamic (or LACP) channel group, or a switch port.

Mode Privileged Exec

Example To display all authentication information, enter the command:

```
awplus# show auth all
```

Output Figure 39-1: Example output from the **show auth** command

```
awplus# show auth all
802.1X Port-Based Authentication Enabled
MAC-based Port Authentication Disabled
WEB-based Port Authentication Enabled
 RADIUS server address (auth): 150.87.17.192:1812
   Last radius message id: 4
Authentication Info for interface eth1 portEnabled: true - portControl: Auto
 portStatus: Authorized
 reAuthenticate: disabled
 reAuthPeriod: 3600
 PAE: quietPeriod: 60 - maxReauthReq: 2 - txPeriod: 30
 BE: suppTimeout: 30 - serverTimeout: 30
 CD: adminControlledDirections: in
 KT: keyTxEnabled: false
 critical: disabled
 guestVlan: disabled
 authFailVlan: disabled
 dynamicVlanCreation: disabled
 hostMode: single-host
 dot1x: enabled
   protocolVersion: 1
 authMac: disabled
 authWeb: enabled
   method: PAP
   maxAuthFail: 3
   packetForwarding:
     10.0.0.1 80/tcp
     dns
     dhcp
```

show auth diagnostics

Overview This command shows authentication diagnostics, optionally for the specified interface, which may be an Ethernet port.

If no interface is specified then authentication diagnostics are shown for all interfaces.

Syntax `show auth diagnostics [interface <interface-list>]`

Parameter	Description
`interface`	Specify ports to show.
`<interface-list>`	The interfaces or ports to configure. An interface-list can be: • an interface (e.g. `eth1`) • a continuous range of interfaces, e.g. `eth1-2` • a comma-separated list of the above; e.g. `eth1, eth2`. The specified interfaces must exist.

Mode Privileged Exec

Example To display authentication diagnostics for `eth1`, enter the command:

```
awplus# show auth diagnostics interface eth1
```

Output Figure 39-2: Example output from the **show auth diagnostics** command

```
Authentication
Diagnostics for interface eth1
Authentication Diagnostics
for interface port1.0.6
     Supplicant address: 00d0.59ab.7037
         authEnterConnecting: 2
         authEaplogoffWhileConnecting: 1
         authEnterAuthenticating: 2
         authSuccessWhileAuthenticating: 1
         authTimeoutWhileAuthenticating: 1
         authFailWhileAuthenticating: 0
         authEapstartWhileAuthenticating: 0
         authEaplogoggWhileAuthenticating: 0
         authReauthsWhileAuthenticated: 0
         authEapstartWhileAuthenticated: 0
         authEaplogoffWhileAuthenticated: 0
         BackendResponses: 2
         BackendAccessChallenges: 1
         BackendOtherrequestToSupplicant: 3
         BackendAuthSuccess: 1
```

show auth interface

Overview This command shows the status of port authentication on the specified interface.

Use the optional **diagnostics** parameter to show authentication diagnostics for the specified interface. Use the optional **sessionstatistics** parameter to show authentication session statistics for the specified interface. Use the optional **statistics** parameter to show authentication diagnostics for the specified interface. Use the optional **supplicant** (client device) parameter to show the supplicant state for the specified interface.

Syntax

```
show auth interface <interface-list>
[diagnostics|sessionstatistics|statistics|supplicant [brief]]
```

Parameter	Description
<interface-list>	The interfaces or ports to configure. An interface-list can be: • an interface (e.g. eth1) • a continuous range of interfaces, e.g. `eth1-2` • a comma-separated list of the above; e.g. `eth1, eth2` The specified interfaces must exist.
`diagnostics`	Diagnostics.
`sessionstatistics`	Session statistics.
`statistics`	Statistics.
`supplicant`	Supplicant (client device).
`brief`	Brief summary of supplicant state.

Mode Privileged Exec

Example To display the Port based authentication status for `eth1`, enter the command:

```
awplus# show auth interface eth1
```

If port-based authentication is not configured, the output will be

```
% Port-Control not configured on eth1
```

To display the Port based authentication status for `eth1`, enter the command:

```
awplus# show auth interface eth1
```

```
awplus# show auth interface eth1
Authentication Info for interface eth1
 portEnabled: true - portControl: Auto
 portStatus: Authorized
 reAuthenticate: disabled
 reAuthPeriod: 3600
 PAE: quietPeriod: 60 - maxReauthReq: 2 - txPeriod: 30
 BE: suppTimeout: 30 - serverTimeout: 30
 CD: adminControlledDirections: in
 KT: keyTxEnabled: false
 critical: disabled
 guestVlan: disabled
 authFailVlan: disabled
 dynamicVlanCreation: disabled
 hostMode: single-host
 dot1x: enabled
   protocolVersion: 1
 authMac: disabled
 authWeb: enabled
   method: PAP
   maxAuthFail: 3
   packetForwarding:
     10.0.0.1 80/tcp
     dns
     dhcp
 twoStepAuthentication:
   configured: enabled
   actual: enabled
 supplicantMac: none
```

To display Port-Authentication diagnostics for `eth1`, enter the command:

```
awplus# show auth interface eth1 diagnostics
```

```
Authentication Diagnostics for interface eth1

Supplicant address: 00d0.59ab.7037
authEnterConnecting: 2
authEaplogoffWhileConnecting: 1
         authEnterAuthenticating: 2
         authSuccessWhileAuthenticating: 1
         authTimeoutWhileAuthenticating: 1
         authFailWhileAuthenticating: 0
         authEapstartWhileAuthenticating: 0
         authEaplogoggWhileAuthenticating: 0
         authReauthsWhileAuthenticated: 0
         authEapstartWhileAuthenticated: 0
         authEaplogoffWhileAuthenticated: 0
         BackendResponses: 2
         BackendAccessChallenges: 1
         BackendOtherrequestToSupplicant: 3
         BackendAuthSuccess: 1
```

To display Port-Authentication session statistics for `eth1`, enter the command:

```
awplus# show auth interface eth1 sessionstatistics
```

```
Authentication
session
statistics for interface eth1
     session user name: manager
         session authentication method: Remote server
         session time: 19440 secs
         session terminat cause: Not terminated yet
```

To display Port-Authentication statistics for `eth1`, enter the command:

```
awplus# show auth statistics interface eth1
```

To display the Port-Authenticated supplicant on interface `eth1`, enter the command:

```
awplus# show auth interface eth1 supplicant
```

Related Commands show auth diagnostics

show auth sessionstatistics

Overview This command shows authentication session statistics for the specified interface.

Syntax `show auth sessionstatistics [interface <interface-list>]`

Parameter	Description
`interface`	Specify ports to show.
`<interface-list>`	The interfaces or ports to configure. An interface-list can be: • an interface (e.g. `eth1`) • a continuous range of interfaces, e.g. `eth1-2` • a comma-separated list of the above; e.g. `eth1,eth2` The specified interfaces must exist.

Mode Privileged Exec

Example To display authentication statistics for `eth1`, enter the command:

```
awplus# show auth sessionstatistics interface eth1
```

Output Figure 39-3: Example output from the **show auth sessionstatistics** command

```
Authentication
session statistics for interface eth1
     session user name: manager
         session authentication method: Remote server
         session time: 19440 secs
         session terminat cause: Not terminated yet
```

show auth statistics interface

Overview This command shows the authentication statistics for the specified interface.

Syntax `show auth statistics interface <interface-list>`

Parameter	Description
<interface-list>	The interfaces or ports to configure. An interface-list can be: • an interface (e.g. `eth1`) • a continuous range of interfaces, e.g. `eth1-2` • a comma-separated list of the above; e.g. `eth1,eth2` The specified interfaces must exist.

Mode Privileged Exec

Example To display Port-Authentication statistics for `eth1`, enter the command:

```
awplus# show auth statistics interface eth1
```

show auth supplicant

Overview This command shows the supplicant (client device) state when authentication is configured for the switch. Use the optional **brief** parameter to show a summary of the supplicant state.

Syntax

```
show auth supplicant [<macadd>] [brief]
```

Parameter	Description
<macadd>	Mac (hardware) address of the supplicant. Entry format is HHHH.HHHH.HHHH (hexadecimal).
`brief`	Brief summary of the supplicant state.

Mode Privileged Exec

Examples To display a summary of authenticated supplicant information on the device, enter the command:

```
awplus# show auth supplicant brief
```

To display authenticated supplicant information on the device, enter the command:

```
awplus# show auth supplicant
```

To display authenticated supplicant information for device with MAC address `0000.5E00.5301`, enter the command:

```
awplus# show auth supplicant 0000.5E00.5301
```

Output Figure 39-4: Example output from **show auth supplicant brief**

```
awplus#show auth supplicant brief
Interface port2.0.3
  authenticationMethod: dot1x/mac/web
  Two-Step Authentication
    firstMethod: mac
    secondMethod: dot1x/web
  totalSupplicantNum: 1
  authorizedSupplicantNum: 1
    macBasedAuthenticationSupplicantNum: 0
    dot1xAuthenticationSupplicantNum: 0
    webBasedAuthenticationSupplicantNum: 1
    otherAuthenticationSupplicantNum: 0RADIUS Group Configuration

Interface   VID  Mode MAC Address    Status            IP Address      Username
=========== ==== ==== ============== ================= =============== ========
port2.0.3   1    W    001c.233e.e15a Authenticated     192.168.1.181   test
```

Figure 39-5: Example output from **show auth supplicant**

```
awplus#show auth supplicant
Interface port2.0.3
  authenticationMethod: dot1x/mac/web
  Two-Step Authentication
    firstMethod: mac
    secondMethod: dot1x/web
  totalSupplicantNum: 1
  authorizedSupplicantNum: 1
    macBasedAuthenticationSupplicantNum: 0
    dot1xAuthenticationSupplicantNum: 0
    webBasedAuthenticationSupplicantNum: 1
    otherAuthenticationSupplicantNum: 0

  Supplicant name: test
  Supplicant address: 0000.5E00.5301
    authenticationMethod: WEB-based Authentication
    Two-Step Authentication:
      firstAuthentication: Pass - Method: mac
      secondAuthentication: Pass - Method: web
    portStatus: Authorized - currentId: 1
    abort:F fail:F start:F timeout:F success:T
    PAE: state: Authenticated - portMode: Auto
    PAE: reAuthCount: 0 - rxRespId: 0
    PAE: quietPeriod: 60 - maxReauthReq: 2
    BE: state: Idle - reqCount: 0 - idFromServer: 0
    CD: adminControlledDirections: in - operControlledDirections: in
    CD: bridgeDetected: false
    KR: rxKey: false
    KT: keyAvailable: false - keyTxEnabled: false
    RADIUS server group (auth): radius
    RADIUS server (auth): 192.168.1.40
```

Figure 39-6: Example output from **show auth supplicant 0000.5E00.5301**

```
awplus#show auth supplicant 0000.5E00.5301
Interface port2.0.3
  Supplicant name: test
  Supplicant address: 0000.5E00.5301
    authenticationMethod: WEB-based Authentication
    Two-Step Authentication:
      firstAuthentication: Pass - Method: mac
      secondAuthentication: Pass - Method: web
    portStatus: Authorized - currentId: 1
    abort:F fail:F start:F timeout:F success:T
    PAE: state: Authenticated - portMode: Auto
    PAE: reAuthCount: 0 - rxRespId: 0
    PAE: quietPeriod: 60 - maxReauthReq: 2
    BE: state: Idle - reqCount: 0 - idFromServer: 0
    CD: adminControlledDirections: in - operControlledDirections: in
    CD: bridgeDetected: false
    KR: rxKey: false
    KT: keyAvailable: false - keyTxEnabled: false
    RADIUS server group (auth): radius
    RADIUS server (auth): 192.168.1.40
```

Related Commands

aaa accounting auth-web

aaa authentication auth-web

show auth supplicant interface

Overview This command shows the supplicant (client device) state for the authentication mode set for the interface. Use the optional **brief** parameter to show a summary of the supplicant state.

Syntax

```
show auth-web supplicant interface <interface-list> [brief]
```

Parameter	Description
<interface-list>	The interfaces or ports to configure. An interface-list can be: • an interface (e.g. `eth1`) • a continuous range of interfaces, e.g. `eth1-2` • a comma-separated list of the above; e.g. `eth1,eth2` The specified interfaces must exist.
`brief`	Brief summary of the supplicant state.

Mode Privileged Exec

Examples To display the authenticated supplicant on the interface `eth1`, enter the command:

```
awplus# show auth supplicant interface eth1
```

To display brief summary output for the authenticated supplicant, enter the command:

```
awplus# show auth supplicant brief
```

show auth-web-server

Overview This command shows the Web-Authentication server configuration and status on the switch.

Syntax

```
show auth-web-server
```

Mode Privileged Exec

Example To display Web-Authentication server configuration and status, enter the command:

```
awplus# show auth-web-server
```

Output Figure 39-7: Example output from the **show auth-web-server** command

```
Web authentication server
     Server status: enabled
     Server mode: none
     Server address: 192.168.1.1/24
       DHCP server enabled
       DHCP lease time: 20
       DHCP WPAD Option URL: http://192.168.1.1/proxy.pac
     HTTP Port No: 80
     Security: disabled
     Certification: default
     SSL Port No: 443
     Redirect URL: --
     Redirect Delay Time: 5
     HTTP Redirect: enabled
     Session keep: disabled
     PingPolling: disabled
     PingInterval: 30
     Timeout: 1
     FailCount: 5
     ReauthTimerReFresh: disabled
```

Related Commands

auth-web-server ipaddress

auth-web-server port

auth-web-server redirect-delay-time

auth-web-server redirect-url

auth-web-server session-keep

auth-web-server ssl

show auth-web-server page

Overview This command displays the web-authentication page configuration and status.

Syntax

```
show auth-web-server page
```

Mode Privileged Exec

Examples To show the web-authentication page information, use the command:

```
awplus# show auth-web-server page
```

Figure 39-8: Example output from the **show auth-web-server page** command

```
awplus#show auth-web-server page
Web authentication page
  Logo: auto
  Title: default
  Sub-Title: Web Authentication
  Welcome message: Your welcome message
  Success message: Your success message
```

Related Commands

auth-web forward

auth-web-server page logo

auth-web-server page sub-title

auth-web-server page success-message

auth-web-server page title

auth-web-server page welcome-message

show proxy-autoconfig-file

Overview This command displays the contents of the proxy auto configuration (PAC) file.

Syntax

```
show proxy-autoconfig-file
```

Mode Privileged Exec

Example To display the contents of the proxy auto configuration (PAC) file, enter the command:

```
awplus# show auth proxy-autoconfig-file
```

Output Figure 39-9: Example output from **show proxy-autoconfig-file**

```
function FindProxyForURL(url,host)
{
 if (isPlainHostName(host) ||
     isInNet(host, "192.168.1.0","255.255.255.0")) {
   return "DIRECT";
}
 else {
   return "PROXY 192.168.110.1:8080";
 }
}
```

Related Commands

copy proxy-autoconfig-file

erase proxy-autoconfig-file

40 AAA Commands

Introduction

Overview This chapter provides an alphabetical reference for AAA commands for Authentication, Authorization and Accounting. For more information, see the AAA and Port_Authentication Feature Overview and Configuration Guide.

Command List

- "aaa accounting auth-web" on page 1893
- "aaa accounting commands" on page 1895
- "aaa accounting login" on page 1897
- "aaa authentication auth-web" on page 1900
- "aaa authentication enable default group tacacs+" on page 1902
- "aaa authentication enable default local" on page 1904
- "aaa authentication login" on page 1905
- "aaa authentication openvpn" on page 1907
- "aaa authorization commands" on page 1908
- "aaa authorization config-commands" on page 1910
- "aaa group server" on page 1911
- "aaa local authentication attempts lockout-time" on page 1912
- "aaa local authentication attempts max-fail" on page 1913
- "aaa login fail-delay" on page 1914
- "accounting login" on page 1915
- "authorization commands" on page 1916
- "clear aaa local user lockout" on page 1918
- "debug aaa" on page 1919
- "login authentication" on page 1920

- "proxy-port" on page 1921
- "radius-secure-proxy aaa" on page 1922
- "server (radsecproxy-aaa)" on page 1923
- "server mutual-authentication" on page 1925
- "server name-check" on page 1926
- "server trustpoint" on page 1927
- "show aaa local user locked" on page 1929
- "show aaa server group" on page 1930
- "show debugging aaa" on page 1931
- "show radius server group" on page 1932
- "undebug aaa" on page 1934

aaa accounting auth-web

Overview This command configures an accounting method list for Web-based authentication. An accounting method list specifies what type of accounting messages are sent and which RADIUS servers the accounting messages are sent to. Use this command to configure either the default method list, which is automatically applied to interfaces with Web-based authentication enabled, or a named method list, which can be applied to an interface with the auth-web accounting command.

Use the **no** variant of this command to disable either the default or a named accounting method list for Web-based authentication. Once all method lists are disabled, AAA accounting for Web-based authentication is disabled globally.

Syntax

```
aaa accounting auth-web {default|<list-name>}
{start-stop|stop-only|none} group {<group-name>|radius}
no aaa accounting auth-web {default|<list-name>}
```

Parameter	Description
`default`	Configure the default accounting method list
`<list-name>`	Configure a named accounting method list
`start-stop`	Sends a start accounting message at the beginning of the session and a stop accounting message at the end of the session.
`stop-only`	Only sends a stop accounting message at the end of the session.
`none`	No accounting record sent.
`group`	Use a server group
`<group-name>`	Server group name.
`radius`	Use all RADIUS servers.

Default RADIUS accounting for Web-based authentication is disabled by default.

Mode Global Configuration

Usage This command can be used to configure either the default accounting method list or a named accounting method list:

- **default**: the default accounting method list which is automatically applied to all interfaces with Web-based authentication enabled.
- *<list-name>*: a user named list which can be applied to an interface using the auth-web accounting command.

There are two ways to define servers where RADIUS accounting messages are sent:

- **group radius**: use all RADIUS servers configured by radius-server host command

- **group** <*group-name*>: use the specified RADIUS server group configured with the aaa group server command

Configure the accounting event to be sent to the RADIUS server with the following options:

- **start-stop**: sends a start accounting message at the beginning of a session and a stop accounting message at the end of the session.
- **stop-only**: sends a stop accounting message at the end of a session.
- **none**: disables accounting.

Examples To enable the default RADIUS accounting method for Web-based authentication, and use all available RADIUS servers, use the commands:

```
awplus# configure terminal
awplus(config)# aaa accounting auth-web default start-stop
group radius
```

To disable the default RADIUS accounting method for Web-based authentication, use the commands:

```
awplus# configure terminal
awplus(config)# no aaa accounting auth-web default
```

To enable a named RADIUS accounting method list 'example_acct' for Web-based authentication, with the RADIUS server group 'rad_group_example, use the commands:

```
awplus# configure terminal
awplus(config)# aaa accounting auth-web example_acct start-stop
group rad_group_example
```

To disable a named RADIUS accounting method list 'example_acct' for Web-based authentication, use the commands:

```
awplus# configure terminal
awplus(config)# no aaa accounting auth-web example_acct
```

Related Commands

aaa authentication auth-web

aaa group server

auth-web accounting

auth-web enable

radius-server host

show aaa server group

aaa accounting commands

Overview This command configures and enables TACACS+ accounting on commands entered at a specified privilege level. Once enabled for a privilege level, accounting messages for commands entered at that privilege level will be sent to a TACACS+ server.

In order to account for all commands entered on a device, configure command accounting for each privilege level separately.

The command accounting message includes, the command as entered, the date and time the command finished executing, and the user-name of the user who executed the command.

Use the **no** variant of this command to disable command accounting for a specified privilege level.

Syntax

```
aaa accounting commands <1-15> default stop-only group tacacs+
no aaa accounting commands <1-15> default
```

Parameter	Description
<1-15>	The privilege level being configured, in the range 1 to 15.
`default`	Use the default method list, this means the command is applied globally to all user exec sessions.
`stop-only`	Send accounting message when the commands have stopped executing.
`group`	Specify the server group where accounting messages are sent. Only the tacacs+ group is available for this command.
`tacacs+`	Use all TACACS+ servers configured by the tacacs-server host command.

Default TACACS+ command accounting is disabled by default.

Mode Global Configuration

Usage This command only supports a **default** method list, this means that it is applied to every console and VTY line.

The **stop-only** parameter indicates that the command accounting messages are sent to the TACACS+ server when the commands have stopped executing.

The **group tacacs+** parameters signifies that the command accounting messages are sent to the TACACS+ servers configured by the tacacs-server host command.

Note that up to four TACACS+ servers can be configured for accounting. The servers are checked for reachability in the order they are configured with only the first reachable server being used. If no server is found, the accounting message is dropped.

Command accounting cannot coexist with triggers. An error message is displayed if you attempt to enable command accounting while a trigger is configured. Likewise, an error message is displayed if you attempt to configure a trigger while command accounting is configured.

Examples

To configure command accounting for privilege levels 1, 7, and 15, use the following commands:

```
awplus# configure terminal
awplus(config)# aaa accounting commands 1 default stop-only
group tacacs+
awplus(config)# aaa accounting commands 7 default stop-only
group tacacs+
awplus(config)# aaa accounting commands 15 default stop-only
group tacacs+
```

To disable command accounting for privilege levels 1, 7, and 15, use the following commands:

```
awplus# configure terminal
awplus(config)# no aaa accounting commands 1 default
awplus(config)# no aaa accounting commands 7 default
awplus(config)# no aaa accounting commands 15 default
```

Related Commands

aaa authentication login

aaa accounting login

accounting login

tacacs-server host

aaa accounting login

Overview This command configures RADIUS and TACACS+ accounting for login shell sessions. The specified method list name can be used by the **accounting login** command in the Line Configuration mode. If the **default** parameter is specified, then this creates a default method list that is applied to every console and VTY line, unless another accounting method list is applied on that line.

Note that unlimited RADIUS servers and up to four TACACS+ servers can be configured and consulted for accounting. The first server configured is regarded as the primary server and if the primary server fails then the backup servers are consulted in turn. A backup server is consulted if the primary server fails, i.e. is unreachable.

Use the **no** variant of this command to remove an accounting method list for login shell sessions configured by an **aaa accounting login** command. If the method list being deleted is already applied to a console or VTY line, accounting on that line will be disabled. If the default method list name is removed by this command, it will disable accounting on every line that has the default accounting configuration.

Syntax

```
aaa accounting login
{default|<list-name>}{start-stop|stop-only|none} {group
{radius|tacacs+|<group-name>}}
```

```
no aaa accounting login {default|<list-name>}
```

Parameter	Description
`default`	Default accounting method list.
`<list-name>`	Named accounting method list.
`start-stop`	Start and stop records to be sent.
`stop-only`	Stop records to be sent.
`none`	No accounting record to be sent.
`group`	Specify the servers or server group where accounting packets are sent.
`radius`	Use all RADIUS servers configured by the radius-server host command.
`tacacs+`	Use all TACACS+ servers configured by the tacacs-server host command.
`<group-name>`	Use the specified RADIUS server group, as configured by the aaa group server command.

Default Accounting for login shell sessions is disabled by default.

Mode Global Configuration

Usage This command enables you to define a named accounting method list. The items that you define in the accounting options are:

- the types of accounting packets that will be sent
- the set of servers to which the accounting packets will be sent

You can define a default method list with the name **default** and any number of other named method lists. The name of any method list that you define can then be used as the *<list-name>* parameter in the accounting login command.

If the method list name already exists, the command will replace the existing configuration with the new one.

There are two ways to define servers where RADIUS accounting messages are sent:

- **group radius** : use all RADIUS servers configured by radius-server host command
- **group** *<group-name>* : use the specified RADIUS server group configured with the aaa group server command

There is one way to define servers where TACACS+ accounting messages are sent:

- **group tacacs+** : use all TACACS+ servers configured by tacacs-server host command

The accounting event to send to the RADIUS or TACACS+ server is configured with the following options:

- **start-stop** : sends a **start** accounting message at the beginning of a session and a **stop** accounting message at the end of the session.
- **stop-only** : sends a **stop** accounting message at the end of a session.
- **none** : disables accounting.

Examples To configure RADIUS accounting for login shell sessions, use the following commands:

```
awplus# configure terminal
awplus(config)# aaa accounting login default start-stop group radius
```

To configure TACACS+ accounting for login shell sessions, use the following commands:

```
awplus# configure terminal
awplus(config)# aaa accounting login default start-stop group tacacs+
```

To reset the configuration of the default accounting list, use the following commands:

```
awplus# configure terminal
awplus(config)#  no aaa accounting login default
```

Related Commands

aaa accounting commands

aaa authentication login

aaa accounting login

accounting login

radius-server host

tacacs-server host

aaa authentication auth-web

Overview This command enables Web-based authentication globally and allows you to enable either the default authentication method list (in this case, a list of RADIUS servers), which is automatically applied to every interface running Web-based authentication, or a user named authentication method list, which is applied to an interface with the auth-web authentication command.

Use the **no** variant of this command to disable either the default or a named method list for Web-based authentication. Once all method lists are disabled Web-based authentication is disabled globally.

Syntax

```
aaa authentication auth-web {default|<list-name>} group
{<group-name>|radius}
```

```
no aaa authentication auth-web {default|<list-name>}
```

Parameter	Description
`default`	Configure the default authentication method list
`<list-name>`	Configure a named authentication method list
`group`	Use a server group
`<group-name>`	Server group name.
`radius`	Use all RADIUS servers.

Default Web-based authentication is disabled by default.

Mode Global Configuration

Usage This command can be used to configure either the default authentication method list or a named authentication method list:

- **default**: the default authentication method list which is automatically applied to all interfaces with Web-based authentication enabled.
- **<***list-name***>**: a user named list which can be applied to an interface using the auth-web authentication command.

There are two ways to define servers where RADIUS accounting messages are sent:

- **group radius**: use all RADIUS servers configured by radius-server host command
- **group <***group-name***>**: use the specified RADIUS server group configured with the aaa group server command

Note that you need to configure an IPv4 address for the VLAN interface on which Web authentication is running.

Examples

To enable Web-based authentication globally for all RADIUS servers, and use all available RADIUS servers, use the commands:

```
awplus# configure terminal
awplus(config)# aaa authentication auth-web default group radius
```

To disable Web-based authentication, use the commands:

```
awplus# configure terminal
awplus(config)# no aaa authentication auth-web default
```

To enable Web-based authentication for named list 'example_auth', with RADIUS server group 'rad_group_example, use the commands:

```
awplus# configure terminal
awplus(config)# aaa authentication auth-web example_auth group rad_group_example
```

To disable Web-based authentication for named list 'example_auth', use the commands:

```
awplus# configure terminal
awplus(config)# no aaa authentication example_auth
```

Related Commands

aaa accounting auth-web

aaa group server

auth-web authentication

radius-server host

aaa authentication enable default group tacacs+

Overview This command enables AAA authentication to determine the privilege level a user can access for passwords authenticated against the TACACS+ server.

Use the **no** variant of this command to disable privilege level authentication.

Syntax

```
aaa authentication enable default group tacacs+ [local] [none]
no aaa authentication enable default
```

Parameter	Description
`local`	Use the locally configured enable password (**enable password** command) for authentication.
`none`	No authentication.

Default Local privilege level authentication is enabled by default (aaa authentication enable default local command).

Mode Global Configuration

Usage A user is configured on a TACACS+ server with a maximum privilege level. When they enter the enable (Privileged Exec mode) command they are prompted for an enable password which is authenticated against the TACACS+ server. If the password is correct and the specified privilege level is equal to or less than the users maximum privilege level, then they are granted access to that level. If the user attempts to access a privilege level that is higher than their maximum configured privilege level, then the authentication session will fail and they will remain at their current privilege level.

NOTE: *If both **local** and **none** are specified, you must always specify **local** first.*

If the TACACS+ server goes offline, or is not reachable during enable password authentication, and command level authentication is configured as:

- **aaa authentication enable default group tacacs+**

  then the user is never granted access to Privileged Exec mode.

- **aaa authentication enable default group tacacs+ local**

  then the user is authenticated using the locally configured enable password, which if entered correctly grants the user access to Privileged Exec mode. If no enable password is locally configured (**enable password** command), then the enable authentication will fail until the TACACS+ server becomes available again.

- **aaa authentication enable default group tacacs+ none**

  then the user is granted access to Privileged Exec mode with no authentication. This is true even if a locally configured enable password is configured.

- **aaa authentication enable default group tacacs+ local none**

  then the user is authenticated using the locally configured enable password. If no enable password is locally configured, then the enable authentication will grant access to Privileged Exec mode with no authentication.

If the password for the user is not successfully authenticated by the server, then the user is again prompted for an enable password when they enter **enable** via the CLI.

Examples

To enable a privilege level authentication method that will not allow the user to access Privileged Exec mode if the TACACS+ server goes offline, or is not reachable during enable password authentication, use the following commands:

```
awplus# configure terminal
awplus(config)# aaa authentication enable default group tacacs+
```

To enable a privilege level authentication method that will allow the user to access Privileged Exec mode if the TACACS+ server goes offline, or is not reachable during enable password authentication, and a locally configured enable password is configured, use the following commands:

```
awplus# configure terminal
awplus(config)# aaa authentication enable default group tacacs+
local
```

To disable privilege level authentication, use the following commands:

```
awplus# configure terminal
awplus(config)# no aaa authentication enable default
```

Related Commands

aaa authentication login

aaa authentication enable default local

enable (Privileged Exec mode)

enable password

enable secret

tacacs-server host

aaa authentication enable default local

Overview This command enables AAA authentication to determine the privilege level a user can access for passwords authenticated locally.

Syntax
```
aaa authentication enable default local
```

Default Local privilege level authentication is enabled by default.

Mode Global Configuration

Usage The privilege level configured for a particular user in the local user database is the privilege threshold above which the user is prompted for an enable (Privileged Exec mode) command.

Examples To enable local privilege level authentication command, use the following commands:

```
awplus# configure terminal
awplus(config)# aaa authentication enable default local
```

To disable privilege level authentication, use the following commands:

```
awplus# configure terminal
awplus(config)# no aaa authentication enable default
```

Related Commands
aaa authentication enable default group tacacs+

aaa authentication login

enable (Privileged Exec mode)

enable password

enable secret

tacacs-server host

aaa authentication login

Overview Use this command to create an ordered list of methods to use to authenticate user login, or to replace an existing method list with the same name. Specify one or more of the options **local** or **group**, in the order you want them to be applied. If the **default** method list name is specified, it is applied to every console and VTY line immediately unless another method list is applied to that line by the login authentication command. To apply a non-default method list, you must also use the login authentication command.

Use the **no** variant of this command to remove an authentication method list for user login. The specified method list name is deleted from the configuration. If the method list name has been applied to any console or VTY line, user login authentication on that line will fail.

Note that the **no aaa authentication login default** command does not remove the default method list. This will return the default method list to its default state (**local** is the default).

Syntax

```
aaa authentication login {default|<list-name>} {[local] [group
{radius|tacacs+|<group-name>}]}
```

```
no aaa authentication login {default|<list-name>}
```

Parameter	Description
`default`	Set the default authentication server for user login.
`<list-name>`	Name of authentication server.
`local`	Use the local username database.
`group`	Use server group.
`radius`	Use all RADIUS servers configured by the radius-server host command.
`tacacs+`	Use all TACACS+ servers configured by the tacacs-server host command.
`<group-name>`	Use the specified RADIUS server group, as configured by the aaa group server command.

Default If the default server is not configured using this command, user login authentication uses the local user database only.

If the **default** method list name is specified, it is applied to every console and VTY line immediately unless a named method list server is applied to that line by the **loginauthentication** command.

local is the default state for the default method list unless a named method list is applied to that line by the **login authentication** command. Reset to the default method list using the **no aaa authentication login default** command.

Mode Global Configuration

Usage

When a user attempts to log in, the switch sends an authentication request to the first authentication server in the method list. If the first server in the list is reachable and it contains a username and password matching the authentication request, the user is authenticated and the login succeeds. If the authentication server denies the authentication request because of an incorrect username or password, the user login fails. If the first server in the method list is unreachable, the switch sends the request to the next server in the list, and so on.

For example, if the method list specifies **group tacacs+ local**, and a user attempts to log in with a password that does not match a user entry in the first TACACS+ server, if this TACACS+ server denies the authentication request, then the switch does not try any other TACACS+ servers not the local user database; the user login fails.

Examples

To configure the default authentication method list for user login to first use all available RADIUS servers for user login authentication, and then use the local user database, use the following commands:

```
awplus# configure terminal
awplus(config)# aaa authentication login default group radius local
```

To configure a user login authentication method list called **USERS** to first use the RADIUS server group `RAD_GROUP1` for user login authentication, and then use the local user database, use the following commands:

```
awplus# configure terminal
awplus(config)# aaa authentication login USERS group RAD_GROUP1 local
```

To configure a user login authentication method list called USERS to first use the TACACS+ servers for user login authentication, and then use the local user database, use the following commands:

```
awplus# configure terminal
awplus(config)# aaa authentication login USERS group tacacs+ local
```

To return to the default method list (**local** is the default server), use the following commands:

```
awplus# configure terminal
awplus(config)# no aaa authentication login default
```

To delete an existing authentication method list USERS created for user login authentication, use the following commands:

```
awplus# configure terminal
awplus(config)# no aaa authentication login USERS
```

Related Commands

aaa accounting commands

aaa authentication enable default group tacacs+

login authentication

aaa authentication openvpn

Overview This command enables RADIUS authentication of OpenVPN tunnels globally. It is automatically applied to every OpenVPN tunnel interface.

Use the **no** variant of this command to globally disable RADIUS authentication of OpenVPN tunnels.

Syntax

```
aaa authentication openvpn default group {<group-name>|radius}
no aaa authentication openvpn default
```

Parameter	Description
`radius`	Use all RADIUS servers.
`<group-name>`	Server group name.

Default RADIUS authentication of OpenVPN tunnels is disabled by default.

Mode Global Configuration

Usage Use the **no** variant of this command to reset the default authentication method for OpenVPN tunnels, to its default, that is, to use the group **radius**, containing all RADIUS servers configured by the **radius-server host** command.

Note that if the default authentication method is used, all OpenVPN tunnels will use the group **radius**, containing all RADIUS servers.

There are two ways to define servers where RADIUS accounting messages are sent:

- **group radius** : use all RADIUS servers configured by radius-server host command
- **group** <*group-name*> : use the specified RADIUS server group configured with the aaa group server command

Examples To enable RADIUS authentication of OpenVPN tunnels globally and use all available RADIUS servers, use the commands:

```
awplus# configure terminal
awplus(config)# aaa authentication openvpn default group radius
```

To disable RADIUS authentication of OpenVPN tunnels, use the commands:

```
awplus# configure terminal
awplus(config)# no aaa authentication openvpn default
```

Related Commands aaa group server

radius-server host

aaa authorization commands

Overview This command configures a method list for commands authorization that can be applied to console or VTY lines. When command authorization is enabled for a privilege level, only authorized users can executed commands in that privilege level.

Use the **no** variant of this command to remove a named method list or disable the default method list for a privilege level.

Syntax

```
aaa authorization commands <privilege-level>
{default|<list-name>} group tacac+ [none]
```

```
no aaa authorization commands <privilege-level>
{default|<list-name>}
```

Parameter	Description
<privilege-level>	The privilege level of the set of commands the method list will be applied to. AlliedWare Plus defines three sets of commands, that are indexed by a level value: **Level = 1**: All commands that can be accessed by a user with privilege level between 1 and 6 inclusive **Level = 7:** All commands that can be accessed by a user with privilege level between 7 and 14 inclusive **Level = 15**: All commands that can be accessed by a user with privilege level 15
`group`	Specify the server group where authorization messages are sent. Only the `tacacs+` group is available for this command.
`tacac+`	Use all TACACS+ servers configured by the tacacs-server host command.
`default`	Configure the default authorization commands method list.
<list-name>	Configure a named authorization commands method list
`none`	If specified, this provides a local fallback to command authorization so that if authorization servers become unavailable then the device will accept all commands normally allowed for the privilege level of the user.

Mode Global Configuration

Usage TACACS+ command authorization provides centralized control of the commands available to a user of an AlliedWare Plus device. Once enabled:

- The command string and username are encrypted and sent to the first available configured TACACS+ server (the first server configured) for authorization.

- The TACACS+ server decides if the user is authorized to execute the command and returns the decision to the AlliedWare Plus device.
- Depending on this decision the device will then either execute the command or notify the user that authorization has failed.

If multiple TACACS+ servers are configured, and the first server is unreachable or does not respond, the other servers will be queried, in turn, for an authorization decision. If all servers are unreachable and a local fallback has been configured, with the **none** parameter, then commands are authorized based on the user's privilege level; the same behavior as if command authorization had not been configured. If, however, the local fallback is not configured and all servers become unreachable then all commands except **logout**, **exit**, and **quit** will be denied.

The **default** method list is defined with a local fallback unless configured differently using this command.

Example To configure a commands authorization method list, named TAC15, using all TACACS+ servers to authorize commands for privilege level 15, with a local fallback, use the following commands:

```
awplus# configure terminal
awplus(config)# aaa authorization commands 15 TAC15 group tacacs+ none
```

To configure the default method list to authorize commands for privilege level 7, with no local fallback, use the following commands:

```
awplus# configure terminal
awplus(config)# aaa authorization commands 7 default group tacacs+
```

To remove the authorization method list TAC15, use the following commands:

```
awplus# configure terminal
awplus(config)# no aaa authorization commands 15 TAC15
```

Related Commands

aaa authorization config-commands

authorization commands

tacacs-server host

Command changes Version 5.4.6-2.1: command added

aaa authorization config-commands

Overview Use this command to enable command authorization on configuration mode commands. By default, command authorization applies to commands in exec mode only.

Use the **no** variant of this command to disable command authorization on configuration mode commands.

Syntax

```
aaa authorization config-commands
no aaa authorization config-commands
```

Default By default, command authorization is disabled on configuration mode commands.

Mode Global Configuration

Usage If authorization of configuration mode commands is not enabled then all configuration commands are accepted by default, including command authorization commands.

NOTE: *Authorization of configuration commands is required for a secure TACACS+ command authorization configuration as it prevents the feature from being disabled to gain access to unauthorized exec mode commands.*

Example To enable command authorization for configuration mode commands, use the commands:

```
awplus# configure terminal
awplus(config)# aaa authorization config-commands
```

To disable command authorization for configuration mode commands, use the commands:

```
awplus# configure terminal
awplus(config)# no aaa authorization config-commands
```

Related Commands aaa authorization commands

authorization commands

tacacs-server host

Command changes Version 5.4.6-2.1: command added

aaa group server

Overview This command configures a RADIUS server group. A server group can be used to specify a subset of RADIUS servers in **aaa** commands. The group name **radius** is predefined, which includes all RADIUS servers configured by the **radius-server host** command.

RADIUS servers are added to a server group using the **server** command. Each RADIUS server should be configured using the **radius-server host** command.

Use the **no** variant of this command to remove an existing RADIUS server group.

Syntax

```
aaa group server radius <group-name>
no aaa group server radius <group-name>
```

Parameter	Description
<group-name>	Server group name.

Mode Global Configuration

Usage Use this command to create an AAA group of RADIUS servers, and to enter Server Group Configuration mode, in which you can add servers to the group. Use a server group to specify a subset of RADIUS servers in AAA commands. Each RADIUS server must be configured by the **radius-server host** command. To add RADIUS servers to a server group, use the **server** command.

Examples To create a RADIUS server group named `GROUP1` with hosts `192.168.1.1`, `192.168.2.1` and `192.168.3.1`, use the commands:

```
awplus(config)# aaa group server radius GROUP1
awplus(config-sg)# server 192.168.1.1 auth-port 1812 acct-port 1813
awplus(config-sg)# server 192.168.2.1 auth-port 1812 acct-port 1813
awplus(config-sg)# server 192.168.3.1 auth-port 1812 acct-port 1813
```

To remove a RADIUS server group named `GROUP1` from the configuration, use the command:

```
awplus(config)# no aaa group server radius GROUP1
```

Related Commands

aaa accounting login

aaa authentication login

radius-server host

server (Server Group)

show radius server group

aaa local authentication attempts lockout-time

Overview This command configures the duration of the user lockout period.

Use the **no** variant of this command to restore the duration of the user lockout period to its default of 300 seconds (5 minutes).

Syntax

```
aaa local authentication attempts lockout-time <lockout-tiime>
no aaa local authentication attempts lockout-time
```

Parameter	Description
<lockout-time>	<0-10000>. Time in seconds to lockout the user.

Mode Global Configuration

Default The default for the lockout-time is 300 seconds (5 minutes).

Usage While locked out all attempts to login with the locked account will fail. The lockout can be manually cleared by another privileged account using the clear aaa local user lockout command.

Examples To configure the lockout period to 10 minutes (600 seconds), use the commands:

```
awplus# configure terminal
awplus(config)# aaa local authentication attempts lockout-time
600
```

To restore the default lockout period of 5 minutes (300 seconds), use the commands:

```
awplus# configure terminal
awplus(config)# no aaa local authentication attempts
lockout-time
```

Related Commands aaa local authentication attempts max-fail

aaa local authentication attempts max-fail

Overview This command configures the maximum number of failed login attempts before a user account is locked out. Every time a login attempt fails the failed login counter is incremented.

Use the **no** variant of this command to restore the maximum number of failed login attempts to the default setting (five failed login attempts).

Syntax

```
aaa local authentication attempts max-fail <failed-logins>
no aaa local authentication attempts max-fail
```

Parameter	Description
<failed-logins>	<1-32>. Number of login failures allowed before locking out a user.

Mode Global Configuration

Default The default for the maximum number of failed login attempts is five failed login attempts.

Usage When the failed login counter reaches the limit configured by this command that user account is locked out for a specified duration configured by the aaa local authentication attempts lockout-time command.

When a successful login occurs the failed login counter is reset to 0. When a user account is locked out all attempts to login using that user account will fail.

Examples To configure the number of login failures that will lock out a user account to two login attempts, use the commands:

```
awplus# configure terminal
awplus(config)# aaa local authentication attempts max-fail 2
```

To restore the number of login failures that will lock out a user account to the default number of login attempts (five login attempts), use the commands:

```
awplus# configure terminal
awplus(config)# no aaa local authentication attempts max-fail
```

Related Commands aaa local authentication attempts lockout-time

clear aaa local user lockout

aaa login fail-delay

Overview Use this command to configure the minimum time period between failed login attempts. This setting applies to login attempts via the console, SSH and Telnet.

Use the **no** variant of this command to reset the minimum time period to its default value.

Syntax

```
aaa login fail-delay [<1-10>]
no aaa login fail-delay [<1-10>]
```

Parameter	Description
<1-10>	The minimum number of seconds required between login attempts

Default 1 second

Mode Global configuration

Example To apply a delay of at least 5 seconds between login attempts, use the following commands:

```
awplus# configure terminal
awplus(config)# aaa login fail-delay 5
```

Related Commands aaa authentication login

accounting login

Overview This command applies a login accounting method list to console or VTY lines for user login. When login accounting is enabled using this command, logging events generate an accounting record to the accounting server.

The accounting method list must be configured first using this command. If an accounting method list is specified that has not been created by this command then accounting will be disabled on the specified lines.

The **no** variant of this command resets AAA Accounting applied to console or VTY lines for local or remote login. **default** login accounting is applied after issuing the **no accounting login** command. Accounting is disabled with **default**.

Syntax

```
accounting login {default|<list-name>}
no accounting login
```

Parameter	Description
`default`	Default accounting method list.
<list-name>	Named accounting method list.

Default By default login accounting is disabled in the **default** accounting server. No accounting will be performed until accounting is enabled using this command.

Mode Line Configuration

Examples To apply the accounting server `USERS` to all VTY lines, use the following commands:

```
awplus# configure terminal
awplus(config)# line vty 0 32
awplus(config-line)# accounting login USERS
```

To reset accounting for login sessions on the console, use the following commands:

```
awplus# configure terminal
awplus(config)# line console 0
awplus(config-line)# no accounting login
```

Related Commands aaa accounting commands

aaa accounting login

authorization commands

Overview This command applies a command authorization method list, defined using the aaa authorization commands command, to console and VTY lines.

Use the **no** variant of this command to reset the command authorization configuration on the console and VTY lines.

Syntax

```
authorization commands <privilege-level> {default|<list-name>}
no authorization commands <privilege-level>
```

Parameter	Description
<privilege-level>	The privilege level of the set of commands the method list will be applied to. AlliedWare Plus defines three sets of commands, that are indexed by a level value: **Level = 1**: All commands that can be accessed by a user with privilege level between 1 and 6 inclusive **Level = 7:** All commands that can be accessed by a user with privilege level between 7 and 14 inclusive **Level = 15**: All commands that can be accessed by a user with privilege level 15
`default`	Configure the default authorization commands method list.
<list-name>	Configure a named authorization commands method list

Default The **default** method list is applied to each console and VTY line by default.

Mode Line Configuration

Usage If the specified method list does not exist users will not be enable to execute any commands in the specified method list on the specified VTY lines.

Example To apply the TAC15 command authorization method list with privilege level 15 to VTY lines 0 to 5, use the following commands:

```
awplus# configure terminal
awplus(config)# line vty 0 5
awplus(config-line)# authorization commands 15 TAC15
```

To reset the command authorization configuration with privilege level 15 on VTY lines 0 to 5, use the following commands:

```
awplus# configure terminal
awplus(config)# line vty 0 5
awplus(config-line)# no authorization commands 15
```

Related Commands aaa authorization commands

aaa authorization config-commands

tacacs-server host

Command changes Version 5.4.6-2.1: command added

clear aaa local user lockout

Overview Use this command to clear the lockout on a specific user account or all user accounts.

Syntax

```
clear aaa local user lockout {username <username>|all}
```

Parameter	Description
`username`	Clear lockout for the specified user.
`<username>`	Specifies the user account.
`all`	Clear lockout for all user accounts.

Mode Privileged Exec

Examples To unlock the user account '`bob`' use the following command:

```
awplus# clear aaa local user lockout username bob
```

To unlock all user accounts use the following command:

```
awplus# clear aaa local user lockout all
```

Related Commands aaa local authentication attempts lockout-time

debug aaa

Overview This command enables AAA debugging.

Use the **no** variant of this command to disable AAA debugging.

Syntax

```
debug aaa [accounting|all|authentication|authorization]
no debug aaa [accounting|all|authentication|authorization]
```

Parameter	Description
`accounting`	Accounting debugging.
`all`	All debugging options are enabled.
`authentication`	Authentication debugging.
`authorization`	Authorization debugging.

Default AAA debugging is disabled by default.

Mode Privileged Exec

Examples To enable authentication debugging for AAA, use the command:

```
awplus# debug aaa authentication
```

To disable authentication debugging for AAA, use the command:

```
awplus# no debug aaa authentication
```

Related Commands show debugging aaa

undebug aaa

login authentication

Overview Use this command to apply an AAA server for authenticating user login attempts from a console or remote logins on these console or VTY lines. The authentication method list must be specified by the **aaa authentication login** command. If the method list has not been configured by the **aaa authentication login** command, login authentication will fail on these lines.

Use the **no** variant of this command to reset AAA Authentication configuration to use the default method list for login authentication on these console or VTY lines.

Command Syntax

```
login authentication {default|<list-name>}
no login authentication
```

Parameter	Description
`default`	The default authentication method list. If the default method list has not been configured by the aaa authentication login command, the local user database is used for user login authentication.
<list-name>	Named authentication server.

Default The default login authentication method list, as specified by the aaa authentication login command, is used to authenticate user login. If this has not been specified, the default is to use the local user database.

Mode Line Configuration

Examples To apply the authentication method list called `CONSOLE` to the console port terminal line (asyn 0), use the following commands:

```
awplus# configure terminal
awplus(config)# line console 0
awplus(config-line)# login authentication CONSOLE
```

To reset user authentication configuration on all VTY lines, use the following commands:

```
awplus# configure terminal
awplus(config)# line vty 0 32
awplus(config-line)# no login authentication
```

Related Commands aaa authentication login

line

proxy-port

Overview Use this command to change the local UDP port used for communication between local RADIUS client applications and the RadSecProxy AAA application. Any unused UDP port may be selected. The default port is 1645.

Use the **no** variant of this command to change the UDP port back to the default of 1645.

Syntax

```
proxy-port <port>
no proxy-port
```

Parameter	Description
<port>	UDP Port Number, 1-65536.

Default The default port is 1645.

Mode RadSecProxy AAA Configuration Mode

Usage It is not necessary to change the value from the default unless UDP port 1645 is required for another purpose.RADIUS requests received on this port from external devices will be ignored. The port is only used for local (intra-device) communication.

Example To configure change the UDP port to 7001, use the following commands:

```
awplus# configure terminal
awplus(config)# radius-secure-proxy aaa
awplus(config-radsecproxy-aaa)# proxy-port 7001
```

Related Commands

radius-secure-proxy aaa

server (radsecproxy-aaa)

server name-check

server trustpoint

radius-secure-proxy aaa

Overview Use this command to enter the RadSecProxy AAA (authentication, authorization, and accounting) application configuration mode. This application allows local RADIUS-based clients on system to communicate with remote RadSec servers via a secure (TLS) proxy.

Syntax

```
radius-secure-proxy aaa
```

Mode Global Configuration Mode

Example To change mode from User Exec mode to the RadSecProxy AAA configuration mode, use the commands:

```
awplus# configure terminal
awplus(config)# radius-secure-proxy aaa
awplus(config-radsecproxy-aaa)#
```

Related Commands

proxy-port

server (radsecproxy-aaa)

server name-check

server trustpoint

server (radsecproxy-aaa)

Overview Use this command to add a server to the RadSecProxy AAA application. Local RADIUS client applications will attempt, via the proxy, to communicate with any RadSec servers that are operational (in addition to any non-TLS RADIUS servers that are configured).

Use the **no** variant of this command to delete a previously-configured server from the RadSecProxy AAA application.

Syntax

```
server {<hostname>|<ip-addr>} [timeout <1-1000>] [name-check
{on|off}]
no server {<hostname>|<ip-addr>}
```

Parameter	Description	
<hostname>	Hostname of RadSec server	
<ip-addr>	Specify the client IPv4 address, in dotted decimal notation (A.B.C.D).	
timeout	Specify the amount of time that the RadSecProxy AAA application should wait before receiving replies from this server. RADIUS server timeout (which defaults to 5 seconds).	
<1-1000>	Time in seconds to wait for a server reply.	
name-check	Specify whether or not to enforce certificate name checking for this client. If the parameter is not specified then the global behavior, which defaults to **on**, is used.	
	on	Enable name checking for this client.
	off	Disable name checking for this client.

Mode RadSecProxy AAA Configuration Mode

Usage The server may be specified by its domain name or by its IPv4 address. If a domain name is used, it must be resolvable using a configured DNS name server.

Each server may be configured with a timeout; if not specified, the global timeout value for RADIUS servers will be used. The global timeout may be changed using the **radius-server timeout** command. The default global timeout is 5 seconds.

Each server may be configured to use certificate name-checking; if not specified, the global behavior defined by **server name-check** or **no server name-check** will be used. If name checking is enabled, the Common Name portion of the subject field of the server's X.509 certificate must match the domain name or IP address specified in this command.

Example To add a server which waits 3 seconds before receiving replies, use the commands:

```
awplus# configure terminal
awplus(config)# radius-secure-proxy aaa
awplus(config-radsecproxy-aaa)# client mynas.local name-check
off
```

Related Commands

proxy-port

radius-secure-proxy aaa

server name-check

server trustpoint

server mutual-authentication

Overview This command enables or disables mutual certificate authentication for all RadSecProxy servers. When enabled, the RadSecProxy AAA application will send a local X.509 certificate to the server when establishing a TLS connection.

Use the **no** variant of this command to disable mutual certificate validation causing the RadSecProxy AAA application to not transmit a certificate to the server.

NOTE: *If mutual authentication is disabled on the client (AAA) application but enabled on the server, a connection will not be established.*

Syntax

```
server mutual-authentication
no server mutual-authentication
```

Default Mutual authentication is enabled by default.

Mode RadSecProxy AAA Configuration Mode

Example Disable mutual certificate validation with the following command:

```
awplus# configure terminal
awplus(config)# radius-secure-proxy aaa
awplus(config-radsecproxy-aaa)# no server
mutual-authentication
```

Related Commands

radius-secure-proxy aaa

server name-check

server (radsecproxy-aaa)

Command changes Version 5.4.6-2.1: command added

server name-check

Overview This command sets the global behavior for certificate name-checking for the RadSecProxy AAA application to **on**. This behavior will be used for all servers associated with the application that do not specify a behavior on a per-server basis. If name-checking is enabled, the Common Name portion of the subject field of the client's X.509 certificate must match the domain name or IP address specified in the **server (radsecproxy-aaa)** command.

Use the **no** variant of this command to set the global behavior for certificate name checking to **off**

Syntax

```
server name-check
no server name-check
```

Default Certificate name checking is on by default.

Mode RadSecProxy AAA Configuration Mode

Example Disable certificate name checking globally with the following command:

```
awplus# configure terminal
awplus(config)# radius-secure-proxy aaa
awplus(config-radsecproxy-aaa)# no server name-check
```

Related Commands

proxy-port

radius-secure-proxy aaa

server (radsecproxy-aaa)

server trustpoint

server trustpoint

Overview This command adds one or more trustpoints to be used with the RadSecProxy AAA application. Multiple trustpoints may be specified, or the command may be executed more than once, to add multiple trustpoints to the application.

The **no** version of this command removes one or more trustpoints from the list of trustpoints associated with the application.

Syntax

```
server trustpoint [<trustpoint-list>]
no server trustpoint [<trustpoint-list>]
```

Parameter	Description
<trustpoint-list>	Specify one or more trustpoints to be added or deleted.

Default By default, no trustpoints are associated with the application.

Mode RadSecProxy AAA Configuration Mode

Usage The device certificate associated with first trustpoint added to the application will be transmitted to remote servers. The certificate received from the remote server must have an issuer chain that terminates with the root CA certificate for any of the trustpoints that are associated with the application.

If no trustpoints are specified in the command, the trustpoint list will be unchanged.

If **no server trustpoint** is issued without specifying any trustpoints, then all trustpoints will be disassociated from the application.

Example You can add multiple trustpoints to the RadSecProxy AAA application by executing the command multiple times:

```
awplus# configure terminal
awplus(config)# radius-secure-proxy aaa
awplus(config-radsecproxy-aaa)# server trustpoint example_1
awplus(config-radsecproxy-aaa)# server trustpoint example_2
```

Alternatively, add multiple trustpoints with a single command:

```
awplus(config-radsecproxy-aaa)# server trustpoint example_3
example_4
```

Disassociate all trustpoints from the RadSecProxy AAA application using the command:

```
awplus(config-radsecproxy-aaa)# no server trustpoint
```

Related Commands proxy-port

radius-secure-proxy aaa

server (radsecproxy-aaa)

server name-check

show aaa local user locked

Overview This command displays the current number of failed attempts, last failure time and location against each user account attempting to log into the device.

Note that once the lockout count has been manually cleared by another privileged account using the clear aaa local user lockout command or a locked account successfully logs into the system after waiting for the lockout time, this command will display nothing for that particular account.

Syntax

```
show aaa local user locked
```

Mode User Exec and Privileged Exec

Example To display the current failed attempts for local users, use the command:

```
awplus# show aaa local user locked
```

Output Figure 40-1: Example output from the **show aaa local user locked** command

```
awplus# show aaa local user locked
Login           Failures Latest failure     From
bob                  3    05/23/14 16:21:37  ttyS0
manager              5    05/23/14 16:31:44  192.168.1.200
```

Related Commands

aaa local authentication attempts lockout-time

aaa local authentication attempts max-fail

clear aaa local user lockout

show aaa server group

Overview Use this command to list AAA users and any method lists applied to them.

Syntax

```
show aaa server group
```

Mode Privileged Exec

Example To show the AAA configuration on a device, use the command:

```
awplus# aaa server group
```

Output Figure 40-2: Example output from **aaa server group**

```
awplus#show aaa server group
User          List Name     Method                  Acct-Event
======== ==== ============= ================ ======= ==========
login    auth default       -                local   -
-------- ---- ------------- ---------------- ------- ----------
login    acct -             -                -       -
-------- ---- ------------- ---------------- ------- ----------
auth-web auth default       radius           group   -
auth-web auth list1_auth    rad_group_list1  group   -
auth-web auth list2_auth    rad_group_list2  group   -
-------- ---- ------------- ---------------- ------- ----------
auth-web acct list1_acct    rad_group_list1  group   start-stop
auth-web acct list2_acct    rad_group_list2  group   start-stop
-------- ---- ------------- ---------------- ------- ----------
```

Related Commands

aaa accounting auth-web

aaa authentication auth-web

show debugging aaa

Overview This command displays the current debugging status for AAA (Authentication, Authorization, Accounting).

Syntax

```
show debugging aaa
```

Mode User Exec and Privileged Exec

Example To display the current debugging status of AAA, use the command:

```
awplus# show debug aaa
```

Output Figure 40-3: Example output from the **show debug aaa** command

```
AAA debugging status:
 Authentication debugging is on
 Accounting debugging is off
```

show radius server group

Overview Use this command to show the RADIUS server group configuration.

Syntax

```
show radius server group [<group-name>]
```

Parameter	Description
<group-name>	RADIUS server group name.

Default Command name is set to something by default.

Mode Privileged Exec

Usage Use this command with the *<group-name>* parameter to display information for a specific RADIUS server group, or without the parameter to display information for all RADIUS server groups.

Example To display information for all RADIUS server groups, use the command:

```
awplus# show radius server group
```

To display a information for a RADIUS server group named 'rad_group_list1', use the command:

```
awplus# show radius server group rad_group_list1
```

Output Figure 40-4: Example output from **show radius server group**

```
awplus#show radius server group
RADIUS Group Configuration
  Group Name : radius?
    Server Host/     Auth  Acct  Auth    Acct
    IP Address       Port  Port  Status  Status
    ----------------------------------------
    192.168.1.101    1812  1813  Active  Active
    192.168.1.102    1812  1813  Active  Active

  Group Name : rad_group_list1
    Server Host/     Auth  Acct  Auth    Acct
    IP Address       Port  Port  Status  Status
    ----------------------------------------
    192.168.1.101    1812  1813  Active  Active

  Group Name : rad_group_list2
    Server Host/     Auth  Acct  Auth    Acct
    IP Address       Port  Port  Status  Status
    ----------------------------------------
    192.168.1.102    1812  1813  Active  Active
```

Figure 40-5: Example output from **show radius server group rad_group_list1**

```
awplus#show radius server group rad_group_list1
RADIUS Group Configuration
  Group Name : rad_group_list1
    Server Host/    Auth  Acct  Auth    Acct
    IP Address      Port  Port  Status  Status
    ----------------------------------------
    192.168.1.101   1812  1813  Active  Active
```

Related Commands aaa group server

undebug aaa

Overview This command applies the functionality of the **no** debug aaa command.

41 RADIUS Commands

Introduction

Overview This chapter provides an alphabetical reference for commands used to configure the device to use RADIUS servers. For more information, see the RADIUS Feature Overview and Configuration Guide.

Command List

- "deadtime (RADIUS server group)" on page 1936
- "debug radius" on page 1937
- "ip radius source-interface" on page 1938
- "radius-server deadtime" on page 1939
- "radius-server host" on page 1940
- "radius-server key" on page 1943
- "radius-server retransmit" on page 1944
- "radius-server timeout" on page 1946
- "server (Server Group)" on page 1948
- "show debugging radius" on page 1950
- "show radius" on page 1951
- "undebug radius" on page 1954

deadtime (RADIUS server group)

Overview Use this command to configure the **deadtime** parameter for the RADIUS server group. This command overrides the global dead-time configured by the radius-server deadtime command. The configured deadtime is the time period in minutes to skip a RADIUS server for authentication or accounting requests if the server is "dead". Note that a RADIUS server is considered "dead" if there is no response from the server within a defined time period.

Use the **no** variant of this command to reset the deadtime configured for the RADIUS server group. If the global deadtime for RADIUS server is configured the value will be used for the servers in the group. The global deadtime for the RADIUS server is set to 0 minutes by default.

Syntax

```
deadtime <0-1440>
no deadtime
```

Parameter	Description
<0-1440>	Amount of time in minutes.

Default The deadtime is set to 0 minutes by default.

Mode Server Group Configuration

Usage If the RADIUS server does not respond to a request packet, the packet is retransmitted the number of times configured for the **retransmit** parameter (after waiting for a **timeout** period to expire). The server is then marked "dead", and the time is recorded. The **deadtime** parameter configures the amount of time to skip a dead server; if a server is dead, no request message is sent to the server for the **deadtime** period.

Examples To configure the deadtime for 5 minutes for the RADIUS server group "GROUP1", use the command:

```
awplus(config)# aaa group server radius GROUP1
awplus(config-sg)# server 192.168.1.1
awplus(config-sg)# deadtime 5
```

To remove the deadtime configured for the RADIUS server group "GROUP1", use the command:

```
awplus(config)# aaa group server radius GROUP1
awplus(config-sg)# no deadtime
```

Related Commands aaa group server

radius-server deadtime

debug radius

Overview This command enables RADIUS debugging. If no option is specified, all debugging options are enabled.

Use the **no** variant of this command to disable RADIUS debugging. If no option is specified, all debugging options are disabled.

Syntax

```
debug radius [packet|event|all]
no debug radius [packet|event|all]
```

Parameter	Description
`packet`	Debugging for RADIUS packets is enabled or disabled.
`event`	Debugging for RADIUS events is enabled or disabled.
`all`	Enable or disable all debugging options.

Default RADIUS debugging is disabled by default.

Mode Privileged Exec

Examples To enable debugging for RADIUS packets, use the command:

```
awplus#  debug radius packet
```

To enable debugging for RADIUS events, use the command:

```
awplus#  debug radius event
```

To disable debugging for RADIUS packets, use the command:

```
awplus# no debug radius packet
```

To disable debugging for RADIUS events, use the command:

```
awplus# no debug radius event
```

Related Commands show debugging radius

undebug radius

ip radius source-interface

Overview This command configures the source IP address of every outgoing RADIUS packet to use a specific IP address or the IP address of a specific interface. If the specified interface is down or there is no IP address on the interface, then the source IP address of outgoing RADIUS packets depends on the interface the packets leave.

Use the **no** variant of this command to remove the source interface configuration. The source IP address in outgoing RADIUS packets will be the IP address of the interface from which the packets are sent.

Syntax

```
ip radius source-interface {<interface>|<ip-address>}
no ip radius source-interface
```

Parameter	Description
<interface>	Interface name.
<ip-address>	IP address in the dotted decimal format A.B.C.D.

Default Source IP address of outgoing RADIUS packets depends on the interface the packets leave.

Mode Global Configuration

Examples To configure all outgoing RADIUS packets to use the IP address of the interface “vlan1” for the source IP address, use the following commands:

```
awplus# configure terminal
awplus(config)# ip radius source-interface vlan1
```

To configure the source IP address of all outgoing RADIUS packets to use 192.168.1.10, use the following commands:

```
awplus# configure terminal
awplus(config)# ip radius source-interface 192.168.1.10
```

To reset the source interface configuration for all outgoing RADIUS packets, use the following commands:

```
awplus# configure terminal
awplus(config)# no ip radius source-interface
```

Related Commands radius-server host

radius-server deadtime

Overview Use this command to specify the global **deadtime** for all RADIUS servers. If a RADIUS server is considered dead, it is skipped for the specified deadtime. This command specifies for how many minutes a RADIUS server that is not responding to authentication requests is passed over by requests for RADIUS authentication.

Use the **no** variant of this command to reset the global deadtime to the default of 0 seconds, so that RADIUS servers are not skipped even if they are dead.

Syntax

```
radius-server deadtime <minutes>
no radius-server deadtime
```

Parameter	Description
<minutes>	RADIUS server deadtime in minutes in the range 0 to 1440 (24 hours).

Default The default RADIUS deadtime configured on the system is 0 seconds.

Mode Global Configuration

Usage The RADIUS client considers a RADIUS server to be dead if it fails to respond to a request after it has been retransmitted as often as specified globally by the radius-server retransmit command or for the server by the radius-server host command. To improve RADIUS response times when some servers may be unavailable, set a **deadtime** to skip dead servers.

Examples To set the dead time of the RADIUS server to 60 minutes, use the following commands:

```
awplus# configure terminal
awplus(config)# radius-server deadtime 60
```

To disable the dead time of the RADIUS server, use the following commands:

```
awplus# configure terminal
awplus(config)# no radius-server deadtime
```

Related Commands

deadtime (RADIUS server group)

radius-server host

radius-server retransmit

radius-server host

Overview Use this command to specify a remote RADIUS server host for authentication or accounting, and to set server-specific parameters. The parameters specified with this command override the corresponding global parameters for RADIUS servers. This command specifies the IP address or host name of the remote RADIUS server host and assigns authentication and accounting destination UDP port numbers.

This command adds the RADIUS server address and sets parameters to the RADIUS server. The RADIUS server is added to the running configuration after you issue this command. If parameters are not set using this command then common system settings are applied.

Use the **no** variant of this command to remove the specified server host as a RADIUS authentication and/or accounting server and set the destination port to the default RADIUS server port number (1812).

Syntax

```
radius-server host {<host-name>|<ip-address>} [acct-port
<0-65535>] [auth-port <0-65535>] [key <key-string>] [retransmit
<0-100>] [timeout <1-1000>]
```

```
no radius-server host {<host-name>|<ip-address>} [acct-port
<0-65535>] [auth-port <0-65535>]
```

Parameter	Description
<host-name>	Server host name. The DNS name of the RADIUS server host.
<ip-address>	The IP address of the RADIUS server host.
`acct-port`	Accounting port. Specifies the UDP destination port for RADIUS accounting requests. If 0 is specified, the server is not used for accounting. The default UDP port for accounting is 1813.
<0-65535>	UDP port number (Accounting port number is set to 1813 by default) Specifies the UDP destination port for RADIUS accounting requests. If 0 is specified, the host is not used for accounting.
`auth-port`	Authentication port. Specifies the UDP destination port for RADIUS authentication requests. If 0 is specified, the server is not used for authentication. The default UDP port for authentication is 1812.
<0-65535>	UDP port number (Authentication port number is set to 1812 by default) Specifies the UDP destination port for RADIUS authentication requests. If 0 is specified, the host is not used for authentication.
`timeout`	Specifies the amount of time to wait for a response from the server. If this parameter is not specified the global value configured by the **radius-server timeout** command is used.

Parameter	Description
<1-1000>	Time in seconds to wait for a server reply (timeout is set to 5 seconds by default) The time interval (in seconds) to wait for the RADIUS server to reply before retransmitting a request or considering the server dead. This setting overrides the global value set by the **radius-server timeout** command. If no timeout value is specified for this server, the global value is used.
`retransmit`	Specifies the number of retries before skip to the next server. If this parameter is not specified the global value configured by the **radius-server retransmit** command is used.
<0-100>	Maximum number of retries (maximum number of retries is set to 3 by default) The maximum number of times to resend a RADIUS request to the server, if it does not respond within the timeout interval, before considering it dead and skipping to the next RADIUS server. This setting overrides the global setting of the **radius-server retransmit** command. If no retransmit value is specified, the global value is used.
`key`	Set shared secret key with RADIUS servers
<key-string>	Shared key string applied Specifies the shared secret authentication or encryption key for all RADIUS communications between this device and the RADIUS server. This key must match the encryption used on the RADIUS daemon. All leading spaces are ignored, but spaces within and at the end of the string are used. If spaces are used in the string, do not enclose the string in quotation marks unless the quotation marks themselves are part of the key. This setting overrides the global setting of the **radius-server key c** ommand. If no key value is specified, the global value is used.

Default The RADIUS client address is not configured (null) by default. No RADIUS server is configured.

Mode Global Configuration

Usage Multiple **radius -server host** commands can be used to specify multiple hosts. The software searches for hosts in the order they are specified. If no host-specific timeout, retransmit, or key values are specified, the global values apply to that host. If there are multiple RADIUS servers for this client, use this command multiple times—once to specify each server.

If you specify a host without specifying the auth port or the acct port, it will by default be configured for both authentication and accounting, using the default UDP ports. To set a host to be a RADIUS server for authentication requests only, set the **acct-port** parameter to 0; to set the host to be a RADIUS server for accounting requests only, set the auth-port parameter to 0.

A RADIUS server is identified by IP address, authentication port and accounting port. A single host can be configured multiple times with different authentication or accounting ports. All the RADIUS servers configured with this command are

included in the predefined RADIUS server group radius, which may be used by AAA authentication, authorization and accounting commands. The client transmits (and retransmits, according to the **retransmit** and **timeout** parameters) RADIUS authentication or accounting requests to the servers in the order you specify them, until it gets a response.

Examples To add the RADIUS server `10.0.0.20`, use the following commands:

```
awplus# configure terminal
awplus(config)# radius-server host 10.0.0.20
```

To set the secret key to **allied** on the RADIUS server `10.0.0.20`, use the following commands:

```
awplus# configure terminal
awplus(config)# radius-server host 10.0.0.20 key allied
```

To delete the RADIUS server `10.0.0.20`, use the following commands:

```
awplus# configure terminal
awplus(config)# no radius-server host 10.0.0.20
```

To configure `rad1.company.com` for authentication only, use the following commands:

```
awplus# configure terminal
awplus(config)# radius-server host rad1.company.com acct-port 0
```

To remove the RADIUS server `rad1.company.com` configured for authentication only, use the following commands:

```
awplus# configure terminal
awplus(config)# no radius-server host rad1.company.com
acct-port 0
```

To configure `rad2.company.com` for accounting only, use the following commands:

```
awplus# configure terminal
awplus(config)# radius-server host rad2.company.com auth-port 0
```

To configure 192.168.1.1 with authentication port 1000, accounting port 1001 and retransmit count 5, use the following commands:

```
awplus# configure terminal
awplus(config)# radius-server host 192.168.1.1 auth-port 1000
acct-port 1001 retransmit 5
```

Related Commands

aaa group server

radius-server key

radius-server retransmit

radius-server timeout

radius-server key

Overview This command sets a global secret key for RADIUS authentication on the device. The shared secret text string is used for RADIUS authentication between the device and a RADIUS server.

Note that if no secret key is explicitly specified for a RADIUS server, the global secret key will be used for the shared secret for the server.

Use the **no** variant of this command to reset the secret key to the default (null).

Syntax

```
radius-server key <key>
no radius-server key
```

Parameter	Description
<key>	Shared secret among radius server and 802.1X client.

Default The RADIUS server secret key on the system is not set by default (null).

Mode Global Configuration

Usage Use this command to set the global secret key shared between this client and its RADIUS servers. If no secret key is specified for a particular RADIUS server using the **radius-server host c** ommand, this global key is used.

After enabling AAA authentication with the **aaa authentication login** command, set the authentication and encryption key using the **radius-server key** command so the key entered matches the key used on the RADIUS server.

Examples To set the global secret key to **allied** for RADIUS server, use the following commands:

```
awplus# configure terminal
awplus(config)# radius-server key allied
```

To set the global secret key to **secret** for RADIUS server, use the following commands:

```
awplus# configure terminal
awplus(config)# radius-server key secret
```

To delete the global secret key for RADIUS server, use the following commands:

```
awplus# configure terminal
awplus(config)# no radius-server key
```

Related Commands radius-server host

radius-server retransmit

Overview This command sets the retransmit counter to use RADIUS authentication on the device. This command specifies how many times the device transmits each RADIUS request to the RADIUS server before giving up.

This command configures the **retransmit** parameter for RADIUS servers globally. If the **retransmit** parameter is not specified for a RADIUS server by the **radius-server host** command then the global configuration set by this command is used for the server instead.

Use the **no** variant of this command to reset the re-transmit counter to the default (3).

Syntax

```
radius-server retransmit <retries>
no radius-server retransmit
```

Parameter	Description
<retries>	RADIUS server retries in the range <0-100>. The number of times a request is resent to a RADIUS server that does not respond, before the server is considered dead and the next server is tried. If no retransmit value is specified for a particular RADIUS server using the **radius-server host** command, this global value is used.

Default The default RADIUS retransmit count on the device is 3.

Mode Global Configuration

Examples To set the RADIUS **retransmit** count to 1, use the following commands:

```
awplus# configure terminal
awplus(config)# radius-server retransmit 1
```

To set the RADIUS **retransmit** count to the default (3), use the following commands:

```
awplus# configure terminal
awplus(config)# no radius-server retransmit
```

To configure the RADIUS **retransmit** count globally with 5, use the following commands:

```
awplus# configure terminal
awplus(config)# radius-server retransmit 5
```

To disable retransmission of requests to a RADIUS server, use the following commands:

```
awplus# configure terminal
awplus(config)# radius-server retransmit 0
```

Related Commands

radius-server deadtime

radius-server host

radius-server timeout

Overview Use this command to specify the RADIUS global timeout value. This is how long the device waits for a reply to a RADIUS request before retransmitting the request, or considering the server to be dead. If no timeout is specified for the particular RADIUS server by the **radius-server host** command, it uses this global timeout value.

Note that this command configures the **timeout** parameter for RADIUS servers globally.

The **no** variant of this command resets the transmit timeout to the default (5 seconds).

Syntax

```
radius-server timeout <seconds>
no radius-server timeout
```

Parameter	Description
<seconds>	RADIUS server timeout in seconds in the range 1 to 1000. The global time in seconds to wait for a RADIUS server to reply to a request before retransmitting the request, or considering the server to be dead (depending on the **radius-server retransmit** command).

Default The default RADIUS transmit timeout on the system is 5 seconds.

Mode Global Configuration

Examples To globally set the device to wait 20 seconds before retransmitting a RADIUS request to unresponsive RADIUS servers, use the following commands:

```
awplus# configure terminal
awplus(config)# radius-server timeout 20
```

To set the RADIUS **timeout** parameter to 1 second, use the following commands:

```
awplus# configure terminal
awplus(config)# radius-server timeout 1
```

To set the RADIUS **timeout** parameter to the default (5 seconds), use the following commands:

```
awplus# configure terminal
awplus(config)# no radius-server timeout
```

To configure the RADIUS server **timeout** period globally with 3 seconds, use the following commands:

```
awplus# configure terminal
awplus(config)# radius-server timeout 3
```

To reset the global **timeout** period for RADIUS servers to the default, use the following command:

```
awplus# configure terminal
awplus(config)# no radius-server timeout
```

Related Commands

radius-server deadtime

radius-server host

radius-server retransmit

server (Server Group)

Overview This command adds a RADIUS server to a server group in Server-Group Configuration mode. The RADIUS server should be configured by the radius-server host command.

The server is appended to the server list of the group and the order of configuration determines the precedence of servers. If the server exists in the server group already, it will be removed before added as a new server.

The server is identified by IP address and authentication and accounting UDP port numbers. So a RADIUS server can have multiple entries in a group with different authentication and/or accounting UDP ports. The **auth-port** specifies the UDP destination port for authentication requests to the server. To disable authentication for the server, set `auth-port` to 0. If the authentication port is missing, the default port number is 1812. The **acct-port** specifies the UDP destination port for accounting requests to the server. To disable accounting for the server, set `acct-port` to 0. If the accounting port is missing, the default port number is 1812.

Use the **no** variant of this command to remove a RADIUS server from the server group.

Syntax

```
server {<hostname>|<ip-address>} [auth-port
<0-65535>][acct-port <0-65535>]
```

```
no server {<hostname>|<ip-address>} [auth-port
<0-65535>][acct-port <0-65535>]
```

Parameter	Description
<hostname>	Server host name
<ip-address>	Server IP address The server is identified by IP address, authentication and accounting UDP port numbers. So a RADIUS server can have multiple entries in a group with different authentication and/or accounting UDP ports.
`auth-port`	Authentication port The **auth-port** specifies the UDP destination port for authentication requests to the server. To disable authentication for the server, set **auth-port** to 0. If the authentication port is missing, the default port number is 1812.
<0-65535>	UDP port number (default: 1812)
`acct-port`	Accounting port The **acct-port** specifies the UDP destination port for accounting requests to the server. To disable accounting for the server, set **acct-port** to 0. If the accounting port is missing, the default port number is 1813.
<0-65535>	UDP port number (default: 1813)

Default The default Authentication port number is 1812 and the default Accounting port number is 1813.

Mode Server Group Configuration

Usage The RADIUS server to be added must be configured by the **radius-server host** command. In order to add or remove a server, the **auth-port** and **acct-port** parameters in this command must be the same as the corresponding parameters in the **radius-server host** command.

Examples To create a RADIUS server group RAD_AUTH1 for authentication, use the following commands:

```
awplus# configure terminal
awplus(config)# aaa group server radius RAD_AUTH1
awplus(config-sg)# server 192.168.1.1 acct-port 0
awplus(config-sg)# server 192.168.2.1 auth-port 1000 acct-port
0
```

To create a RADIUS server group RAD_ACCT1 for accounting, use the following commands:

```
awplus# configure terminal
awplus(config)# aaa group server radius RAD_ACCT1
awplus(config-sg)# server 192.168.2.1 auth-port 0 acct-port
1001
awplus(config-sg)# server 192.168.3.1 auth-port 0
```

To remove server 192.168.3.1 from the existing server group **GROUP1**, use the following commands:

```
awplus# configure terminal
awplus(config)# aaa group server radius GROUP1
awplus(config-sg)# no server 192.168.3.1
```

Related Commands

aaa accounting login

aaa authentication login

aaa group server

radius-server host

show debugging radius

Overview This command displays the current debugging status for the RADIUS servers.

Syntax

```
show debugging radius
```

Mode User Exec and Privileged Exec

Example To display the current debugging status of RADIUS servers, use the command:

```
awplus# show debugging radius
```

Output Figure 41-1: Example output from the **show debugging radius** command

```
RADIUS debugging status:
 RADIUS event debugging is off
 RADIUS packet debugging is off
```

show radius

Overview This command displays the current RADIUS server configuration and status.

Syntax

```
show radius
```

Mode User Exec and Privileged Exec

Example To display the current status of RADIUS servers, use the command:

```
awplus# show radius
```

Output Figure 41-2: Example output from the **show radius** command showing RADIUS servers

```
RADIUS Global Configuration
 Source Interface : not configured
 Secret Key : secret
 Timeout : 5 sec
 Retransmit Count : 3
 Deadtime : 20 min
Server Host : 192.168.1.10
 Authentication Port : 1812
 Accounting Port : 1813
 Secret Key : secret
 Timeout : 3 sec
 Retransmit Count : 2
Server Host : 192.168.1.11
 Authentication Port : 1812
 Accounting Port : not configured

Server Name/   Auth   Acct   Auth     Acct
IP Address     Port   Port   Status   Status
-----------------------------------------------------------
192.168.1.10   1812   1813   Alive    Alive
192.168.1.11   1812   N/A    Alive    N/A
```

Example See the sample output below showing RADIUS client status and RADIUS configuration:

```
awplus# show radius
```

Output Figure 41-3: Example output from the **show radius** command showing RADIUS client status

```
RADIUS global interface name: awplus
 Secret key:
 Timeout: 5
 Retransmit count: 3
 Deadtime: 0

Server Address: 150.87.18.89
 Auth destination port: 1812
 Accounting port: 1813
 Secret key: swg
 Timeout: 5
 Retransmit count: 3
 Deadtime: 0show radius local-server group
```

Output Parameter	Meaning
Source Interface	The interface name or IP address to be used for the source address of all outgoing RADIUS packets.
Secret Key	A shared secret key to a radius server.
Timeout	A time interval in seconds.
Retransmit Count	The number of retry count if a RADIUS server does not response.
Deadtime	A time interval in minutes to mark a RADIUS server as “dead”.
Interim-Update	A time interval in minutes to send Interim-Update Accounting report.
Group Deadtime	The deadtime configured for RADIUS servers within a server group.
Server Host	The RADIUS server hostname or IP address.
Authentication Port	The destination UDP port for RADIUS authentication requests.
Accounting Port	The destination UDP port for RADIUS accounting requests.

Output Parameter	Meaning	
`Auth Status`	The status of the authentication port. The status ("dead", "error", or "alive") of the RADIUS authentication server and, if dead, how long it has been dead for.	
	`Alive`	The server is alive.
	`Error`	The server is not responding.
	`Dead`	The server is detected as dead and it will not be used for deadtime period. The time displayed in the output shows the server is in dead status for that amount of time.
	`Unknown`	The server is never used or the status is unknown.
`Acct Status`	The status of the accounting port. The status ("dead", "error", or "alive") of the RADIUS accounting server and, if dead, how long it has been dead for.	

undebug radius

Overview This command applies the functionality of the **no** debug radius command.

42 Local RADIUS Server Commands

Introduction

Overview This chapter provides an alphabetical reference for commands used to configure the local RADIUS server on the device. For more information, see the Local RADIUS Server Feature Overview and Configuration Guide.

Command List

- "attribute" on page 1957
- "authentication" on page 1960
- "client (radsecproxy-srv)" on page 1961
- "client mutual-authentication" on page 1963
- "client name-check" on page 1964
- "client trustpoint" on page 1965
- "clear radius local-server statistics" on page 1966
- "copy fdb-radius-users (to file)" on page 1967
- "copy local-radius-user-db (from file)" on page 1969
- "copy local-radius-user-db (to file)" on page 1970
- "crypto pki enroll local (deleted)" on page 1971
- "crypto pki enroll local local-radius-all-users (deleted)" on page 1972
- "crypto pki enroll local user (deleted)" on page 1973
- "crypto pki export local pem (deleted)" on page 1974
- "crypto pki export local pkcs12 (deleted)" on page 1975
- "crypto pki trustpoint local (deleted)" on page 1976
- "debug crypto pki (deleted)" on page 1977
- "domain-style" on page 1978
- "egress-vlan-id" on page 1979

- "egress-vlan-name" on page 1980
- "group" on page 1981
- "nas" on page 1982
- "radius-secure-proxy local-server" on page 1983
- "radius-server local" on page 1984
- "server auth-port" on page 1985
- "server enable" on page 1986
- "show crypto pki certificates (deleted)" on page 1987
- "show crypto pki certificates local-radius-all-users (deleted)" on page 1988
- "show crypto pki certificates user (deleted)" on page 1989
- "show crypto pki trustpoints (deleted)" on page 1990
- "show radius local-server group" on page 1991
- "show radius local-server nas" on page 1992
- "show radius local-server statistics" on page 1993
- "show radius local-server user" on page 1994
- "user (RADIUS server)" on page 1996
- "vlan (RADIUS server)" on page 1998

attribute

Overview Use this command to define a RADIUS attribute for the local RADIUS server user group.

For a complete list of defined RADIUS attributes and values, see the Local RADIUS Server Feature Overview and Configuration Guide.

When used with the **help** parameter the **attribute** command displays a list of standard and vendor specific valid RADIUS attributes that are supported by the local RADIUS server.

If an attribute name is specified with the **help** parameter, then the **attribute** command displays a list of predefined attribute names. Note that you can only use the defined RADIUS attribute names and not define your own.

When used with the **value** parameter the **attribute** command configures RADIUS attributes to the user group. If the specified attribute is already defined then it is replaced with the new value.

Use the **no** variant of this command to delete an attribute from the local RADIUS server user group.

Syntax

```
attribute [<attribute-name>|<attribute-id>] help
attribute {<attribute-name>|<attribute-id>} <value>
no attribute {<attribute-name>|<attribute-id>}
```

Parameter	Description
<attribute-name>	RADIUS attribute name for standard attributes or Vendor-Specific attributes (see the Local RADIUS Server Feature Overview and Configuration Guide for tables of attributes).
<attribute-id>	RADIUS attribute numeric identifier for standard attributes.
<value>	RADIUS attribute value.
`help`	Display a list of available attribute types.

Default By default, no attributes are configured.

Mode RADIUS Server Group Configuration

Usage For the Standard attributes, the attribute may be specified using either the attribute name, or its numeric identifier. For example, the command:

```
awplus(config-radsrv-group)# attribute acct-terminate-cause
help
```

will produce the same results as the command:

```
awplus(config-radsrv-group)# attribute 49 help
```

In the same way, where the specific attribute has a pre-defined value, the parameter <*value*> may be substituted with the Value Name or with its numeric value, for example the command:

```
awplus(config-radsrv-group)# attribute acct-terminate-cause
user-request
```

will produce the same results as the command:

```
awplus(config-radsrv-group)# attribute 49 1
```

or the command:

```
awplus(config-radsrv-group)# attribute acct-terminate-cause 1
```

Examples To check a list of all available defined RADIUS attribute names, use the following commands:

```
awplus# configure terminal
awplus(config)# radius-server local
awplus(config-radsrv)# group Admin
awplus(config-radsrv-group)# attribute help
```

A list of Vendor-specific Attributes displays after the list of defined Standard Attributes.

To get help for valid RADIUS attribute values for the attribute `Service-Type`, use the following commands:

```
awplus# configure terminal
awplus(config)# radius-server local
awplus(config-radsrv)# group Admin
awplus(config-radsrv-group)# attribute Service-Type help
```

This results in the following output:

```
Service-Type : integer (Integer number)

Pre-defined values :
    Administrative-User (6)
    Authenticate-Only (8)
    Authorize-Only (17)
    Callback-Administrative (11)
    Callback-Framed-User (4)
    Callback-Login-User (3)
    Callback-NAS-Prompt (9)
    Call-Check (10)
    Framed-User (2)
    Login-User (1)
    NAS-Prompt-User (7)
    Outbound-User (5)
```

To define the attribute name 'Service-Type' with Administrative User (6) to the RADIUS User Group 'Admin', use the following commands:

```
awplus# configure terminal
awplus(config)# radius-server local
awplus(config-radsrv)# group Admin
awplus(config-radsrv-group)# attribute Service-Type 6
```

To delete the attribute 'Service-Type' from the RADIUS User Group 'Admin', use the following commands:

```
awplus# configure terminal
awplus(config)# radius-server local
awplus(config-radsrv)# group Admin
awplus(config-radsrv-group)# no attribute Service-Type
```

Related Commands

egress-vlan-id

egress-vlan-name

authentication

Overview Use this command to enable the specified authentication methods on the local RADIUS server.

Use the **no** variant of this command to disable specified authentication methods on the local RADIUS server.

Syntax

```
authentication {mac|eapmd5|eaptls|peap}
no authentication {mac|eapmd5|eaptls|peap}
```

Parameter	Description
`mac`	Enable MAC authentication method.
`eapmd5`	Enable EAP-MD5 authentication method.
`eaptls`	Enable EAP-TLS authentication method.
`peap`	Enable EAP-PEAP authentication method.

Default All authentication methods are enabled by default.

Mode RADIUS Server Configuration

Examples The following commands enable EAP-MD5 authentication methods on the local RADIUS server.

```
awplus# configure terminal
awplus(config)# radius-server local
awplus(config-radsrv)# authentication eapmd5
```

The following commands disable EAP-MD5 authentication methods on Local RADIUS server.

```
awplus# configure terminal
awplus(config)# radius-server local
awplus(config-radsrv)# no authentication eapmd5
```

Related Commands server enable

show radius local-server statistics

client (radsecproxy-srv)

Overview Use this command to add a RadSec client (for example, a NAS device) to the RadSecProxy local-server application. The application will accept RADIUS requests from all configured clients.

Use the **no** variant of this command to delete a previously-configured client from the RadSecProxy local-server application.

Syntax

```
client {<hostname>|<ip-addr>} [name-check {on|off}]
no client {<hostname>|<ip-addr>}
```

Parameter	Description	
<hostname>	Hostname of client.	
<ip-addr>	Specify the client IPv4 address, in dotted decimal notation (A.B.C.D).	
name-check	Specify whether or not to enforce certificate name checking for this client. If the parameter is not specified then the global behavior, which defaults to **on**, is used.	
	on	Enable name checking for this client.
	off	Disable name checking for this client.

Mode RadSecProxy Local Server Configuration

Usage The client may be specified by its domain name or by its IPv4 address. If a domain name is used, it must be resolvable using a configured DNS name server.

Each client may be configured to use certificate name-checking; if not specified, the global behavior defined by **client name-check** or **no client name-check** will be used. If name checking is enabled, the Common Name portion of the subject field of the client's X.509 certificate must match the domain name or IP address specified in this command.

NOTE: *If mutual authentication is disabled then this parameter has no effect, see the client mutual-authentication command.*

Example To add a client called 'mynas.local' with certificate name checking **off**, use the commands:

```
awplus# configure terminal
awplus(config)# radius-secure-proxy local-server
awplus(config-radsecproxy-srv)# client mynas.local name-check
off
```

Related Commands

client mutual-authentication

client name-check

client trustpoint

radius-secure-proxy local-server

client mutual-authentication

Overview This command enables or disables mutual certificate authentication for all RadSecProxy clients. When enabled, the RadSecProxy local-server application will request and validate an X.509 certificate from the client when establishing a connection.

The **no** variant of this command disables mutual certificate validation. The local-server application will still transmit the local server certificate to the client, but will not expect or validate a certificate from the client.

Syntax

```
client mutual-authentication
no client mutual-authentication
```

Default Mutual authentication is enabled by default.

Mode RadSecProxy Local Server Configuration

Example Disable mutual certificate validation with the following command:

```
awplus# configure terminal
awplus(config)# radius-secure-proxy local-server
awplus(config-radsecproxy-srv)# no client
mutual-authentication
```

Related Commands

client (radsecproxy-srv)

client name-check

radius-secure-proxy local-server

Command changes Version 5.4.6-2.1: command added

client name-check

Overview This command sets the global behavior for certificate name-checking for the RadSecProxy localserver application to **on**. This behavior will be used for all clients associated with the application that do not specify a behavior on a per-client basis. If name-checking is enabled, the Common Name portion of the subject field of the client's X.509 certificate must match the domain name or IP address specified in the **client (radsecproxy-aaa)** command.

Use the **no** variant of this command to set the global behavior for certificate name checking to **off**

Syntax

```
client name-check
no client name-check
```

Default Certificate name checking is on by default.

Mode RadSecProxy Local Server Configuration

Example Disable certificate name checking globally with the following command:

```
awplus# configure terminal
awplus(config)# radius-secure-proxy local-server
awplus(config-radsecproxy-srv)# no client name-check
```

Related Commands

client (radsecproxy-srv)

client trustpoint

radius-secure-proxy local-server

client trustpoint

Overview This command adds one or more trustpoints to be used with the RadSecProxy local-server application. Multiple trustpoints may be specified, or the command may be executedmore than once, to add multiple trustpoints to the application.

The **no** version of this command removes one or more trustpoints from the list of trustpoints associated with the application.

Syntax

```
client trustpoint [<trustpoint-list>]
no client trustpoint [<trustpoint-list>]
```

Parameter	Description
<trustpoint-list>	Specify one or more trustpoints to be added or deleted.

Mode RadSecProxy Local Server Configuration

Usage The device certificate associated with first trustpoint added to the application will be transmitted to remote servers. The certificate received from the remote server must have an issuer chain that terminates with the root CA certificate for any of the trustpoints that are associated with the application.

If no trustpoints are specified in the command, the trustpoint list will be unchanged.

If **no client trustpoint** is issued without specifying any trustpoints, then all trustpoints will be disassociated from the application.

Example You can add multiple trustpoints to the RadSecProxy local-server by executing the command multiple times:

```
awplus# configure terminal
awplus(config)# radius-secure-proxy local-server
awplus(config-radsecproxy-srv)# client trustpoint example_1
awplus(config-radsecproxy-srv)# client trustpoint example_2
```

Alternatively, add multiple trustpoints with a single command:

```
awplus(config-radsecproxy-srv)# client trustpoint example_3
example_4
```

Disassociate all trustpoints from the RadSecProxy local-server application using the command:

```
awplus(config-radsecproxy-srv)# no client trustpoint
```

Related Commands

client (radsecproxy-srv)

client name-check

radius-secure-proxy local-server

clear radius local-server statistics

Overview Use this command to clear the statistics stored on the device for the local RADIUS server.

Use this command without any parameters to clear all types of local RADIUS server statistics.

Syntax

```
clear radius local-server statistics [nas|server|user]
```

Parameter	Description
`nas`	Clear the NAS (Network Access Server) statistics on the device. For example, clearing statistics stored for NAS server invalid passwords.
`server`	Clear the Local RADIUS Server statistics on the device. For example, clearing Local RADIUS Servers statistics for all failed login attempts.
`user`	Clear the Local RADIUS Server user statistics. For example, clearing statistics stored for the number of successful user logins.

Mode Privileged Exec

Usage Refer to the sample output for the show radius local-server statistics for further information about the type of statistics each parameter option for this command clears. Both the **nas** and **server** parameters clear unknown username and invalid passwords statistics, while the `user` parameter clears the number of successful and failed logins for each local RADIUS server user.

Examples To clear the NAS (Network Access Server) statistics stored on the device, use the command:

```
awplus# clear radius local-server statistics nas
```

To clear the local RADIUS server statistics stored on the device, use the command:

```
awplus# clear radius local-server statistics server
```

To clear the local RADIUS server user statistics stored on the device, use the command:

```
awplus# clear radius local-server statistics user
```

Related Commands show radius local-server statistics

copy fdb-radius-users (to file)

Overview Use this command to create a set of local RADIUS server users from MAC addresses in the local FDB. A local RADIUS server user created using this command can be used for MAC authentication.

Syntax

```
copy fdb-radius-users
{local-radius-user-db|nvs|flash|usb|debug|tftp|scp|
fserver|<url>} [interface <port>] [vlan <vid>] [group <name>]
[export-vlan [<radius-group-name>]]
```

Parameter	Description
`local-radius-user-db`	Copy the local RADIUS server users created to the local RADIUS server.
`nvs`	Copy the local RADIUS server users created to NVS memory.
`flash`	Copy the local RADIUS server users created to Flash memory.
`card`	Copy the local RADIUS server users created to SD card.
`usb`	Copy the local RADIUS server users created to USB storage device.
`debug`	Copy the local RADIUS server users created to debug.
`tftp`	Copy the local RADIUS server users created to the TFTP destination.
`scp`	Copy the local RADIUS server users created to the SCP destination.
`fserver`	Copy the local RADIUS server users created to the remote file server.
<url>	Copy the local RADIUS server users created to the specified URL.
`interface` *<port>*	Copy only MAC addresses learned on a specified device port. Wildcards may be used when specifying an interface name.
`vlan` *<vid>*	Copy only MAC addresses learned on a specified VLAN.
`group` *<name>*	Assign a group name to the local RADIUS server users created.
`export-vlan`	Export VLAN ID assigned to exported FDB entry.
<radius-group-name>	Prefix for Radius group name storing VLAN ID

Mode Privileged Exec

Usage The local RADIUS server users created are written to a specified destination file in local RADIUS user CSV (Comma Separated Values) format. The local RADIUS server users can then be imported to a local RADIUS server using the copy local-radius-user-db (from file) command.

The name and password of the local RADIUS server users created use a MAC address, which can be used for MAC authentication.

This command does not copy a MAC address learned by the CPU or the management port.

This command can filter FDB entries by the interface name and the VLAN ID. When the interface name and the VLAN ID are specified, this command generates local RADIUS server users from only the MAC address learned on the specified interface and on the specified VLAN.

Examples To register the local RADIUS server users from the local FDB directly to the local RADIUS server, use the command:

```
awplus# copy fdb-radius-users local-radius-user-db
```

To register the local RADIUS server users from the interface `port1.0.1` to the local RADIUS server, use the command:

```
awplus# copy fdb-radius-users local-radius-user-db interface
port1.0.1
```

To copy output generated as local RADIUS server user data from MAC addresses learned on `vlan10` on interface `port1.0.1` to the file `radius-user.csv`, use the command:

```
awplus# copy fdb-radius-users radius-user.csv interface
port1.0.1 vlan10
```

To copy output generated as local RADIUS server user data from MAC addresses learned on `vlan10` on interface `port1.0.1` to a file on the remote file server, use the command:

```
awplus# copy fdb-radius-users fserver interface port1.0.1
vlan10
```

Related Commands copy local-radius-user-db (to file)

copy local-radius-user-db (from file)

copy local-radius-user-db (from file)

Overview Use this command to copy the Local RADIUS server user data from a file. The file, including the RADIUS user data in the file, must be in the CSV (Comma Separated Values) format.

You can select **add** or **replace** as the copy method. The **add** parameter option copies the contents of specified file to the local RADIUS server user database. If the same user exists then the old user is removed before adding a new user. The **replace** parameter option deletes all contents of the local RADIUS server user database before copying the contents of specified file.

Syntax

```
copy <source-url> local-radius-user-db [add|replace]
```

Parameter	Description
<source-url>	URL of the source file.
`add`	Add file contents to local RADIUS server user database.
`replace`	Replace current local RADIUS server user database with file contents.

Default When no copy method is specified with this command the **replace** option is applied.

Mode Privileged Exec

Examples To replace the current local RADIUS server user data to the contents of http://datahost/ user.csv, use the following command:

```
awplus# copy http://datahost/user.csv local-radius-user-db
```

To add the contents of http://datahost/user.csv to the current local RADIUS server user database, use the following command:

```
awplus# copy http://datahost/user.csv local-radius-user-db add
```

Related commands copy fdb-radius-users (to file)

copy local-radius-user-db (to file)

copy local-radius-user-db (to file)

Overview Use this command to copy the local RADIUS server user data to a file. The output file produced is CSV (Comma Separated Values) format.

Syntax

```
copy local-radius-user-db
{nvs|flash|card|usb|tftp|scp|<destination-url>}
```

Parameter	Description
`nvs`	Copy to NVS memory.
`flash`	Copy to Flash memory.
`card`	Copy to SD card.
`usb`	Copy to USB storage device.
`tftp`	Copy to TFTP destination.
`scp`	Copy to SCP destination.
<destination-url>	URL of the Destination file.

Mode Privileged Exec

Example Copy the current local RADIUS server user data to http://datahost/user.csv.

```
awplus# copy local-radius-user-db http://datahost/user.csv
```

Related Commands

copy fdb-radius-users (to file)

copy local-radius-user-db (from file)

crypto pki enroll local (deleted)

Overview This command is no longer available. Please use the following command instead:

```
crypto pki enroll <trustpoint>
```

Note that “local” is a valid name for a trustpoint, so you do not need to modify existing configurations or scripts.

crypto pki enroll local local-radius-all-users (deleted)

Overview This command is no longer available. Please use the following command instead:

```
crypto pki enroll <trustpoint> local-radius-all-users
```

Note that “local” is a valid name for a trustpoint, so you do not need to modify existing configurations or scripts.

crypto pki enroll local user (deleted)

Overview This command is no longer available. Please use the following command instead:

```
crypto pki enroll <trustpoint> user <username>
```

Note that “local” is a valid name for a trustpoint, so you do not need to modify existing configurations or scripts.

crypto pki export local pem (deleted)

Overview This command is no longer available. Please use the crypto pki export pem command instead:

```
crypto pki export <trustpoint> pem [terminal|<url>]
```

Note that “local” is a valid name for a trustpoint, so you do not need to modify existing configurations or scripts.

crypto pki export local pkcs12 (deleted)

Overview This command is no longer available. Please use the crypto pki export pkcs12 command instead:

```
crypto pki export <trustpoint> pkcs12 {ca|server|<username>}
<url>
```

Note that “local” is a valid name for a trustpoint, so you do not need to modify existing configurations or scripts.

crypto pki trustpoint local (deleted)

Overview This command is no longer available. Please use the following command instead:

```
crypto pki trustpoint <trustpoint>
```

Note that “local” is a valid name for a trustpoint, so you do not need to modify existing configurations or scripts.

debug crypto pki (deleted)

Overview This command is no longer available.

domain-style

Overview Use this command to enable a specified domain style on the local RADIUS server. The local RADIUS server decodes the domain portion of a username login string when this command is enabled.

Use the **no** variant of this command to disable the specified domain style on the local RADIUS server.

Syntax

```
domain-style {suffix-atsign|ntdomain}
no domain-style {suffix-atsign|ntdomain}
```

Parameter	Description
`suffix-atsign`	Enable at sign "@" delimited suffix style, i.e. "user@domain".
`ntdomain`	Enable NT domain style, i.e. "domain\user".

Default This feature is disabled by default.

Mode RADIUS Server Configuration

Usage When both domain styles are enabled, the first domain style configured has the highest priority. A username login string is matched against the first domain style enabled. Then, if the username login string is not decoded, it is matched against the second domain style enabled.

Examples To enable NT domain style on the local RADIUS server, use the commands:

```
awplus# configure terminal
awplus(config)# radius-server local
awplus(config-radsrv)# domain-style ntdomain
```

To disable NT domain style on the local RADIUS server, use the commands:

```
awplus# configure terminal
awplus(config)# radius-server local
awplus(config-radsrv)# no domain-style ntdomain
```

Related Commands server enable

egress-vlan-id

Overview Use this command to configure the standard RADIUS attribute "Egress-VLANID (56)" for the local RADIUS Server user group.

Use the **no** variant of this command to remove the Egress-VLANID attribute from the local RADIUS server user group.

Syntax

```
egress-vlan-id <vid> [tagged|untagged]
no egress-vlan-id
```

Parameter	Description
<vid>	The VLAN identifier to be used for the Egress VLANID attribute, in the range 1 to 4094.
`tagged`	Set frames on the VLAN as tagged. This sets the tag indication field to indicate that all frames on this VLAN are tagged.
`untagged`	Set all frames on the VLAN as untagged. This sets the tag indication field to indicate that all frames on this VLAN are untagged.

Default By default, no Egress-VLANID attributes are configured.

Mode RADIUS Server Group Configuration

Examples To set the "Egress-VLANID" attribute for the *NormalUsers* local RADIUS server user group to VLAN identifier 200, with tagged frames, use the commands:

```
awplus# configure terminal
awplus(config)# radius-server local
awplus(config-radsrv)# group NormalUsers
awplus(config-radsrv-group)# egress-vlan-id 200 tagged
```

To remove the "Egress-VLANID" attribute for the *NormalUsers* local RADIUS server user group, use the commands:

```
awplus# configure terminal
awplus(config)# radius-server local
awplus(config-radsrv)# group NormalUsers
awplus(config-radsrv-group)# no egress-vlan-id
```

Related Commands attribute

egress-vlan-name

egress-vlan-name

Overview Use this command to configure the standard RADIUS attribute "Egress-VLAN-Name (58)" for the local RADIUS server user group.

Use the **no** variant of this command to remove the Egress-VLAN-Name attribute from the local RADIUS server user group.

Syntax

```
egress-vlan-name <vlan-name> [tagged|untagged]
no egress-vlan-name
```

Parameter	Description
<vlan-name>	The VLAN name to be configured as the Egress-VLAN-Name attribute.
`tagged`	Set frames on the VLAN as tagged. This sets the tag indication field to indicate that all frames on this VLAN are tagged.
`untagged`	Set all frames on the VLAN as untagged. This sets the tag indication field to indicate that all frames on this VLAN are untagged.

Default By default, no Egress-VLAN-Name attributes are configured.

Mode RADIUS Server Group Configuration

Examples To configure the "Egress-VLAN-Name" attribute for the RADIUS server user group *NormalUsers* with the VLAN name *vlan2* and all frames on this VLAN tagged, use the commands:

```
awplus# configure terminal
awplus(config)# radius-server local
awplus(config-radsrv)# group NormalUsers
awplus(config-radsrv-group)# egress-vlan-name vlan2 tagged
```

To delete the "Egress-VLAN-Name" attribute for the *NormalUsers* group, use the commands:

```
awplus# configure terminal
awplus(config)# radius-server local
awplus(config-radsrv)# group NormalUsers
awplus(config-radsrv-group)# no egress-vlan-name
```

Related Commands attribute

egress-vlan-id

group

Overview Use this command to create a local RADIUS server user group, and enter local RADIUS Server User Group Configuration mode.

Use the **no** variant of this command to delete the local RADIUS server user group.

Syntax

```
group <user-group-name>
no group <user-group-name>
```

Parameter	Description
<user-group-name>	User group name string.

Mode RADIUS Server Configuration

Examples The following command creates the user group NormalUsers.

```
awplus# configure terminal
awplus(config)# radius-server local
awplus(config-radsrv)# group NormalUsers
```

The following command deletes user group NormalUsers.

```
awplus# configure terminal
awplus(config)# radius-server local
awplus(config-radsrv)# no group NormalUsers
```

Related Commands

user (RADIUS server)

show radius local-server user

vlan (RADIUS server)

nas

Overview This command adds a client device (the Network Access Server or the NAS) to the list of devices that are able to send authentication requests to the local RADIUS server. The NAS is identified by its IP address and a shared secret (also referred to as a shared key) must be defined that the NAS will use to establish its identity.

Use the **no** variant of this command to remove a NAS client from the list of devices that are allowed to send authentication requests to the local RADIUS server.

Syntax

```
nas <ip-address> key <nas-keystring>
no nas <ip-address>
```

Parameter	Description
<ip-address>	RADIUS NAS IP address.
<nas-keystring>	NAS shared keystring.

Mode RADIUS Server Configuration

Examples The following commands add the NAS with an IP address of `192.168.1.2` to the list of clients that may send authentication requests to the local RADIUS server. Note the shared key that this NAS will use to establish its identify is `NAS_PASSWORD`.

```
awplus# configure terminal
awplus(config)# radius-server local
awplus(config-radsrv)# nas 192.168.1.2 key NAS_PASSWORD
```

The following commands remove the NAS with an IP address of `192.168.1.2` from the list of clients that are allowed to send authentication requests to the local RADIUS server:

```
awplus# configure terminal
awplus(config)# radius-server local
awplus(config-radsrv)# no nas 192.168.1.2
```

Related Commands show radius local-server nas

radius-secure-proxy local-server

Overview Use this command to enter the RadSecProxy local-server application configuration mode. This application allows remote RadSec clients to communicate with the local RADIUS server process via a secure (TLS) proxy.

Syntax

```
radius-secure-proxy local-server
```

Mode Global Configuration Mode

Example To change mode from User Exec mode to the RadSecProxy local-server configuration mode, use the commands:

```
awplus# configure terminal
awplus(config)# radius-secure-proxy local-server
awplus(config-radsecproxy-srv)#
```

Related Commands

client (radsecproxy-srv)

client name-check

client trustpoint

radius-server local

Overview Use this command to navigate to the Local RADIUS server configuration mode `(config-radsrv)` from the Global Configuration mode `(config)`.

Syntax

```
radius-server local
```

Mode Global Configuration

Example Local RADIUS Server commands are available from `config-radsrv` configuration mode. To change mode from User Exec mode to the Local RADIUS Server mode (config- radsrv), use the commands:

```
awplus# configure terminal
awplus(config)# radius-server local
awplus(config-radsrv)#
```

Output

```
awplus(config)#radius-server local
Creating Local CA repository.....OK
Enrolling Local System to local trustpoint..OK
awplus(config-radsrv)#
```

Related Commands

server enable

show radius local-server group

show radius local-server nas

show radius local-server statistics

show radius local-server user

server auth-port

Overview Use this command to change the UDP port number for local RADIUS server authentication.

Use the **no** variant of this command to reset the RADIUS server authentication port back to the default.

Syntax

```
server auth-port <1-65535>
no server auth-port
```

Parameter	Description
<1-65535>	UDP port number.

Default The default local RADIUS server UDP authentication port number is 1812.

Mode RADIUS Server Configuration

Examples The following commands set the RADIUS server authentication port to 10000.

```
awplus# configure terminal
awplus(config)# radius-server local
awplus(config-radsrv)# server auth-port 10000
```

The following commands reset the RADIUS server authentication port back to the default UDP port of 1812.

```
awplus# configure terminal
awplus(config)# radius-server local
awplus(config-radsrv)# no server auth-port
```

Related Commands server enable

show radius local-server statistics

server enable

Overview This command enables the local RADIUS server. The local RADIUS server feature is started immediately when this command is issued.

The **no** variant of this command disables local RADIUS server. When this command is issued, the local RADIUS server stops operating.

Syntax

```
server enable
no server enable
```

Default The local RADIUS server is disabled by default and must be enabled for use with this command.

Mode RADIUS Server Configuration

Examples To enable the local RADIUS server, use the following commands:

```
awplus# configure terminal
awplus(config)# radius-server local
awplus(config-radsrv)# server enable
```

To disable the local RADIUS server, use the command:

```
awplus# configure terminal
awplus(config)# radius-server local
awplus(config-radsrv)# no server enable
```

Related Commands server auth-port

show radius local-server statistics

show crypto pki certificates (deleted)

Overview This command is no longer available. Please use the following command instead:

```
show crypto pki certificates <trustpoint>
```

Note that “local” is a valid name for a trustpoint.

show crypto pki certificates local-radius-all-users (deleted)

Overview This command is no longer available because user certificates are not stored on the system; they are generated for export and then removed.

show crypto pki certificates user (deleted)

Overview This command is no longer available because user certificates are not stored on the system; they are generated for export and then removed.

show crypto pki trustpoints (deleted)

Overview This command is no longer available. Please use the following command instead:

```
show crypto pki trustpoint [<trustpoint>]
```

Note that “local” is a valid name for a trustpoint.

show radius local-server group

Overview Use this command to display information about the local RADIUS server user group.

For information on filtering and saving command output, see the "Getting Started with AlliedWare Plus" Feature Overview and Configuration Guide.

Syntax

```
show radius local-server group [<user-group-name>]
```

Parameter	Description
<user-group-name>	User group name string.

Mode User Exec and Privileged Exec

Example The following command displays Local RADIUS server user group information.

```
awplus# show radius local-server group
```

Output

Table 1: Example output from the **show radius local-server group** command

```
Group-Name          Vlan
-------------------------------------------------------------
NetworkOperators    ManagementNet
NormalUsers         CommonNet
```

Table 2: Parameters in the output of the **show radius local-server group** command

Parameter	Description
Group-Name	Group name.
Vlan	VLAN name assigned to the group.

Related Commands group

show radius local-server nas

Overview Use this command to display information about NAS (Network Access Servers) registered to the local RADIUS server.

For information on filtering and saving command output, see the "Getting Started with AlliedWare Plus" Feature Overview and Configuration Guide.

Syntax

```
show radius local-server nas [<ip-address>]
```

Parameter	Description
<ip-address>	Specify NAS IP address for show output.

Mode User Exec and Privileged Exec

Example The following command displays NAS information.

```
awplus# show radius local-server nas
```

Output

Table 3: Example output from the **show radius local-server nas** command

```
NAS-Address      Shared-Key
-----------------------------------------------------
127.0.0.1       awplus-local-radius-server
```

Table 4: Parameters in the output of the **show radius local-server nas** command

Parameter	Description
NAS-Address	IP address of NAS.
Shared-Key	Shared key used for RADIUS connection.

Related Commands nas

show radius local-server statistics

Overview Use this command to display statistics about the local RADIUS server.

For information on filtering and saving command output, see the "Getting Started with AlliedWare Plus" Feature Overview and Configuration Guide.

Syntax

```
show radius local-server statistics
```

Mode User Exec and Privileged Exec

Usage Both unknown usernames and invalid passwords will display as failed logins in the show output.

Example The following command displays Local RADIUS server statistics.

```
awplus# show radius local-server statistics
```

Output

Table 5: Example output from the **show radius local-server statistics** command

```
Server status  : Run (administrative status is enable)
Enabled methods: MAC EAP-MD5 EAP-TLS EAP-PEAP

Successes :1 Unknown NAS :0
Failed Logins :0 Invalid packet from NAS :0
Internal Error :0 Unknown Error :0

NAS : 127.0.0.1
Successes :0 Shared key mismatch :0
Failed Logins :0 Unknown RADIUS message :0
Unknown EAP message :0 Unknown EAP auth type :0
Corrupted packet :0

NAS : 192.168.1.61
Successes :0 Shared key mismatch :0
Failed Logins :0 Unknown RADIUS message :0
Unknown EAP message :0 Unknown EAP auth type :0
Corrupted packet :0

Username  Successes  Failures
a 1 0
admin 0 0
```

Related Commands

clear radius local-server statistics

radius-server local

server enable

server auth-port

show radius local-server user

Overview Use this command to display information about the local RADIUS server user.

For information on filtering and saving command output, see the "Getting Started with AlliedWare Plus" Feature Overview and Configuration Guide.

Syntax

```
show radius local-server user [<user-name>]
show radius local-server user <user-name> format csv
```

Parameter	Description
<user-name>	RADIUS user name. If no user name is specified, information for all users is displayed.
`format`	File format.
`csv`	Comma separated value format.

Mode User Exec and Privileged Exec

Examples The following command displays Local RADIUS server user information for user Tom.

```
awplus# show radius local-server user Tom
```

Table 6: Example output from the **show radius local-server user** command

```
User-Name   Password   Group                Vlan
-----------------------------------------------------------------
Tom         abcd       NetworkOperators     ManagementNet
```

The following command displays all Local RADIUS server information for all users.

```
awplus# show radius local-server user
```

The following command displays Local RADIUS server user information for Tom in CSV format.

```
awplus# show radius local-server user Tom format csv
```

Table 7: Example output from the **show radius local-server user csv** command

```
true,"NetworkOperators","Tom",
"abcd",0,2099/01/
01,1,"","","ManagementNet",false,3600,false,0,"",false,"
```

Table 8: Parameters in the output from the **show radius local-server user** command

Parameter	Description
`User-Name`	User name.
`Password`	User password.
`Group`	Group name assigned to the user.
`Vlan`	VLAN name assigned to the user.

Related Commands

group

user (RADIUS server)

user (RADIUS server)

Overview Use this command to register a user to the local RADIUS server.

Use the **no** variant of this command to delete a user from the local RADIUS server.

Syntax

```
user <radius-user-name> [encrypted] password <user-password>
[group <user-group>]
```

```
no user <radius-user-name>
```

Parameter	Description
<radius-user-name>	RADIUS user name. This can also be a MAC address in the IEEE standard format of `HH-HH-HH-HH-HH-HH` if you are configuring MAC authentication to use local RADIUS server.
`encrypted`	Specifies that the password is being entered in its encrypted form, so that it is not further encrypted. When creating a new user, enter the password in plaintext, and do not use the **encrypted** parameter. Use the **encrypted** parameter only when referring to a user that has previously been created. For instance, when adding an existing user from another RADIUS server, use the **encrypted** parameter, and enter the encrypted version of the password that appears in the output of **show** commands for the user.
<user-password>	User password. This can also be a MAC address in the IEEE standard format of `HH-HH-HH-HH-HH-HH` if you are configuring MAC authentication to use local RADIUS server.
`group`	Specify the group for the user.
<user-group>	User group name.

Mode RADIUS Server Configuration

Usage RADIUS user names cannot contain question mark (`?`), space ( ), or quote (“ “) characters. RADIUS user names containing the below characters cannot use certificate authentication:

```
/ \ '$ &()*;< > '|
```

Certificates cannot be created and exported for RADIUS user names that contain the above characters. We advise you to avoid using these characters in RADIUS user names if you need to use certificate authentication, because you will not be able to create and export certificates.

You also can use the IEEE standard format hexadecimal notation (`HH-HH-HH-HH-HH-HH`) to specify a supplicant MAC address to configure the user name and user password parameters to use local RADIUS server for MAC Authentication. See the AAA and Port_Authentication Feature Overview and Configuration_Guide for a sample MAC configuration. See also the command **user**

00-db-59-ab-70-37 password 00-db-59-ab-70-37 as shown in the command examples.

Examples

The following commands add user “Tom” to the local RADIUS server and sets his password to “QwerSD”.

```
awplus# configure terminal
awplus(config)# radius-server local
awplus(config-radsrv)# user Tom password QwerSD
```

The following commands add user “Tom” to the local RADIUS server user group “NormalUsers” and sets his password “QwerSD”.

```
awplus# configure terminal
awplus(config)# radius-server local
awplus(config-radsrv)# user Tom password QwerSD group
NormalUsers
```

The following commands remove user “Tom” from the local RADIUS server:

```
awplus# configure terminal
awplus(config)# radius-server local
awplus(config-radsrv)# no user Tom
```

The following commands add the supplicant MAC address 00-d0-59-ab-70-37 to the local RADIUS server:

```
awplus# configure terminal
awplus(config)# radius-server local
awplus(config-radsrv)# user 00-db-59-ab-70-37 password
00-db-59-ab-70-37
```

The following commands remove the supplicant MAC address 00-d0-59-ab-70-37 from the local RADIUS server:

```
awplus# configure terminal
awplus(config)# radius-server local
awplus(config-radsrv)# no user 00-db-59-ab-70-37
```

Related Commands

group

show radius local-server user

vlan (RADIUS server)

Overview Use this command to set the VLAN ID or name for the local RADIUS server user group. The VLAN information is used for authentication with the dynamic VLAN feature.

Use the **no** variant of this command to clear the VLAN ID or VLAN name for the local RADIUS server user group.

Syntax

```
vlan {<vid>|<vlan-name>}
no vlan
```

Parameter	Description
<vid>	VLAN ID.
<vlan-name>	VLAN name.

Default VLAN information is not set by default.

Mode RADIUS Server Group Configuration

Examples The following commands set VLAN ID 200 to the group named *NormalUsers*:

```
awplus# configure terminal
awplus(config)# radius-server local
awplus(config-radsrv)# group NormalUsers
awplus(config-radsrv-group)# vlan 200
```

The following commands remove VLAN ID 200 from the group named *NormalUsers*:

```
awplus# configure terminal
awplus(config)# radius-server local
awplus(config-radsrv)# group NormalUsers
awplus(config-radsrv-group)# no vlan
```

Related Commands group

show radius local-server user

43 Public Key Infrastructure Commands

Introduction

Overview This chapter provides an alphabetical reference of commands used to configure the Public Key Infrastructure (PKI) capabilities on an AlliedWare Plus device. For more information about PKI, see the Public Key Infrastructure (PKI) Feature Overview and Configuration Guide.

Command List

- "crypto key generate rsa" on page 2000
- "crypto key zeroize" on page 2001
- "crypto pki authenticate" on page 2002
- "crypto pki enroll" on page 2003
- "crypto pki enroll user" on page 2004
- "crypto pki export pem" on page 2006
- "crypto pki export pkcs12" on page 2007
- "crypto pki import pem" on page 2009
- "crypto pki import pkcs12" on page 2011
- "crypto pki trustpoint" on page 2012
- "enrollment (trustpoint configuration mode)" on page 2013
- "fingerprint (trustpoint configuration mode)" on page 2014
- "no crypto pki certificate" on page 2016
- "rsakeypair (trustpoint configuration mode)" on page 2017
- "show crypto key mypubkey rsa" on page 2018
- "show crypto pki certificates" on page 2019
- "show crypto pki enrollment user" on page 2021
- "show crypto pki trustpoint" on page 2022
- "subject-name (trustpoint configuration)" on page 2023

crypto key generate rsa

Overview Use this command to generate a cryptographic public/private key pair for the Rivest-Shamir-Adleman (RSA) encryption algorithm.

Syntax

```
crypto key generate rsa [label <keylabel>] [<1024-4096>]
```

Parameter	Description
<keylabel>	The name of the key to be created. The name must start with an alphanumeric character, and may only contain alphanumeric characters, underscores, dashes, or periods. The maximum length of the name is 63 characters. If no label is specified the default value “server-default” is used.
<1024-4096>	The bit length for the key. If no bit length is specified the default of 2048 is used.

Mode Privileged Exec

Usage The generated key may be used for multiple server certificates in the system. A key is referenced by its label. A bit length between 1024 and 4096 bits may be specified. Larger bit lengths are more secure, but require more computation time.

The specified key must not already exist.

Example To create a key with the label "example-server-key" and a bit length of 2048, use the commands:

```
awplus> enable
awplus# crypto key generate rsa label example-server-key 2048
```

Related Commands

crypto key zeroize

rsakeypair (trustpoint configuration mode)

show crypto key mypubkey rsa

crypto key zeroize

Overview Use this command to delete one or all cryptographic public/private key pairs.

Syntax

```
crypto key zeroize rsa <keylabel>
crypto key zeroize all
```

Parameter	Description
`rsa <keylabel>`	Delete a single key pair for the Rivest-Shamir-Adleman (RSA) encryption algorithm.
`all`	Delete all keys.

Mode Privileged Exec

Usage Note that this command has the same effect as using the **delete** command (it deletes the file from Flash memory but does not overwrite it with zeros).

The specified key must exist but must not be in use for any existing server certificates.

A key may not be deleted if it is associated with the server certificate or server certificate signing request for an existing trustpoint. To remove a server certificate so that the key may be deleted, use the **no crypto pki enroll** command to de-enroll the server.

Example To delete an RSA key named "example-server-key", use the following command:

```
awplus# crypto key zeroize rsa example-server-key
```

Related Commands

crypto key generate rsa

show crypto key mypubkey rsa

crypto pki authenticate

Overview Use this command to authenticate a trustpoint by generating or importing the root CA certificate. This must be done before the server can be enrolled to the trustpoint.

Syntax

```
crypto pki authenticate <trustpoint>
```

Parameter	Description
<trustpoint>	The name of the trustpoint to be authenticated.

Mode Privileged Exec

Usage If the trustpoint's **enrollment** setting is "selfsigned", then this command causes a private key to be generated for the root CA, and a self-signed certificate to be generated based on that key.

If the trustpoint's **enrollment** setting is "terminal", then this command prompts the user to paste a certificate Privacy Enhanced Mail (PEM) file at the CLI terminal. If the certificate is a valid selfsigned CA certificate, then it will be stored as the trustpoint's root CA certificate.

The specified trustpoint must already exist, and its enrollment mode must have been defined.

Example To show the **enrollment** setting of a trustpoint named "example" and then generate a certificate from it, use the commands:

```
awplus> enable
awplus# configure terminal
awplus(config)# crypto pki trustpoint example
awplus(ca-trustpoint)# enrollment selfsigned
awplus(config)# exit
awplus# exit
awplus# crypto pki authenticate example
```

Related Commands

crypto pki import pem

crypto pki trustpoint

enrollment (trustpoint configuration mode)

crypto pki enroll

Overview Use this command to enroll the local server to the specified trustpoint.

Use the **no** variant of this command to de-enroll the server by removing its certificate

Syntax

```
crypto pki enroll <trustpoint>
no crypto pki enroll <trustpoint>
```

Parameter	Description
<trustpoint>	The name of the trustpoint to be enrolled

Mode Privileged Exec

Usage For the local server, "enrollment" is the process of creating of a certificate for the server that has been signed by a CA associated with the trustpoint. The public portion of the RSA key pair specified using the rsakeypair parameter for the trustpoint will be included in the server certificate.

If the trustpoint represents a locally self-signed certificate authority, then this command results in the direct generation of the server certificate, signed by the root CA for the trustpoint.

If the trustpoint represents an external certificate authority, then this command results in the generation of a Certificate Signing Request (CSR) file, which is displayed at the terminal in Privacy-Enhanced Mail (PEM) format, suitable for copying and pasting into a file or message. The CSR must be sent to the external CA for processing. When the CA replies with the signed certificate, that certificate should be imported using the crypto pki import pem command, to complete the enrollment process.

The specified trustpoint must already exist, and it must already be authenticated.

Example To enroll the local server with the trustpoint "example", use the following commands:

```
awplus> enable
awplus# crypto pki enroll example
```

Related Commands

crypto pki enroll user

crypto pki import pem

crypto pki trustpoint

enrollment (trustpoint configuration mode)

crypto pki enroll user

Overview Use this command to enroll a single RADIUS user or all RADIUS users to the specified trustpoint.

Use the **no** variant of this command to remove the PKCS#12 file from the system. Note that the PKCS#12 files are generated in a temporary (volatile) file system, so a system restart also results in removal of all of the files.

Syntax

```
crypto pki enroll <trustpoint>
{user <username>|local-radius-all-users}
```

```
no crypto pki enroll <trustpoint>
{user <username>|local-radius-all-users}
```

Parameter	Description
<trustpoint>	The name of the trustpoint to which users are to be enrolled.
<username>	The name of the user to enroll to the trustpoint.

Mode Privileged Exec

Usage For RADIUS users, “enrollment” is the process of generating a private key and a corresponding client certificate for each user, with the certificate signed by the root CA for the trustpoint. The resulting certificates may be exported to client devices, for use with PEAP or EAP-TLS authentication with the local RADIUS server.

The specified trustpoint must represent a locally self-signed certificate authority.

The private key and certificate are packaged into a PKCS#12-formatted file, suitable for export using the **crypto pki export pkcs12** command. The private key is encrypted for security, with a passphrase that is entered at the command line. The passphrase is required when the PKCS#12 file is imported on the client system. The passphrase is not stored anywhere on the device, so users are responsible for remembering it until the export-import process is complete.

If **local-radius-all-users** is specified instead of an individual user, then keys and certificates for all RADIUS users will be generated at once. All the keys will be encrypted using the same passphrase.

The specified trustpoint must already exist, it must represent a locally self-signed CA, and it must already have been authenticated.

Example To enroll the user “example-user” with the trustpoint “example”, use the following commands:

```
awplus> enable
```

```
awplus# crypto pki enroll example user example-user
```

To enroll all local RADIUS users with the trustpoint “example”, use the following commands:

```
awplus> enable
awplus# crypto pki enroll example local-radius-all-users
```

Related Commands

crypto pki export pkcs12

crypto pki trustpoint

crypto pki export pem

Overview Use this command to export the root CA certificate for the given trustpoint to a file in Privacy-Enhanced Mail (PEM) format. The file may be transferred to the specified destination URL, or displayed at the terminal.

Syntax

```
crypto pki export <trustpoint> pem [terminal|<url>]
```

Parameter	Description
<trustpoint>	The name of the trustpoint for which the root CA certificate is tobe exported.
terminal	Display the PEM file to the terminal.
<url>	Transfer the PEM file to the specified URL.

Default The PEM will be displayed to the terminal by default.

Mode Privileged Exec

Usage The specified trustpoint must already exist, and it must already be authenticated.

Example To display the PEM file for the trustpoint “example” to the terminal, use the following commands:

```
awplus> enable
awplus# crypto pki export example pem terminal
```

To export the PEM file “example.pem” for the trustpoint “example” to the URL “tftp://server_a/”, use the following commands:

```
awplus> enable
awplus# crypto pki export example pem
tftp://server_a/example.pem
```

Related Commands

crypto pki authenticate

crypto pki import pem

crypto pki trustpoint

crypto pki export pkcs12

Overview Use this command to export a certificate and private key for an entity in a trustpoint to a file in PKCS#12 format at the specified URL. The private key is encrypted with a passphrase for security.

Syntax
```
crypto pki export <trustpoint> pkcs12 {ca|server|<username>}
<url>
```

Parameter	Description
<trustpoint>	The name of the trustpoint for which the certificate and key are tobe exported.
ca	If this option is specified, the command exports the root CA certificate and corresponding key.
server	If this option is specified, the command exports the server certificate and corresponding key.
<username>	If a RADIUS username is specified, the command exports the PKCS#12 file that was previously generated using the crypto pki enroll user command. To avoid ambiguity with keywords, the username may be prefixed by the string “user:”.
<url>	The destination URL for the PKCS#12 file. The format of the URLis the same as any valid destination for a file copy command.

Mode Privileged Exec

Usage If the **ca** option is specified, this command exports the root CA certificate and the corresponding private key, if the trustpoint has been authenticated as a locally selfsigned CA. (If the trustpoint represents an external CA, then there is no private key on the system corresponding to the root CA certificate. Use the **crypto pki export pem** file to export the certificate by itself.) The command prompts for a passphrase to encrypt the private key.

If the **server** option is specified, this command exports the server certificate and the corresponding private key, if the server has been enrolled to the trustpoint. The command prompts for a passphrase to encrypt the private key.

If a RADIUS username is specified, this command exports the PKCS#12 file that was generated using the **crypto pki enroll user** command. (The key within the file was already encrypted as part of the user enrollment process.)

In the event that there is a RADIUS user named “ca” or “server”, enter “user:ca” or “user:server” as the username.

The key and certificate must already exist.

Example To export the PKCS#12 file “example.pk12” for the trustpoint “example” to the URL “tftp://backup/”, use the following commands:

```
awplus> enable

awplus# crypto pki export example pkcs12 ca
tftp://backup/example.pk12
```

Related Commands

crypto pki enroll user

crypto pki export pem

crypto pki import pkcs12

crypto pki import pem

Overview This command imports a certificate for the given trustpoint from a file in Privacy-Enhanced Mail (PEM) format. The file may be transferred from the specified destination URL, or entered at the terminal.

Syntax

```
crypto pki import <trustpoint> pem [terminal|<url>]
```

Parameter	Description
<trustpoint>	The name of the trustpoint for which the root CA certificate is to be imported.
terminal	Optional parameter, If specified, the command prompts the user to enter (or paste) the PEM file at the terminal. If parameter is specified terminal is assumed by default.
<url>	Optional parameter, If specified, the PEM file is transferred from the specified URL

Default The PEM will be imported from the terminal by default.

Mode Privileged Exec

Usage The command is generally used for trustpoints representing external certificate authorities. It accepts root CA certificates, intermediate CA certificates, and server certificates. The system automatically detects the certificate type upon import.

Using this command to import root CA certificates at the terminal is identical to the functionality provided by the crypto pki authenticate command, for external certificate authorities. The imported certificate is validated to ensure it is a proper CA certificate.

Intermediate CA certificates are validated to ensure they are proper CA certificates, and that the issuer chain ends in a root CA certificate already installed for the trustpoint. If there is no root CA certificate for the trustpoint (i.e., if the trustpoint is unauthenticated) then intermediate CA certificates may not be imported.

Server certificates are validated to ensure that the issuer chain ends in a root CA certificate already installed for the trustpoint. If there is no root CA certificate for the trustpoint (i.e., if the trustpoint is unauthenticated) then server certificates may not be imported.

The specified trustpoint must already exist. If the imported certificate is self-signed, then no certificates may exist for the trustpoint. Otherwise, the issuer's certificate must already be present for the trustpoint.

Example To import the PEM file for the trustpoint "example" from the terminal, use the following commands:

```
awplus> enable
awplus# crypto pki import example pem
```

To import the PEM file for the trustpoint “example” from the URL “tftp://server_a/”, use the following commands:

```
awplus> enable

awplus# crypto pki import example pem
tftp://server_a/example.pem
```

Related Commands

crypto pki authenticate

crypto pki export pem

crypto pki trustpoint

crypto pki import pkcs12

Overview This command imports a certificate and private key for an entity in a trustpoint from a file in PKCS#12 format at the specified URL. The command prompts for a passphrase to decrypt the private key within the file.

Syntax

```
crypto pki import <trustpoint> pkcs12 {ca|server} <url>
```

Parameter	Description
<trustpoint>	The name of the trustpoint for which the certificate and key are to be imported.
ca	If this option is specified, the command imports the root CA certificate and corresponding key.
server	If this option is specified, the command imports the server certificate and corresponding key.
<url>	The source URL for the PKCS#12 file. The format of the URLis the same as any valid destination for a file copy command.

Mode Privileged Exec

Usage If the **ca** option is specified, this command imports the root CA certificate and the corresponding private key. This is only valid if the root CA certificate does not already exist for the trustpoint (i.e., if the trustpoint is unauthenticated).

If the **server** option is specified, this command imports the server certificate and the corresponding private key. The imported private key is given a new unique label of the form "localN", where N is a non-negative integer. This operation is only valid if the server certificate does not already exist for the trustpoint (i.e., if the server is not enrolled to the trustpoint).

PKCS#12 files for RADIUS users may not be imported with this command. (There is no value in doing so, as the files are not needed on the local system.)

The specified trustpoint must already exist. The key and certificate must not already exist.

Example To import the PKCS#12 file "example.pk12" for the trustpoint "example" to the URL "tftp://backup/", use the following commands:

```
awplus> enable
awplus# crypto pki import example pkcs12 ca
tftp://backup/example.pk12
```

Related Commands

crypto pki export pkcs12

crypto pki import pem

crypto pki trustpoint

Overview Use this command to declare the named trustpoint and enter trustpoint configuration mode.

Use the **no** variant of this command to destroy the trustpoint.

Syntax

```
crypto pki trustpoint <trustpoint>
no crypto pki trustpoint <trustpoint>
```

Parameter	Description
<trustpoint>	The name of the trustpoint. The name must start with an alphanumeric character, and may only contain alphanumeric characters, underscores, dashes, or periods. The maximum length of the name is 63 characters.

Mode Global Configuration

Usage If the trustpoint did not previously exist, it is created as a new trustpoint. The trustpoint will be empty (unauthenticated) unless the name “local” is selected, in which case the system will automatically authenticate the trustpoint as a local self-signed certificate authority.

The **no** variant of this command destroys the trustpoint by removing all CA and server certificates associated with the trustpoint, as well as the private key associated with the root certificate (if the root certificate was locally self-signed). This is a destructive and irreversible operation, so this command should be used with caution.

Example To configure a trustpoint named “example”, use the following commands:

```
awplus> enable
awplus# configure terminal
awplus(config)# crypto pki trustpoint example
```

Related Commands

show crypto pki certificates

show crypto pki trustpoint

enrollment (trustpoint configuration mode)

Overview Use this command to declare how certificates will be added to the system for the current trustpoint.

Syntax

```
enrollment {selfsigned|terminal}
```

Parameter	Description
`selfsigned`	Sets the enrollment mode for the current trustpoint to selfsigned.
`terminal`	Sets the enrollment mode for the current trustpoint to terminal.

Mode Trustpoint Configuration

Usage If the enrollment is set to **selfsigned**, then the system will generate a root CA certificate and its associated key when the **crypto pki authenticate** command is issued. It will generate a server certificate (signed by the root CA certificate) when the **crypto pki enroll** command is issued.

If the enrollment is set to **terminal**, then the system will prompt the user to paste the root CA certificate Privacy Enhanced Mail (PEM) file at the terminal, when the **crypto pki authenticate** command is issued. It will create a Certificate Signing Request (CSR) file for the local server when the **crypto pki enroll** command is issued. The server certificate received from the external CA should be imported using the **crypto pki import pem** command.

The trustpoint named “local” may only use the **selfsigned** enrollment setting.

If no enrollment mode is specified, the **crypto pki authenticate** command will fail for the trustpoint.

Example To configure the trustpoint named "example" and set its enrollment to **selfsigned**, use the following commands:

```
awplus> enable
awplus# configure terminal
awplus(config)# crypto pki trustpoint example
awplus(ca-trustpoint)# enrollment selfsigned
```

Related Commands crypto pki enroll

fingerprint (trustpoint configuration mode)

Overview Use this command to declare that certificates with the specified fingerprint should be automatically accepted, when importing certificates from an external certificate authority. This can affect the behavior of the **crypto pki authenticate** and **crypto pki import pem** commands.

Use the **no** variant of this command to remove the specified fingerprint from the pre-accepted list.

Syntax

```
fingerprint <word>
no fingerprint <word>
```

Parameter	Description
<word>	The fingerprint as a series of 40 hexadecimal characters, optionally separated into multiple character strings.

Default By default, no fingerprints are pre-accepted for the trustpoint.

Mode Trustpoint Configuration

Usage Specifying a fingerprint adds it to a list of pre-accepted fingerprints for the trustpoint. When a certificate is imported, if it matches any of the pre-accepted values, then it will be saved in the system automatically. If the imported certificate's fingerprint does not match any pre-accepted value, then the user will be prompted to verify the certificate contents and fingerprint visually.

This command is useful when certificates from an external certificate authority are being transmitted over an insecure channel. If the certificate fingerprint is delivered via a separate messaging channel, then pre-entering the fingerprint value via cut-and-paste may be less errorprone than attempting to verify the fingerprint value visually.

The fingerprint is a series of 40 hexadecimal characters. It may be entered as a continuous string, or as a series of up to multiple strings separated by spaces. The input format is flexible because different certificate authorities may provide the fingerprint string in different formats.

Example To configure a fingerprint "5A81D34C 759CC4DA CFCA9F65 0303AD83 410B03AF" for the trustpoint named "example", use the following commands:

```
awplus> enable
awplus# configure terminal
awplus(config)# crypto pki trustpoint example
awplus(ca-trustpoint)# fingerprint 5A81D34C 759CC4DA CFCA9F65
0303AD83 410B03AF
```

Related Commands crypto pki authenticate

crypto pki import pem

no crypto pki certificate

Overview Use this command to delete a certificate with the specified fingerprint from the specified trustpoint.

Syntax

```
no crypto pki certificate <trustpoint> <word>
```

Parameter	Description
<trustpoint>	The name of the trustpoint.
<word>	The fingerprint as a series of 40 hexadecimal characters, optionally separated into multiple character strings.

Default By default, no fingerprints are pre-accepted for the trustpoint.

Mode Privileged Exec

Usage The fingerprint can be found in the output of the **show crypto pki certificates** command. If there are dependent certificates in the trustpoint (i.e., if other certificates were signed by the specified certificate), the command will be rejected.

If the specified certificate is the root CA certificate and the trustpoint represents a locally selfsigned CA, then the corresponding private key is also deleted from the system. Deleting the root CA certificate effectively resets the trustpoint to an unauthenticated state.

Example To delete a certificate with the fingerprint "594EDEF9 C7C4308C 36D408E0 77E784F0 A59E8792" from the trustpoint “example”, use the following commands:

```
awplus> enable
awplus# no crypto pki certificate example
594EDEF9 C7C4308C 36D408E0 77E784F0 A59E8792
```

Related Commands no crypto pki trustpoint

show crypto pki certificates

rsakeypair (trustpoint configuration mode)

Overview Use this command to declare which RSA key pair should be used to enroll the local server with the trustpoint. Note that this defines the key pair used with the server certificate, not the key pair used with the root CA certificate.

Use the **no** variant of this command to restore the default value, “server-default”.

Syntax

```
rsakeypair <keylabel> [<1024-4096>]
no rsakeypair
```

Parameter	Description
<keylabel>	The key to be used with the server certificate for this trustpoint. The name must start with an alphanumeric character, and may only contain alphanumeric characters, underscores, dashes, or periods. The maximum length of the name is 63 characters.
<1024-4096>	The bit length for the key, to be used if the key is implicitly generated during server enrollment.

Default The default value for **keylabel** is “server-default”.

The default value for the key bit length is 2048.

Mode Trustpoint Configuration

Usage If the label specified does not refer to an existing key created by the **crypto key generate rsa** command, the key will be implicitly generated when the **crypto pki enroll** command is issued to generate the server certificate or the server certificate signing request. The optional numeric parameter defines the bit length for the key, and is only applicable for keys that are implicitly created during enrollment.

This command does not affect server certificates or server certificate signing requests that have already been generated. The trustpoint’s server certificate is set to use whatever key pair was specified for the trustpoint at the time the **crypto pki enroll** command is issued.

The default key pair is “server-default”. The default bit length is 2048 bits.

Example To configure trustpoint "example" to use the key pair "example-server-key" with a bit length of 2048, use the following commands:

```
awplus> enable
awplus# configure terminal
awplus(config)# crypto pki trustpoint example
awplus(ca-trustpoint)# rsakeypair example-server-key 2048
```

Related Commands crypto key generate rsa

show crypto key mypubkey rsa

Overview Use this command to display information about the specified Rivest-Shamir-Adleman encryption key.

Syntax

```
show crypto key mypubkey rsa [<keylabel>]
```

Parameter	Description
<keylabel>	The name of the key to be shown, if specified.

Default By default, all keys will be shown.

Mode Privileged Exec

Usage If no key label is specified, information about all keys is shown. The command displays the bit length of the key, a key fingerprint (a hash of the key contents to help uniquely identify a key), and a list of trustpoints in which the server certificate is using the key.

The specified keys must exist.

Example To show all keys, use the following commands:

```
awplus> enable
awplus# show crypto key mypubkey rsa
```

Output Figure 43-1: Example output from **show crypto key mypubkey rsa**

```
awplus#show crypto key mypubkey rsa
--------------------
RSA Key Pair "example-server-key":
   Key size    : 2048 bits
   Fingerprint : 1A605D73 C2274CB7 853886B3 1C802FC6 7CDE45FB
   Trustpoints : example
--------------------
RSA Key Pair "server-default":
   Key size    : 2048 bits
   Fingerprint : 34AC4D2D 5249A168 29D426A3 434FFC59 C4A19901
   Trustpoints : local
```

Related Commands crypto key generate rsa

show crypto pki certificates

Overview Use this command to display information about existing certificates for the specified trustpoint.

Syntax

```
show crypto pki certificates [<trustpoint>]
```

Parameter	Description
<trustpoint>	The trustpoint for which the certificates are to be shown.

Default By default, the certificates for all trustpoints are shown.

Mode Privileged Exec

Usage If no trustpoint is specified, certificates for all trustpoints are shown. The command displays the certificates organized into certificate chains. It starts with the server certificate and then displays its issuer, and continues up the issuer chain until the root CA certificate is reached.

For each certificate, the command displays the certificate type, the subject's distinguished name (the entity identified by the certificate), the issuer's distinguished name (the entity that signed the certificate), the validity dates for the certificate, and the fingerprint of the certificate. The fingerprint is a cryptographic hash of the certificate contents that uniquely identifies the certificate.

The specified trustpoints must already exist.

Example To show the certificates for the trustpoint "example", use the following command:

```
awplus> enable
awplus# show crypto pki certificates example
```

Output Figure 43-2: Example output from **show crypto pki certificates**

```
awplus>enable
awplus#show crypto pki certificates example
--------------------
Trustpoint "example" Certificate Chain
--------------------
Server certificate
   Subject     : /O=local/CN=local.loc.lc
   Issuer      : /C=NZ/CN=local_Signing_CA
   Valid From  : Nov 11 15:35:21 2015 GMT
   Valid To    : Aug 31 15:35:21 2018 GMT
   Fingerprint : 5A81D34C 759CC4DA CFCA9F65 0303AD83 410B03AF
Intermediate CA certificate
   Subject     : /C=NZ/CN=example_Signing_CA
   Issuer      : /C=NZ/CN=example_Root_CA
   Valid From  : Sep 3 18:45:01 2015 GMT
   Valid To    : Oct 10 18:45:01 2020 GMT
   Fingerprint : AE2D5850 9867D258 ABBEE95E 2E0E3D81 60714920
Imported root certificate
   Subject     : /C=NZ/CN=example_Root_CA
   Issuer      : /C=NZ/CN=example_Root_CA
   Valid From  : Jul 23 18:12:10 2015 GMT
   Valid To    : May 12 18:12:10 2025 GMT
   Fingerprint : 594EDEF9 C7C4308C 36D408E0 77E784F0 A59E8792
```

Related Commands crypto pki trustpoint

show crypto pki enrollment user

Overview Use this command to display a list of trustpoints for which RADIUS user enrollments have been performed, using the **crypto pki enroll user** command. This indicates that PKCS#12 files for the user are available for export for the given trustpoints, using the **crypto pki export pkcs12** command.

Syntax

```
crypto pki enrollment user <username>
```

Parameter	Description
<username>	The user for which enrollments are to be shown.

Mode Privileged Exec

Example To show the list of trustpoints to which user “exampleuser1” is enrolled, use the following commands:

```
awplus> enable
awplus(config)# show crypto pki enrollment user exampleuser1
```

Output Figure 43-3: Example output from **show crypto pki enrollment user**

```
awplus> enable
awplus# show crypto pki enrollment user exampleuser1
User "exampleuser1" is enrolled to the following trustpoints:
local,example
```

Related Commands

crypto pki enroll user

crypto pki export pkcs12

show crypto pki trustpoint

Overview Use this command to display information about the specified trustpoint.

Syntax

```
show crypto pki trustpoint [<trustpoint>]
```

Parameter	Description
<trustpoint>	The name of the trustpoint to be shown

Default By default, all trustpoints are shown.

Mode Privileged Exec

Usage If no trustpoint is specified, information about all trustpoints is shown. The command displays the authentication status of the trustpoint, the fingerprint of the root CA certificate (if it exists), the enrollment status of the local server with the trustpoint, a list of any applications that are configured to use the trustpoint, and the trustpoint parameters that were configured from trustpoint-configuration mode.

The specified trustpoints must already exist.

Example To show the details of the trustpoint “example”, use the following commands:

```
awplus> enable
awplus# show crypto pki trustpoint example
```

Output Figure 43-4: Example output from **show crypto pki trustpoint**

```
awplus> enable
awplus# show crypto pki trustpoint example
--------------------
Trustpoint "example"
   Type             : Self-signed certificate authority
   Root Certificate: 50C1856B EEC7555A 0F3A61F6 690D9463 67DF74D1
   Local Server     : The server is enrolled to this trustpoint.
   Server Key       : example-server-key
   Applications     : RADIUS

Authentication and Enrollment Parameters:
   Enrollment       : selfsigned
   RSA Key Pair     : example-server-key (2048 bits)
--------------------
```

Related Commands

crypto pki trustpoint

show crypto pki certificates

subject-name (trustpoint configuration)

Overview Use this command to specify the distinguished name string that should be used for the subject field in the server certificate, when enrolling the server (generating the server certificate or server certificate signing request).

Syntax

```
subject-name <word>
```

Parameter	Description
<word>	Specify the subject name as a distinguished name string. Complex strings (e.g., strings containing spaces) should be surrounded with double-quote characters.

Default If no subject name is specified for the trustpoint, then the system automatically builds a name of the form "/O=AlliedWare Plus/CN=xxxx.yyyy.zzz", where "xxxx" is the hostname of the system and "yyyy.zzz" is the default search domain for the system.

Mode Trustpoint Configuration

Usage The subject name is specified as a variable number of fields, where each field begins with a forward-slash character ("/"). Each field is of the form "XX=value", where "XX" is the abbreviation of the node type in the tree.

Common values include:

- "C" (country),
- "ST" (state),
- "L" (locality),
- "O" (organization),
- "OU" (organizational unit), and
- "CN" (common name).

Of these fields, "CN" is usually the most important.

NOTE: *For a server certificate, many applications require that the network name of the server matches the common name in the server's certificate.*

Example To configure the trustpoint named "example" and set its subject name, use the following commands:

```
awplus> enable
awplus# configure terminal
awplus(config)# crypto pki trustpoint example
awplus(ca-trustpoint)# subject-name "/O=My
Company/CN=192.168.1.1
```

Related Commands crypto pki enroll

44 TACACS+ Commands

Introduction

Overview This chapter provides an alphabetical reference for commands used to configure the device to use TACACS+ servers. For more information about TACACS+, see the TACACS+ Feature Overview and Configuration Guide.

Command List

- "authorization commands" on page 2026
- "aaa authorization commands" on page 2028
- "aaa authorization config-commands" on page 2030
- "ip tacacs source-interface" on page 2031
- "show tacacs+" on page 2032
- "tacacs-server host" on page 2034
- "tacacs-server key" on page 2036
- "tacacs-server timeout" on page 2037

authorization commands

Overview This command applies a command authorization method list, defined using the aaa authorization commands command, to console and VTY lines.

Use the **no** variant of this command to reset the command authorization configuration on the console and VTY lines.

Syntax

```
authorization commands <privilege-level> {default|<list-name>}
no authorization commands <privilege-level>
```

Parameter	Description
<privilege-level>	The privilege level of the set of commands the method list will be applied to. AlliedWare Plus defines three sets of commands, that are indexed by a level value: **Level = 1**: All commands that can be accessed by a user with privilege level between 1 and 6 inclusive **Level = 7:** All commands that can be accessed by a user with privilege level between 7 and 14 inclusive **Level = 15**: All commands that can be accessed by a user with privilege level 15
`default`	Configure the default authorization commands method list.
<list-name>	Configure a named authorization commands method list

Default The **default** method list is applied to each console and VTY line by default.

Mode Line Configuration

Usage If the specified method list does not exist users will not be enable to execute any commands in the specified method list on the specified VTY lines.

Example To apply the TAC15 command authorization method list with privilege level 15 to VTY lines 0 to 5, use the following commands:

```
awplus# configure terminal
awplus(config)# line vty 0 5
awplus(config-line)# authorization commands 15 TAC15
```

To reset the command authorization configuration with privilege level 15 on VTY lines 0 to 5, use the following commands:

```
awplus# configure terminal
awplus(config)# line vty 0 5
awplus(config-line)# no authorization commands 15
```

Related Commands aaa authorization commands

aaa authorization config-commands

tacacs-server host

Command changes

Version 5.4.6-2.1: command added

aaa authorization commands

Overview This command configures a method list for commands authorization that can be applied to console or VTY lines. When command authorization is enabled for a privilege level, only authorized users can executed commands in that privilege level.

Use the **no** variant of this command to remove a named method list or disable the default method list for a privilege level.

Syntax

```
aaa authorization commands <privilege-level>
{default|<list-name>} group tacac+ [none]
```

```
no aaa authorization commands <privilege-level>
{default|<list-name>}
```

Parameter	Description
<privilege-level>	The privilege level of the set of commands the method list will be applied to. AlliedWare Plus defines three sets of commands, that are indexed by a level value: **Level = 1**: All commands that can be accessed by a user with privilege level between 1 and 6 inclusive **Level = 7:** All commands that can be accessed by a user with privilege level between 7 and 14 inclusive **Level = 15**: All commands that can be accessed by a user with privilege level 15
`group`	Specify the server group where authorization messages are sent. Only the `tacacs+` group is available for this command.
`tacac+`	Use all TACACS+ servers configured by the tacacs-server host command.
`default`	Configure the default authorization commands method list.
<list-name>	Configure a named authorization commands method list
`none`	If specified, this provides a local fallback to command authorization so that if authorization servers become unavailable then the device will accept all commands normally allowed for the privilege level of the user.

Mode Global Configuration

Usage TACACS+ command authorization provides centralized control of the commands available to a user of an AlliedWare Plus device. Once enabled:

- The command string and username are encrypted and sent to the first available configured TACACS+ server (the first server configured) for authorization.

- The TACACS+ server decides if the user is authorized to execute the command and returns the decision to the AlliedWare Plus device.
- Depending on this decision the device will then either execute the command or notify the user that authorization has failed.

If multiple TACACS+ servers are configured, and the first server is unreachable or does not respond, the other servers will be queried, in turn, for an authorization decision. If all servers are unreachable and a local fallback has been configured, with the **none** parameter, then commands are authorized based on the user's privilege level; the same behavior as if command authorization had not been configured. If, however, the local fallback is not configured and all servers become unreachable then all commands except **logout**, **exit**, and **quit** will be denied.

The **default** method list is defined with a local fallback unless configured differently using this command.

Example To configure a commands authorization method list, named TAC15, using all TACACS+ servers to authorize commands for privilege level 15, with a local fallback, use the following commands:

```
awplus# configure terminal
awplus(config)# aaa authorization commands 15 TAC15 group tacacs+ none
```

To configure the default method list to authorize commands for privilege level 7, with no local fallback, use the following commands:

```
awplus# configure terminal
awplus(config)# aaa authorization commands 7 default group tacacs+
```

To remove the authorization method list TAC15, use the following commands:

```
awplus# configure terminal
awplus(config)# no aaa authorization commands 15 TAC15
```

Related Commands

aaa authorization config-commands

authorization commands

tacacs-server host

Command changes Version 5.4.6-2.1: command added

aaa authorization config-commands

Overview Use this command to enable command authorization on configuration mode commands. By default, command authorization applies to commands in exec mode only.

Use the **no** variant of this command to disable command authorization on configuration mode commands.

Syntax

```
aaa authorization config-commands
no aaa authorization config-commands
```

Default By default, command authorization is disabled on configuration mode commands.

Mode Global Configuration

Usage If authorization of configuration mode commands is not enabled then all configuration commands are accepted by default, including command authorization commands.

NOTE: *Authorization of configuration commands is required for a secure TACACS+ command authorization configuration as it prevents the feature from being disabled to gain access to unauthorized exec mode commands.*

Example To enable command authorization for configuration mode commands, use the commands:

```
awplus# configure terminal
awplus(config)# aaa authorization config-commands
```

To disable command authorization for configuration mode commands, use the commands:

```
awplus# configure terminal
awplus(config)# no aaa authorization config-commands
```

Related Commands aaa authorization commands

authorization commands

tacacs-server host

Command changes Version 5.4.6-2.1: command added

ip tacacs source-interface

Overview This command sets the source interface, or IP address, to use for all TACACS+ packets sent from the device. By default, TACACS+ packets use the source IP address of the egress interface.

Use the **no** variant of this command to remove the source interface configuration and use the source IP address of the egress interface.

Syntax

```
ip tacacs source-interface {<interface>|<ip-address>}
no ip tacacs source-interface
```

Parameter	Description
<interface>	Interface name.
<ip-address>	IP address in the dotted decimal format A.B.C.D.

Default The source IP address of outgoing TACACS+ packets default to the IP address of the egress interface.

Mode Global Configuration

Usage Setting the source interface ensures that all TACACS+ packets sent from the device will have the same source IP address. Once configured this affects all TACACS+ packets, namely accounting, authentication, and authorization.

If the specified interface is down or there is no IP address on the interface, then the source IP address of outgoing TACACS+ packets will default to the IP address of the egress interface.

Example To configure all outgoing TACACS+ packets to use the IP address of the loop-back “lo” interface as the source IP address, use the following commands:

```
awplus# configure terminal
awplus(config)# ip tacacs source-interface lo
```

To reset the source interface configuration for all TACACS+ packets, use the following commands:

```
awplus# configure terminal
awplus(config)# no ip tacacs source-interface
```

Related Commands tacacs-server host

show tacacs+

Command changes Version 5.4.6-2.1: command added

show tacacs+

Overview This command displays the current TACACS+ server configuration and status.

Syntax `show tacacs+`

Mode User Exec and Privileged Exec

Example To display the current status of TACACS+ servers, use the command:

```
awplus# show tacacs+
```

Output Figure 44-1: Example output from the **show tacacs+** command

```
TACACS+ Global Configuration
  Source Interface    : not configured
  Timeout             : 5 sec

Server Host/      Server
IP Address        Status
------------------------------------------------------------
192.168.1.10      Alive
192.168.1.11      Unknown
```

Table 1: Parameters in the output of the **show tacacs+** command

Output Parameter	Meaning	
`Source Interface`	IP address of source interface if set with ip tacacs source-interface.	
`Timeout`	A time interval in seconds.	
`Server Host/IP Address`	TACACS+ server hostname or IP address.	
`Server Status`	The status of the authentication port.	
	`Alive`	The server is alive.
	`Dead`	The server has timed out.
	`Error`	The server is not responding or there is an error in the key string entered.
	`Unknown`	The server is never used or the status is unkown.
	`Unreachable`	The server is unreachable.
	`Unresolved`	The server name can not be resolved.

Command changes Version 5.4.6-2.1: **Source Interface** parameter added

tacacs-server host

Overview Use this command to specify a remote TACACS+ server host for authentication, authorization and accounting, and to set the shared secret key to use with the TACACS+ server. The parameters specified with this command override the corresponding global parameters for TACACS+ servers.

Use the **no** variant of this command to remove the specified server host as a TACACS+ authentication and authorization server.

Syntax

```
tacacs-server host {<host-name>|<ip-address>} [key
[8]<key-string>]
```

```
no tacacs-server host {<host-name>|<ip-address>}
```

Parameter	Description
<host-name>	Server host name. The DNS name of the TACACS+ server host.
<ip-address>	The IP address of the TACACS+ server host, in dotted decimal notation A.B.C.D.
`key`	Set shared secret key with TACACS+ servers.
`8`	Specifies that you are entering a password as a string that has already been encrypted instead of entering a plain text password. The running config displays the new password as an encrypted string even if password encryption is turned off.
<key-string>	Shared key string applied, a value in the range 1 to 64 characters. Specifies the shared secret authentication or encryption key for all TACACS+ communications between this device and the TACACS+ server. This key must match the encryption used on the TACACS+ server. This setting overrides the global setting of the tacacs-server key command. If no key value is specified, the global value is used.

Default No TACACS+ server is configured by default.

Mode Global Configuration

Usage A TACACS+ server host cannot be configured multiple times like a RADIUS server.

As many as four TACACS+ servers can be configured and consulted for login authentication, enable password authentication and accounting. The first server configured is regarded as the primary server and if the primary server fails then the backup servers are consulted in turn. A backup server is consulted if the primary server fails, not if a login authentication attempt is rejected. The reasons a server would fail are:

- it is not network reachable
- it is not currently TACACS+ capable

- it cannot communicate with the switch properly due to the switch and the server having different secret keys

Examples

To add the server `tac1.company.com` as the TACACS+ server host, use the following commands:

```
awplus# configure terminal
awplus(config)# tacacs-server host tac1.company.com
```

To set the secret key to `secret` on the TACACS+ server `192.168.1.1`, use the following commands:

```
awplus# configure terminal
awplus(config)# tacacs-server host 192.168.1.1 key secret
```

To remove the TACACS+ server `tac1.company.com`, use the following commands:

```
awplus# configure terminal
awplus(config)# no tacacs-server host tac1.company.com
```

Related Commands

aaa accounting commands

aaa authentication login

tacacs-server key

tacacs-server timeout

show tacacs+

tacacs-server key

Overview This command sets a global secret key for TACACS+ authentication, authorization and accounting. The shared secret text string is used for TACACS+ communications between the switch and all TACACS+ servers.

Note that if no secret key is explicitly specified for a TACACS+ server with the tacacs-server host command, the global secret key will be used for the shared secret for the server.

Use the **no** variant of this command to remove the global secret key.

Syntax

```
tacacs-server key [8] <key-string>
no tacacs-server key
```

Parameter	Description
8	Specifies a string in an encrypted format instead of plain text. The running config will display the new password as an encrypted string even if password encryption is turned off.
<key-string>	Shared key string applied, a value in the range 1 to 64 characters. Specifies the shared secret authentication or encryption key for all TACACS+ communications between this device and all TACACS+ servers. This key must match the encryption used on the TACACS+ server.

Mode Global Configuration

Usage Use this command to set the global secret key shared between this client and its TACACS+ servers. If no secret key is specified for a particular TACACS+ server using the tacacs-server host command, this global key is used.

Examples To set the global secret key to `secret` for TACACS+ server, use the following commands:

```
awplus# configure terminal
awplus(config)# tacacs-server key secret
```

To delete the global secret key for TACACS+ server, use the following commands:

```
awplus# configure terminal
awplus(config)# no tacacs-server key
```

Related Commands tacacs-server host

show tacacs+

tacacs-server timeout

Overview Use this command to specify the TACACS+ global timeout value. The timeout value is how long the device waits for a reply to a TACACS+ request before considering the server to be dead.

Note that this command configures the **timeout** parameter for TACACS+ servers globally.

The **no** variant of this command resets the transmit timeout to the default (5 seconds).

Syntax

```
tacacs-server timeout <seconds>
no tacacs-server timeout
```

Parameter	Description
<seconds>	TACACS+ server timeout in seconds, in the range 1 to 1000.

Default The default timeout value is 5 seconds.

Mode Global Configuration

Examples To set the timeout value to 3 seconds, use the following commands:

```
awplus# configure terminal
awplus(config)# tacacs-server timeout 3
```

To reset the timeout period for TACACS+ servers to the default, use the following commands:

```
awplus# configure terminal
awplus(config)# no tacacs-server timeout
```

Related Commands tacacs-server host

show tacacs+

Part 6: High Availability

45 High Availability Commands

Introduction

Overview This chapter provides an alphabetical reference of commands used to configure high availability. For more information, see the High Availability Feature Overview and Configuration_Guide.

Command List

- "ha associate" on page 2040

ha associate

Overview This command is used to change the mode of a VRRP session to High Availability (HA) mode, and to associate it with a HA bypass port.

Use the **no** variant of this command to take the VRRP session out of HA-Mode.

Syntax

```
ha associate [wan-bypass <1-2>]
no ha associate [wan-bypass <1-2>]
```

Parameter	Description
<wan-bypass>	The control wan bypass port.
<1-2>	The identifier number of wan bypass port.

Default The default state of bypass port 1 and port 2 is deactivated.

Mode Router Configuration

Usage One VRRP session can have the control of one or two bypass ports. After VRRP has the control of the wan-bypass ports, the state of the wan-bypass ports will be determined by the VRRP state. If the VRRP session is in master state, then the associated wan-bypass ports will be deactivated. If the VRRP session is in backup or initial state, then the associated wan-bypass ports will be activated.

If no wan-bypass ports are specified, then it puts the VRRP session in HA mode and the wan-bypass ports will always be deactived.

If there are one or more VRRP sessions running in HA mode, then the wan-bypass ports should not be controlled by an other feature.

Examples To change a VRRP session into HA mode, use the following commands:

```
awplus#configure terminal
awplus(config)#router vrrp 1 vlan1
awplus(config-router)#ha associate
```

To change a VRRP session into HA mode and allow it to control wan-bypass port 1, use the following commands:

```
awplus#configure terminal
awplus(config)#vrrp 1 vlan1
awplus(config-router)#ha associate wan-bypass 1
```

To change a VRRP session to stop control of a wan-bypass port 1, use the following commands:

```
awplus#configure terminal
awplus(config)#router vrrp 1 vlan1
awplus(config-router)#no ha associate wan-bypass 1
```

To change a VRRP session out of HA-mode, use the following commands:

```
awplus#configure terminal
awplus(config)#router vrrp 1 vlan1
awplus(config-router)#no ha associate
```

Related Commands show vrrp

46 VRRP Commands

Introduction

Overview

This chapter provides an alphabetical reference for commands used to configure the Virtual Router Redundancy Protocol (VRRP). For more information, see the VRRP Feature Overview and Configuration Guide.

For information on filtering and saving command output, see the "Getting Started with AlliedWare Plus" Feature Overview and Configuration Guide.

Command List

- "advertisement-interval" on page 2044
- "alternate-checksum-mode" on page 2046
- "circuit-failover" on page 2047
- "debug vrrp" on page 2049
- "debug vrrp events" on page 2050
- "debug vrrp packet" on page 2051
- "disable (VRRP)" on page 2052
- "enable (VRRP)" on page 2053
- "preempt-mode" on page 2054
- "priority" on page 2056
- "router ipv6 vrrp (interface)" on page 2058
- "router vrrp (interface)" on page 2060
- "show debugging vrrp" on page 2062
- "show running-config router ipv6 vrrp" on page 2063
- "show running-config router vrrp" on page 2064
- "show vrrp" on page 2065
- "show vrrp counters" on page 2067
- "show vrrp ipv6" on page 2070

- "show vrrp (session)" on page 2071
- "transition-mode" on page 2073
- "undebug vrrp" on page 2075
- "undebug vrrp events" on page 2076
- "undebug vrrp packet" on page 2077
- "virtual-ip" on page 2078
- "virtual-ipv6" on page 2080
- "vrrp vmac" on page 2082

advertisement-interval

Overview Use this command to configure the advertisement interval of the virtual router. This is the length of time, in seconds, between each advertisement sent from the master to its backup(s).

IPv6 VRRP advertisements are sent to the multicast address assigned to the VRRP group (ff02:0:0:0:0) and a backup virtual router has to join all multicast groups within this range. VRRP advertisements are sent to a multicast address (ff02::12) every second by default.

Use the **no** variant of this command to remove an advertisement interval of the virtual router, which has been set using the **advertisement-interval** command, and revert to the default advertisement interval of 1 second.

Syntax

```
advertisement-interval [<1-255>|csec <1-4095>]
no advertisement-interval
```

Parameter	Description
<1-255>	Specifies the advertisement interval in seconds.
csec	Use centiseconds instead of seconds for the advertisement interval.
<1-4095>	Specifies the advertisement interval in centiseconds.

Default The default advertisement interval is 1 second.

Mode Router Configuration

Usage See the VRRP Feature Overview and Configuration Guide for more information about:

- setting the advertisement-interval when configuring VRRP
- using seconds for VRRPv2 host compatibility whenever you use transition-mode to upgrade or transition from VRRPv2 to VRRPv3
- VRRPv3 IPv4 configuration details
- VRRPv3 IPv6 configuration details

Examples The example below shows you how to configure the advertisement interval to 6 seconds for the VRRP IPv4 session with VR ID 5 on interface vlan2:

```
awplus# configure terminal
awplus(config)# router vrrp 5 vlan2
awplus(config-router)# advertisement-interval 6
```

The example below shows you how to reset the advertisement interval to the default of 1 second for the VRRP IPv4 session with VR ID 5 on interface vlan2:

```
awplus# configure terminal
awplus(config)# router vrrp 5 vlan2
awplus(config-router)# no advertisement-interval
```

The example below shows you how to configure the advertisement interval to 6 seconds for the VRRPv3 IPv6 session with VR ID 5 on interface vlan2:

```
awplus# configure terminal
awplus(config)# router ipv6 vrrp 5 vlan2
awplus(config-router)# advertisement-interval 6
```

Related Commands

router vrrp (interface)

router ipv6 vrrp (interface)

alternate-checksum-mode

Overview Use this command to enable an alternate checksum mode for VRRPv3 to allow inter-operability with some other vendors' products. The IPv4 checksum for VRRPv3 advertisements will then use a pseudo header in the calculation.

This mode may be required if the other product indicates checksum errors on VRRP packets sent by AlliedWare Plus devices.

Use the **no** variant of this command to disable the alternate checksum mode.

Syntax

```
alternate-checksum-mode
no alternate-checksum-mode
```

Default Disabled

Mode Router Configuration

Example To turn on the alternate checksum mode for VRRP instance 1 on VLAN1, use the commands:

```
awplus# configure terminal
awplus(config)# router vrrp 1 vlan1
awplus(config-router)# alternate-checksum-mode
```

To turn off the alternate checksum mode for VRRP instance 1 on VLAN1, use the commands:

```
awplus# configure terminal
awplus(config)# router vrrp 1 vlan1
awplus(config-router)# no alternate-checksum-mode
```

Related Commands show running-config

Command changes Version 5.4.7-1.1: command added

circuit-failover

Overview Use this command to enable the VRRP circuit failover feature.

Circuit failover enables the device to take action if the uplink interface goes down, so that the VRRP backup, whose uplink interface is still active, takes over as VRRP master. See the Usage section below and the VRRP Feature Overview and Configuration Guide for more information.

Use the **no** variant of this command to disable this feature.

Syntax

```
circuit-failover <interface> <1-253>
no circuit-failover [<interface> <1-253>]
```

Parameter	Description
<interface>	The interface of the router that is monitored. The interface must exist on the router, and is usually an upstream interface. Should the interface go down, then another router that is configured as a backup router in the group takes over as the master. You should configure the circuit failover on an interface other than the active VRRP interface - generally the uplink interface.
<1-253>	Delta value. The value by which virtual routers decrement their priority value during a circuit failover event. Configure this value to be greater than the difference of priorities on the master and backup routers. In the case of failover, this priority delta value is subtracted from the current VR Master Router priority value.

Mode Router Configuration

Usage You can use Circuit Failover to monitor up to 32 interfaces per VRRP instance. If a VRRP instance is configured to monitor multiple interfaces, the VRRP priority will be cumulatively decremented by the configured delta for each interface as it goes down.

For example, if VRRP is configured to monitor VLAN2 and VLAN3 with the commands:

```
awplus# configure terminal
awplus(config)# interface vlan1
awplus(config-if)# ip address 192.168.1.1/24
awplus(config-if)# exit
awplus(config)# router vrrp 1 vlan1
awplus(config-router)# virtual-ip 192.168.1.10 backup
awplus(config-router)# priority 100
awplus(config-router)# circuit-failover vlan2 10
awplus(config-router)# circuit-failover vlan3 20
```

then the following examples explain the effect of each VLAN going down:

- If only VLAN2 fails, then the VRRP priority will be decremented by 10. VRRP priority would be adjusted to become 90, because 100 - 10 = 90.
- If only VLAN3 fails, then the VRRP priority will be decremented by 20. VRRP priority would be adjusted to become 80, because 100 - 20 = 80.
- If both VLAN2 and VLAN3 fail, then the VRRP priority will be decremented by the cumulative delta values of all monitored interfaces. VRRP priority would therefore be adjusted to become 70, because 100 - 10 - 20 = 70.

As each monitored interface recovers, the VRRP priority is incremented by the same delta value.

When you configure the delta values of the monitored interfaces, make sure their sum is high enough to ensure that the VRRP priority stays above zero if all the interfaces go down.

Examples To configure circuit failover on an IPv4 VRRP instance, so that if interface VLAN3 goes down, then the priority of VRRP instance 1 is reduced by 30, use the commands:

```
awplus# configure terminal
awplus(config)# router vrrp 1 vlan2
awplus(config-router)# circuit-failover vlan3 30
```

To remove all configured circuit failovers for the VRRP IPv4 session with VR ID 1 on interface vlan2, use the commands:

```
awplus# configure terminal
awplus(config)# router vrrp 1 vlan2
awplus(config-router)# no circuit-failover
```

To configure circuit failover on a VRRPv3 IPv6 session with VR ID 1, so that when interface VLAN3 goes down, the priority of VRRP instance 1is reduced by 30, use the commands:

```
awplus# configure terminal
awplus(config)# router ipv6 vrrp 1 vlan2
awplus(config-router)# circuit-failover vlan3 30
```

To remove all configured circuit failovers for the VRRPv3 IPv6 session with VR ID 1 on interface vlan2, use the commands:

```
awplus# configure terminal
awplus(config)# router ipv6 vrrp 1 vlan2
awplus(config-router)# no circuit-failover
```

Related Commands router vrrp (interface)

router ipv6 vrrp (interface)

debug vrrp

Overview Use this command to specify debugging options for VRRP. The **all** parameter turns on all the debugging options.

Use the **no** variant of this command to disable this function.

Syntax

```
debug vrrp [all]
no debug vrrp [all]
```

Mode Privileged Exec and Global Configuration

Usage See the VRRP Feature Overview and Configuration Guide for more information about VRRPv3 debugging details.

Examples The example below shows you how to enable all debugging for VRRP:

```
awplus# configure terminal
awplus(config)# debug vrrp all
```

The example below shows you how to disable all debugging for VRRP:

```
awplus# configure terminal
awplus(config)# no debug vrrp all
```

Related Commands show debugging vrrp

undebug vrrp

debug vrrp events

Overview Use this command to specify debugging options for VRRP event troubleshooting.

Use the **no** variant of this command to disable this function.

Syntax

```
debug vrrp events
no debug vrrp events
```

Mode Privileged Exec and Global Configuration

Usage The **debug vrrp events** command enables the display of debug information related to VRRP internal events.

See the VRRP Feature Overview and Configuration Guide for more information about VRRPv3 debugging details.

Examples The example below shows you how to enable events debugging for VRRP:

```
awplus# configure terminal
awplus(config)# debug vrrp events
```

The example below shows you how to disable events debugging for VRRP:

```
awplus# configure terminal
awplus(config)# no debug vrrp events
```

Related Commands

show debugging vrrp

undebug vrrp events

debug vrrp packet

Overview Use this command to specify debugging options for VRRP packets.

Use the **no** variant of this command to disable this function.

Syntax

```
debug vrrp packet [send|recv]
no debug vrrp packet [send|recv]
```

Parameter	Description
`send`	Specifies the debug option set for sent packets.
`recv`	Specifies the debug option set for received packets.

Mode Privileged Exec and Global Configuration

Usage The **debug vrrp packet** command enables the display of debug information related to the sending and receiving of packets.

See the VRRP Feature Overview and Configuration Guide for more information about VRRPv3 debugging details.

Examples The example below shows you how to enable received and sent packet debugging for VRRP:

```
awplus# configure terminal
awplus(config)# debug vrrp packet
```

The example below shows you how to enable only received packet debugging for VRRP:

```
awplus# configure terminal
awplus(config)# debug vrrp packet recv
```

The example below shows you how to enable only sent packet debugging for VRRP:

```
awplus# configure terminal
awplus(config)# debug vrrp packet send
```

The example below shows you how to disable packet debugging for VRRP:

```
awplus# configure terminal
awplus(config)# no debug vrrp packet
```

Related Commands show debugging vrrp

undebug vrrp packet

disable (VRRP)

Overview Use this command to disable a VRRP IPv4 session or a VRRPv3 IPv6 session on the router to stop it participating in virtual routing. Note that when this command is configured then a backup router assumes the role of master router depending on its priority. See the enable (VRRP) command to enable a VRRP IPv4 session or a VRRPv3 IPv6 session on the router.

Syntax

```
disable
```

Mode Router Configuration

Usage See the VRRP Feature Overview and Configuration Guide for more information about VRRPv3 IPv4 and IPv6 configuration details.

Examples The example below shows you how to disable the VRRP session for VRRP VR ID 5 on vlan2:

```
awplus# configure terminal
awplus(config)# router vrrp 5 vlan2
awplus(config-router)# disable
```

The example below shows you how to disable the VRRPv3 session for VRRPv3 VR ID 3 on vlan1:

```
awplus# configure terminal
awplus(config)# router ipv6 vrrp 3 vlan1
awplus(config-router)# disable
```

Related Commands

enable (VRRP)

router vrrp (interface)

router ipv6 vrrp (interface)

show vrrp

enable (VRRP)

Overview Use this command to enable the VRRP session on the router to make it participate in virtual routing. To make changes to the VRRP configuration, first disable the router from participating in virtual routing using the disable (VRRP) command.

Syntax

```
enable
```

Mode Router Configuration

Usage You must configure the virtual IP address and define the interface for the VRRP session (using the virtual-ip or virtual-ipv6 and the router vrrp (interface) or router ipv6 vrrp (interface) commands) before using this command.

See the VRRP Feature Overview and Configuration Guide for more information about VRRPv3 IPv4 and IPv6 configuration details.

Examples To enable the VRRP session for VRRP VR ID 5 on vlan2, use the commands:

```
awplus# configure terminal
awplus(config)# router vrrp 5 vlan2
awplus(config-router)# enable
```

To enable the VRRPv3 session for VRRPv3 VR ID 3 on vlan1, use the commands:

```
awplus# configure terminal
awplus(config)# router ipv6 vrrp 3 vlan1
awplus(config-router)# enable
```

Related Commands

disable (VRRP)

router vrrp (interface)

router ipv6 vrrp (interface)

show vrrp

virtual-ip

virtual-ipv6

preempt-mode

Overview Use this command to configure preempt mode. If preempt-mode is set to **true**, then the highest priority backup will always be the master when the default master is unavailable.

If preempt-mode is set to **false**, then a higher priority backup will not preempt a lower priority backup who is acting as master.

Syntax

```
preempt-mode {true|false}
```

Parameter	Description
`true`	Preemption is enabled.
`false`	Preemption is disabled.

Default The default is **true**.

Mode Router Configuration

Usage When the master router fails, the backup routers come online in priority order—highest to lowest. Preempt mode means that a higher priority back up router will take over the master role from a lower priority back up. Preempt mode on **true** allows a higher priority backup router to relieve a lower priority backup router.

By default, a preemptive scheme is enabled whereby a higher priority backup virtual router that becomes available take over for the backup virtual router that was elected to become the master virtual router.

This preemptive scheme can be disabled using the **preempt-mode false** command. If preemption is disabled, the backup virtual router that is currently elected as the master virtual router does not transition to backup virtual router again whenever the alternate backup router with a higher priority becomes available.

See the VRRP Feature Overview and Configuration Guide for more information about:

- VRRPv3 IPv4 configuration details
- VRRPv3 IPv6 configuration details
- preempt mode

Examples The example below shows you how to configure preempt-mode as true for VRRP VR ID 5 on vlan2:

```
awplus# configure terminal
awplus(config)# router vrrp 5 vlan2
awplus(config-router)# preempt-mode true
```

The example below shows you how to configure preempt-mode as false for VRRP VR ID 5 on vlan2:

```
awplus# configure terminal
awplus(config)# router vrrp 5 vlan2
awplus(config-router)# preempt-mode false
```

The example below shows you how to configure preempt-mode as true for VRRPv3 VR ID 3 on vlan1:

```
awplus# configure terminal
awplus(config)# router ipv6 vrrp 3 vlan1
awplus(config-router)# preempt-mode true
```

The example below shows you how to configure preempt-mode as false for VRRPv3 VR ID 3 on vlan1:

```
awplus# configure terminal
awplus(config)# router ipv6 vrrp 3 vlan1
awplus(config-router)# preempt-mode false
```

Related Commands

circuit-failover

priority

router vrrp (interface)

router ipv6 vrrp (interface)

priority

Overview Use this command to configure the VRRP router priority within the virtual router. The highest priority router is Master (unless preempt-mode is false).

Use the **no** variant of this command to remove the VRRP router priority within the virtual router, which has been set using the **priority** command.

Syntax

```
priority <1-255>
no priority
```

Parameter	Description
<1-255>	The priority. For the master router, use 255 for this parameter; otherwise use any number from the range <1-254>.

Default Defaults for priority are: **master router**= 255; **backup**= 100.

Mode Router Configuration

Usage Priority determines the role that each VRRP router plays and what happens if the master virtual router fails. If a VRRP router owns the IP address of the virtual router and the IP address of the interface, then this VRRP router functions as the master virtual router.

Priority also determines whether a VRRP router functions as a backup virtual router and the order of ascendancy to becoming a master virtual router if the master virtual router fails. Configure the priority of each backup virtual router with a a value of 1 through 254.

See the VRRP Feature Overview and Configuration Guide for more information about VRRPv3 IPv4 and IPv6 configuration details.

Examples The example below shows you how to configure 101 as the priority for VRRP VR ID 5 on vlan2:

```
awplus# configure terminal
awplus(config)# router vrrp 5 vlan2
awplus(config-router)# priority 101
```

The example below shows you how to remove the priority configured for VRRP VR ID 5 on vlan2:

```
awplus# configure terminal
awplus(config)# router vrrp 5 vlan2
awplus(config-router)# no priority
```

The example below shows you how to configure 101 as the priority for VRRPv3 VR ID 3 on vlan1:

```
awplus# configure terminal
awplus(config)# router ipv6 vrrp 3 vlan1
awplus(config-router)# priority 101
```

The example below shows you how to remove the configured priority for VRRPv3 VR ID 3 on vlan1:

```
awplus# configure terminal
awplus(config)# router ipv6 vrrp 3 vlan1
awplus(config-router)# no priority
```

Related Commands

circuit-failover

preempt-mode

router ipv6 vrrp (interface)

Overview Use this command to configure VRRPv3 for IPv6 and define the interface that will participate in virtual routing to send and receive advertisement messages. This command allows you to enter the Router Configuration mode.

Use the **no** variant of this command to remove the VRRPv3 for IPv6 configuration. Disable the VRRP session before using the **no** variant of this command.

Syntax

```
router ipv6 vrrp <vrid> <interface>
no router ipv6 vrrp <vrid> <interface>
```

Parameter	Description
<vrid>	*<1-255>* The ID of the virtual router VRRPv3 IPv6 session to create.
<interface>	Specify the name of the interface that will participate in the virtual routing. The interface must exist on the router. The interface specified sends and receives VRRPv3 IPv6 advertisement messages.

Mode Global Configuration

Usage Use the required *<interface>* placeholder to define the interface that will participate in virtual routing. This interface is used for two purposes - to send/receive advertisement messages and to forward on behalf of the virtual router when in master state.

NOTE: *Tunnels and PPP interfaces are not supported.*

NOTE: *Configuring a high number of instances may adversely affect the device's performance, depending on the device CPU, the other protocols it is running, and whether you set the advertisement interval to less than 1 second.*

See the VRRP Feature Overview and Configuration Guide for more information about VRRPv3 IPv6 configuration details.

Examples The example below shows you how to enable a VRRPv3 session with VR ID 3 on vlan2:

```
awplus# configure terminal
awplus(config)# router ipv6 vrrp 3 vlan2
awplus(config-router)# enable
awplus(config-router)#
```

The example below shows you how to disable a VRRPv3 session with VR ID 3 on vlan2:

```
awplus(config-router)# disable
awplus(config-router)# exit
awplus(config)# no router ipv6 vrrp 3 vlan2
awplus(config)#
```

Related Commands

advertisement-interval

circuit-failover

router vrrp (interface)

Overview Use this command to configure VRRP IPv4 and define the interface that will participate in virtual routing to send and receive advertisement messages. This command allows you to enter the Router Configuration mode.

Use the **no** variant of this command to remove the VRRP IPv4 configuration. Disable the VRRP session before using the **no** variant of this command.

Syntax

```
router vrrp <vrid> <interface>
no router vrrp <vrid> <interface>
```

Parameter	Description
<vrid>	*<1-255>* The ID of the virtual router VRRP IPv4 session to create.
<interface>	Specify the name of the interface that will participate in the virtual routing. The interface must exist on the router. The interface specified sends and receives VRRP IPv4 advertisement messages.

Mode Global Configuration

Usage Use the required *<interface>* placeholder to define the interface that will participate in virtual routing. This interface is used for two purposes - to send/receive advertisement messages and to forward on behalf of the virtual router when in master state.

NOTE: *Tunnels and PPP interfaces are not supported.*

NOTE: *Configuring a high number of instances may adversely affect the device's performance, depending on the device CPU, the other protocols it is running, and whether you set the advertisement interval to less than 1 second.*

See the VRRP Feature Overview and Configuration Guide for more information about VRRPv3 IPv4 configuration details.

Examples To enable a VRRP session with VR ID 5 on vlan1, use the commands:

```
awplus# configure terminal
awplus(config)# router vrrp 5 vlan1
awplus(config-router)# enable
```

To disable a VRRP session with VR ID 5 on vlan1, use the commands:

```
awplus(config-router)# disable
awplus(config-router)# exit
awplus(config)# no router vrrp 5 vlan1
```

Related Commands

advertisement-interval

circuit-failover

disable (VRRP)

enable (VRRP)

show debugging vrrp

Overview Use this command to display the set VRRP debugging option. Use the terminal monitor command to display output on the console otherwise debug output is in the log file.

For information on filtering and saving command output, see the "Getting Started with AlliedWare Plus" Feature Overview and Configuration Guide.

See the VRRP Feature Overview and Configuration Guide for more information about VRRPv3 debugging details.

Syntax

```
show debugging vrrp
```

Mode User Exec and Privileged Exec

Example The example below shows you how to display VRRP debugging:

```
awplus# show debugging vrrp
```

Related Commands

debug vrrp

debug vrrp events

debug vrrp packet

show running-config router ipv6 vrrp

Overview Use this command to show the running configuration for VRRPv3 IPv6.

For information on filtering and saving command output, see the "Getting Started with AlliedWare Plus" Feature Overview and Configuration Guide.

See the VRRP Feature Overview and Configuration Guide for more information about VRRPv3 IPv6 configuration details.

Syntax

```
show running-config router vrrp
```

Mode Privileged Exec, Global Configuration, Line Configuration, and Interface Configuration.

Example The example below shows you how to display the running configuration for VRRPv3 IPv6:

```
awplus# show running-config router ipv6 vrrp
```

Output Figure 46-1: Example output from the **show running-config router ipv6 vrrp** command

```
!
router ipv6 vrrp 3 vlan3
 virtual-ip fe80::202:b3ff:fed5:983e master
 circuit-failover vlan3 3
 advertisement-interval 6
 preempt-mode false
!
```

show running-config router vrrp

Overview Use this command to show the running configuration for VRRP IPv4.

For information on filtering and saving command output, see the "Getting Started with AlliedWare Plus" Feature Overview and Configuration Guide.

See the VRRP Feature Overview and Configuration Guide for more information about VRRPv3 IPv4 configuration details.

Syntax

```
show running-config router vrrp
```

Mode Privileged Exec, Global Configuration, Line Configuration, and Interface Configuration.

Example The example below shows you how to display the running configuration for VRRP IPv4:

```
awplus# show running-config router vrrp
```

Output Figure 46-2: Example output from the **show running-config router vrrp** command

```
!
router vrrp 2 vlan2
 circuit-failover vlan2 2
 advertisement-interval 4
 preempt-mode true
!
```

show vrrp

Overview Use this command to display information about all VRRP IPv4 sessions. This command shows a summary when the optional **brief** parameter is used.

For information on filtering and saving command output, see the "Getting Started with AlliedWare Plus" Feature Overview and Configuration Guide.

See the VRRP Feature Overview and Configuration Guide for more information about VRRPv3 IPv4 configuration details.

Syntax

```
show vrrp [brief]
```

Parameter	Description
brief	Brief summary of VRRP sessions.

Mode User Exec and Privileged Exec

Example To display information about all VRRP IPv4 sessions, enter the command:

```
awplus# show vrrp
```

To display brief summary output about VRRP IPv4 sessions, enter the command:

```
awplus# show vrrp brief
```

Output Figure 46-3: Example output from the **show vrrp** command

```
awplus#show vrrp
VMAC enabled
Address family IPv4
VRRP Id: 1 on interface: vlan2
 State: AdminUp    - Master
 Virtual IP address: 192.168.1.2 (Not-owner)
 Priority is 100
 Advertisement interval: 100 centiseconds
 Preempt mode: TRUE
 Multicast membership on IPv4 interface vlan2: JOINED
 Transition mode: FALSE
 Accept mode: FALSE
 Master address: 192.168.1.3
 High Availability: enabled
  wan-bypass 1 (eth1) is on
```

Figure 46-4: Example output from the **show vrrp brief** command

```
awplus#show vrrp brief
Interface        Grp  Prio Own  Pre  State      Master addr      Group addr
 vlan10            1   200   N    P  Master     192.168.10.4     192.168.10.253
 vlan10            2   150   N    P  Backup     192.168.10.4     192.168.10.254
 vlan11            3   200   N    P  Master     192.168.11.4     192.168.11.253
 vlan11            4   150   N    P  Backup     192.168.11.4     192.168.11.254
```

Related Commands

enable (VRRP)

disable (VRRP)

show vrrp counters

Overview This command displays VRRP SNMP counters on the console, as described in the VRRP MIB and RFC2787, for debugging use while you configure VRRP with commands in this chapter.

For information on filtering and saving command output, see the "Getting Started with AlliedWare Plus" Feature Overview and Configuration Guide.

Syntax

```
show vrrp counters
```

Mode User Exec and Privileged Exec

Usage The output has a section for global counters and a section of counters for each VRRP instance configured. See the descriptions of the counters below the sample output as per RFC2787.

NOTE: *Note that the counters displayed with this commands are the same counters as described in RFC 2787 (Copyright (C) The Internet Society (2000). All Rights Reserved) except for the "Monitored Circuit Up" and "Monitored Circuit Down" counters, which are additions beyond the MIB.*

Example To display information about VRRP SNMP counters on the console, enter the command:

```
awplus# show vrrp counters
```

Figure 46-5: Example output from the **show vrrp counters** command

```
awplus#show vrrp counters
VRRP Global Counters:
  Checksum Errors .... 230
  Version Errors ..... 0
  VRID Errors ........ 230

VRRP IPv4 counters for VR 10/vlan10:
  Master Transitions ........ 0
  Received Advertisements ... 0
  Internal Errors ........... 0
  TTL Errors ................ 0
  Received Priority 0 Pkt ... 0
  Sent Priority 0 Pkt ....... 0
  Received Invalid Type ..... 0
  Address List Errors ....... 0
  Packet Length Errors ...... 0
  Monitored Circuit Up ...... 0
  Monitored Circuit Down..... 0
```

```
VRRP IPv4 counters for VR 100/vlan100:
  Master Transitions ........ 1
  Received Advertisements ... 1614
  Internal Errors ........... 0
  TTL Errors ................ 0
  Received Priority 0 Pkt ... 0
  Sent Priority 0 Pkt ....... 0
  Received Invalid Type ..... 0
  Address List Errors ....... 0
  Packet Length Errors ...... 0
  Monitored Circuit Up ...... 0
  Monitored Circuit Down..... 2
```

Table 1: Global counters with descriptions for the **show vrrp counters** command:

Counter	Description
`Checksum Errors`	The total number of VRRP packets received with an invalid VRRP checksum value.
`Version Errors`	The total number of VRRP packets received with an unknown or unsupported version number.
`VRID Errors`	The total number of VRRP packets received with an invalid VRID for this virtual router.

Table 2: Per VR counters with descriptions for the **show vrrp counters** command:

Counter	Description
`Master Transitions`	The total number of times that this virtual router's state has transitioned to MASTER.
`Received Advertisements`	The total number of VRRP advertisements received by this virtual router.
`Internal Errors`	The total number of VRRP advertisement packets received for which the advertisement interval is different than the one configured for the local virtual router.
`TTL Errors`	The total number of VRRP packets received by the virtual router with IP TTL (Time-To-Live) not equal to 255.
`Received Priority 0 Pkt`	The total number of VRRP packets received by the virtual router with a priority of '`0`'.
`Sent Priority 0 Pkt`	The total number of VRRP packets sent by the virtual router with a priority of '`0`'.
`Received Invalid Type`	The number of VRRP packets received by the virtual router with an invalid value in the '`type`' field.
`Address List Errors`	The total number of packets received for which the address list does not match the locally configured list for the virtual router.

Table 2: Per VR counters with descriptions for the **show vrrp counters** command: (cont.)

Counter	Description
`Packet Length Errors`	The total number of packets received with a packet length less than the length of the VRRP header.
`Monitored Circuit Up`	The total number of times the monitored circuit has generated the UP event.
`Monitored Circuit Down`	The total number of times the monitored circuit has generated the down event.

show vrrp ipv6

Overview Use this command to display information about all configured VRRPv3 IPv6 sessions for all interfaces, or all VRRPv3 IPv6 sessions for a given interface with the optional parameter.

For information on filtering and saving command output, see the "Getting Started with AlliedWare Plus" Feature Overview and Configuration Guide.

See the VRRP Feature Overview and Configuration Guide for more information about VRRPv3 IPv6 configuration details.

Syntax

```
show vrrp ipv6 [<interface>]
```

Parameter	Description
<interface>	Specify the name of the interface that will participate in the virtual routing. The interface must exist on the router. The interface specified sends and receives VRRPv3 IPv6 advertisement messages.

Mode User Exec and Privileged Exec

Example To display information about all VRRPv3 IPv6 sessions, enter the command:

```
awplus# show vrrp ipv6
```

Output Figure 46-6: Example output from the **show vrrp ipv6 vlan2** command

```
awplus#show vrrp ipv6 vlan2
VrId <1>
 State is Master
 Virtual IP is fe80::202:b3ff:fed5:983e (Owner)
 Interface is vlan2
 Priority is 255
 Advertisement interval is 4 sec
 Preempt mode is FALSE
```

Related Commands

enable (VRRP)

disable (VRRP)

show vrrp (session)

Overview Use this command to display information for a particular VRRP session.

For information on filtering and saving command output, see the "Getting Started with AlliedWare Plus" Feature Overview and Configuration Guide.

See the VRRP Feature Overview and Configuration Guide for more information about VRRPv3 IPv4 configuration details.

Syntax

```
show vrrp <vrid> <interface>
```

Parameter	Description
<vrid>	*<1-255>* The virtual router ID for which to display information. Session must already exist.
<interface>	The interface to display information about, for instance, `vlan2`.

Mode User Exec and Privileged Exec

Usage See the below sample output from the **show vrrp** command displaying information about VRRP session 1 configured on **vlan2**. Output shows that a Virtual IP address has been set.

```
awplus# show vrrp 1 vlan2
```

```
awplus#show vrrp 1 vlan2
Address family IPv4
VrId <1>
 Interface is vlan2
 State is Initialize
 Virtual IP address is 10.10.11.250 (Not IP owner)
 Priority is 100
 Advertisement interval is 1 sec
 Preempt mode is TRUE
 Multicase membership on IPv4 interface vlan1: JOINED
 Transition mode: FALSE
 Accept mode: TRUE
 Master address: 192.168.24.5
 High Availability:
enabled
  wan-bypass 1 (eth1) is on
```

See the below sample output from the **show vrrp** command displaying information about VRRP session 1 configured on **vlan3**. Output shows a Virtual IP address has not been set.

```
awplus# show vrrp 1 vlan3
```

```
awplus#show vrrp 1 vlan3
Address family IPv4
VrId <1>
 Interface is vlan3
 State is Initialize
 Virtual IP address is unset
 Priority is 100
 Advertisement interval is 1 sec
 Preempt mode is TRUE
Preempt mode is TRUE
 Multicase membership on IPv4 interface vlan3: JOINED
 Transition mode: FALSE
 Accept mode: TRUE
 Master address: 192.168.24.5
 High Availability:
enabled
  wan-bypass 1 (eth1) is on
```

Example The following command shows information about VRRP session 5 for interface **vlan2**.

```
awplus# show vrrp 5 vlan2
```

transition-mode

Overview Use this command to configure the IPv4 transition mode. Transition mode allows you to upgrade from VRRPv2 to VRRPv3 and gives interoperability between VRRPv2 and VRRPv3.

If transition-mode is set to **true**, then the IPv4 transition mode is enabled and VRRPv2 and VRRPv3 advertisements are sent allowing VRRPv2 and VRRPv3 interoperability. Received VRRPv2 advertisement packets are accepted and processed when transition-mode is true.

If transition-mode is set to **false**, then the IPv4 transition mode is disabled and only VRRPv3 advertisements are sent. Received VRRPv2 advertisement packets are dropped.

Note the advertisement-interval should not be configured to less than 1 second when using transition-mode. VRRPv2 can only use advertisements in whole second intervals.

Syntax

```
transition-mode {true|false}
```

Parameter	Description
`true`	Transition mode is enabled. This results in VRRPv2 and VRRPv3 IPv4 advertisements being sent. Transition mode is only available on VRRPv3 for interoperability with VRRPv2 while upgrading to VRRPv3.
`false`	Transition mode is disabled. This stops VRRPv2 IPv4 advertisements being sent. Only VRRPv3 advertisements are sent when disabled. Disable transition-mode after upgrading from VRRPv2 to VRRPv3.

Default The default is **false**.

Mode Router Configuration

Usage See the VRRP Feature Overview and Configuration Guide for more information:

- VRRPv3 IPv4 configuration details
- VRRPv3 IPv6 configuration details
- further information about configuring transition mode to upgrade from VRRPv2 to VRRPv3

Examples The example below shows you how to configure IPv4 transition-mode as true for VRRP VR ID 5 on vlan2:

```
awplus# configure terminal
awplus(config)# router vrrp 5 vlan2
awplus(config-router)# transition-mode true
```

The example below shows you how to configure IPv4 transition-mode as false for VRRP VR ID 5 on vlan2:

```
awplus# configure terminal
awplus(config)# router vrrp 5 vlan2
awplus(config-router)# transition-mode false
```

Related Commands router vrrp (interface)

undebug vrrp

Overview Use this command to disable all VRRP debugging.

Syntax

```
undebug vrrp all
```

Mode Privileged Exec

Example The example below shows you how to disable all VRRP debugging:

```
awplus# undebug vrrp all
```

Related Commands debug vrrp

undebug vrrp events

Overview Use this command to disable debugging options for VRRP event troubleshooting.

Syntax

```
undebug vrrp events
```

Mode Privileged Exec

Example The example below shows you how to disable VRRP event debugging:

```
awplus# undebug vrrp events
```

Related Commands debug vrrp events

undebug vrrp packet

Overview Use this command to disable debugging options for VRRP packets.

Syntax

```
undebug vrrp packet [send|recv]
```

Parameter	Description
`send`	Disable the debug option set for sent packets.
`recv`	Disable the debug option set for received packets.

Mode Privileged Exec

Examples The example below shows you how to disable VRRP sent packet debugging:

```
awplus# undebug vrrp packet send
```

The example below shows you how to disable VRRP received packet debugging:

```
awplus# undebug vrrp packet recv
```

The example below shows you how to disable all VRRP packet debugging:

```
awplus# undebug vrrp packet
```

Related Commands debug vrrp packet

virtual-ip

Overview Use this command to set the virtual IP address for the VRRP session. This is the IP address of the virtual router that end hosts set as their default gateway.

Use the **no** variant of this command to disable this feature.

Syntax

```
virtual-ip <ip-address> [master|backup|owner]
no virtual-ip
```

Parameter	Description
<ip-address>	The virtual IPv4 address of the virtual router, entered in dotted decimal format A.B.C.D.
`master`	Sets the default state of the VRRP router within the Virtual Router as **master**. For master, the router must own the Virtual IP address. Specify the **owner** option before using **master** option.
`backup`	Sets the default state of the VRRP router within the Virtual Router as **backup**.
`owner`	Sets the IPv6 address of the VRRP router within the Virtual Router as the **owner**. Specify this before using the **master** option.

Mode Router Configuration

Usage The VRRP master and owner of the virtual IPv4 address for the VRRP session only responds to the packets destined to the virtual IPv6 address. The VRRP master that is not an owner of the virtual IPv4 address for the VRRP session does not respond to the packets destined to the virtual IPv4 address, but forwards packets with a VMAC as the destination address. See the vrrp vmac command to enable and disable this feature.

See the VRRP Feature Overview and Configuration Guide for more information about VRRPv3 IPv4 configuration details.

Examples The example below shows you how to set the virtual IP address for VRRP VR ID 5 and the router as the VRRP master:

```
awplus# configure terminal
awplus(config)# router vrrp 5 vlan2
awplus(config-router)# virtual-ip 192.0.2.30 master
```

The example below shows you how to set the virtual IPv4 address for VRRP VR ID 5 and the router as the VRRP backup:

```
awplus# configure terminal
awplus(config)# router vrrp 5 vlan2
awplus(config-router)# virtual-ip 192.0.2.30 backup
```

The example below shows you how to set the virtual IPv4 address for VRRP VR ID 5 and the router as owner of the virtual IPv4 address:

```
awplus# configure terminal
awplus(config)# router vrrp 5 vlan2
awplus(config-router)# virtual-ip 192.0.2.30 owner
```

The example below shows you how to disable the virtual IPv4 address for VRRP VR ID 5

```
awplus# configure terminal
awplus(config)# router vrrp 5 vlan2
awplus(config-router)# no virtual-ip
```

Related Commands

router vrrp (interface)

enable (VRRP)

vrrp vmac

virtual-ipv6

Overview Use this command to set the virtual IPv6 address for the VRRPv3 session. This is the IPv6 address of the virtual router that end hosts set as their default gateway.

Note that the primary IPv6 address specified is an IPv6 link-local address. See the Usage note below for further information.

Use the **no** variant of this command to disable this feature.

Syntax

```
virtual-ipv6 <ipv6-address> [master|backup]
[primary|secondary]
```

```
no virtual-ipv6
```

Parameter	Description
<ipv6-address>	The IPv6 address of the virtual router, entered in hexadecimal, in the format X:X::X.X.
`master`	Sets **master** to be the default state of the VRRPv3 router within the Virtual Router. For **master**, we recommend using a Virtual IP address that is not owned by any of the VRRP routers in the same grouping (that share the same VRID).
`backup`	Sets **backup** to be the default state of the VRRPv3 router within the Virtual Router.
`primary`	Sets the specified address as the primary IPv6 address. The primary address must be a link-local IPv6 address.
`secondary`	Sets the specified address as the secondary IPv6 address. Normally this would be a globally-routable IPv6 address. This enables you to specify a globally-routable address as the default gateway address for all the hosts on a VLAN.

Mode Router Configuration

Usage The virtual router will reply to ping, telnet, and SSH requests to the virtual IP address. The virtual router will reply even if it does not own the virtual IP address.

The AlliedWare Plus VRRPv3 implementation supports one IPv6 virtual link local address per virtual router ID. Note that in the command examples fe80::1 is an IPv6 link-local address. An IPv6 link-local address is used because IPv6 link-local addresses are used by IPv6 ND (Neighbor Discovery). A host's default route to a router points to the IPv6 link- local address, not a specific global IPv6 address for the router. For the host's traffic to switch over to a backup router, the IPv6 link-local address of the router is used by VRRPv3.

See the VRRP Feature Overview and Configuration Guide for more information about VRRPv3 IPv6 configuration details.

Examples

The example below shows you how to set the virtual IPv6 address for VRRPv3 VR ID 3 and the router as the VRRPv3 master:

```
awplus# configure terminal
awplus(config)# router ipv6 vrrp 3 vlan1
awplus(config-router)# virtual-ipv6 fe80::1 master
```

The example below shows you how to set the virtual IPv6 address for VRRPv3 VR ID 3 and the router as the VRRPv3 backup:

```
awplus# configure terminal
awplus(config)# router ipv6 vrrp 3 vlan1
awplus(config-router)# virtual-ipv6 fe80::1 backup
```

The example below shows you disable the virtual IPv6 address for VRRPv3 VR ID 3:

```
awplus# configure terminal
awplus(config)# router ipv6 vrrp 3 vlan1
awplus(config-router)# no virtual-ipv6
```

Related Commands

router ipv6 vrrp (interface)

enable (VRRP)

vrrp vmac

vrrp vmac

Overview Use this command to enable or disable the VRRP Virtual MAC feature. This feature is used by VRRP to make the hosts use the virtual MAC address as the physical hardware address of their gateway.

A VRRP router master will use the virtual MAC address for any ARP responses associated with the virtual IP address, or any gratuitous ARPs sent on behalf of the virtual IP address.

All VRRP advertisements are sent using this virtual MAC address as the source MAC address.

The virtual MAC address has the form 00:00:5e:00:01:<VRID>, where VRID is the ID of the Virtual Router.

Syntax

```
vrrp vmac {enable|disable}
```

Mode Global Configuration

Examples To enable Virtual MAC enter:

```
awplus# configure terminal
awplus(config)# vrrp vmac enable
```

To disable Virtual MAC enter:

```
awplus# configure terminal
awplus(config)# vrrp vmac disable
```

Related Commands virtual-ip

virtual-ipv6

Part 7: Network Management

47 Allied Telesis Management Framework™ (AMF) Commands

Introduction

Overview This chapter provides an alphabetical reference for Allied Telesis Management Framework™ (AMF) commands.

AMF master nodes Every AMF network must have at least one master node, which acts as the core of the AMF network. Not all AlliedWare Plus devices are capable of acting as an AMF master. See the AMF Feature Overview and Configuration Guide for information about AMF master support.

AMF edge CentreCOM® FS980M, GS900MX, GS970M, and XS900MX Series switches can only be used as edge switches in an AMF network. The full management power and convenience of AMF is available on these switches, but they can only link to one other AMF node. They cannot form cross-links or virtual links.

AMF naming convention When AMF is enabled on a device, it will automatically be assigned a host name. If a host name has already been assigned, by using the command hostname on page 225, this will remain. If however, no host name has been assigned, then the name applied will be the prefix, **host**_ followed (without a space) by the MAC address of the device. For example, a device whose MAC address is **0016.76b1.7a5e** will have the name **host_0016_76b1_7a5e** assigned to it.

To efficiently manage your network using AMF, we strongly advise that you devise a naming convention for your network devices, and accordingly apply an appropriate hostname to each device in your AMF network.

AMF and STP On AR-Series firewalls, you cannot use STP at the same time as AMF.

Command List

- "area-link" on page 2089
- "atmf area" on page 2091
- "atmf area password" on page 2093
- "atmf authorize" on page 2095
- "atmf authorize provision" on page 2097

- "atmf backup" on page 2099
- "atmf backup area-masters delete" on page 2100
- "atmf backup area-masters enable" on page 2101
- "atmf backup area-masters now" on page 2102
- "atmf backup area-masters synchronize" on page 2103
- "atmf backup bandwidth" on page 2104
- "atmf backup delete" on page 2105
- "atmf backup enable" on page 2106
- "atmf backup guests delete" on page 2107
- "atmf backup guests enable" on page 2108
- "atmf backup guests now" on page 2109
- "atmf backup guests synchronize" on page 2110
- "atmf backup now" on page 2111
- "atmf backup redundancy enable" on page 2113
- "atmf backup server" on page 2114
- "atmf backup stop" on page 2116
- "atmf backup synchronize" on page 2117
- "atmf cleanup" on page 2118
- "atmf container" on page 2119
- "atmf container login" on page 2120
- "atmf controller" on page 2121
- "atmf distribute firmware" on page 2122
- "atmf domain vlan" on page 2124
- "atmf enable" on page 2127
- "atmf group (membership)" on page 2128
- "atmf guest-class" on page 2130
- "atmf log-verbose" on page 2132
- "atmf management subnet" on page 2133
- "atmf management vlan" on page 2136
- "atmf master" on page 2138
- "atmf mtu" on page 2139
- "atmf network-name" on page 2140
- "atmf provision" on page 2141
- "atmf provision node clone" on page 2142
- "atmf provision node configure boot config" on page 2144

- "atmf provision node configure boot system" on page 2145
- "atmf provision node create" on page 2146
- "atmf provision node delete" on page 2148
- "atmf provision node license-cert" on page 2150
- "atmf provision node locate" on page 2152
- "atmf reboot-rolling" on page 2153
- "atmf recover" on page 2157
- "atmf recover guest" on page 2159
- "atmf recover led-off" on page 2160
- "atmf remote-login" on page 2161
- "atmf restricted-login" on page 2163
- "atmf secure-mode" on page 2165
- "atmf secure-mode certificate expire" on page 2167
- "atmf secure-mode certificate expiry" on page 2168
- "atmf secure-mode certificate renew" on page 2169
- "atmf secure-mode enable-all" on page 2170
- "atmf select-area" on page 2172
- "atmf topology-gui enable" on page 2173
- "atmf virtual-crosslink" on page 2174
- "atmf virtual-link" on page 2176
- "atmf working-set" on page 2178
- "bridge-group" on page 2180
- "clear atmf links statistics" on page 2181
- "clear atmf secure-mode certificates" on page 2182
- "clear atmf secure-mode statistics" on page 2183
- "debug atmf" on page 2184
- "debug atmf packet" on page 2186
- "discovery" on page 2189
- "description (amf container)" on page 2191
- "erase factory-default" on page 2192
- "http-enable" on page 2193
- "log event-host" on page 2195
- "modeltype" on page 2196
- "show atmf" on page 2197
- "show atmf area" on page 2201

- "show atmf area guests" on page 2204
- "show atmf area guests-detail" on page 2206
- "show atmf area nodes" on page 2208
- "show atmf area nodes-detail" on page 2210
- "show atmf area summary" on page 2212
- "show atmf authorization" on page 2213
- "show atmf backup" on page 2216
- "show atmf backup area" on page 2220
- "show atmf backup guest" on page 2222
- "show atmf container" on page 2224
- "show atmf detail" on page 2227
- "show atmf group" on page 2229
- "show atmf group members" on page 2231
- "show atmf guests" on page 2233
- "show atmf guests detail" on page 2235
- "show atmf links" on page 2238
- "show atmf links detail" on page 2240
- "show atmf links guest" on page 2249
- "show atmf links guest detail" on page 2251
- "show atmf links statistics" on page 2255
- "show atmf nodes" on page 2258
- "show atmf provision nodes" on page 2260
- "show atmf secure-mode" on page 2261
- "show atmf secure-mode audit" on page 2263
- "show atmf secure-mode audit link" on page 2264
- "show atmf secure-mode certificates" on page 2265
- "show atmf secure-mode sa" on page 2268
- "show atmf secure-mode statistics" on page 2271
- "show atmf tech" on page 2273
- "show atmf virtual-links" on page 2276
- "show atmf working-set" on page 2278
- "show debugging atmf" on page 2279
- "show debugging atmf packet" on page 2280
- "show running-config atmf" on page 2281
- "state" on page 2282

- "switchport atmf-agentlink" on page 2284
- "switchport atmf-arealink remote-area" on page 2285
- "switchport atmf-crosslink" on page 2287
- "switchport atmf-guestlink" on page 2289
- "switchport atmf-link" on page 2291
- "type atmf node" on page 2292
- "undebug atmf" on page 2295
- "username" on page 2296

area-link

Overview Use this command to create an area-link between a Virtual AMF Appliance (VAA) host controller and an AMF container.

An AMF container is an isolated instance of AlliedWare Plus with its own network interfaces, configuration, and file system. The features available inside an AMF container are a sub-set of the features available on the host VAA. These features enable the AMF container to function as a uniquely identifiable AMF master and allows for multiple tenants (up to 60) to run on a single VAA host. See the AMF Feature Overview and Configuration Guide for more information on running multiple tenants on a single VAA host.

Use the **no** variant of this command to remove an area-link from a container.

Syntax

```
area-link <area-name>
no area-link
```

Parameter	Description
<area-name>	AMF area name of the container's area.

Mode AMF Container Configuration

Usage The AMF area-link connects the AMF controller on a VAA host to the AMF container. Once a container has been created with the atmf container command and an area-link configured with the **area-link** command, it can be enabled using the state command.

You can only configure a single area-link on a container. You will see the following message if you try and configure a second one:

```
% AreaLink already configured for this container
```

Each container has two virtual interfaces:

- Interface eth0, used to connect to the AMF controller on the VAA host via an AMF area-link, configured using this area-link command.
- Interface eth1, used to connect to the outside world using a bridged L2 network link, configured using the bridge-group command.

See the AMF Feature Overview and Configuration_Guide for more information on these virtual interfaces and links.

Example To create the area-link to "wlg" on container "vac-wlg-1", use the commands:

```
awplus# configure terminal
awplus(config)# atmf container vac-wlg-1
awplus(config-atmf-container)# area-link wlg
```

To remove an area-link from container “vac-wlg-1”, use the commands:

```
awplus# configure terminal
awplus(config)# atmf container vac-wlg-1
awplus(config-atmf-container)# no area-link
```

Related Commands

atmf container

show atmf container

Command changes

Version 5.4.7-0.1: command added

atmf area

Overview This command creates an AMF area and gives it a name and ID number.

Use the **no** variant of this command to remove the AMF area.

This command is only valid on AMF controllers, master nodes and gateway nodes.

Syntax

```
atmf area <area-name> id <1-126> [local]
no atmf area <area-name>
```

Parameter	Description
<area-name>	The AMF area name. The area name can be up to 15 characters long. Valid characters are: a..z A..Z 0..9 - _ Names are case sensitive and must be unique within an AMF network. The name cannot be the word “local” or an abbreviation of the word “local” (such as “l”, “lo” etc.).
<1-126>	An ID number that uniquely identifies this area.
`local`	Set the area to be the local area. The local area contains the device you are configuring.

Mode Global Configuration

Usage This command enables you to divide your AMF network into areas. Each area is managed by at least one AMF master node. Each area can have up to 120 nodes, depending on the license installed on that area’s master node.

The whole AMF network is managed by up to 8 AMF controllers. Each AMF controller can communicate with multiple areas. The number of areas supported on a controller depends on the license installed on that controller.

You must give each area in an AMF network a unique name and ID number.

Only one local area can be configured on a device. You must specify a local area on each controller, remote AMF master, and gateway node.

Example To create the AMF area named *New-Zealand*, with an ID of 1, and specify that it is the local area, use the command:

```
controller-1(config)# atmf area New-Zealand id 1 local
```

To configure a remote area named *Auckland*, with an ID of 100, use the command:

```
controller-1(config)# atmf area Auckland id 100
```

Related Commands

atmf area password

show atmf area

show atmf area summary

show atmf area nodes

switchport atmf-arealink remote-area

atmf area password

Overview This command sets a password on an AMF area.

Use the **no** variant of this command to remove the password.

This command is only valid on AMF controllers, master nodes and gateway nodes. The area name must have been configured first.

Syntax

```
atmf area <area-name> password [8] <password>
no atmf area <area-name> password
```

Parameter	Description
<area-name>	The AMF area name.
8	This parameter is displayed in **show running-config** output to indicate that it is displaying the password in encrypted form. You should not enter **8** on the CLI yourself.
<password>	The password is between 8 and 32 characters long. It can include spaces.

Mode Global Configuration

Usage You must configure a password on each area that an AMF controller communicates with, except for the controller's local area. The areas must already have been created using the atmf area command.

Enter the password identically on both of:

- the area that locally contains the controller, and
- the remote AMF area masters

The command **show running-config atmf** will display the encrypted version of this password. The encryption keys will match between the controller and the remote AMF master.

If multiple controller and masters exist in an area, they must all have the same area configuration.

Example To give the AMF area named *Auckland* a password of "secure#1" use the following command on the controller:

```
controller-1(config)# atmf area Auckland password secure#1
```

and also use the following command on the master node for the Auckland area:

```
auck-master(config)# atmf area Auckland password secure#1
```

Related Commands

atmf area

show atmf area

show atmf area summary

show atmf area nodes

switchport atmf-arealink remote-area

atmf authorize

Overview On an AMF network, with secure mode enabled, use this command on an AMF master to authorize an AMF node to join the network. AMF nodes waiting to be authorized appear in the pending authorization queue, which can be examined using the show atmf authorization command with the **pending** parameter.

Use the **no** variant of this command to revoke authorization for an AMF node on an AMF master.

Syntax

```
atmf authorize {<node-name> [area <area-name>]|all-pending}
no atmf authorize <node-name> [area <area-name>]
```

Parameter	Description
<node-name>	The name of the node to be authorized or have its authorization revoked.
area	Specify an AMF area.
<area-name>	This is the name of the area the node belongs to.
all-pending	Authorize all nodes in the pending queue.

Mode Privileged Exec

Usage On an AMF controller, AMF remote-area masters must be authorized by the controller, and the AMF remote-area masters will also need to authorized access from the AMF controller.

Example To authorize all AMF nodes in the pending authorization queue on an AMF master, use the command:

```
awplus# atmf authorize all-pending
```

To authorize a node called “node2” in remote AMF area “area3”, use the command:

```
awplus# atmf authorize node2 area “area3”
```

To authorize a node called “node4” on an AMF master, use the command:

```
awplus# atmf authorize node4
```

To revoke authorization for a node called “node4” on an AMF master, use the command:

```
awplus# no atmf authorize node4
```

Related Commands

atmf secure-mode

clear atmf secure-mode certificates

show atmf authorization

show atmf secure-mode

show atmf secure-mode certificates

show atmf secure-mode statistics

Command changes Version 5.4.7-0.3: command added

atmf authorize provision

Overview Use this command from an AMF controller or AMF master to pre-authorize a node on an AMF network running in secure mode. This allows a node to join the AMF network the moment the atmf secure-mode command is run on that node.

Use the **no** variant of this command to remove a provisional authorization from and AMF controller or AMF master.

Syntax

```
atmf authorize provision [timeout <minutes>] node <node-name>
interface <interface-name> [area <area-name>]
atmf authorize provision [timeout <minutes>] mac <mac-address>
atmf authorize provision [timeout <minutes>] all
no atmf authorize provision node <node-name> interface
<interface-name> [area <area-name>]
no atmf authorize provision mac <mac-address>
no atmf authorize provision all
```

Parameter	Description
`timeout`	Timeout for provisional authorization. Authorization for provisioned nodes expires after the timeout period specified.
<minutes>	Timeout in minutes. A value between 1 and 6000 is permissible with the default being 60 minutes.
`node`	Specify a node to provision by node name.
<node-name>	The name of the node to provisionally authorize.
`interface`	Specify the interface the node will connect on.
<interface-name>	The name of the interface, this can be a switchport, link aggregator, LACP link, or virtual link.
`area`	Specify the AMF area.
<area-name>	This is the name of the area the node belongs to.
`mac`	Specify a node to provision by MAC address.
<mac-address>	Enter a MAC address to provisionally authorize in the format HHHH.HHHH.HHHH.
`all`	Provision authorization for all secure mode capable nodes.

Default The default timeout is 60 minutes.

Mode Privileged Exec

Example To provisionally authorize all non-secure AMF nodes, use the command:

```
awplus# atmf authorize provision all
```

To authorize a node with a MAC address of 0000.cd28.0880 for 2 hours, use the command:

```
awplus# authorize provision timeout 120 mac 0000.cd28.0880
```

To remove all provisional authorization, on an AMF master, use the command:

```
awplus# no atmf authorize provision all
```

Related Commands

show atmf authorization

show atmf secure-mode

Command changes

Version 5.4.7-0.3: command added

atmf backup

Overview This command can only be applied to a master node. It manually schedules an AMF backup to start at a specified time and to execute a specified number of times per day.

Use the **no** variant of this command to disable the schedule.

Syntax

```
atmf backup {default|<hh:mm> frequency <1-24>}
```

Parameter	Description
`default`	Restore the default backup schedule.
`<hh:mm>`	Sets the time of day to apply the first backup, in hours and minutes. Note that this parameter uses the 24 hour clock.
`backup`	Enables AMF backup to external media.
`frequency <1-24>`	Sets the number of times within a 24 hour period that backups will be taken.

Default Backups run daily at 03:00 AM, by default

Mode Global Configuration

Usage Running this command only configures the schedule. To enable the schedule, you should then apply the command atmf backup enable.

We recommend using the ext3 or ext4 filesystem on external media that are used for AMF backups.

Example To schedule backup requests to begin at 11 am and execute twice per day (11 am and 11 pm), use the following command:

```
node_1# configure terminal
node_1(config)# atmf backup 11:00 frequency 2
```

CAUTION: *File names that comprise identical text, but with differing case, such as Test.txt and test.txt, will not be recognized as being different on FAT32 based backup media such as a USB storage device. However, these filenames will be recognized as being different on your Linux based device. Therefore, for good practice, ensure that you apply a consistent case structure for your back-up file names.*

Related Commands

atmf backup enable

atmf backup stop

show atmf backup

atmf backup area-masters delete

Overview Use this command to delete from external media, a backup of a specified node in a specified area.

Note that this command can only be run on an AMF controller.

Syntax

```
atmf backup area-masters delete area <area-name> node
<node-name>
```

Parameter	Description
<area-name>	The area that contains the node whose backup will be deleted.
<node-name>	The node whose backup will be deleted.

Mode Privileged Exec

Example To delete the backup of the remote area-master named “well-gate” in the AMF area named Wellington, use the command:

```
controller-1# atmf backup area-masters delete area Wellington
node well-gate
```

Related Commands show atmf backup area

atmf backup area-masters enable

Overview Use this command to enable backup of remote area-masters from the AMF controller. This command is only valid on AMF controllers.

Use the **no** form of the command to stop backups of remote area-masters.

Syntax

```
atmf backup area-masters enable
no atmf backup area-masters enable
```

Mode Global configuration

Default Remote area backups are disabled by default

Usage Use the following commands to configure the remote area-master backups:

- atmf backup to configure when the backups begin and how often they run
- atmf backup server to configure the backup server.

We recommend using the ext3 or ext4 filesystem on external media that are used for AMF backups.

Example To enable scheduled backups of AMF remote area-masters, use the commands:

```
controller-1# configure terminal
controller-1(config)# atmf backup area-masters enable
```

To disable scheduled backups of AMF remote area-masters, use the commands:

```
controller-1# configure terminal
controller-1(config)# no atmf backup area-masters enable
```

Related Commands

atmf backup server

atmf backup

show atmf backup area

atmf backup area-masters now

Overview Use this command to run an AMF backup of one or more remote area-masters from the AMF controller immediately.

This command is only valid on AMF controllers.

Syntax

```
atmf backup area-masters now [area <area-name>|area <area-name>
node <node-name>]
```

Parameter	Description
<area-name>	The area whose area-masters will be backed up.
<node-name>	The node that will be backed up.

Mode Privileged Exec

Example To back up all local master nodes in all areas controlled by controller-1, use the command

```
controller-1# atmf backup area-masters now
```

To back up all local masters in the AMF area named Wellington, use the command

```
controller-1# atmf backup area-masters now area Wellington
```

To back up the local master “well-master” in the Wellington area, use the command

```
controller-1# atmf backup area-masters now area Wellington node
well-master
```

Related Commands

atmf backup area-masters enable

atmf backup area-masters synchronize

show atmf backup area

atmf backup area-masters synchronize

Overview Use this command to synchronize backed-up area-master files between the active remote file server and the backup remote file server. Files are copied from the active server to the remote server.

Note that this command is only valid on AMF controllers.

Syntax

```
atmf backup area-masters synchronize
```

Mode Privileged Exec

Example To synchronize backed-up files between the remote file servers for all area-masters, use the command:

```
controller-1# atmf backup area-masters synchronize
```

Related Commands

atmf backup area-masters enable

atmf backup area-masters now

show atmf backup area

atmf backup bandwidth

Overview This command sets the maximum bandwidth in kilobytes per second (kBps) available to the AMF backup process. This command enables you to restrict the bandwidth that is utilized for downloading file contents during a backup.

NOTE: *This command will only run on an AMF master. An error message will be generated if the command is attempted on node that is not a master.*

Also note that setting the bandwidth value to zero will allow the transmission of as much bandwidth as is available, which can exceed the maximum configurable speed of 1000 kBps. In effect, zero means unlimited.

Use the **no** variant of this command to reset (to its default value of zero) the maximum bandwidth in kilobytes per second (kBps) available when initiating an AMF backup. A value of zero tells the backup process to transfer files using unlimited bandwidth.

Syntax

```
atmf backup bandwidth <0-1000>
no atmf backup bandwidth
```

Parameter	Description
<0-1000>	Sets the bandwidth in kilobytes per second (kBps)

Default The default value is zero, allowing unlimited bandwidth when executing an AMF backup.

Mode Global Configuration

Examples To set an atmf backup bandwidth of 750 kBps, use the commands:

```
node2# configure terminal
node2(config)# atmf backup bandwidth 750
```

To set the AMF backup bandwidth to the default value for unlimited bandwidth, use the commands:

```
node2# configure terminal
node2(config)# no atmf backup bandwidth
```

Related Commands show atmf backup

atmf backup delete

Overview This command removes the backup file from the external media of a specified AMF node.

Note that this command can only be run from an AMF master node.

Syntax

```
atmf backup delete <node-name>
```

Parameter	Description
<node-name>	The AMF node name of the backup file to be deleted.

Mode Privileged Exec

Example To delete the backup file from node2, use the following command:

```
Node_1# atmf backup delete node2
```

Related Commands

show atmf backup

atmf backup now

atmf backup stop

atmf backup enable

Overview This command enables automatic AMF backups on the AMF master node that you are connected to. By default, automatic backup starts at 3:00 AM. However, this schedule can be changed by the atmf backup command. Note that backups are initiated and stored only on the master nodes.

Use the **no** variant of this command to disable any AMF backups that have been scheduled and previously enabled.

Syntax

```
atmf backup enable
no atmf backup enable
```

Default Automatic AMF backup functionality is enabled on the AMF master when it is configured and external media, i.e. an SD card or a USB storage device or remote server, is detected.

Mode Global Configuration

Usage A warning message will appear if you run the atmf backup enable command with either insufficient or marginal memory availability on your external storage device.

You can use the command show atmf backup on page 2216 to check the amount of space available on your external storage device.

We recommend using the ext3 or ext4 filesystem on external media that are used for AMF backups.

Example To turn on automatic AMF backup, use the following command:

```
AMF_Master_1# configure terminal
AMF_Master_1(config)# atmf backup enable
```

Related Commands

show atmf

show atmf backup

atmf backup

atmf backup now

atmf enable

atmf backup guests delete

Overview This command removes a guest node's backup files from external media such as a USB drive, SD card, or an external file server.

Syntax

```
atmf backup guests delete <node-name> <guest-port>
```

Parameter	Description
<node-name>	The name of the guest's parent node.
<guest-port>	The port number on the parent node.

Mode User Exec/Privileged Exec

Example On a parent node named "node1" (which, in this case, the user has a direct console connection to) use the following command to remove the backup files of the guest node that is directly connected to port1.0.3.

```
node1# atmf backup guests delete node1 port1.0.3
```

Related Command

atmf backup delete

atmf backup area-masters delete

show atmf backup guest

atmf backup guests enable

Overview Use this command to enable backups of remote guest nodes from an AMF master.

Use the **no** variant of this command to disable the ability of the guest nodes to be backed up.

Syntax

```
atmf backup guests enable
no atmf backup guests enable
```

Default Guest node backups are enabled by default.

Mode Global Config

Usage We recommend using the ext3 or ext4 filesystem on external media that are used for AMF backups.

Example On the AMF master node, enable all scheduled guest node backups:

```
atmf-master# configure terminal
atmf-master(config)# atmf backup guests enable
```

Related Commands

atmf backup area-masters enable

show atmf backup guest

atmf backup guests synchronize

atmf backup guests now

Overview This command manually triggers an AMF backup of guest nodes on a AMF Master.

Syntax

```
atmf backup guests now [<node-name>] [<guest-port>]
```

Parameter	Description
<node-name>	The name of the guest's parent node.
<guest-port>	The port number that connects to the guest node.

Default N/A

Mode Privileged Exec

Example Use the following command to manually trigger the backup of all guests in the AMF network

```
awplus# atmf backup guests now
```

Example To manually trigger the backup of a guest node connected to port 1.0.23 of node1, use the following command:

```
awplus# atmf backup guests now node1 port1.0.23
```

Related Commands show atmf backup guest

atmf backup guests synchronize

Overview This command initiates a manual synchronization of all guest backup file-sets across remote file servers and various redundancy backup media, such as USB storage devices. This facility ensures that each device contains the same backup image files. Note that this backup synchronization process will occur as part of the regular backups scheduled by the atmf backup command.

Syntax
```
atmf backup guests synchronize
```

Default N/A

Mode User Exec/Privileged Exec

Example To synchronize backups across remote file servers and storage devices, use the command:

```
Node1#atmf backup guests synchronize
```

Related Commands atmf backup redundancy enable

show atmf guests

atmf backup guests enable

atmf backup now

Overview This command initiates an immediate AMF backup of either all AMF members, or a selected AMF member. Note that this backup information is stored in the external media on the master node of the device on which this command is run, even though the selected AMF member may not be a master node.

Note that this command can only be run on an AMF master node.

Syntax

```
atmf backup now [<nodename>]
```

Parameter	Description
<nodename> or *<hostname>*	The name of the AMF member to be backed up, as set by the command hostname on page 225. Where no name has been assigned to this device, then you must use the default name, which is the word "host", then an underscore, then (without a space) the MAC address of the device to be backed up. For example host_0016_76b1_7a5e. Note that the node-name appears as the command Prompt when in Privileged Exec mode.

Default A backup is initiated for all nodes on the AMF (but stored on the master nodes).

Mode Privileged Exec

Usage Although this command will select the AMF node to be backed-up, it can only be run from any AMF master node.

NOTE: *The backup produced will be for the selected node but the backed-up config will reside on the external media of the AMF master node on which the command was run. However, this process will result in the information on one master being more up-to-date. To maintain concurrent backups on both masters, you can apply the backup now command to the master working-set. This is shown in Example 4 below.*

Example 1 In this example, an AMF member has not been assigned a host name. The following command is run on the AMF_Master_2 node to immediately backup the device that is identified by its MAC address of 0016.76b1.7a5e:

```
AMF_Master_2# atmf backup now host_0016_76b1_7a5e
```

NOTE: *When a host name is derived from its MAC address, the syntax format entered changes from XXXX.XXXX.XXXX to XXXX_XXXX_XXXX.*

Example 2 In this example, an AMF member has the host name, **office_annex**. The following command will immediately backup this device:

```
AMF_Master_2# atmf backup now office_annex
```

This command is initiated on the device's master node named **AMF_Master_2** and initiates an immediate backup on the device named **office_annex**.

Example 3 To initiate from AMF_master_1 an immediate backup of all AMF member nodes, use the following command:

```
AMF_Master_1# amf backup now
```

Example 4 To initiate an immediate backup of the node with the host-name “office_annex” and store the configuration on both masters, use the following process:

From the AMF_master_1, set the working-set to comprise only of the automatic group, master nodes.

```
AMF_Master_1# atmf working-set group master
```

This command returns the following display:

```
============================
AMF_Master_1, AMF_Master_2
============================

Working set join
```

Backup the AMF member with the host name, **office_annex** on both the master nodes as defined by the working set.

```
AMF_Master[2]# atmf backup now office_annex
```

Note that the [2] shown in the command prompt indicates a 2 node working-set.

Related Commands

atmf backup

atmf backup stop

hostname

show atmf backup

atmf backup redundancy enable

Overview This command is used to enable or disable AMF backup redundancy.

Syntax

```
atmf backup redundancy enable
no atmf backup redundancy enable
```

Default Disabled

Mode Global Configuration

Usage If the AMF Master or Controller supports any removable media (SD card/USB), it uses the removable media as the redundant backup for the AMF data backup.

This feature is valid only if remote file servers are configured on the AMF Master or Controller.

We recommend using the ext3 or ext4 filesystem on external media that are used for AMF backups.

Example To enable AMF backup redundancy, use the commands:

```
awplus# configure terminal
awplus(config)# atmf backup redundancy enable
```

To disable AMF backup redundancy, use the commands:

```
awplus# configure terminal
awplus(config)# no atmf backup redundancy enable
```

Related Commands

atmf backup synchronize

show atmf backup

show atmf backup area

atmf backup server

Overview This command configures remote file servers as the destination for AMF backups.

Use the **no** variant of this command to remove the destination server(s). When all servers are removed the system will revert to backup from external media.

Syntax

```
atmf backup server id {1|2} <hostlocation> username <username>
[path <path>|port <1-65535>]
```

```
no atmf backup server id {1|2}
```

Parameter	Description
`id`	Remote server backup server identifier.
`{1|2}`	The backup server identifier number (1 or 2). Note that there can be up to two backup servers, numbered 1 and 2 respectively, and you would need to run this command separately for each server.
<hostlocation>	Either the name or the IP address (IPv4 or IPv6) of the selected backup server (1 or 2).
`username`	Configure the username to log in with on the selected remote file server.
<username>	The selected remote file server's username.
`path`	The location of the backup files on the selected remote file server. By default this will be the home directory of the username used to log in with.
<path>	The directory path utilized to store the backup files on the selected remote file server. No spaces are allowed in the path.
`port`	The connection to the selected remote backup file server using SSH. By default SSH connects to a device on TCP port 22 but this can be changed with this command.
`<1-65535>`	A TCP port within the specified range.

Defaults Remote backup servers are not configured. The default SSH TCP port is 22. The path utilized on the remote file server is the home directory of the username.

Mode Global Exec

Usage The hostname and username parameters must both be configured.

Examples To configure server 1 with an IPv4 address and a username of *backup1*, use the commands:

```
AMF_Master_1# configure terminal
```

```
AMF_Master_1(config)# atmf backup server id 1 192.168.1.1
username backup1
```

To configure server 1 with an IPv6 address and a username of *backup1*, use the command:

```
AMF_backup1_1# configure terminal
AMF_Master_1(config)# atmf backup server id 1 FFEE::01 username backup1
```

To configure server 2 with a hostname and username, use the command:

```
AMF_Master_1# configure terminal
AMF_Master_1(config)# atmf backup server id 2 www.example.com username backup2
```

To configure server 2 with a hostname and username in addition to the optional path and port parameters, use the command:

```
AMF_Master_1# configure terminal
AMF_Master_1(config)# atmf backup server id 2 www.example.com username backup2 path tokyo port 1024
```

To unconfigure the AMF remote backup file server 1, use the command:

```
AMF_Master_1# configure terminal
AMF_Master_1(config)# no atmf backup server id 1
```

Related Commands show atmf backup

atmf backup stop

Overview Running this command stops a backup that is currently running on the master node you are logged onto. Note that if you have two masters and want to stop both, then you can either run this command separately on each master node, or add both masters to a working set, and issue this command to the working set.

Note that this command can only be run on a master node.

Syntax

```
atmf backup stop
```

Mode Privileged Exec

Usage This command is used to halt an AMF backup that is in progress. In this situation the backup process will finish on its current node and then stop.

Example To stop a backup that is currently executing on master node node-1, use the following command:

```
AMF_Master_1# amf backup stop
```

Related Commands

atmf backup

atmf backup enable

atmf backup now

show atmf backup

atmf backup synchronize

Overview For the master node you are connected to, this command initiates a system backup of files from the node's active remote file server to its backup remote file server. Note that this process happens automatically each time the network is backed up.

Note that this command can only be run from a master node.

Syntax

```
atmf backup synchronize
```

Mode Privileged Exec

Example When connected to the master node AMF_Master_1, the following command will initiate a backup of all system related files from its active remote file server to its backup remote file server.

```
AMF_Master_1# atmf backup synchronize
```

Related Commands

atmf backup enable

atmf backup redundancy enable

show atmf

show atmf backup

atmf cleanup

Overview This command erases all data from NVS and all data from Flash **excluding** the following:

- the current release file
- the backup release file
- license files

It then reboots to put the device in a clean state ready to be used as a replacement node on a provisioned port.

Syntax

```
atmf cleanup
```

Mode Privileged Exec

Usage This command is an alias to the erase factory-default command.

Example To erase data, use the command:

```
Node_1# atmf cleanup
```

```
This command will erase all NVS, all flash contents except for
the boot release, and any license files, and then reboot the
switch. Continue? (y/n):y
```

Related Commands erase factory-default

atmf container

Overview Use this command to create or update an AMF container on a Virtual AMF Appliance (VAA) virtual machine.

An AMF container is an isolated instance of AlliedWare Plus with its own network interfaces, configuration, and file system. The features available inside an AMF container are a sub-set of the features available on the host VAA. These features enable the AMF container to function as a uniquely identifiable AMF master and allows for multiple tenants (up to 60) to run on a single VAA host. See the AMF Feature Overview and Configuration Guide for more information on running multiple tenants on a single VAA host.

Use the **no** variant of this command to remove an AMF container.

Syntax

```
atmf container <container-name>
no atmf container <container-name>
```

Parameter	Description
<container-name>	The name of the AMF container to create, update, or remove.

Mode AMF Container Configuration

Usage You cannot delete a container while it is still running. First use the **state disable** command to stop the container.

Examples To create or update the AMF container “vac-wlg-1”, use the commands:

```
awplus# configure terminal
awplus(config)# atmf container vac-wlg-1
awplus(config-atmf-container)#
```

To remove the AMF container “vac-wlg-1”, use the commands:

```
awplus# configure terminal
awplus(config)# no atmf container vac-wlg-1
```

Related Commands

area-link

atmf container login

bridge-group

description (amf container)

show atmf container

state

Command changes Version 5.4.7-0.1: command added

atmf container login

Overview Use this command to login to an AMF container on a Virtual AMF Appliance (VAA).

An AMF container is an isolated instance of AlliedWare Plus with its own network interfaces, configuration, and file system. The features available inside an AMF container are a sub-set of the features available on the host VAA. These features enable the AMF container to function as a uniquely identifiable AMF master and allows for multiple tenants (up to 60) to run on a single VAA host. See the AMF Feature Overview and Configuration Guide for more information on running multiple tenants on a single VAA host.

Syntax

```
atmf container login <container-name>
```

Parameter	Description
<container-name>	The name of the AMF container you wish to login into.

Mode Privileged Exec

Usage If you try to login to a AMF container that has not been created, or is not running, you will see the following message:

```
% Container does not exist or is not running.
```

To exit from a container and return to the host VAA press <Ctrl+a q>.

Example To login to container “vac-wlg-1”, use the command:

```
awplus# atmf container login vac-wlg-1
```

You will then be presented with a login screen for that container:

```
Connected to tty 1
Type <Ctrl+a q> to exit the console, <Ctrl+a Ctrl+a> to enter Ctrl+a itself

vac-wlg-1 login: manager
Password: friend

AlliedWare Plus (TM) 5.4.7 02/03/17 08:46:12

vac-wlg-1>
```

Related Commands atmf container

show atmf container

Command changes Version 5.4.7-0.1: command added

atmf controller

Overview Use this command to configure the device as an AMF controller. This enables you to split a large AMF network into multiple areas.

AMF controller is a licensed feature. The number of areas supported on a controller depends on the license installed on that controller.

Use the **no** variant of this command to remove the AMF controller functionality.

Syntax

```
atmf controller
no atmf controller
```

Mode Global configuration

Usage If a valid AMF controller license is not available on the device, the device will accept this command but will not act as a controller until you install a valid license. The following message will warn you of this:

"An AMF Controller license must be installed before this feature will become active"

NOTE: *If the AMF controller functionality is removed from a device using the* ***no atmf controller*** *command then the device must be rebooted if it is to function properly as an AMF master.*

Example To configure the node named *controller-1* as an AMF controller, use the commands:

```
controller-1# configure terminal
controller-1(config)# atmf controller
```

To stop the node named *controller-1* from being an AMF controller, use the commands:

```
controller-1# configure terminal
controller-1(config)# no atmf controller
```

Related Commands atmf area

show atmf

atmf distribute firmware

Overview This command can be used to upgrade software one AMF node at a time. A URL can be selected from any media location. The latest compatible release for a node will be selected from this location.

Several procedures are performed to ensure the upgrade will succeed. This includes checking the current node release boots from flash. If there is enough space on flash the software release is copied to flash on the new location.

The new release name is updated using the boot system command. The old release will become the backup release file. If a release file exists in a remote device (such as TFTP or HTTP, for example) then the URL should specify the exact release filename without using a wild card character.

The command will continue to upgrade software until all nodes are upgraded. At the end of the upgrade cycle the command should be used on the working-set.

Syntax

```
atmf distribute firmware <filename>
```

Parameter	Description
<filename>	The filename and path of the file. See the File Management Feature Overview and Configuration Guide for valid syntax.

Mode Privileged Exec

Examples To upgrade nodes in a AMF network with a predefined AMF group called “teams”, use the following commands:

```
Team1# atmf working-set group teams
```

```
============================
Team1, Team2, Team3:
============================
Working set join
```

```
ATMF_NETWORK[3]# atmf distribute firmware card:*.rel
```

```
Retrieving data from Team1
Retrieving data from Team2
Retrieving data from Team3

ATMF Firmware Upgrade:

Node Name          New Release File           Status
-----------------------------------------------------------------
Team1              x510-5.4.7-1.1.rel         Release ready
Team2              x930-5.4.7-1.1.rel         Release ready
Team3              x930-5.4.7-1.1.rel         Release ready
Continue the rolling reboot ? (y/n):y
=================================================================
Copying Release    : x510-5.4.7-1.1.rel to Team1
Updating Release   : x510-5.4.7-1.1.rel information on Team1
=================================================================
Copying Release    : x930-5.4.7-1.1.rel to Team2
Updating Release   : x930-5.4.7-1.1.rel information on Team2
=================================================================
Copying Release    : x930-5.4.7-1.1.rel to Team3
Updating Release   : x930-5.4.7-1.1.rel information on Team3

=================================================================
New firmware will not take effect until nodes are rebooted.
=================================================================

ATMF_NETWORK[3]#
```

Related Commands atmf working-set

atmf domain vlan

Overview The AMF domain VLAN is created when the AMF network is first initiated and is assigned a default VID of 4091. This command enables you to change the VID from this default value on this device.

The AMF domain VLAN is one of AMF's internal VLANs (the management VLAN is the other internal VLAN). AMF uses these internal VLANs to communicate network status information between nodes. These VLANs must be reserved for AMF and not used for other purposes.

An important point conceptually is that although the domain VLAN exists globally across the AMF network, it is assigned separately to each domain. The AMF network therefore can be thought of as comprising a series of domain VLANs each having the same VID and each being applied to a horizontal slice (domain) of the AMF. It follows therefore that the domain VLANs are only applied to ports that form cross-links and not to ports that form uplinks/downlinks.

CAUTION: *Every member of your AMF network must have the same domain VLAN, management VLAN, and management subnet.*

CAUTION: *If you change the domain VLAN, management VLAN, or management subnet of a node, that change takes effect immediately and the node will immediately leave the AMF network and try to rejoin it. The AMF network will not be complete until you have given all devices the same setting, so they can all rejoin the AMF network.*

Use the **no** variant of this command to reset the VLAN ID to its default value of 4091.

Syntax

```
atmf domain vlan <2-4090>
no atmf domain vlan
```

Parameter	Description
<2-4090>	The VLAN number in the range 2 to 4090.

Default VLAN 4091

Mode Global Configuration

Usage We recommend you only change the domain VLAN when first creating the AMF network, and only if VLAN 4091 is already being used in your network.

However, if you do need to change the VLAN on an existing AMF network, use the following steps:

1) Create a working set of the whole of your AMF network, using the commands:

```
master# atmf working-set group all
```

You must use **working-set group all** if changing the domain VLAN. If you use a different working-set, nodes that are not in that working-set will lose contact with the AMF network.

2) The prompt will display the number of nodes in the AMF network. Record this number. In this example, the network is named "test" and has 10 nodes:

```
test[10]#
```

3) Enter the new VLAN ID, using the commands:

```
test[10]# configure terminal
test(config)[10]# atmf domain vlan <2-4090>
```

The nodes will execute the command in parallel, leave the AMF network, and attempt to rejoin through the new VLAN.

4) Create the working set again, using the commands:

```
master(config)# exit
master# atmf working-set group all
```

5) Save the configuration, using the command:

```
test[10]# write
```

6) The prompt will display the number of nodes in the AMF network. Check that this is the same as the number in step 1. If it is not, you will need to change the VLAN on missing devices by logging into their consoles directly.

NOTE: *The domain VLAN will automatically be assigned an IP subnet address based on the value configured by the command atmf management subnet.*

The default VLAN ID lies outside the user-configurable range. If you need to reset the VLAN to the default VLAN ID, use the **no** variant of this command to do so.

Examples

To change the AMF domain VLAN to 4090 in an existing AMF network, use the following commands:

```
master# atmf working-set group all
test[10]# configure terminal
test(config)[10]# atmf domain vlan 4090
master(config)# exit
master# atmf working-set group all
test[10]# write
```

To reset the AMF domain VLAN to its default of 4091in an existing AMF network, use the following commands:

```
master# atmf working-set group all
test[10]# configure terminal
test(config)[10]# no atmf domain vlan
master(config)# exit
master# atmf working-set group all
test[10]# write
```

Related commands

atmf management subnet

atmf management vlan

atmf enable

Overview This command manually enables (turns on) the AMF feature for the device being configured.

Use the **no** variant of this command to disable (turn off) the AMF feature on the member node.

Syntax

```
atmf enable
no atmf enable
```

Default Once AMF is configured, the AMF feature starts automatically when the device starts up.

Mode Global Configuration

Usage The device does not auto negotiate AMF domain specific settings such as the Network Name. You should therefore, configure your device with any domain specific (non default) settings before enabling AMF.

Examples To turn off AMF, use the command:

```
MyNode# config terminal
MyNode(config)# no atmf enable
```

To turn on AMF, use the command:

```
MyNode(config)# atmf enable
```

This command returns the following display:

```
% Warning: The ATMF network config has been set to enable
% Save the config and restart the system for this change to take
effect.
```

atmf group (membership)

Overview This command configures a device to be a member of one or more AMF groups. Groups exist in three forms: Implicit Groups, Automatic Groups, and User-defined Groups.

- Implicit Groups
  - all: All nodes in the AMF
  - current: The current working-set
  - local: The originating node.

Note that the Implicit Groups do not appear in show group output.

- Automatic Groups - These are defined by hardware architecture, e.g. x510, x230, x8100, AR3050S, AR4050S.
- User-defined Groups - These enable you to define arbitrary groups of AMF members based on your own criteria.

Each node in the AMF is automatically assigned membership to the implicit groups, and the automatic groups that are appropriate to its node type, e.g. x230, PoE. Similarly, nodes that are configured as masters are automatically assigned to the master group.

Use the **no** variant of this command to remove the membership.

Syntax

```
atmf group <group-list>
no atmf group <group-list>
```

Parameter	Description
<group-list>	A list of group names. These should be entered as a comma delimited list without spaces. Names can contain alphanumeric characters, hyphens and underscores.

Mode Global Configuration

Usage You can use this command to define your own arbitrary groups of AMF members based on your own network's configuration requirements. Applying a node to a non existing group will result in the group automatically being created.

Note that the master nodes are automatically assigned to be members of the pre-existing master group.

The following example configures the device to be members of three groups; two are company departments, and one comprises all devices located in building_2. To avoid having to run this command separately on each device that is to be added to these groups, you can remotely assign all of these devices to a working-set, then use the capabilities of the working-set to apply the atmf group (membership) command to all members of the working set.

Example 1 To specify the device to become a member of AMF groups named *marketing*, *sales*, and *building_2*, use the following commands:

```
node-1# configure terminal
node-1(config)# atmf group marketing,sales,building_2
```

Example 2 To add the nodes *member_node_1* and *member_node_2* to groups *building1* and *sales*, first add the nodes to the working-set:

```
master_node# atmf working-set member_node_1,member_node_2
```

This command returns the following output confirming that the nodes *member_node_1* and *member_node_2* are now part of the working-set:

```
============================
member_node_1, member_node_2
============================

Working set join
```

Then add the members of the working set to the groups:

```
atmf-net[2]# configure terminal
atmf-net[2](config)# atmf group building1,sales
atmf-net[2](config)# exit
atmf-net[2]# show atmf group
```

This command returns the following output displaying the groups that are members of the working-set.

```
====================
member_node_1
====================

AMF group information

building1, sales
```

Related Commands

show atmf group

show atmf group members

atmf guest-class

Overview This modal command creates a guest-class. Guest-classes are modal templates that can be applied to selected guest types. Once you have created a guest-class, you can select it by entering its mode. From here, you can then configure a further set of operational settings specifically for the new guest-class. These settings can then all be applied to a guest link by running the switchport atmf-guestlink command. The following settings can be configured from each guest class mode:

- discovery method
- model type
- http-enable setting
- guest port, user name, and password

The **no** variant of this command removes the guest-class. Note that you cannot remove a guest-class that is assigned to a port.

Syntax

```
atmf guest-class <guest-class-name>
no atmf guest-class
```

Parameter	Description
<guest-class-name>	The name assigned to the guest-class type. This can be chosen from an arbitrary string of up to 15 characters.

Mode Interface

Example 1 To create a guest-class named **camera** use the following commands:

```
node1# configure terminal
node1(config)# atmf guest-class camera
node1(config-atmf-guest)# end
```

Example 2 To remove the guest-class named **phone** use the following commands:

```
node1# configure terminal
node1(config)# no atmf guest-class phone
node1(config-atmf-guest)# end
```

Related Commands

show atmf area guests

discovery

http-enable

username

modeltype

switchport atmf-guestlink

show atmf links guest

show atmf guests

atmf log-verbose

Overview This command limits the number of log messages displayed on the console or permanently logged.

Use the **no** variant of this command to reset to the default.

Syntax

```
atmf log-verbose <1-3>
no atmf log-verbose
```

Parameter	Description
<1-3>	The verbose limitation (3 = noisiest, 1 = quietest)

Default The default log display is 3.

Usage This command is intended for use in large networks where verbose output can make the console unusable for periods of time while nodes are joining and leaving.

Mode Global Configuration

Example To set the log-verbose to noise level 2, use the command:

```
node-1# configure terminal
node-1(config)# atmf log-verbose 2
```

Validation Command show atmf

atmf management subnet

Overview This command is used to assign a subnet that will be allocated to the AMF management and domain management VLANs. From the address space defined by this command, two subnets are created, a management subnet component and a domain component, as explained in the Usage section below.

AMF uses these internal IPv4 subnets to communicate network status information between nodes. These subnet addresses must be reserved for AMF and not used for other purposes.

CAUTION: *Every member of your AMF network must have the same domain VLAN, management VLAN, and management subnet.*

CAUTION: *If you change the domain VLAN, management VLAN, or management subnet of a node, that change takes effect immediately and the node will immediately leave the AMF network and try to rejoin it. The AMF network will not be complete until you have given all devices the same setting, so they can all rejoin the AMF network.*

Use the **no** variant of this command to remove the assigned subnet.

Syntax

```
atmf management subnet <a.b.0.0>
no atmf management subnet
```

Parameter	Description
<a.b.0.0>	The IP address selected for the management subnet. Because a mask of 255.255.0.0 (i.e. /16) will be applied automatically, an IP address in the format a.b.0.0 must be selected. Usually this subnet address is selected from an appropriate range from within the private address space of 172.16.0.0 to 172.31.255.255, or 192.168.0.0, as defined in RFC1918.

Default 172.31.0.0. A subnet mask of 255.255.0.0 will automatically be applied.

Mode Global Configuration

Usage Running this command will result in the creation of a further two subnets (within the class B address space assigned) and the mask will extend from /16 to /17.

For example, if the management subnet is assigned the address 172.31.0.0/16, this will result in the automatic creation of the following two subnets:

- 172.31.0.0/17 assigned to the atmf management vlan
- 172.31.128.0/17 assigned to the atmf domain vlan.

We recommend you only change the management subnet when first creating the AMF network, and only if 172.31.0.0 is already being used in your network.

However, if you do need to change the subnet on an existing AMF network, use the following steps:

1) Create a working set of the whole of your AMF network, using the commands:

```
master# atmf working-set group all
```

You must use **working-set group all** if changing the domain VLAN, management VLAN, or management subnet. If you use a different working-set, nodes that are not in that working-set will lose contact with the AMF network.

2) The prompt will display the number of nodes in the AMF network. Record this number. In this example, the network is named "test" and has 10 nodes:

```
test[10]#
```

3) Enter the new subnet address, using the commands:

```
test[10]# configure terminal
test(config)[10]# atmf management subnet <a.b.0.0>
```

The nodes will execute the command in parallel, leave the AMF network, and attempt to rejoin through the new subnet.

4) Create the working set again, using the commands:

```
master(config)# exit
master# atmf working-set group all
```

5) Save the configuration, using the command:

```
test[10]# write
```

6) The prompt will display the number of nodes in the AMF network. Check that this is the same as the number in step 1. If it is not, you will need to change the subnet on missing devices by logging into their consoles directly.

Examples To change the AMF management subnet address to 172.25.0.0 in an existing AMF network, use the following commands:

```
master# atmf working-set group all
test[10]# configure terminal
test(config)[10]# atmf management subnet 172.25.0.0
master(config)# exit
master# atmf working-set group all
test[10]# write
```

To reset the AMF management subnet address to its default of 172.31.0.0 in an existing AMF network, use the following commands:

```
master# atmf working-set group all
test[10]# configure terminal
test(config)[10]# no atmf management subnet
master(config)# exit
master# atmf working-set group all
test[10]# write
```

Related commands

atmf domain vlan

atmf management vlan

atmf management vlan

Overview The AMF management VLAN is created when the AMF network is first initiated and is assigned a default VID of 4092. This command enables you to change the VID from this default value on this device.

The AMF management VLAN is one of AMF's internal VLANs (the domain VLAN is the other internal VLAN). AMF uses these internal VLANs to communicate network status information between nodes. These VLANs must be reserved for AMF and not used for other purposes.

CAUTION: *Every member of your AMF network must have the same domain VLAN, management VLAN, and management subnet.*

CAUTION: *If you change the domain VLAN, management VLAN, or management subnet of a node, that change takes effect immediately and the node will immediately leave the AMF network and try to rejoin it. The AMF network will not be complete until you have given all devices the same setting, so they can all rejoin the AMF network.*

Use the **no** variant of this command to restore the VID to the default of 4092.

Syntax

```
atmf management vlan <2-4090>
no atmf management vlan
```

Parameter	Description
<2-4090>	The VID assigned to the AMF management VLAN.

Default VLAN 4092

Mode Global Configuration

Usage We recommend you only change the management VLAN when first creating the AMF network, and only if VLAN 4092 is already being used in your network.

However, if you do need to change the VLAN on an existing AMF network, use the following steps to ensure you change it on all nodes simultaneously:

1) Create a working set of the whole of your AMF network, using the commands:

```
master# atmf working-set group all
```

You must use **working-set group all** if changing the management VLAN. If you use a different working-set, nodes that are not in that working-set will lose contact with the AMF network.

2) The prompt will display the number of nodes in the AMF network. Record this number. In this example, the network is named "test" and has 10 nodes:

```
test[10]#
```

3) Enter the new VLAN ID, using the commands:

```
test[10]# configure terminal
test(config)[10]# atmf management vlan <2-4090>
```

The nodes will execute the command in parallel, leave the AMF network, and attempt to rejoin through the new VLAN.

4) Create the working set again, using the commands:

```
master(config)# exit
master# atmf working-set group all
```

5) Save the configuration, using the command:

```
test[10]# write
```

6) The prompt will display the number of nodes in the AMF network. Check that this is the same as the number in step 1. If it is not, you will need to change the VLAN on missing devices by logging into their consoles directly.

NOTE: *The management VLAN will automatically be assigned an IP subnet address based on the value configured by the command atmf management subnet.*

The default VLAN ID lies outside the user-configurable range. If you need to reset the VLAN to the default VLAN ID, use the **no** variant of this command to do so.

Examples To change the AMF management VLAN to 4090 in an existing AMF network, use the following commands:

```
master# atmf working-set group all
test[10]# configure terminal
test(config)[10]# atmf management vlan 4090
master(config)# exit
master# atmf working-set group all
test[10]# write
```

To reset the AMF management VLAN to its default of 4092 in an existing AMF network, use the following commands:

```
master# atmf working-set group all
test[10]# configure terminal
test(config)[10]# no atmf management vlan
master(config)# exit
master# atmf working-set group all
test[10]# write
```

Related commands atmf domain vlan

atmf management subnet

atmf master

Overview This command configures the device to be an AMF master node and automatically creates an AMF master group. The master node is considered to be the core of the AMF network, and must be present for the AMF to form. The AMF master has its node depth set to 0. Note that the node depth vertical distance is determined by the number of uplinks/downlinks that exist between the node and its master.

An AMF master node must be present for an AMF network to form. Up to two AMF master nodes may exist in a network, and they **must** be connected by an AMF crosslink.

NOTE: *Master nodes are an essential component of an AMF network. In order to run AMF, an AMF License is required for each master node.*

If the crosslink between two AMF masters fails, then one of the masters will become isolated from the rest of the AMF network.

Use the **no** variant of this command to remove the device as an AMF master node. The node will retain its node depth of 0 until the network is rebooted.

NOTE: *Node depth is the vertical distance (or level) from the master node (whose depth value is 0).*

Syntax

```
atmf master
no atmf master
```

Default The device is not configured to be an AMF master node.

Mode Global Configuration

Example To specify that this node is an AMF master, use the following command:

```
node-1# configure terminal
node-1(config)# atmf master
```

Related Commands show atmf

show atmf group

atmf mtu

Overview This command configures the AMF network Maximum Transmission Unit (MTU). The MTU value will be applied to the AMF Management VLAN, the AMF Domain VLAN and AMF Area links.

Use the **no** variant of this command to restore the default MTU.

Syntax

```
atmf mtu <1300-1442>
no atmf mtu
```

Parameter	Description
<1300-1442>	The value of the maximum transmission unit for the AMF network, which sets the maximum size of all AMF packets generated from the device.

Default 1300

Mode Global Configuration

Usage The default value of 1300 will work for all AMF networks (including those that involve virtual links over IPsec tunnels). If there are virtual links over IPsec tunnels anywhere in the AMF network, we recommend not changing this default. If there are no virtual links over IPsec tunnels, then this AMF MTU value may be increased for network efficiency.

Example To change the ATMF network MTU to 1442, use the command:

```
awplus(config)# atmf mtu 1442
```

Related Commands show atmf detail

atmf network-name

Overview This command applies an AMF network name to a (prospective) AMF node. In order for an AMF network to be valid, its network-name must be configured on at least two nodes, one of which must be configured as a master and have an AMF License applied. These nodes may be connected using either AMF downlinks or crosslinks.

For more information on configuring an AMF master node, see the command atmf master.

Use the **no** variant of this command to remove the AMF network name.

Syntax

```
atmf network-name <name>
no atmf network-name
```

Parameter	Description
<name>	The AMF network name. Up to 15 printable characters can be entered for the network-name.

Mode Global Configuration

Usage This is one of the essential commands when configuring AMF and must be entered on each node that is to be part of the AMF.

A switching node (master or member) may be a member of only one AMF network.

CAUTION: *Ensure that you enter the correct network name. Entering an incorrect name will cause the AMF network to fragment (at the next reboot).*

Example To set the AMF network name to amf_net use the command:

```
Node_1(config)# atmf network-name amf_net
```

atmf provision

Overview This command configures a specified port on an AMF node to accept a provisioned node, via an AMF link, some time in the future.

Use the **no** variant of this command to remove the provisioning on the node.

Syntax

```
atmf provision [<nodename>]
no atmf provision
```

Parameter	Description
<nodename>	The name of the provisioned node that will appear on the AMF network in the future.

Default No AMF provisioning.

Mode Interface Configuration for a switchport, a static aggregator or a dynamic channel group.

Usage The port should be configured as an AMF link or cross link and should be “down” to add or remove a provisioned node.

Example To provision an AMF node named node1 for port1.0.1, use the command:

```
host1(config)# interface port1.0.1
host1(config-if)# atmf provision node1
```

Related Commands

switchport atmf-link

switchport atmf-crosslink

show atmf links

atmf provision node clone

Overview This command sets up a space on the backup media for use with a provisioned node and copies into it almost all files and directories from a chosen backup or provisioned node.

Alternatively, you can set up a new, unique provisioned node by using the command atmf provision node create.

Syntax `atmf provision node <nodename> clone <source-nodename>`

Parameter	Description
<nodename>	The name that will be assigned to the clone when connected.
<source-nodename>	The name of the node whose configuration is to be copied for loading to the clone.

Mode Privileged Exec

Usage This command is only available on master nodes in the AMF network.

You must run either this command or atmf provision node create command, before you can use other **atmf provision node** commands using the specified node name. If a backup or provisioned node already exists for the specified node then you must delete it before using the **atmf provision node clone** command.

When using this command it is important to be aware of the following:

- A copy of <*media*>:atmf/<*atmf_name*>/nodes/<*source_node*>/flash will be made for the provisioned node and stored in the backup media.
- The directory <*node_backup_dir*>/flash/.config/ssh is excluded from the copy.
- All contents of <*root_backup_dir*>/nodes/<*nodename*> will be deleted or overwritten.
- Settings for the expected location of other provisioned nodes are excluded from the copy.

The active and backup configuration files are automatically modified in the following ways:

- The **hostname** command is modified to match the name of the provisioned node.
- The **stack virtual-chassis-id** command is removed, if present.

Example To copy from the backup of device2 to create backup files for the new provisioned node device3 use the following command:

```
device1# atmf provision node device3 clone device2
```

Figure 47-1: Sample output from the **atmf provision node clone** command

```
device1#atmf provision node device3 clone device2
Copying...
Successful operation
```

To confirm that a new provisioned node has been cloned, use the command:

```
device1# show atmf backup
```

The output from this command is shown in the following figure, and shows the details of the new provisioned node device3.

Figure 47-2: Sample output from the **show atmf backup** command

```
device1#show atmf backup

Scheduled Backup ...... Enabled
  Schedule ............ 1 per day starting at 03:00
  Next Backup Time .... 01 Oct 2016 03:00
Backup Bandwidth ...... Unlimited
Backup Media .......... USB (Total 7446.0MB, Free 7297.0MB)
Server Config .........
  Synchronization ..... Unsynchronized
    Last Run .......... -
   1 .................. Unconfigured
   2 .................. Unconfigured
Current Action ........ Idle
  Started ............. -
  Current Node ........ -

-----------------------------------------------------------------
Node Name     Date         Time      In ATMF  On Media  Status
-----------------------------------------------------------------
device3       -            -         No       Yes       Prov
device1       30 Sep 2016  00:05:49  No       Yes       Good
device2       30 Sep 2016  00:05:44  Yes      Yes       Good
```

atmf provision node configure boot config

Overview This command sets the configuration file to use during the next boot cycle. This command can also set a backup configuration file to use if the main configuration file cannot be accessed for an AMF provisioned node. To unset the boot configuration or the backup boot configuration use the **no boot** command.

Use the **no** variant of this command to set back to the default.

Syntax

```
atmf provision node <nodename> configure boot config [backup]
[<file-path|URL>]
```

```
atmf provision node [<nodename>] configure no boot config
[backup]
```

Parameter	Description
<nodename>	The name of the provisioned node.
<file-path|URL>	The path or URL and name of the configuration file.

Default No boot configuration files or backup configuration files are specified for the provisioned node.

Mode Privileged Exec

Usage When using this command to set a backup configuration file, the specified AMF provisioned node must exist. The specified file must exist in the flash directory created for the provisioned node in the AMF remote backup media.

Examples To set the configuration file `branch.cfg` on the AMF provisioned node `node1`, use the command:

```
MasterNodeName# atmf provision node node1 configure boot config
branch.cfg
```

To set the configuration file `backup.cfg` as the backup to the main configuration file on the AMF provisioned node `node1`, use the command:

```
MasterNodeName# atmf provision node node1 configure boot config
backup usb:/atmf/amf_net/nodes/node1/config/backup.cfg
```

To unset the boot configuration, use the command:

```
MasterNodeName# atmf provision node node1 configure no boot
config
```

To unset the backup boot configuration, use the command:

```
MasterNodeName# atmf provision node node1 configure no boot
config backup
```

Related Commands atmf provision node configure boot system

show atmf provision nodes

atmf provision node configure boot system

Overview This command sets the release file that will load onto a specified provisioned node during the next boot cycle. This command can also set the backup release file to be loaded for an AMF provisioned node. To unset the boot system release file or the backup boot release file use the **no boot** command.

Use the **no** variant of this command to return to the default.

This command can only be run on AMF master nodes.

Syntax

```
atmf provision node <nodename> configure boot system [backup]
[<file-path|URL>]
```

```
atmf provision node <nodename> configure no boot system [backup]
```

Parameter	Description
<nodename>	The name of the provisioned node.
<file-path|URL>	The path or URL and name of the release file.

Default No boot release file or backup release files are specified for the provisioned node.

Mode Privileged Exec

Usage When using this command to set a backup release file, the specified AMF provisioned node must exist. The specified file must exist in the flash directory created for the provisioned node in the AMF remote backup media.

Examples To set the release file x930-5.4.7-1.1.rel on the AMF provisioned node “node1”, use the command:

```
MasterNodeName# atmf provision node node1 configure boot system
x930-5.4.7-1.1.rel
```

To set the backup release file x930-5.4.7-0.4.rel as the backup to the main release file on the AMF provisioned node “node1”, use the command:

```
MasterNodeName# atmf provision node node1 configure boot system
backup card:/atmf/amf_net/nodes/node1/flash/x930-5.4.7-0.4.rel
```

To unset the boot release, use the command:

```
MasterNodeName# atmf provision node node1 configure no boot
system
```

To unset the backup boot release, use the command:

```
MasterNodeName# atmf provision node node1 configure no boot
system backup
```

Related Commands atmf provision node configure boot config

show atmf provision nodes

atmf provision node create

Overview This command sets up an empty directory on the backup media for use with a provisioned node. This directory can have configuration and release files copied to it from existing devices. Alternatively, the configuration files can be created by the user.

An alternative way to create a new provisioned node is with the command atmf provision node clone.

This command can only run on AMF master nodes.

Syntax `atmf provision node <nodename> create`

Parameter	Description
<nodename>	The name of the node that is being provisioned.

Mode Privileged Exec

Usage This command is only available on master nodes in the AMF network.

The atmf provision node create command (or atmf provision node clone) must be executed before you can use other **atmf provision node** commands with the specified node name. If a backup or provisioned node already exists for the specified node name then you must delete it before using this command.

A date and time is assigned to the new provisioning directory reflecting when this command was executed. If there is a backup or provisioned node with the same name on another AMF master then the most recent one will be used.

Example To create a new provisioned node named “device2” use the command:

```
device1# atmf provision node device2 create
```

Running this command will create the following directories:

- <*media*>:atmf/<*atmf_name*>/nodes/<*node*>
- <*media*>:atmf/<*atmf_name*>/nodes/<*node*>/flash

To confirm the new node’s settings, use the command:

```
device1# show atmf backup
```

The output for the **show atmf backup** command is shown in the following figure, and shows details for the new provisioned node device2.

Figure 47-3: Sample output from the **show atmf backup** command

```
device1#show atmf backup

Scheduled Backup ...... Enabled
  Schedule ............ 1 per day starting at 03:00
  Next Backup Time .... 01 Oct 2016 03:00
Backup Bandwidth ...... Unlimited
Backup Media .......... USB (Total 7446.0MB, Free 7315.2MB)
Server Config .........
  Synchronization ..... Unsynchronized
    Last Run .......... -
   1 .................. Unconfigured
   2 .................. Unconfigured
Current Action ........ Idle
  Started ............. -
  Current Node ........ -

-----------------------------------------------------------------
Node Name     Date         Time      In ATMF  On Media  Status
-----------------------------------------------------------------
device2       -            -         No       Yes       Prov
device1       30 Sep 2016  00:05:49  No       Yes       Good
```

For instructions on how to configure on a provisioned node, see the AMF Feature Overview and Configuration Guide.

Related commands

atmf provision node clone

atmf provision node delete

Overview This command deletes files that have been created for loading onto a provisioned node. It can only be run on master nodes.

Syntax

```
atmf provision node <nodename> delete
```

Parameter	Description
<nodename>	The name of the provisioned node to be deleted.

Mode Privileged Exec

Usage This command is only available on master nodes in the AMF network. The command will only work if the provisioned node specified in the command has already been set up (although the device itself is still yet to be installed). Otherwise, an error message is shown when the command is run.

You may want to use the **atmf provision node delete** command to delete a provisioned node that was created in error or that is no longer needed.

This command cannot be used to delete backups created by the AMF backup procedure. In this case, use the command atmf backup delete to delete the files.

NOTE: *This command allows provisioned entries to be deleted even if they have been referenced by the atmf provision command, so take care to only delete unwanted entries.*

Example To delete backup files for a provisioned node named device3 use the command:

```
device1# atmf provision node device3 delete
```

To confirm that the backup files for provisioned node device3 have been deleted use the command:

```
device1# show atmf backup
```

The output should show that the provisioned node device3 no longer exists in the backup file, as shown in the figure below:

Figure 47-4: Sample output showing the **show atmf backup** command

```
device1#show atmf backup

Scheduled Backup ...... Enabled
  Schedule ............ 1 per day starting at 03:00
  Next Backup Time .... 01 Oct 2016 03:00
Backup Bandwidth ...... Unlimited
Backup Media .......... USB (Total 7446.0MB, Free 7297.0MB)
Server Config .........
  Synchronization ..... Unsynchronized
    Last Run .......... -
   1 .................. Unconfigured
   2 .................. Unconfigured
Current Action ........ Idle
  Started ............. -
  Current Node ........ -

-----------------------------------------------------------------
Node Name     Date         Time      In ATMF  On Media  Status
-----------------------------------------------------------------
device1       30 Sep 2016  00:05:49  No       Yes       Good
device2       30 Sep 2016  00:05:44  Yes      Yes       Good
```

Related commands atmf provision node create

atmf provision node license-cert

Overview This command is used to set up the license certificate for a provisioned node.

The certificate file usually has all the license details for the network, and can be stored anywhere in the network. This command makes a hidden copy of the certificate file and stores it in the space set up for the provisioned node on AMF backup media.

For node provisioning, the new device has not yet been part of the AMF network, so the user is unlikely to know its product ID or its MAC address. When such a device joins the network, assuming that this command has been applied successfully, the copy of the certificate file will be applied automatically to the provisioned node.

Once the new device has been resurrected on the network and the certificate file has been downloaded to the provisioned node, the hidden copy of the certificate file is deleted from AMF backup media.

Use the **no** variant of this command to set it back to the default.

This command can only be run on AMF master nodes.

Syntax

```
atmf provision node <nodename> license-cert <file-path|URL>
no atmf provision node <nodename> license-cert
```

Parameter	Description
<nodename>	The name of the provisioned node.
<file-path|URL>	The name of the certificate file. This can include the file-path of the file.

Default No license certificate file is specified for the provisioned node.

Mode Privileged Exec

Usage This command is only available on master nodes in the AMF network. It will only operate if the provisioned node specified in the command has already been set up, and if the license certification is present in the backup file. Otherwise, an error message is shown when the command is run.

Example 1 To apply the license certificate “cert1.txt” stored on a TFTP server for AMF provisioned node “device2”, use the command:

```
device1# atmf provision node device2 license-cert
tftp://192.168.1.1/cert1.txt
```

Example 2 To apply the license certificate “cert2.txt” stored in the AMF master's flash directory for AMF provisioned node “host2”, use the command:

```
device1# atmf provision node host2 license-cert /cert2.txt
```

To confirm that the license certificate has been applied to the provisioned node, use the command show atmf provision nodes. The output from this command is shown below, and displays license certification details in the last line.

Figure 47-5: Sample output from the **show atmf provision nodes** command

```
device1#show atmf provision nodes

ATMF Provisioned Node Information:

Backup Media .............: SD (Total 3827.0MB, Free 3481.1MB)

Node Name                 : device2
Date & Time               : 06-Oct-2016 & 23:25:44
Provision Path            : card:/atmf/nodes

Boot configuration :
Current boot image        : x510-5.4.6-1.4.rel (file exists)
Backup  boot image        : x510-5.4.6-1.3.rel (file exists)
Default boot config       : flash:/default.cfg (file exists)
Current boot config       : flash:/abc.cfg (file exists)
Backup  boot config       : flash:/xyz.cfg (file exists)

Software Licenses :
Repository file           : ./.configs/.sw_v2.lic
                          : ./.configs/.swfeature.lic
Certificate file          : card:/atmf/lok/nodes/awplus1/flash/.atmf-lic-cert
```

Related commands show atmf provision nodes

atmf provision node locate

Overview This command changes the present working directory to the directory of a provisioned node. This makes it easier to edit files and create a unique provisioned node in the backup.

This command can only be run on AMF master nodes.

Syntax

```
atmf provision node <nodename> locate
```

Parameter	Description
<nodename>	The name of the provisioned node.

Mode Privileged Exec

Usage This command is only available on master nodes in the AMF network. The command will only work if the provisioned node specified in the command has already been set up. Otherwise, an error message is shown when the command is run.

NOTE: *We advise that after running this command, you return to a known working directory, typically flash.*

Example To change the working directory that happens to be on device1 to the directory of provisioned node device2, use the following command:

```
device1# atmf provision node device2 locate
```

The directory of the node device2 should now be the working directory. You can use the command pwd to check this, as shown in the following figure.

Figure 47-6: Sample output from the **pwd** command

```
device2#pwd
card:/atmf/building_2/nodes/device2/flash
```

The output above shows that the working directory is now the flash of device2.

Related commands

atmf provision node create

atmf provision node clone

pwd

atmf reboot-rolling

Overview This command enables you to reboot the nodes in an AMF working-set, one at a time, as a rolling sequence in order to minimize downtime. Once a rebooted node has finished running its configuration and its ports are up, it re-joins the AMF network and the next node is rebooted.

By adding the *url* parameter, you can also upgrade your devices' software one AMF node at a time.

The **force** parameter forces the rolling reboot to continue even if a previous node does not rejoin the AMF network. Without the **force** parameter, the unsuitable node will time-out and the rolling reboot process will stop. However, with the **force** parameter applied, the process will ignore the timeout and move on to reboot the next node in the sequence.

This command can take a significant amount of time to complete.

Syntax `atmf reboot-rolling [force] [<url>]`

Parameter	Description
`force`	Ignore a failed node and move on to the next node. Where a node fails to reboot a timeout is applied based on the time taken during the last reboot.
`<url>`	The path to the software upgrade file.

Mode Privileged Exec

Usage You can load the software from a variety of locations. The latest compatible release for a node will be selected from your selected location, based on the parameters and URL you have entered.

For example card:/5.4.6/x*-5.4.6-*.rel will select from the folder card:/5.4.6 the latest file that matches the selection x (wildcard) -5.4.6-(wildcard).rel. Because x* is applied, each device type will be detected and its appropriate release file will be installed.

Other allowable entries are:

Entry	Used when loading software
card:*.rel:	from an SD card
tftp:<*ip-address*>:	from a TFTP server
usb:	from a USB flash drive
flash:	from flash memory, e.g. from one x930 switch to another
scp:	using secure copy
http:	from an HTTP file server

Several checks are performed to ensure the upgrade will succeed. These include checking the current node release boots from flash. If there is enough space on flash, the software release is copied to flash to a new location on each node as it is processed. The new release name will be updated using the **boot system**<*release-name*> command, and the old release will become the backup release file.

NOTE: *If you are using TFTP or HTTP, for example, to access a file on a remote device then the URL should specify the exact release filename without using wild card characters.*

On bootup the software release is verified. Should an upgrade fail, the upgrading unit will revert back to its previous software version. At the completion of this command, a report is run showing the release upgrade status of each node.

NOTE: *Take care when removing external media or rebooting your devices. Removing an external media while files are being written entails a significant risk of causing a file corruption.*

Example 1 To reboot all x510 nodes in an AMF network, use the following command:

```
Bld2_Floor_1# atmf working-set group x510
```

This command returns the following type of screen output:

```
====================
node1, node2, node3:
====================

Working set join

AMF_NETWORK[3]#
```

```
ATMF_NETWORK[3]# atmf reboot-rolling
```

When the reboot has completed, a number of status screens appear. The selection of these screens will depend on the parameters set.

```
Bld2_Floor_1#atmf working-set group x510

============================
SW_Team1, SW_Team2, SW_Team3:
============================

Working set join

ATMF_NETWORK[3]#atmf reboot-rolling
ATMF Rolling Reboot Nodes:

                    Timeout
Node Name           (Minutes)
--------------------------
SW_Team1               14
SW_Team2                8
SW_Team3                8
Continue the rolling reboot ? (y/n):y
================================================
ATMF Rolling Reboot: Rebooting SW_Team1
================================================

% SW_Team1 has left the working-set
Reboot of SW_Team1 has completed
================================================
ATMF Rolling Reboot: Rebooting SW_Team2
================================================

% SW_Team2 has left the working-set
Reboot of SW_Team2 has completed
================================================
ATMF Rolling Reboot: Rebooting SW_Team3
================================================

% SW_Team3 has left the working-set
Reboot of SW_Team3 has completed

================================================
ATMF Rolling Reboot Complete
Node Name           Reboot Status
---------------------------------
SW_Team1               Rebooted
SW_Team2               Rebooted
SW_Team3               Rebooted
================================================
```

Example 2 To update firmware releases, use the following command:

```
Node_1# atmf working-set group all

ATMF_NETWORK[9]# atmf reboot-rolling
card:/5.4.6/x*-5.4.6-*.rel
```

```
ATMF Rolling Reboot Nodes:

                    Timeout
Node Name           (Minutes)    New Release File             Status
-------------------------------------------------------------------------
SW_Team1               8         x510-5.4.6-0.1.rel           Release Ready
SW_Team2              10         x510-5.4.6-0.1.rel           Release Ready
SW_Team3               8         ---                          Not Supported
HW_Team1               6         ---                          Incompatible
Bld1_Floor_2           2         x930-5.4.6-0.1.rel           Release Ready
Bld1_Floor_1           4         ---                          Incompatible
Building_1             2         ---                          Incompatible
Building_2             2         x908-5.4.6-0.1.rel           Release Ready
Continue upgrading releases ? (y/n):
```

atmf recover

Overview This command is used to manually initiate the recovery (or replication) of an AMF node, usually when a node is being replaced.

Syntax

```
atmf recover [<node-name> master <node-name>]
atmf recover [<node-name> controller <node-name>]
```

Parameter	Description
<node-name>	The name of the device whose configuration is to be recovered or replicated.
`master` *<node-name>*	The name of the master device that holds the required configuration information. Note that although you can omit both the node name and the master name; you cannot specify a master name unless you also specify the node name.
`controller` *<node-name>*	The name of the controller that holds the required configuration information. Note that although you can omit both the node name and the controller name; you cannot specify a controller name unless you also specify the node name.

Mode Privileged Exec

Usage The recovery/replication process involves loading the configuration file for a node that is either about to be replaced or has experienced some problem. You can specify the configuration file of the device being replaced by using the *<node-name>* parameter, and you can specify the name of the master node or controller holding the configuration file.

If the *<node-name>* parameter is not entered then the node will attempt to use one that has been previously configured. If the replacement node has no previous configuration (and has no previously used node-name), then the recovery will fail.

If the master or controller name is not specified then the device will poll all known AMF masters and controllers and execute an election process (based on the last successful backup and its timestamp) to determine which to use. If no valid backup master or controller is found, then this command will fail.

No error checking occurs when this command is run. Regardless of the last backup status, the recovering node will attempt to load its configuration from the specified master node or controller.

If the node has previously been configured, we recommend that you suspend any AMF backup before running this command. This is to prevent corruption of the backup files on the AMF master as it attempts to both backup and recover the node at the same time.

Example To recover the AMF node named Node_10 from the AMF master node named Master_2, use the following command:

```
Master_2# atmf recover Node_10 master Master_2
```

Related Commands

atmf backup stop

show atmf backup

show atmf

atmf recover guest

Overview Use this command to initiate a guest node recovery or replacement by reloading its backup file-set that is located within the AMF backup system. Note that this command must be run on the edge node device that connects to the guest node.

Syntax

```
atmf recover guest [<guest-port>]
```

Parameter	Description
<guest-port>	The port number that connects to the guest node.

Mode User Exec/Privileged Exec

Example To recover a guest on node1 port1.0.1, use the following command

```
node1# atmf recover guest port1.0.1
```

Related Commands show atmf backup guest

atmf recover led-off

Overview This command turns off the recovery failure flashing port LEDs. It reverts the LED's function to their normal operational mode, and in doing so assists with resolving the recovery problem. You can repeat this process until the recovery failure has been resolved. For more information, see the AMF Feature Overview and Configuration Guide.

Syntax
```
atmf recover led-off
```

Default Normal operational mode

Mode Privileged Exec

Example To revert the LEDs on Node1 from recovery mode display to their normal operational mode, use the command:

```
Node1# atmf recover led-off
```

Related Commands atmf recover

atmf remote-login

Overview Use this command to remotely login to other AMF nodes in order to run commands as if you were a local user of that node.

Syntax

```
atmf remote-login [user <name>] <nodename>
```

Parameter	Description
<name>	The name of a user on the remote node.
<nodename>	The name of the remote AMF node you are connecting to.

Mode Privileged Exec (This command will only run at privilege level 15)

Usage You do not need a valid login on the local device in order to run this command. The session will take you to the enable prompt on the new device. If the remote login session exits for any reason (e.g. device reboot) you will be returned to the originating node.

You can create additional user accounts on nodes. AMF's goal is to provide a uniform management plane across the whole network, so we recommend you use the same user accounts on all the nodes in the network.

In reality, though, it is not essential to have the same accounts on all the nodes. Users can remote login from one node to a second node even if they are logged into the first node with a user account that does not exist on the second node (provided that atmf restricted-login is disabled and the user account on the first node has privilege level 15).

Moreover, it is possible to use a RADIUS or TACACS+ server to manage user authentication, so users can log into AMF nodes using user accounts that are present on the RADIUS or TACACS+ server, and not present in the local user databases of the AMF nodes.

The software will not allow you to run multiple remote login sessions. You must exit an existing session before starting a new one.

If you disconnect from the VTY session without first exiting from the AMF remote session, the device will keep the AMF remote session open until the exec-timeout time expires (10 minutes by default). If the exec-timeout time is set to infinity (**exec-timeout 0 0**), then the device is unable to ever close the remote session. To avoid this, we recommend you use the **exit** command to close AMF remote sessions, instead of closing the associated VTY sessions. We also recommend you avoid setting the exec-timeout to infinity.

Example To remotely login from node Node10 to Node20, use the following command:

```
Node10# atmf remote-login node20
Node20>
```

To close the session on Node20 and return to Node10's command line, use the following command:

```
Node20# exit
Node10#
```

In this example, user User1 is a valid user of node5. They can remotely login from node5 to node3 by using the following commands:

```
node5# atmf remote-login user User1 node3
node3> enable
```

Related Commands atmf restricted-login

Command changes Version 5.4.6-2.1: changes to AMF user account requirements

atmf restricted-login

Overview By default, users who are logged into any node on an AMF network are able to manage any other node by using either working-sets or an AMF remote login. If the access provided by this feature is too wide, or contravenes network security restrictions, it can be limited by running this command, which changes the access so that:

- users who are logged into non-master nodes cannot execute any commands that involve working-sets, and
- from non-master nodes, users can use remote-login, but only to login to a user account that is valid on the remote device (via a statically configured account or RADIUS/TACACS+). Users are also required to enter the password for that user account.

Once entered on any AMF master node, this command will propagate across the network.

Use the **no** variant of this command to disable restricted login on the AMF network. This allows access to the **atmf working-set** command from any node in the AMF network.

Syntax

```
atmf restricted-login
no atmf restricted-login
```

Mode Privileged Exec

Default Master nodes operate with **atmf restricted-login** disabled.

Member nodes operate with **atmf restricted-login** enabled.

NOTE: *The default conditions of this command vary from those applied by its "no" variant. This is because the restricted-login action is only applied by **master** nodes, and in the absence of a master node, the default is to apply the restricted action to all **member** nodes with AMF configured.*

Usage In the presence of a **master** node, its default of **atmf restricted-login disabled** will propagate to all its member nodes. Similarly, any change in this command's status that is made on a master node, will also propagate to all its member nodes

Note that once you have run this command, certain other commands that utilize the AMF working-set command, such as the **include**, **atmf reboot-rolling** and **show atmf group members** commands, will operate only on master nodes.

Restricted-login must be enabled on AMF areas with more than 120 nodes.

Example To enable restricted login, use the command

```
Node_20(config)# atmf restricted-login node20
```

Related Commands atmf remote-login

show atmf

Command changes Version 5.4.6-2.1: changes to AMF user account requirements

atmf secure-mode

Overview Use this command to enable AMF secure mode on an AMF node. AMF secure mode makes an AMF network more secure by:

- Adding an authorization mechanism before and AMF member is allowed to join an AMF network.
- The encryption of all AMF packets sent between AMF nodes.
- Adding support for user login authentication by RADIUS or TACACS+, and removing the requirement to have the same privileged user account in the local user database on all devices in the AMF network.
- Adding additional logging which enables network administrators to monitor attempts to gain unauthorized access to the AMF network.

Once the secure mode command is run on all nodes on an AMF network, the AMF masters and AMF controllers manage the addition of AMF nodes and AMF areas to the AMF network.

Use the **no** variant of this command to disable AMF secure mode on an AMF node.

Syntax

```
atmf secure-mode
no atmf secure-mode
```

Default Secure mode is disabled by default.

Mode Global Configuration

Usage When an AMF network is running in AMF secure mode the atmf restricted-login feature is automatically enabled. This restricts the atmf working-set command to users that are logged on to an AMF master. This feature cannot be disabled independently of secure mode.

When AMF secure mode is enabled the AMF controllers and masters in the AMF network form a group of certificate authorities. A node may only join a secure AMF network once it has been authorized by a master or controller. When enabled, all devices in the AMF network must be running in secure mode. Unsecured devices will not be able to join a secure AMF network.

Example To enable AMF secure mode on an AMF node, use the commands:

```
awplus# configure terminal
awplus(config)# atmf secure-mode
```

To disable AMF secure mode on an AMF node, use the commands:

```
awplus# configure terminal
awplus(config)# no atmf secure-mode
```

Related Commands atmf authorize

atmf secure-mode certificate expiry

clear atmf secure-mode certificates

clear atmf secure-mode statistics

show atmf

show atmf authorization

show atmf secure-mode

show atmf secure-mode certificates

show atmf secure-mode sa

show atmf secure-mode statistics

Command changes Version 5.4.7-0.3: command added

atmf secure-mode certificate expire

Overview Use this command on an AMF master to expire a secure mode certificate. Running this command will force the removal of the AMF node from the network.

Syntax
```
atmf secure-mode certificate expire <node-name> [area
<area-name>]
```

Parameter	Description
<node-name>	Name of the AMF node you want to expire the certificate for.
area	Specify an AMF area.
<area-name>	Name of the AMF area you want to expire the AMF nodes certificate for.

Mode Privileged Exec

Example To remove an AMF node named “node3” from an AMF network, use the following command on the AMF master:

```
awplus# atmf secure-mode certificate expire node3
```

To remove an AMF node named “node2” in an area named “area2”, use the following command on the AMF master:

```
awplus# atmf secure-mode certificate expire node2 area area2
```

Related Commands
atmf secure-mode

show atmf secure-mode

show atmf secure-mode certificates

Command changes Version 5.4.7-0.3: command added

atmf secure-mode certificate expiry

Overview Use this command to set the expiry time of AMF secure mode certificates. Once an AMF node's certificate expires it must re-authorize and obtain a new certificate from the AMF master.

Use the **no** variant of this command to reset the expiry time to 180 days.

Syntax

```
atmf secure-mode certificate expiry {<days>|infinite}
no atmf secure-mode certificate expiry
```

Parameter	Description
<days>	Length of time, in days, that an AMF secure mode certificate remains valid. A value between 1 and 365.
`infinite`	The authorization certificate does not expire, in other words AMF nodes stay authorized indefinitely.

Default The default expiry time is 180 days.

Mode Global Configuration

Example To set AMF secure mode certificate expiry to 7 days, use the commands:

```
awplus# configure terminal
awplus(config)# atmf secure-mode certificate expiry 7
```

To set AMF secure mode certificates to never expire, use the commands:

```
awplus# configure terminal
awplus(config)# atmf secure-mode certificate expiry infinite
```

To reset the certificate expiry to 180 days, use the commands:

```
awplus# configure terminal
awplus(config)# no atmf secure-mode certificate expiry
```

Related Commands

atmf secure-mode

show atmf secure-mode

show atmf secure-mode certificates

Command changes Version 5.4.7-0.3: command added

atmf secure-mode certificate renew

Overview Use this command to force all local certificates to expire and be renewed on an AMF secure mode network.

Secure mode certificates renew automatically but this command could be used to renew a certificate in a situation where the automatic renewal may happen while the device is not attached to the AMF network.

Syntax
```
atmf secure-mode certificate renew
```

Mode Privileged Exec

Example To renew a local certificate on a AMF member or AMF master, use the command:

```
awplus# atmf secure-mode certificate renew
```

Related Commands show atmf secure-mode certificates

show atmf secure-mode statistics

Command changes Version 5.4.7-0.3: command added

atmf secure-mode enable-all

Overview Use this command to enable AMF secure mode on an entire network. AMF secure mode makes an AMF network more secure by:

- Adding an authorization mechanism before an AMF member is allowed to join an AMF network.
- The encryption of all AMF packets sent between AMF nodes.
- Adding support for user login authentication by RADIUS or TACACS+, and removing the requirement to have the same privileged user account in the local user database on all devices in the AMF network.
- Adding additional logging which enables network administrators to monitor attempts to gain unauthorized access to the AMF network.

Once this command is run on an AMF network, the AMF masters and AMF controllers manage the addition of AMF nodes and AMF areas to the AMF network.

This command can only be run on an AMF master.

Use the **no** variant of this command to disable AMF secure mode on an entire network.

Syntax

```
atmf secure-mode enable-all
no atmf secure-mode enable-all
```

Default Secure mode is disabled by default.

Mode Privileged Exec

Usage When an AMF network is running in AMF secure mode the atmf restricted-login feature is automatically enabled. This restricts the atmf working-set command to users that are logged on to an AMF master. This feature cannot be disabled independently of secure mode.

When AMF secure mode is enabled the AMF controllers and masters in the AMF network form a group of certificate authorities. A node may only join a secure AMF network once it has been authorized by a master or controller. When enabled, all devices in the AMF network must be running in secure mode. Unsecured devices will not be able to join a secure AMF network.

Running **atmf secure-mode enable-all**:

- Groups all AMF members in a working set.
- Executes clear atmf secure-mode certificates on the working set of members, which removes existing secure mode certificates from all the nodes.
- Groups all the AMF masters in a working set.
- Executes atmf authorize provision **all** on the working set of masters, so all masters provision all nodes.
- Groups all AMF nodes in a working set.

- Runs a script which executes atmf secure-mode and then writes the configuration file on each node.
- Starts a timer that ticks every 10 seconds, for a maximum of 10 times, and checks if all the secure mode capable nodes rejoin the AMF network.

Running **no atmf secure-mode enable-all**:

- Groups all AMF nodes in a working set.
- Runs a script which executes **no** atmf secure-mode and then writes the configuration file on each node.
- Starts a timer that ticks every 10 seconds, for a maximum of 10 times, and checks if all the secure mode capable nodes rejoin the AMF network.

NOTE: *Enabling or disabling secure mode on the network saves the running-config on every device.*

Example To enable AMF secure mode on the entire network, use the command:

```
awplus# atmf secure-mode enable-all
```

You will be prompted to confirm the action:

```
Total number of nodes 21
21 nodes support secure-mode

Enable secure-mode across the AMF network ? (y/n): y
```

To disable AMF secure mode on the entire network, use the command:

```
awplus# no atmf secure-mode enable-all
```

You will be prompted to confirm the action:

```
% Warning: All security certificates will be deleted.
Disable secure-mode across the AMF network ? (y/n): y
```

Related Commands aaa authentication auth-web

show atmf

Command changes Version 5.4.7-0.3: command added

atmf select-area

Overview Use this command to access devices in an area outside the core area on the controller network. This command will connect you to the remote area-master of the specified area.

This command is only valid on AMF controllers.

The **no** variant of this command disconnects you from the remote area-master.

Syntax

```
atmf select-area {<area-name>|local}
no atmf select-area
```

Parameter	Description
<area-name>	Connect to the remote area-master of the area with this name.
`local`	Return to managing the local controller area.

Mode Privileged Exec

Usage After running this command, use the atmf working-set command to select the set of nodes you want to access in the remote area.

Example To access nodes in the area Canterbury, use the command

```
controller-1# atmf select-area Canterbury
```

This displays the following output:

```
Test_network[3]#atmf select-area Canterbury
=============================================
Connected to area Canterbury via host Avensis:
=============================================
```

To return to the local area for controller-1, use the command

```
controller-1# atmf select-area local
```

Alternatively, to return to the local area for controller-1, use the command

```
controller-1# no atmf select-area
```

Related Commands atmf working-set

atmf topology-gui enable

Overview Use this command to enable the operation of Vista Manager EX on the Master device.

Vista Manager EX delivers state-of-the-art monitoring and management for your Autonomous Management Framework™ (AMF) network, by automatically creating a complete topology map of switches, firewalls and wireless access points (APs). An expanded view includes third-party devices such as security cameras.

Use the **no** variant of this command to disable operation of Vista Manager EX.

Syntax

```
atmf topology-gui enable
no atmf topology-gui enable
```

Default Disabled by default on AMF Master and member nodes. Enabled by default on Controllers.

Mode Global Configuration mode

Usage To use Vista Manager EX, you must also enable the HTTP service on all AMF nodes, including all AMF masters and controllers. The HTTP service is enabled by default on AlliedWare Plus switches and disabled by default on AR-Series firewalls. To enable it, use the commands:

```
Node1# configure terminal
Node1(config)# service http
```

On one master in each AMF area in your network, you also need to configure the master to send event notifications to Vista Manager EX. To do this, use the commands:

```
Node1# configure terminal
Node1(config)# log event-host <ip-address> atmf-topology-event
```

Example To enable Vista Manager EX on Node1, use the following commands:

```
Node1# configure terminal
Node1(config)# atmf topology-gui enable
```

To disable Vista Manager EX on Node1, use the following commands:

```
Node1# configure terminal
Node1(config)# no atmf topology-gui enable
```

Related Commands

atmf enable

log event-host

service http

atmf virtual-crosslink

Overview Use this command to create a virtual crosslink. A virtual crosslink connects an AMF master or controller on a physical device to a Virtual AMF Appliance (VAA) master or controller.

All AMF master nodes must reside in the same AMF domain and are required to be directly connected using AMF crosslinks. In order to be able to meet this requirement for AMF masters running on VAAs, a virtual crosslink connects the AMF master or controller on the physical device to the master or controller on the VAA.

Use the **no** variant of this command to remove a virtual crosslink.

Syntax

```
atmf virtual-crosslink id <local-id> ip <local-ip> remote-id
<remote-id> remote-ip <remote-ip>
```

```
no atmf virtual-crosslink id <local-id>
```

Parameter	Description
<local-id>	ID of the local tunnel port, a value between 1 and 4094.
<local-ip>	IPv4 address of the local tunnel port in a.b.c.d format.
<remote-id>	ID of the remote tunnel port, a value between 1 and 4094.
<remote-ip>	IPv4 address of the remote tunnel port in a.b.c.d format.

Default No AMF virtual crosslinks are created by default.

Mode Global Configuration

Usage This command allows a virtual tunnel to be created between two remote sites over a layer 3 link. The tunnel encapsulates AMF packets and allows them to be sent transparently across a Wide Area Network (WAN) such as the Internet.

Configuration involves creating a local tunnel ID, a local IP address, a remote tunnel ID and a remote IP address. Each side of the tunnel must be configured with the same, but mirrored parameters.

NOTE: *Virtual crosslinks are not supported on AMF container masters, therefore if multiple tenants on a single VAA host are configured for secure mode, only a single AMF master is supported per area.*

Example To setup a virtual link from a local site, “siteA”, to a remote site, “siteB”, (assuming there is already IP connectivity between the sites), run the following commands at the local site:

```
siteA# configure terminal
```

```
siteA(config)# atmf virtual-crosslink id 5 ip 192.168.100.1
remote-id 10 remote-ip 192.168.200.1
```

At the remote site, run the commands:

```
siteB# configure terminal
siteB(config)# atmf virtual-crosslink id 10 ip 192.168.200.1
remote-id 5 remote-ip 192.168.100.1
```

To remove this virtual crosslink, run the following commands on the local site:

```
siteA# configure terminal
siteA(config)# no atmf virtual-crosslink id 5
```

On the remote site, run the commands:

```
siteB# configure terminal
siteB(config)# no atmf virtual-crosslink id 10
```

Related Commands

atmf virtual-crosslink

show atmf links

switchport atmf-crosslink

Command changes

Version 5.4.7-0.3: command added

atmf virtual-link

Overview This command creates one or more Layer 2 tunnels that enable AMF nodes to transparently communicate across a wide area network using Layer 2 connectivity protocols.

Once connected through the tunnel, the remote member will have the same AMF capabilities as a directly connected AMF member.

Use the **no** variant of this command to remove the specified virtual link.

Syntax

```
atmf virtual-link id <1-4094> ip <a.b.c.d> remote-id <1-4094>
remote-ip <a.b.c.d> [remote-area <area-name>]

no atmf virtual-link id <1-4094>
```

Parameter	Description
ip	The Internet Protocol (IP).
<a.b.c.d>	The IP address, of the local amf node (at its interface to the tunnel) entered in a.b.c.d format.
remote-id	The ID of the (same) tunnel that will be applied by the remote node. Note that this must match the local-id that is defined on the remote node. This means that (for the same tunnel) the local and remote tunnel IDs are reversed on the local and remote nodes.
<1-4094>	The ID range 1-4094.
remote-ip	The IP address of the remote node
<a.b.c.d>	The IP address, of the remote node (at its interface to the tunnel) entered in a.b.c.d format.
remote-area	The remote area connected to this area virtual link
<area-name>	The name of the remote area connected to this virtual link.

Mode Global Configuration

Usage The Layer 2 tunnel that this command creates enables a local AMF session to appear to pass transparently across a Wide Area Network (WAN) such as the Internet. The addresses configured as the local and remote tunnel IP addresses must have IP connectivity to each other. If the tunnel is configured to connect a head office and branch office over the Internet, typically this would involve using some type of managed WAN service such as a site-to-site VPN. Tunnels are only supported using IPv4.

Configuration involves creating a local tunnel ID, a local IP address, a remote tunnel ID and a remote IP address. A reciprocal configuration is also required on the corresponding remote device. The local tunnel ID must be unique to the device on which it is configured.

The tunneled link may operate via external (non AlliedWare Plus) routers in order to provide wide area network connectivity. However in this configuration, the routers perform a conventional router to router connection. The protocol tunneling function is accomplished by the AMF nodes.

NOTE: *AMF cannot achieve zero touch replacement of the remote device that terminates the tunnel connection, because you must pre-configure the local IP address and tunnel ID on that remote device.*

Example 1 Use the following commands to create the tunnel shown in the figure below.

Figure 47-7: AMF virtual link example

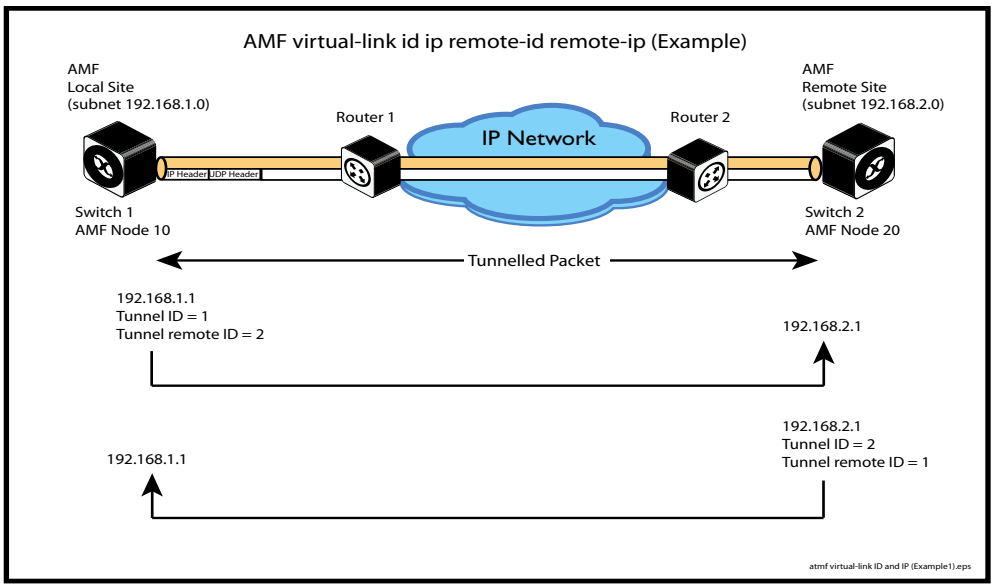


```
Node_10(config)# atmf virtual-link id 1 ip 192.168.1.1
remote-id 2 remote-ip 192.168.2.1
```

```
Node_20(config)# atmf virtual-link id 2 ip 192.168.2.1
remote-id 1 remote-ip 192.168.1.1
```

Example 2 To set up an area virtual link to a remote site (assuming IP connectivity between the sites already), one site must run the following commands:

```
SiteA# configure terminal
```

```
SiteA(config)# atmf virtual-link id 5 ip 192.168.100.1
remote-id 10 remote-ip 192.168.200.1 remote-area SiteB-AREA
```

The second site must run the following commands:

```
SiteB# configure terminal
```

```
SiteB(config)# atmf virtual-link id 10 ip 192.168.200.1
remote-id 5 remote-ip 192.168.100.1 remote-area SiteA-AREA
```

Before you can apply the above **atmf virtual-link** command, you must configure the area names *SiteB-AREA* and *SiteA-AREA*.

Validation Command show atmf

show atmf links

atmf working-set

Overview Use this command to execute commands across an individually listed set of AMF nodes or across a named group of nodes.

Note that this command can only be run on a master node.

Use the **no** variant of this command to remove members or groups from the current working-set.

Syntax

```
atmf working-set {[<node-list>]|[group
{<group-list>|all|local|current}]}
```

```
no atmf working-set {[<node-list>]|[group <group-list>]}
```

Parameter	Description
<node-list>	A comma delimited list (without spaces) of nodes to be included in the working-set.
`group`	The AMF group.
<group-list>	A comma delimited list (without spaces) of groups to be included in the working-set. Note that this can include either defined groups, or any of the Automatic, or Implicit Groups shown earlier in the bulleted list of groups.
`all`	All nodes in the AMF.
`local`	Local node Running this command with the parameters **group local** will return you to the local prompt and local node connectivity.
`current`	Nodes in current list.

Mode Privileged Exec

Usage You can put AMF nodes into groups by using the atmf group (membership) command.

This command opens a session on multiple network devices. When you change the working set to anything other than the local device, the prompt will change to the AMF network name, followed by the size of the working set, shown in square brackets. This command has to be run at privilege level 15.

In addition to the user defined groups, the following system assigned groups are automatically created:

- Implicit Groups
  - local: The originating node.
  - current: All nodes that comprise the current working-set.
  - all: All nodes in the AMF.

- Automatic Groups - These can be defined by hardware architecture, e.g. x510, x610, x8100, AR3050S or AR4050S, or by certain AMF nodal designations such as master.

Note that the Implicit Groups do not appear in show atmf group command output.

If a node is an AMF master it will be automatically added to the master group.

Example 1 To add all nodes in the AMF to the working-set, use the command:

```
node1# atmf working-set group all
```

NOTE: *This command adds the implicit group "all" to the working set, where "all" comprises all nodes in the AMF.*

This command displays an output screen similar to the one shown below:

```
=========================================
node1, node2, node3, node4, node5, node6:
=========================================

Working set join

ATMF_NETWORK_Name[6]#
```

Example 2 To return to the local prompt, and connect to only the local node, use the command:

```
ATMF_Network_Name[6]# atmf working-set group local
node1#
```

The following table describes the meaning of the prompts in this example.

Parameter	Description
ATMF_Network_Name	The name of the AMF network, as set by the atmf network-name command.
[6]	The number of nodes in the working-set.
node1	The name of the local node, as set by the hostname command.

bridge-group

Overview Use this command to connect an AMF container to a bridge created on a Virtual AMF Appliance (VAA) virtual machine. This allows the AMF container to connect to a physical network.

An AMF container is an isolated instance of AlliedWare Plus with its own network interfaces, configuration, and file system. The features available inside an AMF container are a sub-set of the features available on the host VAA. These features enable the AMF container to function as a uniquely identifiable AMF master and allows for multiple tenants (up to 60) to run on a single VAA host. See the AMF Feature Overview and Configuration Guide for more information on running multiple tenants on a single VAA host.

Use the **no** variant of this command to remove a bridge-group from an AMF container.

Syntax

```
bridge-group <bridge-id>
no bridge-group
```

Parameter	Description
<bridge-id>	The ID of the bridge group to join, a number between 1 and 64.

Mode AMF Container Configuration

Usage Each container has two virtual interfaces:

1) Interface eth0, used to connect to the AMF controller on the VAA host via an AMF area-link, and configured using this area-link command.

2) Interface eth1, used to connect to the outside world using a bridged L2 network link, and configured using the **bridge-group** command.

Before using this command, a bridge must be created with the same bridge-id on the VAA host using the **bridge <bridge-id>** command.

See the AMF Feature Overview and Configuration Guide for more information on configuring the bridge.

Example To create a bridge group for AMF container “vac-wlg-1” and , use the commands:

```
awplus# configure terminal
awplus(config)# atmf container vac-wlg-1
awplus(config-atmf-container)# bridge-group 1
```

Related Commands

atmf container

show atmf container

Command changes Version 5.4.7-0.1: command added

clear atmf links statistics

Overview This command resets the values of all AMF link, port, and global statistics to zero.

Syntax
```
clear atmf links statistics
```

Mode Privilege Exec

Example To reset the AMF link statistics values, use the command:
```
node_1# clear atmf links statistics
```

Related Commands show atmf links statistics

clear atmf secure-mode certificates

Overview Use this command to remove all certificates from an AMF member or master. AMF nodes will need to be re-authorized once this command has been run.

Syntax

```
clear atmf secure-mode certificates
```

Mode Privileged Exec

Example To clear all certificates from an AMF node, use the command:

```
awplus# clear atmf secure-mode certificates
```

If this is the only master on the network you will see the following warning:

```
% Warning: This node is the only master in the network!
All the nodes will become isolated and refuse to join any ATMF
network. The certificates on all the isolated nodes must be
cleared before rejoining an ATMF network will be possible.

To clear certificates a reboot of the device is required.
Clear certificates and Reboot ? (y/n):
```

On an AMF member you will see the following message:

```
To clear certificates a reboot of the device is required.
Clear certificates and Reboot ? (y/n):
```

Related Commands

atmf authorize

atmf secure-mode

show atmf authorization

show atmf secure-mode certificates

Command changes Version 5.4.7-0.3: command added

clear atmf secure-mode statistics

Overview Use this command to reset all secure mode statistics to 0.

Syntax
```
clear atmf secure-mode statistics
```

Mode Privileged Exec

Example To reset the AMF secure mode statistics information, use the command:
```
awplus# clear atmf secure-mode statistic
```

Related Commands show atmf secure-mode

show atmf secure-mode statistics

Command changes Version 5.4.7-0.3: command added

debug atmf

Overview This command enables the AMF debugging facilities, and displays information that is relevant (only) to the current node. The detail of the debugging displayed depends on the parameters specified.

If no additional parameters are specified, then the command output will display all AMF debugging information, including link events, topology discovery messages and all notable AMF events.

The **no** variant of this command disables either all AMF debugging information, or only the particular information as selected by the command's parameters.

Syntax

```
debug atmf
[link|crosslink|arealink|database|neighbor|error|all]
```

```
no debug atmf
[link|crosslink|arealink|database|neighbor|error|all]
```

Parameter	Description
`link`	Output displays debugging information relating to uplink or downlink information.
`crosslink`	Output displays all crosslink events.
`arealink`	Output displays all arealink events.
`database`	Output displays only notable database events.
`neighbor`	Output displays only notable AMF neighbor events.
`error`	Output displays AMF error events.
`all`	Output displays all AMF events.

Default All debugging facilities are disabled.

Mode User Exec and Global Configuration

Usage If no additional parameters are specified, then the command output will display all AMF debugging information, including link events, topology discovery messages and all notable AMF events.

NOTE: *An alias to the **no** variant of this command is undebug atmf on page 2295.*

Examples To enable all AMF debugging, use the command:

```
node_1# debug atmf
```

To enable AMF uplink and downlink debugging, use the command:

```
node_1# debug atmf link
```

To enable AMF error debugging, use the command:

```
node_1# debug atmf error
```

Related Commands no debug all

debug atmf packet

Overview This command configures AMF Packet debugging parameters. The debug only displays information relevant to the current node. The command has following parameters:

Syntax
```
debug atmf packet [direction {rx|tx|both}] [level {1|2|3}]
[timeout <seconds>] [num-pkts <quantity>]
[filter {node <name>|interface <ifname>}
[pkt-type [1][2][3][4][5][6][7][8][9][10][11][12][13]]]
```

Simplified Syntax

`debug atmf packet`	`[direction {rx|tx|both}]`
	`[level {[1][2|3}]`
	`[timeout <seconds>]`
	`[num-pkts <quantity>]`
`debug atmf packet filter`	`[node <name>]`
	`[interface <ifname>]`
	`[pkt-type [1][2][3][4][5][6][7][8][9][10][11][12][13]]`

NOTE: *You can combine the syntax components shown, but when doing so, you must retain their original order.*

Default Level 1, both Tx and Rx, a timeout of 60 seconds with no filters applied.

NOTE: *An alias to the **no** variant of this command - undebug atmf - can be found elsewhere in this chapter.*

Mode User Exec and Global Configuration

Usage If no additional parameters are specified, then the command output will apply a default selection of parameters shown below:

Parameter	Description
`direction`	Sets debug to packet received, transmitted, or both
`rx`	packets received by this node
`tx`	Packets sent from this node
`1`	AMF Packet Control header Information, Packet Sequence Number. Enter 1 to select this level.
`2`	AMF Detailed Packet Information. Enter 2 to select this level.
`3`	AMF Packet HEX dump. Enter 3 to select this level.
`timeout`	Sets the execution timeout for packet logging

Parameter	Description
<seconds>	Seconds
num-pkts	Sets the number of packets to be dumped
<quantity>	The actual number of packets
filter	Sets debug to filter packets
node	Sets the filter on packets for a particular Node
<name>	The name of the remote node
interface	Sets the filter to dump packets from an interface (portx.x.x) on the local node
<ifname>	Interface port or virtual-link
pkt-type	Sets the filter on packets with a particular AMF packet type
1	Crosslink Hello BPDU packet with crosslink links information. Enter 1 to select this packet type.
2	Crosslink Hello BPDU packet with downlink domain information. Enter 2 to select this packet type.
3	Crosslink Hello BPDU packet with uplink information. Enter 3 to select this packet type.
4	Downlink and uplink hello BPDU packets. Enter 4 to select this packet type.
5	Non broadcast hello unicast packets. Enter 5 to select this packet type.
6	Stack hello unicast packets. Enter 6 to select this packet type.
7	Database description. Enter 7 to select this packet type.
8	DBE request. Enter 8 to select this packet type.
9	DBE update. Enter 9 to select this packet type.
10	DBE bitmap update. Enter 10 to select this packet type.
11	DBE acknowledgment. Enter 11 to select this packet type.
12	Area Hello Packets. Enter 12 to select this packet type.
13	Gateway Hello Packets. Enter 13 to select this packet type.

Examples To set a packet debug on node 1 with level 1 and no timeout, use the command:

```
node_1# debug atmf packet direction tx timeout 0
```

To set a packet debug with level 3 and filter packets received from AMF node 1:

```
node_1# debug atmf packet direction tx level 3 filter node_1
```

To enable send and receive 500 packets only on vlink1 for packet types 1, 7, and 11, use the command:

```
node_1# debug atmf packet num-pkts 500 filter interface vlink1
pkt-type 1 7 11
```

This example applies the **debug atmf packet** command and combines many of its options:

```
node_1# debug atmf packet direction rx level 1 num-pkts 60
filter node x930 interface port1.0.1 pkt-type 4 7 10
```

discovery

Overview AMF nodes gather information about guest nodes by using one of two internally defined discovery methods: static or dynamic. This is one of several modal commands that are configured from within its specific guest-class (mode).

Dynamic discovery (the default method) involves learning IP address and MAC addresses of guest nodes from protocols outside of AMF such as LLDP or DHCP snooping. Dynamic learning is only supported when using IPv4. For IPv6 the static discovery method must be used.

The static method involves entering the guest class name and IP address using the switchport atmf-guestlink command to separately assign an individual switch port to each of the guest nodes. The MAC addresses of each of the guests of that class can then be learned from ARP or Neighbor discovery tables. If you are using the static discovery method, you must ensure that you have configured the appropriate class type for each of your statically discovered guest nodes.

The **no** variant of this command returns the discovery method to **dynamic**.

Syntax

```
discovery [static|dynamic]
no discovery
```

Parameter	Description
`static`	Statically assigned
`dynamic`	Learned from DCHCPSN or LLDP

Default Dynamic

Mode ATMF Guest Configuration Mode

Usage This command is one of several modal commands that are configured and applied for a specific guest-class (mode) and whose settings are automatically applied to a guest-node link by the switchport atmf-guestlink command.

Example 1 To configure the discovery of the guest-class camera to operate statically, use the following commands:

```
Node1#conf t
Node1(config)#atmf guest-class camera
Node1(config-guest)#discovery static
Node1(config-guest)#end
```

Example 2 To return the discovery method for the guest class TQ4600-1 to its default of **dynamic**, use the following commands:

```
Node1#conf t
Node1(config)#atmf guest-class TQ4600-1
Node1(config-guest)#no discovery
Node1(config-guest)#end
```

Related Commands

atmf guest-class

switchport atmf-guestlink

show atmf links guest

show atmf nodes

description (amf container)

Overview

Use this command to set the description on an AMF container on a Virtual AMF Appliance (VAA).

An AMF container is an isolated instance of AlliedWare Plus with its own network interfaces, configuration, and file system. The features available inside an AMF container are a sub-set of the features available on the host VAA. These features enable the AMF container to function as a uniquely identifiable AMF master and allows for multiple tenants (up to 60) to run on a single VAA host. See the AMF Feature Overview and Configuration Guide for more information on running multiple tenants on a single VAA host.

Use the **no** variant of this command to remove the description from an AMF container.

Syntax

```
description <description>
no description
```

Parameter	Description
<description>	Enter up to 128 characters of text describing the AMF container.

Mode

AMF Container Configuration

Example

To set the description for AMF container “vac-wlg-1” to “Wellington area”, use the commands:

```
awplus# configure terminal
awplus(config)# atmf container vac-wlg-1
awplus(config-atmf-container)# description Wellington area
```

To remove the description for AMF container “vac-wlg-1”, use the commands:

```
awplus# configure terminal
awplus(config)# atmf container vac-wlg-1
awplus(config-atmf-container)# no description
```

Related Commands

atmf container

show atmf container

Command changes

Version 5.4.7-0.1: command added

erase factory-default

Overview This command erases all data from NVS and all data from Flash **excluding** the following:

- the current release file
- the backup release file
- license files

The device is then rebooted and returned to its factory default condition. The device can then be used for AMF automatic node recovery.

Syntax

```
erase factory-default
```

Mode Privileged Exec.

Usage This command is an alias to the atmf cleanup command.

Example To erase data, use the command:

```
Node_1# erase factory-default
```

```
This command will erase all NVS, all flash contents except for
the boot release, and any license files, and then reboot the
switch. Continue? (y/n):y
```

Related Commands atmf cleanup

http-enable

Overview This command is used to enable GUI access to a guest node. When http-enable is configured the port number is set to its default of 80. If the guest node is using a different port for HTTP, you can configure this using the port *<PORTNO>* attribute.

This command is used to inform the GUI that this device has an HTTP interface at the specified port number so that a suitable URL can be provided to the user.

Use the **no** variant of this command to disable HTTP.

Syntax

```
http-enable [port <port-number>]
no http-enable
```

Parameter	Description
`port`	TCP port number.
<port-number>	The port number to be configured.

Default http-enable is off.
If http-enable is selected without a port parameter the port number will default to 80.

Mode ATMF Guest Configuration Mode

Example 1 To enable HTTP access to a guest node on port 80 (the default), use the following commands:

```
node1# conf t
node1(config)#atmf guest-class Camera
node1(config-atmf-guest)#http-enable
node1(config-atmf-guest)#
```

Example 2 To enable HTTP access to a guest node on port 400, use the following commands:

```
node1# conf t
node1(config)#atmf guest-class Camera
node1(config-atmf-guest)#http-enable port 400
node1(config-atmf-guest)#
```

Example 3 To disable HTTP access to a guest node, use the following commands:

```
node1# conf t
node1(config)#atmf guest-class Camera
node1(config-atmf-guest)#no http-enable
node1(config-atmf-guest)#
```

Related Commands

atmf guest-class

switchport atmf-guestlink

show atmf links guest

show atmf nodes

log event-host

Overview Use this command to set up an external host to log AMF topology events through Vista Manager. This command is run on the Master device.

Use the **no** variant of this command to disable log events through Vista Manager.

Syntax

```
log event-host [<ipv4-addr>|<ipv6-addr>] atmf-topology-event
no log event-host [<ipv4-addr>|<ipv6-addr>] atmf-topology-event
```

Parameter	Description
<ipv4-addr>	ipv4 address of the event host
<ipv6-addr>	ipv6 address of the event host

Default Log events are disabled by default.

Mode Global Configuration

Usage Event hosts are set so syslog sends the messages out as they come.

NOTE: *There is a difference between log event and log host messages:*

- Log event messages are sent out as they come by syslog
- Log host messages are set to wait for a number of messages (20) to send them out together for traffic optimization.

Example To enable Node 1 to log event messages from host IP address 192.0.2.31, use the following commands:

```
Node1# configure terminal
Node1(config)# log event-host 192.0.2.31 atmf-topology-event
```

To disable Node 1 to log event messages from host IP address 192.0.2.31, use the following commands:

```
Node1# configure terminal
Node1(config)# no log event-host 192.0.2.31 atmf-topology-event
```

Related Commands atmf topology-gui enable

modeltype

Overview This command sets the expected model type of the guest node. Guest nodes can be one of various types: alliedware, aw+, tq or other. The model type will default to **other** if nothing is set.

Use the **no** variant of this command to reset the model type to **other**.

Syntax

```
modeltype [alliedware|aw+|tq|other]
```

Parameter	Description
`alliedware`	A legacy Allied Telesis operating system.
`aw+`	The Allied Telesis AlliedWare Plus operating system.
`tq`	An Allied Telesis TQ Series wireless access point.
`other`	Used where the model type is outside the above definitions.

Default Will default to **other**

Mode ATMF Guest Configuration Mode

Example 1 To assign the model type **tq** to the guest-class called **tq_device**, use the following commands:

```
node1# conf t
node1(config)# atmf guest-class tq_device
node1(config-atmf-guest)# modeltype tq
node1(config-atmf-guest)# end
```

Example 2 To remove the model type **tq** from the guest-class called **tq_device,** and reset it to the default of **other**, use the following commands:

```
node1# conf t
node1(config)# atmf guest-class tq_device
node1(config-atmf-guest)# no modeltype
node1(config-atmf-guest)# end
```

Related Commands

atmf guest-class

switchport atmf-guestlink

show atmf links guest

show atmf

Overview Displays information about the current AMF node.

Syntax

```
show atmf [summary|tech|nodes|session]
```

Parameter	Description
summary	Displays summary information about the current AMF node.
tech	Displays global AMF information.
nodes	Displays a list of AMF nodes together with brief details.
session	Displays information on an AMF session.

Default Only summary information is displayed.

Mode User Exec and Privileged Exec

Usage AMF uses internal VLANs to communicate between nodes about the state of the AMF network. Two VLANs have been selected specifically for this purpose. Once these have been assigned, they are reserved for AMF and cannot be used for other purposes

For information on filtering and saving command output, see the "Getting Started with AlliedWare Plus" Feature Overview and Configuration Guide.

Example 1 To show summary information on AMF node_1 use the following command:

```
node_1# show atmf summary
```

Table 1: Output from the **show atmf summary** command

```
node_1#show atmf summary
ATMF Summary Information:

ATMF Status             : Enabled
Network Name            : Test_network
Node Name               : node_1
Role                    : Master
Restricted login        : Disabled
Current ATMF Nodes      : 3
```

Example 2 To show information specific to AMF nodes use the following command:

```
node_1# show atmf nodes
```

Example 3 The **show amf session** command displays all CLI (Command Line Interface) sessions for users that are currently logged in and running a CLI session.

To display AMF active sessions, use the following command:

```
node_1# show atmf session
```

For example, in the output below, node_1 and node_5 have active users logged in.

Table 2: Output from the **show atmf session** command

```
node_1#show atmf session

CLI Session Neighbors

Session ID                           : 73518
Node Name                            : node_1
PID                                  : 7982
Link type                            : Broadcast-cli
MAC Address                          : 0000.0000.0000
Options                              : 0
Our bits                             : 0
Link State                           : Full
Domain Controller                    : 0
Backup Domain Controller             : 0
Database Description Sequence Number : 00000000
First Adjacency                      : 1
Number Events                        : 0
DBE Retransmit Queue Length          : 0
DBE Request List Length              : 0
Session ID                           : 410804
Node Name                            : node_5
PID                                  : 17588
Link type                            : Broadcast-cli
MAC Address                          : 001a.eb56.9020
Options                              : 0
Our bits                             : 0
Link State                           : Full
Domain Controller                    : 0
Backup Domain Controller             : 0
Database Description Sequence Number : 00000000
First Adjacency                      : 1
Number Events                        : 0
DBE Retransmit Queue Length          : 0
DBE Request List Length              : 0
```

Example 4 The AMF tech command collects all the AMF commands, and displays them. You can use this command when you want to see an overview of the AMF network.

To display AMF technical information, use the following command:

```
node_1# show atmf tech
```

Table 3: Output from the **show atmf tech** command

```
node_1#show atmf tech
ATMF Summary Information:

ATMF Status           : Enabled
Network Name          : ATMF_NET
Node Name             : node_1
Role                  : Master
Current ATMF Nodes    : 8

ATMF Technical information:

Network Name                        : ATMF_NET
Domain                              : node_1's domain
Node Depth                          : 0
Domain Flags                        : 0
Authentication Type                 : 0
MAC Address                         : 0014.2299.137d
Board ID                            : 287
Domain State                        : DomainController
Domain Controller                   : node_1
Backup Domain Controller            : node2
Domain controller MAC               : 0014.2299.137d
Parent Domain                       : -
Parent Domain Controller            : -
Parent Domain Controller MAC        : 0000.0000.0000
Number of Domain Events             : 0
Crosslink Ports Blocking            : 0
Uplink Ports Waiting on Sync        : 0
Crosslink Sequence Number           : 7
Domains Sequence Number             : 28
Uplink Sequence Number              : 2
Number of Crosslink Ports           : 1
Number of Domain Nodes              : 2
Number of Neighbors                 : 5
Number of Non Broadcast Neighbors   : 3
Number of Link State Entries        : 1
Number of Up Uplinks                : 0
Number of Up Uplinks on This Node   : 0
DBE Checksum                        : 84fc6
Number of DBE Entries               : 0
Management Domain Ifindex           : 4391
Management Domain VLAN              : 4091
Management ifindex                  : 4392
Management VLAN                     : 4092
```

Table 4: Parameter definitions from the **show atmf tech** command

Parameter	Definition
ATMF Status	The Node's AMF status, either Enabled or Disabled.
Network Name	The AMF network that a particular node belongs to.

Table 4: Parameter definitions from the **show atmf tech** command (cont.)

Parameter	Definition
Node Name	The name assigned to a particular node.
Role	The role configured for this AMF device, either Master or Member.
Current ATMF Nodes	The count of AMF nodes in an AMF Network.
Node Address	An address used to access a remotely located node (.atmf).
Node ID	A unique identifier assigned to a Node on an AMF network.
Node Depth	The number of nodes in path from this node to level of the AMF root node. It can be thought of as the vertical depth of the AMF network from a particular node to the zero level of the AMF root node.
Domain State	The state of Node in a Domain in AMF network as Controller/Backup.
Recovery State	The AMF node recovery status. Indicates whether a node recovery is in progress on this device - Auto, Manual, or None.
Management VLAN	The VLAN created for traffic between Nodes of different domain (up/down links). • VLAN ID - In this example VLAN 4092 is configured as the Management VLAN. • Management Subnet - Network prefix for the subnet. • Management IP Address - The IP address allocated for this traffic. • Management Mask - The subnet mask used to create a subnet for this traffic (255.255.128.0).
Domain VLAN	The VLAN assigned for traffic between Nodes of same domain (crosslink). • VLAN ID - In this example VLAN 4091 is configured as the domain VLAN. • Domain Subnet. The subnet address used for this traffic. • Domain IP Address. The IP address allocated for this traffic. • Domain Mask. The subnet mask used to create a subnet for this traffic (255.255.128.0).
Device Type	The Product Series name.
ATMF Master	Whether the node is an AMF master node for its area ('Y' if it is and 'N' if it is not).
SC	The device configuration, one of C - Chassis (SBx8100 Series), S - Stackable (VCS) or N - Standalone.
Parent	The node to which the current node has an active uplink.
Node Depth	The number of nodes in the path from this node to the master node.

Related Commands show atmf detail

show atmf area

Overview Use this command to display information about an AMF area. On AMF controllers, this command displays all areas that the controller is aware of. On remote AMF masters, this command displays the controller area and the remote local area. On gateways, this command displays the controller area and remote master area.

Syntax `show atmf area [detail] [<area-name>]`

Parameter	Description
`detail`	Displays detailed information
`<area-name>`	Displays information about master and gateway nodes in the specified area only.

Mode Privileged Exec

Example 1 To show information about all areas, use the command:

```
controller-1# show atmf area
```

The following figure shows example output from running this command on a controller.

Table 5: Example output from the **show atmf area** command on a Controller.

```
controller-1#show atmf area

  ATMF Area Information:

  * = Local area

  Area               Area   Local         Remote        Remote         Node
  Name               ID     Gateway       Gateway       Master         Count
-------------------------------------------------------------------------
* NZ                 1      Reachable     N/A           N/A             3
  Wellington         2      Reachable     Reachable     Auth OK         120
  Canterbury         3      Reachable     Reachable     Auth Error      -
  SiteA-AREA         14     Unreachable   Unreachable   Unreachable     -
  Auckland           100    Reachable     Reachable     Auth Start      -
  Southland          120    Reachable     Reachable     Auth OK         54

  Area count:        6                            Area node count:     177
```

The following figure shows example output from running this command on a remote master.

Table 6: Example output from the **show atmf area** command on a remote master.

```
Canterbury#show atmf area

  ATMF Area Information:

  * = Local area

  Area               Area   Local          Remote         Remote          Node
  Name               ID     Gateway        Gateway        Master          Count
-------------------------------------------------------------------------------
  NZ                 1      Reachable      N/A            N/A              -
* Canterbury         3      Reachable      N/A            N/A              40

  Area count:        2                        Local area node count:      40
```

Table 7: Parameter definitions from the **show atmf area** command

Parameter	Definition
*	Indicates the area of the device on which the command is being run.
Area Name	The name of each area.
Area ID	The ID of the area.
Local Gateway	Whether the local gateway node is reachable or not.
Remote Gateway	Whether the remote gateway node is reachable or not. This is one of the following: • Reachable, if the link has been established. • Unreachable, if a link to the remote area has not been established. This could mean that a port or vlan is down, or that inconsistent VLANs have been configured using the switchport atmf-arealink remote-area command. • N/A for the area of the controller or remote master on which the command is being run, because the gateway node on that device is local. • Auth Start, which may indicate that the area names match on the controller and remote master, but the IDs do not match. • Auth Error, which indicates that the areas tried to authenticate but there is a problem. For example, the passwords configured on the controller and remote master may not match, or a password may be missing on the remote master.? • Auth OK, which indicates that area authentication was successful and you can now use the atmf select-area command.
Remote Master	Whether the remote master node is reachable or not. This is N/A for the area of the controller or remote master on which the command is being run, because the master node on that device is local.
Node Count	The number of nodes in the area.
Area Count	The number of areas controlled by the controller.
Area Node Count	The total number of nodes in the area.

Example 2 To show detailed information about the areas, use the command:

```
controller-1# show atmf area detail
```

The following figure shows example output from running this command.

Table 8: Output from the **show atmf area detail** command

```
controller-1#show atmf area detail

 ATMF Area Detail Information:

 Controller distance       : 0

 Controller Id             : 21
 Backup Available          : FALSE

 Area Id                   : 2
 Gateway Node Name         : controller-1
 Gateway Node Id           : 342
 Gateway Ifindex           : 6013
 Masters Count             : 1
 Master Node Name          : well-master (329)
 Node Count                : 2

 Area Id                   : 3
 Gateway Node Name         : controller-1
 Gateway Node Id           : 342
 Gateway Ifindex           : 4511
 Masters Count             : 2
 Master Node Name          : cant1-master (15)
 Master Node Name          : cant2-master (454)
 Node Count                : 2
```

Related Commands

show atmf area summary

show atmf area nodes

show atmf area nodes-detail

show atmf area guests

Overview This command will display details of all guests that the controller is aware of.

Syntax `show atmf area guests [<area-name> [<node-name>]]`

Parameter	Description
<area-name>	The area name for guest information
<node-name>	The name of the node that connects to the guests.

Default N/A

Mode User Exec/Privileged Exec

Example 1 To display atmf area guest nodes on a controller, use the command,

```
GuestNode[1]#show atmf area guests
```

Output Figure 47-8: Example output from the **show atmf area guests** command

```
main-building Area Guest Node Information:
Device          MAC                                          IP/IPv6
Type            Address         Parent          Port         Address
-------------------------------------------------------------------------------
-               0008.5d10.7635  x230            1.0.3        192.168.5.4
AT-TQ4600       eccd.6df2.da60  wireless-node1  1.0.4        192.168.5.3
-               0800.239e.f1fe  x230            1.0.4        192.168.4.8
AT-TQ4600       001a.eb3b.dc80  wireless-node2  1.0.7        192.168.4.12

main-building guest node count 4

GuestNode[1]#
```

Table 9: Parameters in the output from **show atmf area guests** command

Parameter	Description
Device Type	The device type as read from the guest node.
MAC Address	The MAC address of the guest-node
Parent	The device that directly connects to the guest-node
Port	The port number on the parent node that connects to the guest node.
IP/IPv6	The IP or IPv6 address of the guest node.

Related Commands

show atmf area

show atmf area nodes

show atmf backup guest

show atmf area guests-detail

show atmf area guests-detail

Overview This command displays the local and remote guest information from an AMF controller.

Syntax

```
show atmf area guests-detail [<area-name> [<node-name>]]
```

Parameter	Description
<area-name>	The name assigned to the AMF area. An area is an AMF network that is under the control of an AMF Controller.
<node-name>	The name assigned to the network node.

Default N/A.

Mode Privileged Exec

Example To display detailed information for all guest nodes attached to "node1", which is located within the area named "northern", use the following command:

```
AMF_controller#show atmf area guests-detail northern node1
```

Output Figure 47-9: Example output from the **show atmf guest detail** command.

```
#show atmf guest detail

Node Name                       : Node1
Port Name                       : port1.0.5
Ifindex                         : 5005
Guest Description               : tq4600
Device Type                     : AT-TQ4600
Configuration Mismatch          : No
Backup Supported                : Yes
MAC Address                     : eccd.6df2.da60
IP Address                      : 192.168.4.50
IPv6 Address                    : Not Set
HTTP Port                       : 80
Firmware Version                :
Node Name                       : poe
Port Name                       : port1.0.6
Ifindex                         : 5006
Guest Description               : tq3600
Device Type                     : AT-TQ2450
Configuration Mismatch          : No
Backup Supported                : Yes
MAC Address                     : 001a.eb3b.cb80
IP Address                      : 192.168.4.9
IPv6 Address                    : Not Set
HTTP Port                       : 80
Firmware Version                :
```

Table 10: Parameters shown in the output of the **show atmf guest detail** command

Parameter	Description
`Node Name`	The name of the guest's parent node.
`Port Name`	The port on the parent node that connects to the guest.
`IFindex`	An internal index number that maps to the port number on the parent node.
`Guest Description`	A brief description of the guest node as manually entered into the description (interface) command for the guest node port on the parent node.
`Device Type`	The device type as supplied by the guest node itself.
`Backup Supported`	Indicates whether AMF supports backup of this guest node.
`MAC Address`	The MAC address of the guest node.
`IP Address`	The IP address of the guest node.
`IPv6 Address`	The IPv6 address of the guest node.
`HTTP Port`	The HTTP port enables you to specify a port when enabling http to allow a URL for the http user interface of a Guest Node. This is determined by the http-enable command.
`Firmware Version`	The firmware version that the guest node is currently running.

Related Commands

show atmf area nodes-detail

show atmf area guests

show atmf area nodes

Overview Use this command to display summarized information about an AMF controller's remote nodes.

Note that this command can only be run from a controller node.

Syntax

```
show atmf area nodes [<area-name> [<node-name>]]
```

Parameter	Description
<area-name>	Displays information about nodes in the specified area.
<node-name>	Displays information about the specified node.

Mode Privileged Exec

Usage If you do not limit the output to a single area or node, this command lists all remote nodes that the controller is aware of. This can be a very large number of nodes.

Example To show summarized information about all the nodes the controller is aware of, use the command:

```
controller-1# show atmf area nodes
```

The following figure shows partial example output from running this command.

Table 11: Output from the **show atmf area nodes** command

```
controller-1#show atmf area nodes

 Wellington Area Node Information:

 Node         Device            ATMF                                Node
 Name         Type              Master  SC    Parent                Depth
 ---------------------------------------------------------------------------
 well-gate    x230-18GP         N       N     well-master             1
 well-master  AT-x930-28GPX     Y       N     none                    0

Wellington node count 2

...
```

Table 12: Parameter definitions from the **show atmf area nodes** command

Parameter	Definition
Node Name	The name assigned to a particular node.
Device Type	The Product series name.

Table 12: Parameter definitions from the **show atmf area nodes** command (cont.)

Parameter	Definition
ATMF Master	Whether the node is an AMF master node for its area ('Y' if it is and 'N' if it is not).
SC	The device configuration, one of C - Chassis (SBx8100 series), S - Stackable (VCS) or N - Standalone.
Parent	The node to which the current node has an active uplink.
Node Depth	The number of nodes in the path from this node to the master node.

Related Commands

show atmf area

show atmf area nodes-detail

show atmf area nodes-detail

Overview Use this command to display detailed information about an AMF controller's remote nodes.

Note that this command can only be run from a controller node.

Syntax

```
show atmf area nodes-detail [<area-name> [<node-name>]]
```

Parameter	Description
<area-name>	Displays detailed information about nodes in the specified area.
<node-name>	Displays detailed information about the specified node.

Mode Privileged Exec

Usage If you do not limit the output to a single area or node, this command displays information about all remote nodes that the controller is aware of. This can be a very large number of nodes.

Example To show information about all the nodes the controller is aware of, use the command:

```
controller-1# show atmf area nodes-detail
```

The following figure shows partial example output from running this command.

Table 13: Output from the **show atmf area nodes-detail** command

```
controller-1#show atmf area nodes-detail

Wellington Area Node Information:
  Node name  well-gate
  Parent node name    : well-master
  Domain id           : well-gate's domain
  Board type          : 368
  Distance to core    : 1
  Flags               : 50
  Extra flags         : 0x00000006
  MAC Address         : 001a.eb56.9020

Node name well-master
  Parent node name    : none
  Domain id           : well-master's domain
  Board type          : 333
  Distance to core    : 0
  Flags               : 51
  Extra flags         : 0x0000000c
  MAC Address         : eccd.6d3f.fef7

...
```

Table 14: Parameter definitions from the **show atmf area nodes-detail** command

Parameter	Definition
`Node name`	The name assigned to a particular node.
`Parent node name`	The node to which the current node has an active uplink.
`Domain id`	
`Board type`	The Allied Telesis code number for the device.
`Distance to core`	The number of nodes in the path from the current node to the master node in its area.
`Flags`	Internal AMF information
`Extra flags`	Internal AMF information
`MAC Address`	The MAC address of the current node

Related Commands

show atmf area

show atmf area nodes

show atmf area summary

Overview Use this command to display a summary of IPv6 addresses used by AMF, for one or all of the areas controlled by an AMF controller.

Syntax

```
show atmf area summary [<area-name>]
```

Parameter	Description
<area-name>	Displays information for the specified area only.

Mode Privileged Exec

Example 1 To show a summary of IPv6 addresses used by AMF, for all of the areas controlled by controller-1, use the command:

```
controller-1# show atmf area summary
```

The following figure shows example output from running this command.

Table 15: Output from the **show atmf area summary** command

```
controller-1#show atmf area summary

 ATMF Area Summary Information:

Management Information
 Local IPv6 Address              : fd00:4154:4d46:1::15

Area Information
 Area Name                       : NZ (Local)
 Area ID                         : 1
 Area Master IPv6 Address        : -

 Area Name                       : Wellington
 Area ID                         : 2
 Area Master IPv6 Address        : fd00:4154:4d46:2::149

 Area Name                       : Canterbury
 Area ID                         : 3
 Area Master IPv6 Address        : fd00:4154:4d46:3::f

 Area Name                       : Auckland
 Area ID                         : 100
 Area Master IPv6 Address        : fd00:4154:4d46:64::17
 Interface                       : vlink2000
```

Related Commands

show atmf area

show atmf area nodes

show atmf area nodes-detail

show atmf authorization

Overview Use this command on an AMF master to display the authorization status of other AMF members and masters on the network.

On an AMF controller this command will show the authorization status of remote area AMF masters.

Syntax

```
show atmf authorization {current|pending|provisional}
```

Parameter	Description
`current`	Show the status of all authorized nodes.
`pending`	Show the status of unauthorized nodes in the pending queue. These are nodes that enabled secure mode with atmf secure-mode but have not yet been authorized with atmf authorize.
`provisional`	Show the status of provisionally authorized nodes. These are nodes that have been provisioned with atmf authorize provision.

Mode Privileged Exec

Example To display all authorized AMF nodes on an AMF controller or AMF master, use the command:

```
awplus# show atmf authorization current
```

To display AMF nodes which are requesting authorization on an AMF controller or AMF master, use the command:

```
awplus# show atmf authorization pending
```

To display AMF nodes which have provisional authorization, use the command:

```
awplus# show atmf authorization provisional
```

Output Figure 47-10: Example output from **show atmf authorization current**

```
  NZ Authorized Nodes:
  Node Name             Signer                Expires
-----------------------------------------------------------------
  master_1              master_1              4 Mar 2017
  area_1_node_1         master_1              4 Mar 2017
  area_1_node_2         master_1              4 Mar 2017
```

Table 47-1: Parameters in the output from **show atmf authorization current**

Parameter	Description
Node Name	AMF node name of the authorized node.
Signer	Name of the AMF master that authorized the node.
Expires	Expiry date of the authorization. Authorization expiry time is set using atmf secure-mode certificate expiry.

Output Figure 47-11: Example output from **show atmf authorization pending**

```
  Pending Authorizations:

  NZ Requests:
  Node Name           Product          Parent Node      Interface
-------------------------------------------------------------------
  area_1_node_3       x230-18GP        master_1         port1.2.9
  area_1_node_4       x510-52GTX       master_1         sa1
```

Table 47-2: Parameters in the output from **show atmf authorization pending**

Parameter	Description
Node Name	Name of the node that is requesting authorization.
Product	Product name.
Parent Node	Authorization authority of the requesting node.
Interface	Interface that the authorization request came in on.

Output Figure 47-12: Example output from **show atmf authorization provisional**

```
 ATMF Provisional Authorization:

  Area - Node Name                  Start                  Timeout
  or MAC Address      Interface     Time                   Minutes
-------------------------------------------------------------------
  3333.4444.5555                    5 Sep 2016 02:35:54     3
  1111.2222.3333                    5 Sep 2016 02:35:24     60
  NZ - blue           port1.0.3     5 Sep 2016 02:35:06     60
```

Table 47-3: Parameters in the output from **show atmf authorization provisional**

Parameter	Description
`Area - Node Name or MAC Address`	MAC address or node name of the node that has been provisionally authorized.
`Interface`	Interface that the node has been provisioned on.
`Start Time`	Time the node was provisioned.
`Timeout Minutes`	Length of time from `Start Time` until the provisional authorization expires.

Related Commands

atmf authorize

atmf authorize provision

atmf secure-mode

clear atmf secure-mode certificates

show atmf

show atmf secure-mode

show atmf secure-mode certificates

Command changes

Version 5.4.7-0.3: command added

show atmf backup

Overview This command displays information about AMF backup status for all the nodes in an AMF network. It can only be run on AMF master and controller nodes.

Syntax

```
show atmf backup [logs|server-status|synchronize [logs]]
```

Parameter	Description
`logs`	Displays detailed log information.
`server-status`	Displays connectivity diagnostics information for each configured remote file server.
`synchronize`	Display the file server synchronization status
`logs`	For each remote file server, display the logs for the last synchronization

Mode Privileged Exec

Example 1 To display the AMF backup information, use the command:

```
node_1# show atmf backup
```

To display log messages to do with backups, use the command:

```
node_1# show atmf backup logs
```

Table 47-4: Output from **show atmf backup**

```
Node_1# show atmf backup
ScheduledBackup ......Enabled
  Schedule.............1 per day starting at 03:00
  Next Backup Time....01 Oct 2016 03:00
Backup Bandwidth .....Unlimited
Backup Media..........SD (Total 1974.0 MB, Free197.6MB)
Current Action........Starting manual backup
Started...............30 Sep 2016 10:08
CurrentNode...........atmf_testbox1
Backup Redundancy ....Enabled
  Local media ........SD (Total 3788.0MB, Free 3679.5MB)
  State ..............Active

Node Name                Date         Time      In ATMF  On Media   Status
-------------------------------------------------------------------------------
atmf_testbox1            30 Sep 2016  09:58:59  Yes      Yes        In Progress
atmf_testbox2            30 Sep 2016  10:01:23  Yes      Yes        Good
```

Table 47-5: Output from **show atmf backup logs**

```
Node_1#show atmf backup logs

Backup Redundancy ..... Enabled
Local media ......... SD (Total 3788.0MB, Free 1792.8MB)
State ............... Inactive (Remote file server is not available)

Log File Location: card:/atmf/ATMF/logs/rsync_<node name>.log

Node
Name Log Details
-------------------------------------------------------------------------------
atmf_testbox
2016/09/30 18:16:51 [9045] receiving file list
2016/09/30 18:16:51 [9047] .d..t.... flash/
2016/09/30 18:16:52 [9047] >f+++++++ flash/a.rel
```

Example 2 To display the AMF backup synchronization status, use the command:

```
node_1# show atmf backup synchronize
```

To display log messages to do with synchronization of backups, use the command:

```
node_1# show atmf backup synchronize logs
```

Table 47-6: Output from **show atmf backup synchronize**

```
Node_1#show atmf backup synchronize

ATMF backup synchronization:

 * = Active file server

  Id  Date          Time       Status
-------------------------------------------------------------------
  1   30 Sep 2016   22:25:57   Synchronized
* 2   -             -          Active
```

Table 47-7: Output from **show atmf backup synchronize logs**

```
Node_1#show atmf backup synchronize logs

Id    Log Details
-------------------------------------------------------------------------------
1     2016/09/30 22:25:54 [8039] receiving file list
      2016/09/30 22:25:54 [8039] >f..t.... backup_Box1.info
      2016/09/30 22:25:54 [8039] sent 46 bytes received 39 bytes total size 40
```

Example 3 To display the AMF backup information with the optional parameter **server-status**, use the command:

```
Node_1# show atmf backup server-status
```

```
Node1#sh atmf backup server-status

Id   Last Check    State
-------------------------------------
1    186 s         File server ready
2    1 s           SSH no route to host
```

Table 48: Parameter definitions from the **show atmf backup** command

Parameter	Definition
Scheduled Backup	Indicates whether AMF backup scheduling is enabled or disabled.
Schedule	Displays the configured backup schedule.
Next Backup Time	Displays the date and time of the next scheduled.
Backup Media	The current backup medium in use. This will be SD or NONE. SD card only (and not USB) is supported for AMF backup. Utilized and available memory (MB) will be indicated if backup media memory is present.
Current Action	The task that the AMF backup mechanism is currently performing. This will be a combination of either (Idle, Starting, Doing, Stopping), or (manual, scheduled).
Started	The date and time that the currently executing task was initiated in the format DD MMM YYYY HH:MM
Current Node	The name of the node that is currently being backed up.
Backup Redundancy	Whether backup redundancy is enabled or disabled.
Local media	The local media to be used for backup redundancy; SD or USB or NONE, and total and free memory available on the media.
State	Whether SD or USB media is installed and available for backup redundancy. May be Active (if backup redundancy is functional—requires both the local redundant backup media and a remote server to be configured and available) or Inactive.
Node Name	The name of the node that is storing backup data - on its backup media.
Date	The data of the last backup in the format DD MMM YYYY.
Time	The time of the last backup in the format HH:MM:SS.
In ATMF	Whether the node shown is active in the AMF network, (Yes or No).
On Media	Whether the node shown has a backup on the backup media (Yes or No).

Table 48: Parameter definitions from the **show atmf backup** command (cont.)

Parameter	Definition
`Status`	The output can contain one of four values: • "-" meaning that the status file cannot be found or cannot be read. • "Errors" meaning that there are issues - note that the backup may still be deemed successful depending on the errors. • "Stopped" meaning that the backup attempt was manually aborted. • "Good" meaning that the backup was completed successfully. • "In Progress" meaning that the backup is currently running on that node.
`Log File Location`	All backup attempts will generate a result log file in the identified directory based on the node name. In the above example this would be: card:/amf/office/logs/rsync_amf_testbox1.log.
`Log Details`	The contents of the backup log file.
`server-status`	Displays connectivity diagnostics information for each configured remove file server.

For information on filtering and saving command output, see the "Getting Started with AlliedWare Plus" Feature Overview and Configuration Guide.

Related Commands

show atmf

atmf network-name

show atmf backup area

Overview Use this command to display backup status information for the master nodes in one or more areas.

Note that this command is only available on AMF controllers.

Syntax

```
show atmf backup area [<area-name> [<node-name>]] [logs]
```

Parameter	Description
`logs`	Displays the logs for the last backup of each node.
<area-name>	Displays information about nodes in the specified area.
<node-name>	Displays information about the specified node.

Mode Privileged Exec

Example To show information about backups for an area, use the command:

```
controller-1# show atmf backup area
```

Table 49: Output from the **show atmf backup area** command

```
controller-1#show atmf backup area

Scheduled Backup ...... Enabled
  Schedule ............ 12 per day starting at 14:30
  Next Backup Time .... 15 Oct 2016 04:30
Backup Bandwidth ...... Unlimited
Backup Media .......... FILE SERVER 1 (Total 128886.5MB, Free 26234.2MB)
Server Config .........
 * 1 .................. Configured   (Mounted, Active)
    Host ............. 10.37.74.1
    Username .......... root
    Path .............. /tftpboot/backups_from_controller-1
    Port .............. -
   2 .................. Configured   (Unmounted)
    Host ............. 10.37.142.1
    Username .......... root
    Path .............. -
    Port .............. -
Current Action ........ Idle
  Started ............. -
  Current Node ........ -

Backup Redundancy ..... Enabled
  Local media ......... USB (Total 7604.0MB, Free 7544.0MB)
  State ............... Active

Area Name          Node Name            Id   Date          Time       Status
-------------------------------------------------------------------------------
Wellington         camry                1    14 Oct 2016   02:30:22   Good
Canterbury         corona               1    14 Oct 2016   02:30:23   Good
Canterbury         Avensis              1    14 Oct 2016   02:30:22   Good
Auckland           RAV4                 1    14 Oct 2016   02:30:23   Good
Southland          MR2                  1    14 Oct 2016   02:30:24   Good
```

Related Commands

atmf backup area-masters enable

show atmf area

show atmf area nodes-detail

switchport atmf-arealink remote-area

show atmf backup guest

Overview This command displays backup status information of guest nodes in an AMF network.This command can only be run on a device configured as an AMF Master and has an AMF guest license.

Syntax

```
show atmf backup guest [<node-name> [<guest-port>]] [logs]
```

Parameter	Description
<node-name>	The name of parent guest node
<guest-port>	The port number on the parent node

Mode User Exec/Privileged Exec

Example On the switch named x930-master, to display information about the AMF backup guest status, use the command:

```
x930-master# show atmf backup guest
```

Output Figure 47-13: Example output from **show atmf backup guest**

```
x930-master#sh atmf backup guest
Guest Backup .......... Enabled
Scheduled Backup ...... Disabled
  Schedule ............ 1 per day starting at 03:00
  Next Backup Time .... 20 Jan 2016 03:00
Backup Bandwidth ...... Unlimited
Backup Media .......... FILE SERVER 2 (Total 655027.5MB,
                        Free 140191.5MB)
Server Config
 1 ................... Configured (Mounted)
 Host ............... 11.0.24.1
 Username ........... bob
 Path ............... guest-project
 Port ............... -
* 2 ................... Configured (Mounted, Active)
 Host ............... 11.0.24.1
 Username ........... bob
 Path ............... guest-project-second
Port..................-
Current Action .......Idle
Started ............. -
Current Node ........ -
Backup Redundancy ....Enabled
Local media ......... USB (Total 7376.0MB, Free 7264.1MB)
State ............... Active
```

```
Parent Node Name      Port Name        Id     Date           Time          Status
-------------------------------------------------------------------------------
x230                  port1.0.4        2      19 Jan 2016    22:21:46      Good
                                       1      19 Jan 2016    22:21:46      Good
                                       USB    19 Jan 2016    22:21:46      Good
```

Table 47-1: Parameters in the output from **show atmf backup guest**

Parameter	Description
Guest Backup	The status of the guest node backup process
Scheduled Backup	The timing configured for guest backups.
Schedule	Displays the configured backup schedule.
Next Backup Time	The time the next backup process will be initiated.
Backup Bandwidth	The bandwidth limit applied to the backup data flow measured in kilo Bytes /second. Note that unlimited means there is no limit set specifically for the backup data flow.
Backup Media	Detail of the memory media used to store the backup files and the current memory capacity available.

Related Commands

show atmf backup area

show atmf backup

show atmf links guest

show atmf nodes

show atmf backup guest

atmf backup guests delete

atmf backup guests enable

show atmf container

Overview Use this command to display information about the AMF containers created on a a Virtual AMF Appliance (VAA).

An AMF container is an isolated instance of AlliedWare Plus with its own network interfaces, configuration, and file system. The features available inside an AMF container are a sub-set of the features available on the host VAA. These features enable the AMF container to function as a uniquely identifiable AMF master and allows for multiple tenants (up to 60) to run on a single VAA host. See the AMF Feature Overview and_Configuration Guide for more information on running multiple tenants on a single VAA host.

Syntax

```
show atmf container [detail] [<container-name>]
```

Parameter	Description
`detail`	Show detailed information.
<container-name>	The name of the AMF container you wish to display information for.

Mode Privileged Exec

Output Figure 47-14: Example output from **show atmf container**

```
awplus#show atmf container

ATMF Container Information:

  Container       Area        Bridge   State      Memory    CPU%
-------------------------------------------------------------------
  vac-wlg-1       wlg         br1      running    70.3 MB   1.2
  vac-akl-1       akl         br2      stopped    0 bytes   0.0
  vac-nsn-1       nsn         br3      running    53.2 MB   0.7

Current ATMF Container count: 3
```

Figure 47-15: Example output from **show atmf container vac-wlg-1**

```
awplus#show atmf container vac-wlg-1

ATMF Container Information:

  Container       Area        Bridge   State      Memory    CPU%
-------------------------------------------------------------------
  vac-wlg-1       wlg         br1      running    70.3 MB   1.2

Current ATMF Container count: 1
```

Table 47-2: Parameters in the output from **show atmf container**

Parameter	Description
Container	Name of the AMF container.
Area	Name of the area the container is in.
Bridge	Name of the bridge connecting the container to the physical network.
State	Container state, running or stopped. This is set with the state command.
Memory	The amount of memory the container is using on the VAA host.
CPU%	The percentage of CPU time the container is using on the VAA, at the time the show command is run.

Figure 47-16: Example output from **show atmf container detail vac-wlg-1**

```
awplus#show atmf container detail vac-wlg-1

ATMF Container Information:

Name: vac-wlg-1
State: RUNNING
PID: 980
IP: 172.31.0.1
IP: 192.168.0.2
IP: fd00:4154:4d46:3c::1
CPU use: 3.95 seconds
Memory use: 67.07 MiB
Memory use: 0 bytes
Link: vethP31UFA
TX bytes: 166.01 KiB
RX bytes: 141.44 KiB
Total bytes: 307.45 KiB
Link: vethYCT7BB
TX bytes: 674.27 KiB
RX bytes: 698.27 KiB
Total bytes: 1.34 MiB
```

Table 47-3: Parameters in the output from **show atmf container detail**

Parameter	Description
Name	Name of the AMF container.
State	Container state, RUNNING or STOPPED. This is set with the state command.

Table 47-3: Parameters in the output from **show atmf container detail** (cont.)

Parameter	Description
PID	Internal container id.
IP	This lists the IP addresses used by the container. These include the eth1 IP address and the AMF management IP address.
CPU use	The CPU usage of the container since it was enabled.
Memory use	Container memory usage.
Link	Each container has two links: 1 An AMF area-link, this connects the container to the AMF controller and uses virtual interface eth0 on the AMF container. 2 A bridged L2 network link, this connects the container to the outside world and uses the virtual interface eth1 on the AMF container. See the AMF Feature Overview and Configuration_Guide for more information on these links.
TX/RX bytes	Bytes sent and received on a link.
Total bytes	Total bytes transferred on a link.

Related Commands

area-link

atmf area

atmf area password

atmf container

atmf container login

bridge-group

description (amf container)

state

Command changes

Version 5.4.7-0.1: command added

show atmf detail

Overview This command displays details about an AMF node. It can only be run on AMF master and controller nodes.

Syntax

```
show atmf detail
```

Parameter	Description
`detail`	Displays output in greater depth.

Mode Privileged Exec

Example 1 To display the AMF node1 information in detail, use the command:

```
controller-1# show atmf detail
```

A typical output screen from this command is shown below:

```
atmf-1#show atmf detail
ATMF Detail Information:

Network Name                        : Test_network
Network Mtu                         : 1300
Node Name                           : controller-1
Node Address                        : controller-1.atmf
Node ID                             : 342
Node Depth                          : 0
Domain State                        : BackupDomainController
Recovery State                      : None
Log Verbose Setting                 : Verbose

Management VLAN
 VLAN ID                            : 4000
 Management Subnet                  : 172.31.0.0
 Management IP Address              : 172.31.1.86
 Management Mask                    : 255.255.128.0
 Management IPv6 Address            : fd00:4154:4d46:1::156
 Management IPv6 Prefix Length      : 64

Domain VLAN
 VLAN ID                            : 4091
 Domain Subnet                      : 172.31.128.0
 Domain IP Address                  : 172.31.129.86
 Domain Mask                        : 255.255.128.0
```

Table 48: Parameter definitions from the **show atmf detail** command

Parameter	Definition
`Network MTU`	The network MTU for the ATMF network.
`Network Name`	The AMF network that a particular node belongs to.
`Node Name`	The name assigned to a particular node.
`Node Address`	An Address used to access a remotely located node. This is simply the Node Name plus the dotted suffix atmf (.atmf).
`Node ID`	A Unique identifier assigned to a Node on an AMF network.
`Node Depth`	The number of nodes in path from this node to level of the AMF root node. It can be thought of as the vertical depth of the AMF network from a particular node to the zero level of the AMF root node.
`Domain State`	The state of Node in a Domain in AMF network as Controller/Backup.
`Recovery State`	The AMF node recovery status. Indicates whether a node recovery is in progress on this device - Auto, Manual, or None.
`Management VLAN`	The VLAN created for traffic between Nodes of different domain (up/down links). • VLAN ID - In this example VLAN 4092 is configured as the Management VLAN. • Management Subnet - Network prefix for the subnet. • Management IP Address - The IP address allocated for this traffic. • Management Mask - The subnet mask used to create a subnet for this traffic (255.255.128.0).
`Domain VLAN`	The VLAN assigned for traffic between Nodes of same domain (crosslink). • VLAN ID - In this example VLAN 4091 is configured as the domain VLAN. • Domain Subnet. The subnet address used for this traffic. • Domain IP Address. The IP address allocated for this traffic. • Domain Mask. The subnet mask used to create a subnet for this traffic (255.255.128.0).
`Node Depth`	The number of nodes in the path from this node to the Core domain.

show atmf group

Overview This command can be used to display the group membership within to a particular AMF node. It can also be used with the working-set command to display group membership within a working set.

Each node in the AMF is automatically added to the group that is appropriate to its hardware architecture, e.g. x510, x230. Nodes that are configured as masters are automatically assigned to the master group.

You can create arbitrary groups of AMF members based on your own selection criteria. You can then assign commands collectively to any of these groups.

Syntax

```
show atmf group [user-defined|automatic]
```

Parameter	Description
`user-defined`	User-defined-group information display.
`automatic`	Automatic group information display.

Default All groups are displayed

Mode Privileged Exec

Example 1 To display group membership of node2, use the following command:

```
node2# show atmf group
```

A typical output screen from this command is shown below:

```
ATMF group information

master, x510

node2#
```

This screen shows that node2 contains the groups **master** and **x510**. Note that although the node also contains the implicit groups, these do not appear in the show output.

Example 2 The following commands (entered on *node2*) will display all the automatic groups within the working set containing *node1* and all nodes that have been pre-defined to contain the *sysadmin* group:

First define the working-set:

```
node1# #atmf working-set node1 group sysadmin
```

A typical output screen from this command is shown below:

```
ATMF group information

master, poe, x8100


================================================
node1, node2, node3, node4, node5, node6:
================================================

ATMF group information

sysadmin, x8100

AMF_NETWORK[6]#
```

This confirms that the six nodes (*node1* to *node6*) are now members of the working-set and that these nodes reside within the *AMF-NETWORK*.

Note that to run this command, you must have previously entered the command atmf working-set on page 2178. This can be seen from the network level prompt, which in this case is *AMF_NETWORK[6]#*.

Table 49: Sample output from the **show atmf group** command for a working set.

```
AMF_NETWORK[6]#show atmf group
==============================
node3, node4, node5, node6:
==============================

ATMF group information

edge_switches, x510
```

Table 50: Parameter definitions from the **show atmf group** command for a working set

Parameter	Definition
`ATMF group information`	Displays a list of nodes and the groups that they belong to, for example: • master - Shows a common group name for Nodes configured as AMF masters. • Hardware Arch - Shows a group for all Nodes sharing a common Hardware architecture, e.g. x8100, x230, for example. • User-defined - Arbitrary groups created by the user for AMF nodes.

show atmf group members

Overview This command will display all group memberships within an AMF working-set. Each node in the AMF working set is automatically added to automatic groups which are defined by hardware architecture, e.g. x510, x230. Nodes that are configured as masters are automatically assigned to the master group. Users can define arbitrary groupings of AMF members based on their own criteria, which can be used to select groups of nodes.

Syntax

```
show atmf group members [user-defined|automatic]
```

Parameter	Description
`user-defined`	User defined group membership display.
`automatic`	Automatic group membership display.

Mode Privileged Exec

Example To display group membership of all nodes in a working-set, use the command:

```
ATMF_NETWORK[9]# show atmf group members
```

Table 51: Sample output from the **show atmf group members** command

```
ATMF Group membership

Automatic         Total
Groups            Members   Members
------------------------------------------------------------
master            1         Building_1
poe               1         HW_Team1
x510              3         SW_Team1 SW_Team2 SW_Team3
x930              1         HW_Team1
x8100             2         Building_1 Building_2

ATMF Group membership

User-defined      Total
Groups            Members   Members
------------------------------------------------------------
marketing           1       Bld1_Floor_1
software            3       SW_Team1 SW_Team2 SW_Team3
```

Table 52: Parameter definitions from the **show atmf group members** command

Parameter	Definition
`Automatic Groups`	Lists the Automatic Groups and their nodal composition. The sample output shows AMF nodes based on the same Hardware type or belonging to the same Master group.
`User-defined Groups`	Shows the grouping of AMF nodes in user defined groups.
`Total Members`	Shows the total number of members in each group.
`Members`	Shows the list of AMF nodes in each group.

Related Commands

show atmf group

show atmf

atmf group (membership)

show atmf guests

Overview This command is available on any AMF master or controller in the network. It displays a summary of the AMF guest nodes that exist in the AMF network, including device type, parent node, and IP address.

Syntax
```
show atmf guests
```

Mode User Exec/Privileged Exec

Usage Use this command to display all guest nodes in a network. If you want to see only the guests attached to a single node, use the show atmf links guest command, which shows information about the guest nodes and also about their link to their parent node.

Example To display the AMF guest output, use the command:

```
awplus# show atmf guests
```

Output Figure 47-17: Example output from the **show atmf guests** command

```
master#show atmf guests

  Guest Information:

  Device          Device          Parent      Guest     IP/IPv6
  Name            Type            Node        Port      Address
-------------------------------------------------------------------------
  node1-2.0.1     x600-24Ts       node1       2.0.1     192.168.2.10
  wireless-zone1  AT-TQ4600       node2       1.0.1     192.168.1.10
  wireless-zone2  AT-TQ4600       node2       1.0.2     192.168.1.12

  Current ATMF guest node count 3
```

Table 53: Parameters shown in the output of the **show atmf guests** command

Parameter	Description
Device Name	The name that is discovered from the device, or failing that, a name that is auto-assigned by AMF. The auto-assigned name consists of: <parent node name>-<attached port number> You can change this by configuring a description on the port.
Device Type	The product name of the guest node, which is discovered from the device. If no device type can be discovered, this shows the name of the AMF guest-class that has been assigned to the guest node by the atmf guest-class command.

Table 53: Parameters shown in the output of the **show atmf guests** command

Parameter	Description
`Parent Node`	The name of the AMF node that directly connects to the guest node.
`Guest Port`	The port on the parent node that directly connects to the guest node.
`IP/IPv6 Address`	The address discovered from the node, or statically configured on the parent node's attached port.

Related Commands

atmf guest-class

switchport atmf-guestlink

show atmf backup guest

show atmf links guest

show atmf guests detail

Overview This command is available on any AMF master in the network. It displays details about the AMF guest nodes that exist in the AMF network, such as device type, IP address, MAC address etc.

Syntax

```
show atmf guests detail [<node-name>] [<guest-port>]
```

Parameter	Description
<node-name>	The name of the guest node's parent.
<guest-port>	The port name on the parent node.

Mode User Exec/Privileged Exec

Usage If you want to see only the guests attached to a single node, you can use either:

- this command and specify the node name, or
- show atmf links guest detail, which shows information about the guest nodes and also about their link to their parent node.

Note that the parameters that are displayed depend on the guest node's model.

Example To display the AMF guest output, use the command:

```
awplus# show atmf guests detail
```

Output Figure 47-18: Example output from **show atmf guests detail**

```
master#show atmf guests detail

ATMF Guest Node Information:

Node Name                       : master
Port Name                       : port1.0.9
Ifindex                         : 5009
Guest Description               : red-1.0.9
Device Type                     : x600-24Ts
Backup Supported                : No
MAC Address                     : 0000.cd38.0c4d
IP Address                      : 192.168.1.5
IPv6 Address                    : Not Set
HTTP Port                       : 0
Firmware Version                : 5.4.2-0.1
```

```
Node Name                       : node1
Port Name                       : port1.0.13
Ifindex                         : 5013
Guest Description               : node1-1.0.13
Device Type                     : AT-TQ4600
Backup Supported                : Yes
MAC Address                     : eccd.6df2.daa0
IP Address                      : 192.168.5.6
IPv6 Address                    : Not Set
HTTP Port                       : 80
Firmware Version                : 3.1.0 B01
```

Table 54: Parameters in the output from **show atmf guests detail**.

Parameter	Description
Node Name	The name of the parent node, which is the AMF node that directly connects to the guest node.
Port Name	The port on the parent node that connects to the guest.
IfIndex	An internal index number that maps to the port number on the parent node.
Guest Description	A description that is discovered from the device, or failing that, auto-assigned by AMF. The auto-assigned name consists of: <parent node name>-<attached port number>. You can change this by configuring a description on the port.
Device Type	The product name of the guest node, which is discovered from the device. If no device type can be discovered, this shows the name of the AMF guest-class that has been assigned to the guest node by the atmf guest-class command.
Username	The user name configured on the guest node.
Backup Supported	Whether the guest node supports AMF backup functionality.
MAC Address	The MAC address of the guest node.
IP Address	The IP address of the guest node.
IPv6 Address	The IPv6 address of the guest node.
Firmware Version	The version of the firmware operating on the guest node.
HTTP port	The HTTP port as specified with the http-enable command when defining a guest class. You can set this if the guest node provides an HTTP user interface on a non-standard port (any port other than port 80).

Related Commands

atmf guest-class

switchport atmf-guestlink

show atmf backup guest

show atmf links

Overview This command displays information about AMF links on a switch. The display output contains link status state information.

Syntax

```
show atmf links [brief]
```

Parameter	Description
`brief`	A brief summary of AMF links, their configuration and status.

Mode User Exec and Privileged Exec

Usage The **show atmf links** and **show atmf links brief** commands both produce a table of summarized link information. For a more detailed view use the show atmf links detail command.

Example To display a brief summary of the AMF links, use the following command:

```
node-1# show atmf links brief
```

Figure 47-19: Example output from **show atmf links brief**

```
Example-core# show atmf links

ATMF Link Brief Information:

Local      Link       Link    ATMF         Adjacent       Adjacent    Link
Port       Type       Status  State        Node           Ifindex     State
-------------------------------------------------------------------------
1.0.10     Crosslink  Down    Init         *crosslink1     -          Blocking
1.0.14     Crosslink  Down    Init         *crosslink2     -          Blocking
1.0.1      Downlink   Down    Init         -               -          Blocking
1.0.2      Downlink   Up      Full         Node2           5001       Forwarding
1.0.8      Downlink   Up      Full         downlink1       5001       Forwarding

* = Provisioned.
```

Table 47-1: Parameter in the output from **show atmf links brief**

Parameter	Definition
`Local Port`	Shows the local port on the selected node.
`Link Type`	Shows link type as Uplink or Downlink (parent and child) or Cross-link (nodes in same domain).
`Link Status`	Shows the link status of the local port on the node as either Up or Down.

Table 47-1: Parameter in the output from **show atmf links brief** (cont.)

Parameter	Definition
ATMF State	Shows AMF state of the local port: • Init - Link is down. • Hold - Link transitioned to up state, but waiting for hold period to ensure link is stable. • Incompatible - Neighbor rejected the link because of inconsistency in AMF configurations. • OneWay - Link is up and has waited the hold down period and now attempting to link to another unit in another domain. • OneWaySim - Device is running in secure mode and link is up but waiting for authorization from an AMF master. • Full - Link hello packets are sent and received from its neighbor with its own node id. • Shutdown - Link has been shut down by user configuration.
Adjacent Node	Shows the Adjacent AMF Node to the one being configured.
Adjacent IF Index	Shows the IF index for the Adjacent AMF Node connected to the node being configured.
Link State	Shows the state of the AMF link. Valid states are either Forwarding or Blocking.

For information on filtering and saving command output, see the "Getting Started with AlliedWare_Plus" Feature Overview and Configuration Guide.

Related Commands

no debug all

clear atmf links statistics

show atmf

show atmf links detail

show atmf links guest

show atmf links guest detail

show atmf links statistics

show atmf nodes

show atmf links detail

Overview This command displays detailed information on all the links configured in the AMF network. It can only be run on AMF master and controller nodes.

Syntax

```
show atmf links detail
```

Parameter	Description
`detail`	Detailed AMF links information.

Mode User Exec

Example To display the AMF link details use this command:

```
device1# show atmf links detail
```

The output from this command will display all the internal data held for AMF links. The following example gives details of the links that are summarized in the example in show atmf links.

Table 48: Sample output from the **show atmf links detail** command

```
device1# show atmf links detail

-------------------------------------------------------------------------------
Crosslink Ports Information
-------------------------------------------------------------------------------
Port                              : sa1
Ifindex                           : 4501
Port Status                       : Down
Port State                        : Init
Last event                        :
Port BPDU Receive Count           : 0
Port                              : po10
Ifindex                           : 4610
Port Status                       : Up
Port State                        : Full
Last event                        : AdjNodeLSEPresent
Port BPDU Receive Count           : 140
Adjacent Node Name                : Building-B
Adjacent Ifindex                  : 4610
Adjacent MAC                      : eccd.6dd1.64d0
Port Last Message Response        : 0
```

Table 48: Sample output from the **show atmf links detail** command (cont.)

```
Port                                : po30
Ifindex                             : 4630
Port Status                         : Up
Port State                          : Full
Last event                          : AdjNodeLSEPresent
Port BPDU Receive Count             : 132
Adjacent Node Name                  : Building-A
Adjacent Ifindex                    : 4630
Adjacent MAC                        : eccd.6daa.c861
Port Last Message Response          : 0

Link State Entries:

Crosslink Ports Blocking            : False
Node.Ifindex                        : Building-A.4630 - Example-core.4630
Transaction ID                      : 2 - 2
MAC Address                         : eccd.6daa.c861 - 0000.cd37.054b
Link State                          : Full - Full

Node.Ifindex                        : Building-B.4610 - Example-core.4610
Transaction ID                      : 2 - 2
MAC Address                         : eccd.6dd1.64d0 - 0000.cd37.054b
Link State                          : Full - Full

Domain Nodes Tree:

Node                                : Building-A
  Links on Node                     : 1
  Link 0                            : Building-A.4630 - Example-core.4630
  Forwarding State                  : Forwarding
Node                                : Building-B
  Links on Node                     : 1
  Link 0                            : Building-B.4610 - Example-core.4610
  Forwarding State                  : Forwarding
Node                                : Example-core
  Links on Node                     : 2
  Link 0                            : Building-A.4630 - Example-core.4630
  Forwarding State                  : Forwarding
  Link 1                            : Building-B.4610 - Example-core.4610
  Forwarding State                  : Forwarding
Crosslink Transaction Entries:

Node                                : Building-B
Transaction ID                      : 2
Uplink Transaction ID               : 6
Node                                : Building-A
Transaction ID                      : 2
Uplink Transaction ID               : 6

Uplink Information:

Waiting for Sync                    : 0
Transaction ID                      : 6
Number of Links                     : 0
Number of Local Uplinks             : 0
```

Table 48: Sample output from the **show atmf links detail** command (cont.)

```
Originating Node                    : Building-A
Domain                              : -'s domain
Node                                : Building-A
Ifindex                             : 0
Node Depth                          : 0
Transaction ID                      : 6
Flags                               : 32
Domain Controller                   : -
Domain Controller MAC               : 0000.0000.0000

Originating Node                    : Building-B
Domain                              : -'s domain
Node                                : Building-B
Ifindex                             : 0
Node Depth                          : 0
Transaction ID                      : 6
Flags                               : 32
Domain Controller                   : -
Domain Controller MAC               : 0000.0000.0000

Downlink Domain Information:

Domain                              : Dept-A's domain
  Domain Controller                 : Dept-A
  Domain Controller MAC             : eccd.6d20.c1d9
  Number of Links                   : 2
  Number of Links Up                : 2
  Number of Links on This Node      : 2
  Links are Blocked                 : 0
  Node Transaction List
    Node                            : Building-B
    Transaction ID                  : 8
    Node                            : Building-A
    Transaction ID                  : 8
  Domain List
    Domain                          : Dept-A's domain
      Node                          : Example-core
      Ifindex                       : 4621
      Transaction ID                : 8
      Flags                         : 1
    Domain                          : Dept-A's domain
      Node                          : Example-core
      Ifindex                       : 4622
      Transaction ID                : 8
      Flags                         : 1
```

Table 48: Sample output from the **show atmf links detail** command (cont.)

```
Domain                              : Dorm-D's domain
  Domain Controller                 : Dorm-D
  Domain Controller MAC             : 0000.cd37.082c
  Number of Links                   : 2
  Number of Links Up                : 2
  Number of Links on This Node      : 2
  Links are Blocked                 : 0
  Node Transaction List
    Node                            : Building-B
    Transaction ID                  : 20
    Node                            : Building-A
    Transaction ID                  : 20
  Domain List
    Domain                          : Dorm-D's domain
      Node                          : Building-A
      Ifindex                       : 0
      Transaction ID                : 20
      Flags                         : 32
    Domain                          : Dorm-D's domain
      Node                          : Building-B
      Ifindex                       : 0
      Transaction ID                : 20
      Flags                         : 32
    Domain                          : Dorm-D's domain
      Node                          : Example-core
      Ifindex                       : 4510
      Transaction ID                : 20
      Flags                         : 1
    Domain                          : Dorm-D's domain
      Node                          : Example-core
      Ifindex                       : 4520
      Transaction ID                : 20
      Flags                         : 1

Domain                              : Example-edge's domain
  Domain Controller                 : Example-edge
  Domain Controller MAC             : 001a.eb93.7aa6
  Number of Links                   : 1
  Number of Links Up                : 1
  Number of Links on This Node      : 0
  Links are Blocked                 : 0
  Node Transaction List
    Node                            : Building-B
    Transaction ID                  : 9
    Node                            : Building-A
    Transaction ID                  : 9
```

Table 48: Sample output from the **show atmf links detail** command (cont.)

```
  Domain List
    Domain                          : Example-edge's domain
      Node                          : Building-A
      Ifindex                       : 0
      Transaction ID                : 9
      Flags                         : 32
    Domain                          : Example-edge's domain
      Node                          : Building-B
      Ifindex                       : 5027
      Transaction ID                : 9
      Flags                         : 1
----------------------------------------------------------------
Up/Downlink Ports Information
----------------------------------------------------------------
Port                                : sa10
Ifindex                             : 4510
Port Status                         : Up
Port State                          : Full
Last event                          : LinkComplete
Adjacent Node                       : Dorm-A
Adjacent Internal ID                : 211
Adjacent Ifindex                    : 4510
Adjacent Board ID                   : 387
Adjacent MAC                        : eccd.6ddf.6cdf
Adjacent Domain Controller          : Dorm-D
Adjacent Domain Controller MAC      : 0000.cd37.082c
Port Forwarding State               : Forwarding
Port BPDU Receive Count             : 95
Port Sequence Number                : 11
Port Adjacent Sequence Number       : 7
Port Last Message Response          : 0
Port                                : po21
Ifindex                             : 4621
Port Status                         : Up
Port State                          : Full
Last event                          : LinkComplete
Adjacent Node                       : Dept-A
Adjacent Internal ID                : 29
Adjacent Ifindex                    : 4621
Adjacent Board ID                   : 340
Adjacent MAC                        : eccd.6d20.c1d9
Adjacent Domain Controller          : Dept-A
Adjacent Domain Controller MAC      : eccd.6d20.c1d9
Port Forwarding State               : Forwarding
Port BPDU Receive Count             : 96
Port Sequence Number                : 8
Port Adjacent Sequence Number       : 9
Port Last Message Response          : 0
Special Link Present                : FALSE
```

Table 49: Parameter definitions from the **show atmf links detail** command output

Parameter	Definition
`Crosslink Ports Information`	Show details of all Crosslink ports on this Node: • Port - Name of the Port or static aggregation (sa<*>). • Ifindex - Interface index for the crosslink port. • VR ID - Virtual router id for the crosslink port. • Port Status - Status of the local port on the Node as UP or DOWN. • Port State - AMF State of the local port. – Init - Link is down. – Hold - Link transitioned to up state, but waiting for hold period to ensure link is stable. – Incompatible - Neighbor rejected the link because of inconsistency in AMF configurations. – OneWay - Link is up and has waited the hold down period and now attempting to link to – another unit in another domain – Full - Link hello packets are sent and received from its neighbor with its own node id. – Shutdown - Link has been shut down by user configuration. Port BPDU Receive Count - The number of AMF protocol PDU's received. • Adjacent Node Name - The name of the adjacent node connected to this node. • Adjacent Ifindex - Adjacent AMF Node connected to this Node. • Adjacent VR ID - Virtual router id of the adjacent node in the domain. • Adjacent MAC - MAC address of the adjacent node in the domain. • Port Last Message Response - Response from the remote neighbor to our AMF last hello packet.
`Link State Entries`	Shows all the link state database entries: • Node.Ifindex - Shows adjacent Node names and Interface index. • Transaction ID - Shows transaction id of the current crosslink transaction. • MAC Address - Shows adjacent Node MAC addresses. • Link State - Shows AMF states of adjacent nodes on the link.
`Domain Nodes Tree`	Shows all the nodes in the domain: • Node - Name of the node in the domain. • Links on Node - Number of crosslinks on a vertex/node. • Link no - Shows adjacent Node names and Interface index. • Forwarding State - Shows state of AMF link Forwarding/Blocking.
`Crosslink Transaction Entries`	Shows all the transaction entries: • Node - Name of the AMF node. • Transaction ID - transaction id of the node. • Uplink Transaction ID - transaction id of the remote node.

Table 49: Parameter definitions from the **show atmf links detail** command output (cont.)

Parameter	Definition
`Uplink Information`	Show all uplink entries. • Waiting for Sync - Flag if uplinks are currently waiting for synchronization. • Transaction ID - Shows transaction id of the local node. • Number of Links - Number of up downlinks in the domain. • Number of Local Uplinks - Number of uplinks on this node to the parent domain. • Originating Node - Node originating the uplink information. • Domain - Name of the parent uplink domain. • Node - Name of the node in the parent domain, that is connected to the current domain. • Ifindex - Interface index of the parent node's link to the current domain. • VR ID - Virtual router id of the parent node's link to the current domain. • Transaction ID - Transaction identifier for the neighbor in crosslink. • Flags - Used in domain messages to exchange the state: ATMF_DOMAIN_FLAG_DOWN = 0 ATMF_DOMAIN_FLAG_UP = 1 ATMF_DOMAIN_FLAG_BLOCK = 2 ATMF_DOMAIN_FLAG_NOT_PRESENT = 4 ATMF_DOMAIN_FLAG_NO_NODE = 8 ATMF_DOMAIN_FLAG_NOT_ACTIVE_PARENT = 16 ATMF_DOMAIN_FLAG_NOT_LINKS = 32 ATMF_DOMAIN_FLAG_NO_CONFIG = 64 • Domain Controller - Domain Controller in the uplink domain • Domain Controller MAC - MAC address of Domain Controller in uplink domain
`Downlink Domain Information`	Shows all the downlink entries: • Domain - Name of the downlink domain. • Domain Controller - Controller of the downlink domain. • Domain Controller MAC - MAC address of the domain controller. • Number of Links - Total number of links to this domain from the Node. • Number of Links Up - Total number of links that are in UP state. • Number of Links on This Node - Number of links terminating on this node. • Links are Blocked - 0 links are not blocked to the domain. 1 All links are blocked to the domain.

Table 49: Parameter definitions from the **show atmf links detail** command output (cont.)

Parameter	Definition
`Node Transaction List`	List of transactions from this downlink domain node. • Node - 0 links are not blocked to the domain. 1 All links are blocked to the domain. • Transaction ID - Transaction id for this node. • Domain List: Shows list of nodes in the current domain and their links to the downlink domain.: • Domain - Domain name of the downlink node. • Node - Name of the node in the current domain. • Ifindex - Interface index for the link from the node to the downlink domain. • Transaction ID - Transaction id of the node in the current domain. • Flags - As mentioned above.
`Up/Downlink Ports Information`	Shows all the configured up and down link ports on this node: • Port - Name of the local port. • Ifindex - Interface index of the local port. • VR ID - Virtual router id for the local port. • Port Status - Shows status of the local port on the Node as UP/DOWN. • Port State - AMF state of the local port. • Adjacent Node - nodename of the adjacent node. • Adjacent Internal ID - Unique node identifier of the remote node. • Adjacent Ifindex - Interface index for the port of adjacent AMF node. • Adjacent Board ID - Product identifier for the adjacent node. • Adjacent VR ID - Virtual router id for the port on adjacent AMF node. • Adjacent MAC - MAC address for the port on adjacent AMF node. • Adjacent Domain Controller - nodename of the Domain controller for Adjacent AMF node. • Adjacent Domain Controller MAC - MAC address of the Domain controller for Adjacent AMF node. • Port Forwarding State - Local port forwarding state Forwarding or Blocking. • Port BPDU Receive Count - count of AMF protocol PDU's received. • Port Sequence Number - hello sequence number, incremented every time the data in the hello packet changes. • Port Adjacent Sequence Number - remote ends sequence number used to check if we need to process this packet or just note it arrived. • Port Last Message Response - response from the remote neighbor to our last hello packet.

For information on filtering and saving command output, see the "Getting Started with AlliedWare Plus" Feature Overview and Configuration Guide.

Related Commands

no debug all

clear atmf links statistics

show atmf

show atmf links guest

Overview This command displays information about guest nodes visible to an AMF device.

Syntax
```
show atmf links guest [interface <interface-range>]
```

Parameter	Description
`interface <interface-range>`	Select a specific range of ports to display information about guest nodes.

Default With no parameters specified this command will display its standard output for all ports with guest nodes connected.

Mode User Exec/Privileged Exec

Usage Use this command to display the guest nodes connected to a single parent node. If you want to see a list of all the guests in the AMF network, use show atmf guests.

Example 1 To display information about AMF guests that are connectible from node1, use the command:

```
node1# show atmf links guest
```

Output Figure 47-20: Example output from **show atmf links guest**

```
node1#sh atmf links guest

Guest Link Information:

DC = Discovery configuration
  S = static D = dynamic

Local    Guest         Model        MAC             IP / IPv6
Port     Class         Type      DC Address         Address
-------------------------------------------------------------
1.0.1    -             other     D  0013.1a1e.4589  192.168.1.2
1.0.2    aastra-phone  other     D  0008.5d10.7635  192.168.1.3
1.0.3    cisco-phone2  other     S  -               192.168.2.1
1.0.4    panasonic...  other     D  0800.239e.f1fe  192.168.1.5
```

Table 47-1: Parameters in the output from **show atmf links guest**

Parameter	Description
`Local Port`	The port on the parent node that connects to the guest.
`Guest Class`	The name of the ATMF guest-class that has been assigned to the guest node by the atmf guest-class command.

Table 47-1: Parameters in the output from **show atmf links guest** (cont.)

Parameter	Description
`Model Type`	The model type of the guest node, as entered by the modeltype command. Can be one of the following: • alliedware • aw+ • tq • other
`DC`	The discovery method as applied by the discovery command. This can be either dynamic (D) or static (S).
`MAC Address`	The MAC address of the guest node.
`IP / IPv6 Address`	The IP address of the guest node.

Related Commands

atmf guest-class

discovery

http-enable

username

modeltype

switchport atmf-guestlink

show atmf backup guest

show atmf links guest detail

Overview This command displays detailed information about guest nodes visible to an AMF device.

Syntax

```
show atmf links guest detail [interface <interface-range>]
```

Parameter	Description
`interface <interface-range>`	Select a specific range of ports to display information about guest nodes.

Default Display details for all ports with guest nodes connected.

Mode User Exec/Privileged Exec

Usage Use this command to display the guest nodes connected to a single parent node. If you want to see a list of all the guests in the AMF network, use show atmf guests detail.

Note that the parameters that are displayed depend on the guest node's model and state.

Example To display detailed information about AMF guests, use the command:

```
node1# show atmf links guest detail
```

Output Figure 47-21: Example output from **show atmf links guest detail**

```
node1#show atmf links guest detail

Detailed Guest Link Information:

Interface : port1.0.13
Link State : Down
Class Name : test
Model Type : Other
Discovery Method : Static
IP Address : 192.168.1.13
Node State : Down

Interface : port1.0.17
Link State : Full
Class Name : access
Model Type : TQ
Discovery Method : Dynamic
IP Address : 192.168.5.8
Username : manager
Node State : Full
Backup Supported : Yes
MAC address : 001a.ebad.ce60
Device Type : AT-TQ3400
Description : node1-1.0.17
Firmware Version : 3.2.1 A02
```

Table 47-2: Parameters in the output from **show atmf links guest detail**

Parameter	Description
`Interface`	The port on the parent node that connects to the guest.
`Link State`	The state of the link to the guest node; one of: • Down: The physical link is down. • Up: The physical link has come up, but it is still during a timeout period that is enforced to allow other links to come up. • Learn: The timeout period described above has elapsed, and the link is now learning information from the AMF guest node. You can see what information it is learning from the "Node State" field below. • Full: The node connected by this link has joined the AMF network. • Fail: The port is physically up but something has prevented the guest node from joining the AMF network.
`Class Name`	The name of the ATMF guest-class that has been assigned to the guest node by the atmf guest-class command.

Table 47-2: Parameters in the output from **show atmf links guest detail** (cont.)

Parameter	Description
`Model Type`	The model type of the guest node, as entered by the modeltype command. Can be one of the following: • alliedware • aw+ • tq • other
`Discovery Method`	The discovery method as applied by the discovery command. This can be either dynamic or static.
`IP Address`	The IP address of the guest node.
`Username`	The user name configured on the guest node.
`Node state`	The state of the guest node; one of: • Down: The initial state when a link to a guest node is first configured. This is also the state if the physical link goes down. • Getting IP: The AMF device is in the process of retrieving the IP address of the guest node. • Getting Mac: The AMF device is in the process of retrieving the MAC address of the guest node. • Getting Info: The AMF device is in the process of retrieving any other available information from the guest (firmware version etc). The information available depends on what device the guest node is. • Full: The AMF device has retrieved all necessary information and the guest node has joined the AMF network. Once this state is reached, the Link State also changes to "Full". • Failure: The physical link is up but the AMF member has failed to retrieve enough information to allow the guest node to join the AMF network.
`Backup Supported`	Whether the guest node supports AMF backup functionality.
`MAC Address`	The MAC address of the guest node.
`Device Type`	Model information for the guest node. This field shows the model information that AMF retrieved from the guest node. In contrast, the Model Type shows what a user entered as the type of device they intended this guest node to be.
`Description`	By default, this is a concatenation of the guest node's parent node and the port to which it is attached. You can change it by configuring a description on the port.

Table 47-2: Parameters in the output from **show atmf links guest detail** (cont.)

Parameter	Description
`Serial Number`	The serial number of the guest node.
`Firmware Name`	The name of the firmware operating on the guest node.
`Firmware Version`	The version of the firmware operating on the guest node.
`HTTP port`	The HTTP port as specified with the http-enable command when defining a guest class. You can set this if the guest node provides an HTTP user interface on a non-standard port (any port other than port 80).

Related Commands

atmf guest-class

discovery

http-enable

username

modeltype

switchport atmf-guestlink

show atmf backup guest

show atmf links statistics

Overview This command displays details of the AMF links configured on the device and also displays statistics about the AMF packet exchanges between the devices.

It is also possible to display the AMF link configuration and packet exchange statistics for a specified interface.

This command can only be run on AMF master and controller nodes

Syntax `show atmf links statistics [interface [<port_number>]]`

Parameter	Description
`interface`	Specifies that the command applies to a specific interface (port) or range of ports. Where both the interface and port number are unspecified, full statistics (not just those relating to ports will be displayed.
<port_number>	Enter the port number for which statistics are required. A port range, a static channel or LACP link can also be specified. Where no port number is specified, statistics will be displayed for all ports on the device.

Mode User Exec

Example 1 To display AMF link statistics for the whole device, use the command:

```
device1# show atmf links statistics
```

Table 48: Sample output from the **show atmf links statistics** command

```
ATMF Statistics:

                                  Receive        Transmit
------------------------------------------------------------------------------
Arealink Hello                      318            327
Crosslink Hello                     164            167
Crosslink Hello Domain              89             92
Crosslink Hello Uplink              86             88
Hello Link                          0              0
Hello Neighbor                      628            630
Hello Stack                         0              0
Hello Gateway                       1257           1257
Database Description                28             28
Database Request                    8              6
Database Update                     66             162
Database Update Bitmap              0              29
Database Acknowledge                144            51
```

Table 48: Sample output from the **show atmf links statistics** command (cont.)

```
Transmit Fails                      0             1
Discards                            0             0
Total ATMF Packets                  2788          2837

ATMF Database Statistics:

Database Entries                    18
Database Full Ages                  0
ATMF Virtual Link Statistics:

Virtual                             Receive                   Transmit
link                  Receive       Dropped      Transmit     Dropped
-------------------------------------------------------------------------------
vlink2000             393           0            417          0

ATMF Packet Discards:
Type0   0           : Gateway hello msg received from unexpected neighbor
Type1   0           : Stack hello msg received from unexpected neighbor
Type2   0           : Discard TX update bitmap packet - bad checksum
Type3   0           : Discard TX update packet - neighbor not in correct state
Type4   0           : Discard update packet - bad checksum or type
Type5   0           : Discard update packet - neighbor not in correct state
Type6   0           : Discard update bitmap packet - bad checksum or type
Type7   0           : Incarnation is not possible with the data received
Type8   0           : Discard crosslink hello received - not correct state
Type9   0           : Discard crosslink domain hello received on non crosslink
Type10  0           : Discard crosslink domain hello - not in correct state
Type11  0           : Crosslink uplink hello received on non crosslink port
Type12  0           : Discard crosslink uplink hello - not in correct state
Type13  0           : Wrong network-name for this ATMF
Type14  0           : Packet received on port is too long
Type15  0           : Bad protocol version, received on port
Type16  0           : Bad packet checksum calculation
Type17  0           : Bad authentication type
Type18  0           : Bad simple password
Type19  0           : Unsupported authentication type
Type20  0           : Discard packet - unknown neighbor
Type21  0           : Discard packet - port is shutdown
Type22  0           : Non broadcast hello msg received from unexpected neighbor
Type23  0           : Arealink hello msg received on non arealink port
Type24  0           : Discard arealink hello packet - not in correct state
Type25  0           : Discard arealink hello packet - failed basic processing
Type26  0           : Discard unicast packet - MAC address does not match node
Type27  0           : AMF Master license node limit exceeded
```

Example 2 To display the AMF links statistics on interface port1.0.5, use the command:

```
device1# show atmf links statistics interface
port1.0.5
```

Figure 47-22: Sample output from the **show atmf links statistics** command for interface 1.0.5

```
device1# show atmf links statistics interface port1.0.5

ATMF Port Statistics:

Transmit                                        Receive

port1.0.5  Crosslink Hello                      231             232
port1.0.5  Crosslink Hello Domain               116             116
port1.0.5  Crosslink Hello Uplink               116             115
port1.0.5  Hello Link                           0               0
port1.0.5  Arealink Hello                       0               0
```

Figure 47-23: Parameter definitions from the **show atmf links statistics** command output

Parameter	Definition
Receive	Shows a count of AMF protocol packets received per message type.
Transmit	Shows the number of AMF protocol packets transmitted per message type.
Database Entries	Shows the number of AMF elements existing in the distributed database.
Database Full Ages	Shows the number of times the entries aged in the database.
ATMF Packet Discards	Shows the number of discarded packets of each type.

For information on filtering and saving command output, see the "Getting Started with AlliedWare Plus" Feature Overview and Configuration Guide.

Related Commands

no debug all

clear atmf links statistics

show atmf

show atmf nodes

Overview This command displays nodes currently configured within the AMF network.

Note that the output also tells you whether or not node map exchange is active. Node map exchange improves the tracking of nodes joining and leaving an AMF network. This improves the efficiency of AMF networks. Node map exchange is only available if every node in your AMF network is running version 5.4.6-2.1 or later. We recommend running the latest version on all nodes in your network, so you receive the advantages of node map exchange and other improvements.

Syntax

```
show atmf nodes [guest|all]
```

Parameter	Description
`guest`	Display only guest nodes in the AMF network.
`all`	Display all nodes in the AMF network, including guest nodes.

Mode Privileged Exec

Usage You can use this command to display one of three sets of nodes:

- all nodes except guest nodes, by specifying **show atmf nodes**
- all nodes including guest nodes, by specifying **show atmf nodes all**
- only guest nodes, by specifying **show atmf nodes guest**

Examples To display AMF information for all nodes except guest nodes, use the command:

```
node1# show atmf nodes
```

Table 47-1: Sample output from **show atmf nodes**

```
node1#show atmf nodes guest

Node Information:

  * = Local device

 SC = Switch Configuration:
  C = Chassis    S = Stackable    N = Standalone

  Node                 Device             ATMF          Parent               Node
  Name                 Type               Master  SC    Domain               Depth
-------------------------------------------------------------------------------
* M1                   x510-28GTX           Y     S     none                   0
  N3                   x230-18GP            N     N     M1                     1
  N1                   AR4050S              N     N     M1                     1

 Node map exchange is active
 Current ATMF node count 3
```

To display AMF information for all nodes, including guest nodes, use the command:

```
node1# show atmf nodes all
```

Table 48: Sample output from **show atmf nodes all**. In this example, not all nodes support node map exchange, as shown by the message at the end

```
node1#show atmf nodes all

 Node and Guest Information:

  * = Local device

 SC = Switch Configuration:
  C = Chassis   S = Stackable   N = Standalone G = Guest

  Node/Guest           Device             ATMF         Parent              Node
  Name                 Type               Master  SC   Domain              Depth
-------------------------------------------------------------------------------
* M1                   x510-28GTX           Y     S    none                  0
  N3                   x230-18GP            N     N    M1                    1
  N1                   AR4050S              N     N    M1                    1
  N3-1.0.24            AT-TQ4600            N     G    N3                    -

Node map exchange is inactive
Firmware on some nodes does not support node map exchange, eg AR4050S
Current ATMF node count 4 (guests 1)
```

To display AMF information for guest nodes only, use the command:

```
node1# show atmf nodes guest
```

Table 47-1: Sample output from **show atmf nodes guest**

```
node1#show atmf nodes guest

Guest Information:
Device        MAC                                          IP/IPv6
Name          Address         Parent            Port       Address
-------------------------------------------------------------------------------
aastra-...    0008.5d10.7635  Node-1            1.0.2      192.168.4.7
poe-1.0.1     0013.1a1e.4589  Node-1            1.0.1      192.168.4.6
ip-camera     0800.239e.f1fe  Node-1            1.0.4      192.168.4.8
tq4600        eccd.6df2.da60  Node-1            1.0.5      192.168.4.50
```

Related Commands

show atmf

show atmf area nodes

discovery

http-enable

show atmf backup guest

show atmf provision nodes

Overview This command displays information about each provisioned node with details about date and time of creation, boot and configuration files available in the backup, and license files present in the provisioned backup. This includes nodes that have joined the network but are yet to run their first backup.

This command can only be run on AMF master and controller nodes.

Syntax

```
show atmf provision nodes
```

Mode Privileged Exec

Usage This command will only work if provisioned nodes have already been set up. Otherwise, an error message is shown when the command is run.

Example To show the details of all the provisioned nodes in the backup use the command:

```
NodeName# show atmf provision nodes
```

Figure 47-24: Sample output from the **show atmf provision nodes** command

```
device1#show atmf provision nodes

ATMF Provisioned Node Information:

Backup Media .............: SD (Total 3827.0MB, Free 3481.1MB)

Node Name                 : device2
Date& Time                : 06-Oct-2016 & 23:25:44
Provision Path            : card:/atmf/provision_nodes

Boot configuration :
Current boot image        : x510-5.4.6-1.4.rel (file exists)
Backup  boot image        : x510-5.4.6-1.3.rel (file exists)
Default boot config       : flash:/default.cfg (file exists)
Current boot config       : flash:/abc.cfg (file exists)
Backup  boot config       : flash:/xyz.cfg (file exists)

Software Licenses :
Repository file           : ./.configs/.sw_v2.lic
                          : ./.configs/.swfeature.lic
Certificate file          : card:/atmf/nodes/awplus1/flash/.atmf-lic-cert
```

Related commands

atmf provision node create

atmf provision node clone

atmf provision node configure boot config

atmf provision node configure boot system

show atmf backup

show atmf secure-mode

Overview Use this command to display an overview of the secure mode status of an AMF network.

Syntax
```
show atmf secure-mode
```

Mode Privileged Exec

Example To display an overview of AMF secure mode on an AMF master or member node, use the command:

```
awplus# show atmf secure-mode
```

Output Figure 47-25: Example output from **show atmf secure-mode** on an AMF master

```
ATMF Secure Mode:

Secure Mode Status                : Enabled
Certificate Expiry                : 180 Days
Certificates Total                : 8
Certificates Revoked              : 0
Certificates Rejected             : 0
Certificates Active               : 8

Provisional Authorization         : 0
Pending Requests                  : 0

Trusted Master                    : master_1
Trusted Master                    : master_2

Key Fingerprint:
  48:37:d9:a0:37:32:22:9b:5c:22:da:a2:62:49:a7:e5:a9:bc:12:88
```

Figure 47-26: Example output from **show atmf secure-mode** on an AMF node

```
ATMF Secure Mode:

Secure Mode Status                : Enabled
Trusted Master                    : master_1
Trusted Master                    : master_2

Key Fingerprint:
  93:f0:52:a9:74:8f:ae:ea:5b:e2:ee:62:cb:6b:21:22:5a:08:db:98
```

Table 47-2: Parameters in the output from **show atmf secure-mode**

Parameter	Description
`Secure Mode Status`	Shows the status of secure mode, `Enabled` or `Disabled`.
`Certificate Expiry`	Certificate expiry time. Set with atmf secure-mode certificate expiry
`Certificates Total`	Total number of certificates.
`Certificates Revoked`	Certificates that have been revoked by the AMF master.
`Certificates Rejected`	Certificates that have been rejected by the AMF master.
`Certificates Active`	Certificates that are currently active.
`Provisional Authorization`	Number of nodes with provisional authorization. For more information use the show atmf authorization **provisional** command.
`Pending Requests`	Number of nodes waiting for authorization on the AMF master. For more information use the show atmf authorization **pending** command.
`Trusted Master`	List of trusted masters in the AMF area.
`Key Fingerprint`	The AMF node's key fingerprint.

Related Commands

atmf authorize

atmf secure-mode

atmf secure-mode certificate expiry

show atmf authorization

show atmf secure-mode audit link

Command changes

Version 5.4.7-0.3: command added

show atmf secure-mode audit

Overview Use this command to detect security vulnerabilities on a node.

Syntax

```
show atmf secure-mode audit
```

Mode Privileged Exec

Example To display AMF secure mode link audits for a node, use the command

```
awplus# show atmf secure-mode audit
```

Output Figure 47-27: Example output from **show atmf secure-mode audit**

```
ATMF Secure Mode Audit:

Warning   : The default username and password is enabled.
Good      : SNMP V1 or V2 is disabled.
Warning   : Telnet server is enabled.
Good      : ATMF is enabled. Secure-Mode is on.
Good      : ATMF Topology-GUI is disabled. No trustpoints configured.

ATMF Secure Mode Log Events:

------------------------------------------------------------------------
2017 Feb 2 00:59:25 user.notice node1 ATMF[848]: Sec_Audit - ATMF Secure
Mode is enabled.
2017 Feb 2 01:30:00 user.notice node1 ATMF[848]: Sec_Audit - Established
secure connection to area_1_node_1 on interface vlink1.
```

Table 47-3: Parameters in the output from **show atmf secure-mode audit link**

Parameter	Description
`ATMF Secure Mode Audit`	A list of security recommendations to secure the AMF network. Items prefaced with `Warning` need to be fixed. In the sample above the default username and password, and telnet, should be disabled.
`ATMF Secure Mode Log Events`	A list of recorded secure mode log events.

Related Commands show atmf secure-mode

Command changes Version 5.4.7-0.3: command added

show atmf secure-mode audit link

Overview Use this command to detect security vulnerabilities by identifying devices that are connected to a secure mode node that are not in secure mode or are not authorized.

Syntax
```
show atmf secure-mode audit link
```

Mode Privileged Exec

Example To display AMF secure mode link audits for a node, use the command

```
awplus# show atmf secure-mode audit link
```

Output Figure 47-28: Example output from **show atmf secure-mode audit link**

```
ATMF Secure Mode Audit Link:

 * ATMF links connected to devices which are not authorized
   or are not in secure-mode.

Port       Link Type  Discovered           Node/Area Name
-----------------------------------------------------------
vlink1     Downlink   16/02/2017 09:28:22  Member3
```

Table 47-4: Parameters in the output from **show atmf secure-mode audit link**

Parameter	Description
Port	Port name on local device.
Link Type	Link type.
Discovered	Date discovered
Node/Area Name	Node or area name of remote device.

Related Commands show atmf

show atmf secure-mode

Command changes Version 5.4.7-0.3: command added

show atmf secure-mode certificates

Overview Use this command to display the certificate status details when secure mode is enabled on an AMF network.

Syntax
```
show atmf secure-mode certificates [detail] [area <area-name>]
[node <node-name>]
```

Parameter	Description
`detail`	Display detailed certificate information.
`area`	Specify an AMF area.
<area-name>	The AMF area you want to see the certificate information for.
`node`	Specify an AMF node.
<node-name>	The AMF node you want to see information for.

Mode Privileged Exec

Example To display AMF secure mode certificates on a master or member node, use the command:

```
awplus# show atmf secure-mode certificates
```

To display detailed information about AMF secure mode certificates for a node named “area_2_node_1” in an area named “area-2”, use the command:

```
awplus# show atmf secure-mode certificates detail area area-2
node area_2_node_1
```

Output Figure 47-29: Example output from **show atmf secure-mode certificates**

```
  Area-1 Certificates:
  Node Name             Signer                Expires               Status
------------------------------------------------------------------------------
  area_1_node_1         master_1              11 Mar 2017
                        master_2              4 Mar 2017            Active
  area_1_node_2         master_1              11 Mar 2017
                        master_2              4 Mar 2017            Revoked

  Area-2 Certificates:
  Node Name             Signer                Expires               Status
------------------------------------------------------------------------------
  area_2_node_1         master_1              18 Mar 2017           Active
  area_2_node_2         master_1              18 Mar 2017           Rejected
```

Table 47-5: Parameters in the output from **show atmf secure-mode certificates**

Parameter	Description
`Node Name`	Name of AMF node the certificate was issued to.
`Signer`	Name of AMF master that issued the certificate.
`Expires`	Certificate expiry date.
`Status`	The status column will display `Active` before a member node is trusted, and can be accessed using AMF commands. Valid statuses are `Active`, `Revoked`, and `Rejected`.

Output Figure 47-30: Example output from **show atmf secure-mode certificates detail area area-2 node area_2_node_1**

```
 Certificates Detail:

-------------------------------------------------------------------------------
area_2_node_1 (area:area-2)
  MAC Address     : 0000.cd37.0003
  Status          : Active
  Serial Number   : A24SC8001
  Product         : x510-28GTX
  Key Fingerprint : cd:b4:c9:cd:7b:87:6a:30:98:25:d7:3c:89:8e:cb:74:e8:91:56:9d
  Flags           : 00000011
  Signer          : master_1
  Expiry Date     : 18 Mar 2017 21:17:42
```

Table 47-6: Parameters in the output from **show atmf secure-mode certificates detail**

Parameter	Description
`MAC Address`	MAC address of AMF node.
`Status`	The device status will show `Active` if a member node is trusted, and can be accessed using AMF commands. Valid statuses are `Active`, `Revoked`, and `Rejected`.
`Serial Number`	Device serial number.
`Product`	Device product type.
`Key Fingerprint`	AMF node key fingerprint.
`Flags`	Internal AMF information.
`Signer`	Name of AMF master that issued the certificate.
`Expiry Date`	Certificate expiry date.

Related Commands

atmf authorize

atmf secure-mode

atmf secure-mode certificate expire

atmf secure-mode certificate renew

clear atmf secure-mode certificates

show atmf secure-mode sa

Command changes

Version 5.4.7-0.3: command added

show atmf secure-mode sa

Overview Use this command to display the security associations on the network. This is the list of links and neighbors that are trusted.

Syntax

```
show atmf secure-mode sa [detail] [link|neighbor|broadcast]
```

Parameter	Description
`detail`	Display detailed security association information.
`link`	Display security associations for type links.
`neighbor`	Display security associations for type neighbors.
`broadcast`	Display security associations for type broadcast.

Mode Privileged Exec

Example To display an overview of AMF secure mode security associations on a master or member node, use the command:

```
awplus# show atmf secure-mode sa
```

To display a detailed overview of AMF secure mode neighbor security associations on a master or member node, use the command:

```
awplus# show atmf secure-mode sa detail neighbor
```

Output Figure 47-31: Example output from **show atmf secure-mode sa**

```
  ATMF Security Associations:

  Type                        State           ID            Details
-------------------------------------------------------------------------------
  Neighbor Node               Complete        175           master_1
  Broadcast                   Complete        4095
  CrossLink                   Complete        4501          sa1
  AreaLink                    Cert Exchg      4511          sa11
  Link                        Complete        6009          port1.2.9
  AreaLink                    CA Exchg Init   6013          port1.2.13
  AreaLink                    Cert Exchg      13001         port1.9.1
  Link                        CA Exchg Init   16779521      vlink3
  Neighbor Gateway            Complete        83            master_2
  Neighbor Gateway            Complete        175           master_1
  Neighbor Cntl-Master        Complete        83            master_2
  Neighbor Cntl-Master        Complete        175           master_1
```

Figure 47-32: Example output from **show atmf secure-mode sa detail neighbor**

```
 Security Associations Detail:

-------------------------------------------------------------
Id                      : 175 (af)
  Type                  : Neighbor Node
  State                 : Complete
  Remote MAC Address    : eccd.6d82.6c16
  Flags                 : 000003c0

Id                      : 83 (40000053)
  Type                  : Neighbor Gateway
  State                 : Complete
  Remote MAC Address    : 001a.eb54.e53b
  Flags                 : 000003c0

Id                      : 175 (400000af)
 Type                   : Neighbor Gateway
 State                  : Complete
 Remote MAC Address     : eccd.6d82.6c16
 Flags                  : 000003c0

Id                      : 83 (80000053)
 Type                   : Neighbor Cntl-Master
 State                  : Complete
 Remote MAC Address     : 001a.eb54.e53b
 Flags                  : 000003c0

Id                      : 175 (800000af)
 Type                   : Neighbor Cntl-Master
 State                  : Complete
 Remote MAC Address     : eccd.6d82.6c16
 Flags                  : 000003c0

Id                      : 321 (80000141)
 Type                   : Neighbor Cntl-Master
 State                  : Complete
 Remote MAC Address     : 0000.f427.93da
 Flags                  : 000003c0
```

Table 47-7: Parameters in the output from **show atmf secure-mode sa**

Parameter	Description
`Type`	Security Association (SA) types: • Link - SA for link • CrossLink - SA for crosslink • AreaLink - SA for area link • Neighbor Node - SA for node neighbor relationship • Neighbor Gateway - SA for gateway neighbor relationship • Neighbor Cntl-Master - SA for controller/master neighbor relationship • Broadcast - SA for working-set broadcast requests
`State`	Current state of the Security Association. The state must be `Complete` before a member node is trusted, and can be accessed using AMF commands. • CA Exchg Init - SA is ready to begin the SA exchange process • CA Exchg - SA is currently exchanging CAs • Cert Exchg - SA is currently exchanging certificates • Key Exchg - SA is currently exchanging ephemeral keys • Complete - SA exchange has completed
`ID`	Security Association ID. • For Neighbor types this is the remote node ID. • For Link types this is the local ifindex. • For Broadcast type this is always 4095.
`Details`	Human readable translation of ID. • For Neighbor types this is the node name • For Link types this is the interface name
`Remote MAC Address`	MAC address of the remote partner of the security association.
`Flags`	Internal AMF information.

Related Commands

atmf secure-mode

show atmf secure-mode

show atmf secure-mode certificates

Command changes

Version 5.4.7-0.3: command added

show atmf secure-mode statistics

Overview Use this command to display AMF secure mode statistics. These statistics are from when AMF secure mode was first enabled or the statistics were cleared with the clear atmf secure-mode statistics command.

Syntax
```
show atmf secure-mode statistics
```

Mode Privileged Exec

Example To display AMF secure mode statistics on a master or member node, use the command:

```
awplus# show atmf secure-mode statistics
```

Output Figure 47-33: Example output from **show atmf secure-mode statistics** on an AMF master.

```
ATMF Secure Mode Statistics:

Certificates:
New ............. 7              Expired .......... 0
Updated ......... 7              Deleted .......... 0
Revoked ......... 1              Renewed .......... 2
Rejected ........ 1              Re-authorized .... 1
Authorized ...... 0


Local Certificates:
Valid ........... 4              Invalid  ......... 0
Certificates Validation:
Request Valid ..................................... 2
Request Invalid ................................... 0
Common Valid ...................................... 13
Common Invalid .................................... 0
Issuer Valid ...................................... 14
Issuer Invalid .................................... 0
Signature Verified ................................ 29
Signature Invalid ................................. 0
Signature Purpose Invalid ......................... 0

Signatures Signed ................................. 12
Master Certificates:
Re-issued ......................................... 3
Downgraded to member .............................. 0

Public key change ................................. 2
Invalid SA public key ............................. 0
```

Output Figure 47-34: Example output from **show atmf secure-mode statistics** on an AMF node.

```
ATMF Secure Mode Statistics:


Local Certificates:
Valid ........... 3              Invalid  ......... 0


Certificates Validation:
Request Valid ..................................... 0
Request Invalid ................................... 0
Common Valid ...................................... 0
Common Invalid .................................... 0
Issuer Valid ...................................... 12
Issuer Invalid .................................... 0
Signature Verified ................................ 12
Signature Invalid ................................. 3
Signature Purpose Invalid ......................... 0

Signatures Signed ................................. 0

Master Certificates:
Re-issued ......................................... 0
Downgraded to member .............................. 0

Public key change ................................. 2
Invalid SA public key ............................. 0
```

Related Commands

atmf authorize

atmf secure-mode

atmf secure-mode certificate renew

clear atmf secure-mode statistics

show atmf secure-mode

Command changes Version 5.4.7-0.3: command added

show atmf tech

Overview This command collects and displays all the AMF command output. The command can thus be used to display a complete picture of an AMF network.

Syntax

```
show atmf tech
```

Mode Privileged Exec

Example To display output for all AMF commands, use the command:

```
NodeName# show atmf tech
```

Table 48: Sample output from the **show atmf tech** command.

```
node1#show atmf tech
ATMF Summary Information:

ATMF Status            : Enabled
Network Name           : ATMF_NET
Node Name              : node1
Role                   : Master
Current ATMF Nodes     : 8

ATMF Technical information:

Network Name                        : ATMF_NET
Domain                              : node1's domain
Node Depth                          : 0
Domain Flags                        : 0
Authentication Type                 : 0
MAC Address                         : 0014.2299.137d
Board ID                            : 287
Domain State                        : DomainController
Domain Controller                   : node1
Backup Domain Controller            : node2
Domain controller MAC               : 0014.2299.137d
Parent Domain                       : -
Parent Domain Controller            : -
Parent Domain Controller MAC        : 0000.0000.0000
Number of Domain Events             : 0
Crosslink Ports Blocking            : 0
Uplink Ports Waiting on Sync        : 0
```

Table 48: Sample output from the **show atmf tech** command. (cont.)

```
Crosslink Sequence Number          : 7
Domains Sequence Number            : 28
Uplink Sequence Number             : 2
Number of Crosslink Ports          : 1
Number of Domain Nodes             : 2
Number of Neighbors                : 5
Number of Non Broadcast Neighbors  : 3
Number of Link State Entries       : 1
Number of Up Uplinks               : 0
Number of Up Uplinks on This Node  : 0
DBE Checksum                       : 84fc6
Number of DBE Entries              : 0
...
```

Table 49: Parameter definitions from the **show atmf tech** command

Parameter	Definition
ATMF Status	Shows status of AMF feature on the Node as Enabled/Disabled.
Network Name	The name of the AMF network to which this node belongs.
Node Name	The name assigned to the node within the AMF network.
Role	The role configured on the device within the AMF - either master or member.
Current ATMF Nodes	A count of the AMF nodes in the AMF network.
Node Address	The identity of a node (in the format name.atmf) that enables its access it from a remote location.
Node ID	A unique identifier assigned to an AMF node.
Node Depth	The number of nodes in the path from this node to the core domain.
Domain State	A node's state within an AMF Domain - either controller or backup.
Recovery State	The AMF node recovery status. Indicates whether a node recovery is in progress on this device - either Auto, Manual, or None.
Management VLAN	The VLAN created for traffic between nodes of different domains (up/down links). VLAN ID - In this example VLAN 4092 is configured as the Management VLAN. Management Subnet - the Network prefix for the subnet. Management IP Address - the IP address allocated for this traffic. Management Mask - the Netmask used to create a subnet for this traffic 255.255.128.0 (= prefix /17)

Table 49: Parameter definitions from the **show atmf tech** command (cont.)

Parameter	Definition
`Domain VLAN`	The VLAN assigned for traffic between Nodes of same domain (crosslink). VLAN ID - In this example VLAN 4091 is configured as the domain VLAN. Domain Subnet - the Subnet address used for this traffic. Domain IP Address - the IP address allocated for this traffic. Domain Mask - the Netmask used to create a subnet for this traffic 255.255.128.0 (= prefix /17)
`Device Type`	Shows the Product Series Name.
`ATMF Master`	Indicates the node's membership of the core domain (membership is indicated by Y)
`SC`	Shows switch configuration: • C - Chassis (such as SBx8100 series) • S - Stackable (VCS) • N - Standalone
`Parent`	A node that is connected to the present node's uplink, i.e. one layer higher in the hierarchy.
`Node Depth`	Shows the number of nodes in path from the current node to the Core domain.

NOTE: *The **show atmf tech** command can produce very large output. For this reason only the most significant terms are defined in this table.*

show atmf virtual-links

Overview This command displays a summary of all virtual links (L2TP tunnels) currently in the running configuration.

Syntax

```
show atmf virtual-links [macaddr]
```

Parameter	Description
macaddr	Display the virtual AMF links' MAC addresses.

Mode Privileged Exec

Example 1 To display AMF virtual links, use the command:

```
node_1# show atmf virtual-links
```

Table 47-1: Example output from **show atmf virtual-links**

```
ATMF Link Remote Information:

Local     Local           Local   Remote          Remote  Retries  State
Port      Ip              Id      Ip              Id
-------------------------------------------------------------------------
vlink1    192.0.2.33      1       192.168.1.1     2       0        Down
vlink2    192.0.2.65      2       192.168.2.0     3       0        Up
```

In the above example, a centrally located switch has the IP address space 192.0.2.x/24. It has two VLANs assigned the subnets 192.0.2.33 and 192.0.2.65 using the prefix /27. Each subnet connects to a virtual link. The first link has the IP address 192.168.1.1 and has a Local ID of 1. The second has the IP address 192.168.2.1 and has the Local ID of 2.

Example 2 To display AMF virtual links' MAC address information, use the command:

```
node_1# show atmf virtual-links macaddr
```

Table 47-2: Example output from **show atmf virtual-links macaddr**

```
ATMF Link Remote Information:

ATMF Management Bridge Information:

Bridge: br-atmfmgmt

port no mac addr                is local?       ageing timer
  1     00:00:cd:27:c2:07       yes               0.00
  2     8e:c7:ae:81:7e:68       yes               0.00
  2     00:00:cd:28:bf:e7       no                0.01
```

Table 47-3: Parameters in the output from **show atmf virtual-links**

Parameter	Definition
`vlink1`	The tunnel named vlink1, equivalent to an L2TP tunnel.
`Local ID`	The local ID of the virtual link. This matches the vlink<number>
`State`	The operational state of the vlink (either Up or Down). This state is always displayed once a vlink has been created.
`mac addr`	AMF virtual links terminate on an internal soft bridge. The "show atmf virtual-links macaddress" command displays MAC Address information.
`is local?`	Indicates whether the MAC displayed is for a local or a remote device.
`ageing timer`	Indicates the current aging state for each MAC address.

Related Commands atmf virtual-link

show atmf working-set

Overview This command displays the nodes that form the current AMF working-set.

Syntax

```
show atmf working-set
```

Mode Privileged Exec

Example To show current members of the working-set, use the command:

```
ATMF_NETWORK[6]# show atmf working-set
```

Table 48: Sample output from the **show atmf working-set** command.

```
ATMF Working Set Nodes:

node1, node2, node3, node4, node5, node6

Working set contains 6 nodes
```

Related Commands

atmf working-set

show atmf

show atmf group

show debugging atmf

Overview This command shows the debugging modes status for AMF.

Syntax

```
show debugging atmf
```

Mode User Exec and Global Configuration

Example To display the AMF debugging status, use the command:

```
node_1# show debugging atmf
```

Figure 47-35: Sample output from the **show debugging atmf** command.

Table 47-1:

```
node1# show debugging atmf
ATMF debugging status:
ATMF arealink debugging is on
ATMF link debugging is on
ATMF crosslink debugging is on
ATMF database debugging is on
ATMF neighbor debugging is on
ATMF packet debugging is on
ATMF error debugging is on
```

Related Commands debug atmf packet

show debugging atmf packet

Overview This command shows details of AMF Packet debug command settings.

Syntax

```
show debugging atmf packet
```

Mode User Exec and Global Configuration

Example To display the AMF packet debugging status, use the command:

```
node_1# show debug atmf packet
```

Figure 47-36: Sample output from the **show debugging atmf packet** command.

Table 47-2:

```
ATMF packet debugging is on
=== ATMF Packet Debugging Parameters===
Node Name: x908
Port name: port1.1.1
Limit: 500 packets
Direction: TX
Info Level: Level 2
Packet Type Bitmap:
2. Crosslink Hello BPDU pkt with downlink domain info
3. Crosslink Hello BPDU pkt with uplink info
4. Down and up link Hello BPDU pkts
6. Stack hello unicast pkts
8. DBE request
9. DBE update
10. DBE bitmap update
```

Related Commands

debug atmf

debug atmf packet

show running-config atmf

Overview This command displays the running system information that is specific to AMF.

Syntax

```
show running-config atmf
```

Mode User Exec and Global Configuration

Example To display the current configuration of AMF, use the following commands:

```
node_1# show running-config atmf
```

For information on filtering and saving command output, see the "Getting Started with AlliedWare Plus" Feature Overview and Configuration Guide.

Related Commands show running-config

no debug all

state

Overview This command sets the running state of an AMF container on a Virtual AMF Appliance (VAA).

An AMF container is an isolated instance of AlliedWare Plus with its own network interfaces, configuration, and file system. The features available inside an AMF container are a sub-set of the features available on the host VAA. These features enable the AMF container to function as a uniquely identifiable AMF master and allows for multiple tenants (up to 60) to run on a single VAA host. See the AMF Feature Overview and Configuration Guide for more information on running multiple tenants on a single VAA host.

Syntax

```
state {enable|disable}
```

Parameter	Description
`disable`	Stop the AMF container. The container's state changes to `stopped`.
`enable`	Start the AMF container. The container's state changes to `running`.

Default By default, **state** is disabled.

Mode AMF Container Configuration

Usage The first time the **state enable** command is executed on a container it assigns the container to an area and configures it as an AMF master. This is achieved by automatically adding the following configuration to the AMF container:

```
atmf network-name <AMF network-name>
atmf master
atmf area <container area-name> <container area-id> local
atmf area <container area-name> password <container area-password>
atmf area <host area-name> <host area-id>

interface eth0
 atmf-arealink remote-area <host area-name> vlan 4094
```

For this reason the **state enable** command should be run after the container has been created with the atmf container command and an area-link configured with the area-link command.

Once the start-up configuration has been saved from within the AMF container, all further configuration changes need to be made manually.

Example

To start the AMF container “vac-wlg-1” use the commands:

```
awplus# configure terminal
awplus(config)# atmf container vac-wlg-1
awplus(config-atmf-container)# state enable
```

To stop the AMF container “vac-wlg-1” use the commands:

```
awplus# configure terminal
awplus(config)# atmf container vac-wlg-1
awplus(config-atmf-container)# state disable
```

Related Commands

atmf container

show atmf container

Command changes

Version 5.4.7-0.1: command added

switchport atmf-agentlink

Overview Use this command to configure a link between this device and an x600 Series switch, in order to integrate the x600 Series switch into your AMF network. The x600 Series switch is called an "AMF agent", and the link between the x600 and this device is called an "agent link".

The x600 Series switch must be running version 5.4.2-3.16 or later.

Use the **no** variant of this command to remove the agent link. If the x600 Series switch is still connected to the switch port, it will no longer be part of the AMF network.

Syntax

```
switchport atmf-agentlink
no switchport atmf-agentlink
```

Default By default, no agent links exist and x600 Series switches are not visible to AMF networks.

Mode Interface mode for a switch port. Note that the link between the x600 and the AMF network must be a single link, not an aggregated link.

Usage The x600 Series switch provides the following information to the AMF node that it is connected to:

- The MAC address
- The IPv4 address
- The IPv6 address
- The name/type of the device (Allied Telesis x600)
- The name of the current firmware
- The version of the current firmware
- The configuration name

AMF guestnode also makes most of this information available from x600 Series switches, but requires configuration with DHCP and/or LLDP. AMF agent is simpler; as soon the x600 is connected to an appropriately configured port of an AMF node, it is immediately integrated into the AMF network.

To see information about the x600 Series switch, use the **show atmf links guest detail** command.

Example To configure port 1.0.1 as an agent link, use the commands:

```
awplus# configure terminal
awplus(config)# interface port1.0.1
awplus(config-if)# switchport atmf-agentlink
```

Related Commands show atmf links guest

switchport atmf-arealink remote-area

Overview This command enables you to configure a port or aggregator to be an AMF arealink. AMF arealinks are designed to operate between two nodes in different areas in an AMF network.

Use the **no** variant of this command to remove any AMF-arealink that may exist for the selected port or aggregated link.

This command is only available on AMF controllers and master nodes.

Syntax

```
switchport atmf-arealink remote-area <area-name> vlan <2-4094>
no switchport atmf-arealink
```

Parameter	Description
<area-name>	The name of the remote area that the port is connecting to.
<2-4094>	The VLAN ID for the link. This VLAN cannot be used for any other purpose, and the same VLAN ID must be used at each end of the link.

Default By default, no arealinks are configured

Mode Interface Configuration for a switchport, a static aggregator or a dynamic channel group.

Usage Run this command on the port or aggregator at both ends of the link.

Each area must have the area-name configured, and the same area password must exist on both ends of the link.

Running this command will automatically place the port or static aggregator into trunk mode (i.e. switchport mode trunk) and will synchronize the area information stored on the two nodes.

You can configure multiple arealinks between two area nodes, but only one arealink at any time will be in use. All other arealinks will block information, to prevent network storms.

Example To make a switchport 1.2.1 an arealink to the *Auckland* area on VLAN 6, use the following commands

```
controller-1# configure terminal
controller-1(config)# interface port1.2.1
controller-1(config-if)# switchport atmf-arealink remote-area
Auckland vlan 6
```

Related Commands

atmf area

atmf area password

atmf virtual-link

show atmf links

switchport atmf-crosslink

Overview This command configures the selected port, statically aggregated link or dynamic channel group (LACP) to be an AMF crosslink. Running this command will automatically place the port or aggregator into trunk mode (i.e. **switchport mode trunk**).

The connection between two AMF masters must utilize a crosslink. Crosslinks are used to carry the AMF control information between master nodes. Multiple crosslinks can be configured between two master nodes, but only one crosslink can be active at any particular time. All other crosslinks between masters will be placed in the blocking state, in order to prevent broadcast storms.

Use the **no** variant of this command to remove any crosslink that may exist for the selected port or aggregated link.

Syntax

```
switchport atmf-crosslink
no switchport atmf-crosslink
```

Mode Interface Configuration for a switchport, a static aggregator or a dynamic channel group.

Usage Crosslinks can be used anywhere within an AMF network. They have the effect of separating the AMF network into separate domains.

Where this command is used, it is also good practice to use the switchport trunk native vlan command with the parameter **none** selected. This is to prevent a network storm on a topology of ring connected devices.

Example 1 To make a switchport 1.0.1 an AMF crosslink, use the following commands:

```
Node_1# configure terminal
Node_1(config)# interface port1.0.1
Node_1(config-if)# switchport atmf-crosslink
```

Example 2 This example is shown twice. Example 2A is the most basic command sequence. Example 2B is a good practice equivalent that avoids problems such as broadcast storms that can otherwise occur.

Example 2A To make static aggregator sa1 an AMF crosslink, use the following commands:

```
Node_1# configure terminal
Node_1(config)# interface sa1
Node_1(config-if)# switchport atmf-crosslink
```

Example 2B To make static aggregator sa1 an AMF crosslink, use the following commands for good practice:

```
Node_1# configure terminal
Node_1(config)# interface sa1
Node_1(config-if)# switchport atmf-crosslink
Node_1(config-if)# switchport trunk allowed vlan add 2
Node_1(config-if)# switchport trunk native vlan none
```

In this example VLAN 2 is assigned to the static aggregator, and the native VLAN (VLAN 1) is explicitly excluded from the aggregated ports and the crosslink assigned to it.

NOTE: *The AMF management and domain VLANs are automatically added to the aggregator and the crosslink.*

Related Commands show atmf links statistics

switchport atmf-guestlink

Overview Guest links are used to provide basic AMF functionality to non AMF capable devices. Guest links can be configured for either a selected switch port or a range of switch ports and use generic protocols to collect status and configuration information that the guest devices make available.

Use the **no** variant of this command to remove the guest node functionality from the selected port or ports.

Syntax

```
switchport atmf-guestlink [class <GUEST-CLASS>] [ip <A.B.C.D> | ipv6 <X:X::X:X>]
no switchport atmf-guestlink
```

Parameter	Description
`class`	Set a Guest-class
<GUEST-CLASS>	The name of the guest class.
`ip`	Specifies that the address following will have an IPv4 format
<A.B.C.D>	The Guest-node's IP address in IPv4 format.
`ipv6`	Specifies that the address following will have an IPv6 format
<X:X::X:X>	The Guest-node's IP address in IPv6 format.

Default No guest links are configured.

Mode Interface

Example 1 To configure switch port 1.0.44 to be a guest link, that will connect to a guest node having a guest-class of **camera** and an IPv4 address of **192.168.3.3**, use the following commands:

```
node1# configure terminal
node1(config)# int port1.0.44
node1(config-if)# switchport atmf-guestlink class camera ip 192.168.3.3
node1(config-if)# end
```

Example 2 To configure switchport 1.0.41 to be a guest link, that will connect to a guest node having a guest-class of **phone** and an IPv6 address of **2001:db8:21e:10d::5**, use the following commands:

```
node1# configure terminal
node1(config)# int port1.0.41
node1(config-if)# switchport atmf-guestlink class phone ipv6 2000:db8:21e:10d::5
node1(config-if)# end
```

Example 3 To configure switch port 1.0.41 to be a guest link, using the default model type and learning method address, use the following commands:

```
node1# configure terminal
node1(config)# int port1.0.41
node1(config-if)# switchport atmf-guestlink
node1(config-if)# end
```

Example 4 To configure switch ports 1.0.52 to 1.0.54 to be guest links, for the guest class **camera**, use the following commands:

```
node1# configure terminal
node1(config)# int port1.0.41-port1.0.44
node1(config-if)# switchport atmf-guestlink class camera
node1(config-if)# end
```

Example 5 To remove the guest-link functionality from switchport 1.0.41, use the following commands:

```
node1# configure terminal
node1(config)# int port1.0.41
node1(config-if)# no switchport atmf-guestlink
node1(config-if)# end
```

Related Commands

atmf guest-class

discovery

http-enable

username

modeltype

show atmf links guest

show atmf guests

switchport atmf-link

Overview This command enables you to configure a port or aggregator to be an AMF up/down link. Running this command will automatically place the port or aggregator into trunk mode.

Use the **no** variant of this command to remove any AMF-link that may exist for the selected port or aggregated link.

Syntax

```
switchport atmf-link
no switchport atmf-link
```

Mode Interface Configuration for a switchport, a static aggregator or a dynamic channel group.

Usage Up/down links and virtual links interconnect domains in a vertical hierarchy, with the highest domain being the core domain. In effect, they form a tree of interconnected AMF domains. This tree must be loop-free. Therefore, you must configure your links so that no rings are formed only from up/down links and/or virtual links.

Within each domain, cross-links between AMF nodes define those nodes as siblings within the same domain. You can form rings by combining cross-links with up/down links and/or virtual links, as long as each AMF domain links upwards to only a single parent domain. Each domain may link downwards to multiple child domains.

For AMF links, we recommend not using VCStack ports that are configured as network ports. During AMF recovery, these ports revert to their default state of being VCStack ports, so AMF cannot use them for auto-recovery. We recommend using standard network ports instead of VCStack ports for AMF links, so you can take advantage of AMF recovery.

Example To make a switchport 1.0.1 an AMF up/down link, use the following commands:

```
Node_1# configure terminal
Node_1(config)# interface port1.0.1
Node_1(config-if)# switchport atmf-link
```

type atmf node

Overview This command configures a trigger to be activated at an AMF node join event or leave event.

Syntax

```
type atmf node {join|leave}
```

Parameter	Description
join	AMF node join event.
leave	AMF node leave event.

Mode Trigger Configuration

CAUTION: *Only configure this trigger on one device because it is a network wide event.*

Example 1 To configure trigger 5 to activate at an AMF node leave event, use the following commands. In this example the command is entered on node-1:

```
node1(config)# trigger 5
node1(config-trigger) type atmf node leave
```

Example 2 The following commands will configure trigger 5 to activate if an AMF node join event occurs on any node within the working set:

```
node1# atmf working-set group all
```

This command returns the following display:

```
====================
node1, node2, node3:
====================

Working set join
```

Note that the running the above command changes the prompt from the name of the local node, to the name of the AMF-Network followed, in square brackets, by the number of member nodes in the working set.

```
AMF-Net[3]# conf t
AMF-Net[3](config)# trigger 5
AMF-Net[3](config-trigger)# type atmf node leave
AMF-Net[3](config-trigger)# description "E-mail on AMF Exit"
AMF-Net[3](config-trigger)# active
```

Enter the name of the script to run at the trigger event.

```
AMF-Net[3](config-trigger)# script 1 email_me.scp
AMF-Net[3](config-trigger)# end
```

Display the trigger configurations

```
AMF-Net[3]# show trigger
```

This command returns the following display:

```
=======
node1:
========

TR# Type & Details     Description          Ac Te Tr Repeat     #Scr Days/Date
-------------------------------------------------------------------------------
001 Periodic (2 min)   Periodic Status Chk  Y  N  Y Continuous  1   smtwtfs
005 ATMF node (leave)  E-mail on ATMF Exit  Y  N  Y Continuous  1   smtwtfs
-------------------------------------------------------------------------------

==============
Node2, Node3,
==============

TR# Type & Details     Description          Ac Te Tr Repeat     #Scr Days/Date
-------------------------------------------------------------------------------
005 ATMF node (leave)  E-mail on ATMF Exit  Y  N  Y Continuous  1   smtwtfs
-------------------------------------------------------------------------------
```

Display the triggers configured on each of the nodes in the AMF Network.

```
AMF-Net[3]# show running-config trigger
```

This command returns the following display:

```
========
Node1:
========

trigger 1
 type periodic 2
 script 1 atmf.scp
trigger 5
 type atmf node leave
description "E-mail on ATMF Exit"
 script 1 email_me.scp
!

============
Node2, Node3:
============

trigger 5
 type atmf node leave
description "E-mail on ATMF Exit"
 script 1 email_me.scp
!
```

Related Commands show trigger

undebug atmf

Overview This command is an alias for the **no** variant of the debug atmf command.

username

Overview This command enables you to assign a **username** to a guest class. Guests may require a username and possibly also a password. In its non-encypted form the password must be between 1 and 32 characters and will allow spaces. In its encrypted form the password must be between 1 to 64 characters and will allow any character

Syntax

```
username <NAME> password [8] <USERPASS>
no username
```

Parameter	Description
`username`	Indicates that a user name is to follow
<NAME>	User name of the guest node
`password`	Indicates that a password (or specifier) is to follow.
`8`	Specifier indicating that the following password is encrypted. It's primary purpose is to differentiate between the configuration input and the CLI input. You should not specify this for CLI input
<USERPASS>	The password to be entered for the guest node.

Default No usernames configured

Mode AMF Guest Configuration Mode

Example 1 To assign the user name **reception** and the password of **secret** to an AMF guest node that has the guest class of **phone1** use the following commands:

```
node1# conf t
node1(config)# amf guest-class phone1
node1(config-atmf-guest)# username reception password secret
node1(config-atmf-guest)# end
```

Example 2 To remove a guest node username and password for the user guest class **phone1**, use the following commands:

```
node1# conf t
node1(config)# atmf guest-class phone1
node1(config-atmf-guest)# no username
node1(config-atmf-guest)# end
```

Related Commands

show atmf links detail

atmf guest-class

switchport atmf-guestlink

show atmf links guest

show atmf nodes

48 Dynamic Host Configuration Protocol (DHCP) Commands

Introduction

Overview

This chapter provides an alphabetical reference for commands used to configure DHCP.

Note that the DHCP client does not support tunnel interfaces.

For more information, see the DHCP Feature Overview and Configuration Guide, which is available at the above link on alliedtelesis.com.

For information on filtering and saving command output, see the "Getting Started with AlliedWare Plus" Feature Overview and Configuration Guide. This guide is available at the above link on alliedtelesis.com.

Command List

- "bootfile" on page 2300
- "clear ip dhcp binding" on page 2301
- "default-router" on page 2302
- "dns-server" on page 2303
- "domain-name" on page 2304
- "host (DHCP)" on page 2305
- "ip address dhcp" on page 2306
- "ip dhcp bootp ignore" on page 2308
- "ip dhcp leasequery enable" on page 2309
- "ip dhcp option" on page 2310
- "ip dhcp pool" on page 2312
- "ip dhcp-client default-route distance" on page 2313
- "ip dhcp-relay agent-option" on page 2315
- "ip dhcp-relay agent-option checking" on page 2317
- "ip dhcp-relay agent-option remote-id" on page 2319

- "ip dhcp-relay information policy" on page 2321
- "ip dhcp-relay maxhops" on page 2323
- "ip dhcp-relay max-message-length" on page 2324
- "ip dhcp-relay server-address" on page 2326
- "lease" on page 2328
- "network (DHCP)" on page 2330
- "next-server" on page 2331
- "option" on page 2332
- "probe enable" on page 2334
- "probe packets" on page 2335
- "probe timeout" on page 2336
- "probe type" on page 2337
- "range" on page 2338
- "route" on page 2339
- "service dhcp-relay" on page 2340
- "service dhcp-server" on page 2341
- "show counter dhcp-client" on page 2342
- "show counter dhcp-relay" on page 2343
- "show counter dhcp-server" on page 2347
- "show dhcp lease" on page 2349
- "show ip dhcp binding" on page 2351
- "show ip dhcp pool" on page 2353
- "show ip dhcp-relay" on page 2357
- "show ip dhcp server statistics" on page 2359
- "show ip dhcp server summary" on page 2361
- "subnet-mask" on page 2362

bootfile

Overview This command sets the boot filename for a DHCP server pool. This is the name of the boot file that the client should use in its bootstrap process. It may need to include a path.

The **no** variant of this command removes the boot filename from a DHCP server pool.

Syntax

```
bootfile <filename>
no bootfile
```

Parameter	Description
<filename>	The boot file name.

Mode DHCP Configuration

Example To configure the boot filename for a pool `P2`, use the command:

```
awplus# configure terminal
awplus(config)# ip dhcp pool P2
awplus(dhcp-config)# bootfile boot/main_boot.bt
```

clear ip dhcp binding

Overview This command clears either a specific lease binding or the lease bindings specified by the command or DHCP server. The command will only take effect on dynamically allocated bindings, not statically configured bindings.

Syntax

```
clear ip dhcp binding {ip <ip-address>|mac
<mac-address>|all|pool <pool-name>|range <low-ip-address>
<high-ip-address>}
```

Parameter	Description
`ip <ip-address>`	IPv4 address of the DHCP client, in dotted decimal notation in the format A.B.C.D.
`mac <mac-address>`	MAC address of the DHCP client, in hexadecimal notation in the format HHHH.HHHH.HHHH.
`all`	All DHCP bindings.
`pool <pool-name>`	Description used to identify DHCP server address pool. Valid characters are any printable character. If the name contains spaces then you must enclose these in “quotation marks”.
`range<low-ip-address> <high-ip-address>`	IPv4 address range for DHCP clients, in dotted decimal notation. The first IP address is the low end of the range, the second IP address is the high end of the range.

Mode User Exec and Privileged Exec

Usage A specific binding may be deleted by **ip** address or **mac** address, or several bindings may be deleted at once using **all**, **pool** or **range**.

Note that if you specify to clear the **ip** or **mac** address of what is actually a static DHCP binding, an error message is displayed. If **all**, **pool** or **range** are specified and one or more static DHCP bindings exist within those addresses, any dynamic entries within those addresses are cleared but any static entries are not cleared.

Examples To clear the specific IP address binding `192.168.1.1`, use the command:

```
awplus# clear ip dhcp binding ip 192.168.1.1
```

To clear all dynamic DHCP entries, use the command:

```
awplus# clear ip dhcp binding all
```

Related Commands show ip dhcp binding

default-router

Overview This command adds a default router to the DHCP address pool you are configuring. You can use this command multiple times to create a list of default routers on the client's subnet. This sets the router details using the pre-defined option 3. Note that if you add a user-defined option 3 using the **option** command, then you will override any settings created with this command.

The **no** variant of this command removes either the specified default router, or all default routers from the DHCP pool.

Syntax

```
default-router <ip-address>
no default-router [<ip-address>]
```

Parameter	Description
<ip-address>	IPv4 address of the default router, in dotted decimal notation.

Mode DHCP Configuration

Examples To add a router with an IP address 192.168.1.2 to the DHCP pool named P2, use the following commands:

```
awplus# configure terminal
awplus(config)# ip dhcp pool P2
awplus(dhcp-config)# default-router 192.168.1.2
```

To remove a router with an IP address 192.168.1.2 to the DHCP pool named P2, use the following commands:

```
awplus# configure terminal
awplus(config)# ip dhcp pool P2
awplus(dhcp-config)# no default-router 192.168.1.2
```

To remove all routers from the DHCP pool named P2, use the following commands:

```
awplus# configure terminal
awplus(config)# ip dhcp pool P2
awplus(dhcp-config)# no default-router
```

dns-server

Overview This command adds a Domain Name System (DNS) server to the DHCP address pool you are configuring. You can use this command multiple times to create a list of DNS name servers available to the client. This sets the DNS server details using the pre-defined option 6.

Note that if you add a user-defined option 6 using the option command, then you will override any settings created with this command.

The **no** variant of this command removes either the specified DNS server, or all DNS servers from the DHCP pool.

Syntax

```
dns-server <ip-address>
no dns-server [<ip-address>]
```

Parameter	Description
<ip-address>	IPv4 address of the DNS server, in dotted decimal notation.

Mode DHCP Configuration

Examples To add the DNS server with the assigned IP address 192.168.1.1 to the DHCP pool named P1, use the following commands:

```
awplus# configure terminal
awplus(config)# ip dhcp pool P2
awplus(dhcp-config)# dns-server 192.168.1.1
```

To remove the DNS server with the assigned IP address 192.168.1.1 from the DHCP pool named P1, use the following commands:

```
awplus# configure terminal
awplus(config)# ip dhcp pool P2
awplus(dhcp-config)# no dns-server 192.168.1.1
```

To remove all DNS servers from the DHCP pool named P1, use the following commands:

```
awplus# configure terminal
awplus(config)# ip dhcp pool P2
awplus(dhcp-config)# no dns-server
```

Related Commands

default-router

option

service dhcp-server

show ip dhcp pool

subnet-mask

domain-name

Overview This command adds a domain name to the DHCP address pool you are configuring. Use this command to specify the domain name that a client should use when resolving host names using the Domain Name System. This sets the domain name details using the pre-defined option 15.

Note that if you add a user-defined option 15 using the option command, then you will override any settings created with this command.

The **no** variant of this command removes the domain name from the address pool.

Syntax

```
domain-name <domain-name>
no domain-name
```

Parameter	Description
<domain-name>	The domain name you wish to assign the DHCP pool. Valid characters are any printable character. If the name contains spaces then you must enclose it in "quotation marks".

Mode DHCP Configuration

Examples To add the domain name `Nerv_Office` to DHCP pool `P2`, use the commands:

```
awplus# configure terminal
awplus(config)# ip dhcp pool P2
awplus(dhcp-config)# domain-name Nerv_Office
```

To remove the domain name `Nerv_Office` from DHCP pool `P2`, use the commands:

```
awplus# configure terminal
awplus(config)# ip dhcp pool P2
awplus(dhcp-config)# no domain-name Nerv_Office
```

Related Commands

default-router

dns-server

option

service dhcp-server

show ip dhcp pool

subnet-mask

host (DHCP)

Overview This command adds a static host address to the DHCP address pool you are configuring. The client with the matching MAC address is permanently assigned this IP address. No other clients can request it.

The **no** variant of this command removes the specified host address from the DHCP pool. Use the **no host all** command to remove all static host addresses from the DHCP pool.

Syntax

```
host <ip-address> <mac-address>
no host <ip-address>
no host all
```

Parameter	Description
<ip-address>	IPv4 address of the DHCP client, in dotted decimal notation in the format A.B.C.D
<mac-address>	MAC address of the DHCP client, in hexadecimal notation in the format HHHH.HHHH.HHHH

Mode DHCP Configuration

Usage Note that a network/mask must be configured using a **network** command before issuing a **host** command. Also note that a host address must match a network to add a static host address.

Examples To add the host at `192.168.1.5` with the MAC address `000a.451d.6e34` to DHCP pool `1`, use the commands:

```
awplus# configure terminal
awplus(config)# ip dhcp pool 1
awplus(dhcp-config)# network 192.168.1.0/24
awplus(dhcp-config)# host 192.168.1.5 000a.451d.6e34
```

To remove the host at `192.168.1.5` with the MAC address `000a.451d.6e34` from DHCP pool `1`, use the commands:

```
awplus# configure terminal
awplus(config)# ip dhcp pool 1
awplus(dhcp-config)# no host 192.168.1.5 000a.451d.6e34
```

Related Commands

lease

range

show ip dhcp pool

ip address dhcp

Overview This command activates the DHCP client on the interface you are configuring. This allows the interface to use the DHCP client to obtain its IP configuration details from a DHCP server on its connected network.

The **client-id** and **hostname** parameters are identifiers that you may want to set in order to interoperate with your existing DHCP infrastructure. If neither option is needed, then the DHCP server uses the MAC address field of the request to identify the host.

The DHCP client supports the following IP configuration options:

- Option 1 - the subnet mask for your device.
- Option 3 - a list of default routers.
- Option 6 - a list of DNS servers. This list appends the DNS servers set on your device with the ip name-server command.
- Option 15 - a domain name used to resolve host names. This option replaces the domain name set with the ip domain-name command. Your device ignores this domain name if it has a domain list set using the ip domain-list command.
- Option 51 - lease expiration time.

The **no** variant of this command stops the interface from obtaining IP configuration details from a DHCP server.

Syntax

```
ip address dhcp [client-id <interface>] [hostname <hostname>]
no ip address dhcp
```

Parameter	Description
<interface>	The name of the interface you are activating the DHCP client on. If you specify this, then the MAC address associated with the specified interface is sent to the DHCP server in the optional identifier field. Default: no default
<hostname>	The hostname for the DHCP client on this interface. Typically this name is provided by the ISP. Default: no default

Mode Interface Configuration for a VLAN interface or a PPP interface.

Examples To set the interface vlan10 to use DHCP to obtain an IP address, use the commands:

```
awplus# configure terminal
awplus(config)# interface vlan10
awplus(config-if)# ip address dhcp
```

To stop the interface vlan10 from using DHCP to obtain its IP address, use the commands:

```
awplus# configure terminal
awplus(config)# interface vlan10
awplus(config-if)# no ip address dhcp
```

Related Commands

ip address (IP Addressing and Protocol)

show ip interface

show running-config

ip dhcp bootp ignore

Overview This command configures the DHCP server to ignore any BOOTP requests it receives. The DHCP server accepts BOOTP requests by default.

The **no** variant of this command configures the DHCP server to accept BOOTP requests. This is the default setting.

Syntax

```
ip dhcp bootp ignore
no ip dhcp bootp ignore
```

Mode Global Configuration

Examples To configure the DHCP server to ignore BOOTP requests, use the commands:

```
awplus# configure terminal
awplus(config)# ip dhcp bootp ignore
```

To configure the DHCP server to respond to BOOTP requests, use the commands:

```
awplus# configure terminal
awplus(config)# no ip dhcp bootp ignore
```

Related Commands show ip dhcp server summary

ip dhcp leasequery enable

Overview Use this command to enable the DHCP server to respond to DHCPLEASEQUERY packets. Enabling the DHCP leasequery feature allows a DHCP Relay Agent to obtain IP address information directly from the DHCP server using DHCPLEASEQUERY messages.

Use the **no** variant of this command to disable the support of DHCPLEASEQUERY packets.

For more information, see the DHCP Feature Overview and Configuration Guide.

Syntax

```
ip dhcp leasequery enable
no ip dhcp leasequery enable
```

Default DHCP leasequery support is disabled by default.

Mode Global Configuration

Examples To enable DHCP leasequery support, use the commands:

```
awplus# configure terminal
awplus(config)# ip dhcp leasequery enable
```

To disable DHCP leasequery support, use the commands:

```
awplus# configure terminal
awplus(config)# no ip dhcp leasequery enable
```

Related Commands

show counter dhcp-server

show ip dhcp server statistics

show ip dhcp server summary

ip dhcp option

Overview This command creates a user-defined DHCP option. Options with the same number as one of the pre-defined options override the standard option definition. The pre-defined options use the option numbers 1, 3, 6, 15, and 51.

You can use this option when configuring a DHCP pool, by using the option command.

The **no** variant of this command removes either the specified user-defined option, or removes all user-defined options. This also automatically removes the user-defined options from the associated DHCP address pools.

Syntax

```
ip dhcp option <1-254> [name <option-name>] [<option-type>]
no ip dhcp option [<1-254>|<option-name>]
```

Parameter	Description	
<1-254>	The option number of the option. Options with the same number as one of the standard options overrides the standard option definition.	
<option-name>	Option name used to identify the option. You cannot use a number as the option name. Valid characters are any printable character. If the name contains spaces then you must enclose it in “quotation marks”. Default: no default	
<option-type>	The option value. You must specify a value that is appropriate to the option type:	
	`asci`	An ASCII text string
	`hex`	A hexadecimal string. Valid characters are the numbers 0–9 and letters a–f. Embedded spaces are not valid. The string must be an even number of characters, from 2 and 256 characters long.
	`ip`	An IPv4 address or mask that has the dotted decimal A.B.C.D notation. To create a list of IP addresses, you must add each IP address individually by using the option command multiple times.
	`integer`	A number from 0 to 4294967295.
	`flag`	A value that either sets (to 1) or unsets (to 0) a flag: **true**, **on**, or **enabled** will set the flag. **f alse**, **off** or **disabled** will unset the flag.

Mode Global Configuration

Examples

To define a user-defined ASCII string option as option 66, without a name, use the command:

```
awplus# configure terminal
awplus(config)# ip dhcp option 66 ascii
```

To define a user-defined hexadecimal string option as option 46, with the name "tcpip-node-type", use the commands:

```
awplus# configure terminal
awplus(config)# ip dhcp option 46 name tcpip-node-type hex
```

To define a user-defined IP address option as option 175, with the name `special-address`, use the commands:

```
awplus# configure terminal
awplus(config)# ip dhcp option 175 name special-address ip
```

To remove the specific user-defined option with the option number `12`, use the commands:

```
awplus# configure terminal
awplus(config)# no ip dhcp option 12
```

To remove the specific user-defined option with the option name `perform-router-discovery`, use the commands:

```
awplus# configure terminal
awplus(config)# no ip dhcp option perform-router-discovery
```

To remove all user-defined option definitions, use the commands:

```
awplus# configure terminal
awplus(config)# no ip dhcp option
```

Related Commands

default-router

dns-server

domain-name

option

service dhcp-server

show ip dhcp server summary

subnet-mask

ip dhcp pool

Overview This command will enter the configuration mode for the pool name specified. If the name specified is not associated with an existing pool, the device will create a new pool with this name, then enter the configuration mode for the new pool.

Once you have entered the DHCP configuration mode, all commands executed before the next **exit** command will apply to this pool.

You can create multiple DHCP pools on devices with multiple interfaces. This allows the device to act as a DHCP server on multiple interfaces to distribute different information to clients on the different networks.

The **no** variant of this command deletes the specific DHCP pool.

Syntax

```
ip dhcp pool <pool-name>
no ip dhcp pool <pool-name>
```

Parameter	Description
<pool-name>	Description used to identify this DHCP pool. Valid characters are any printable character. If the name contains spaces then you must enclose it in “quotation marks”.

Mode Global Configuration

Example To create the DHCP pool named `P2` and enter DHCP Configuration mode, use the commands:

```
awplus# configure terminal
awplus(config)# ip dhcp pool P2
awplus(dhcp-config)#
```

To delete the DHCP pool named `P2`, use the commands:

```
awplus# configure terminal
awplus(config)# no ip dhcp pool P2
```

Related Commands service dhcp-server

ip dhcp-client default-route distance

Overview Use this command to specify an alternative Administrative Distance (AD) for the current default route (from DHCP) for an interface.

Use the **no** variant of this command to set the AD back to the default of 1.

Syntax

```
ip dhcp-client default-route distance [<1-255>]
no ip dhcp-client default-route distance
```

Parameter	Description
<1-255>	Administrative Distance (AD) from the range 1 though 255.

Default 1

Mode Interface Configuration

Usage DHCP client interfaces can automatically add a default route with an AD of 1 into the IP Routing Information Base (RIB).

Any pre-existing default route(s) via alternative interfaces (configured with a higher AD) will no longer be selected as the preferred forwarding path for traffic when the DHCP based default route is added to the IP routing table.

This can be problematic if the DHCP client is operating via an interface that is only intended to be used for back-up interface redundancy purposes, such as a VLAN containing a single switchport, or a 4G cellular interface on an AR-Series Firewall.

Use this command to set the AD of the default route (via a specific DHCP client interface) to a non-default (higher cost) value, ensuring any pre-existing default route(s) via any other interface(s) continue to be selected as the preferred forwarding path for network traffic.

When the command is used, the static default route is deleted from the RIB, the distance value of the route is modified to the configured distance value, then it is reinstalled into the RIB.

Examples To set the AD for the default route added by DHCP via cellular interface wwan0 to 150, use the commands:

```
awplus# configure terminal
awplus(config)# interface wwan0
awplus(config-if)# ip dhcp-client default-route distance 150
```

To set the AD for the default route back to the default value of 1, use the commands:

```
awplus# configure terminal
awplus(config)# interface wwan0
awplus(config-if)# no ip dhcp-client default-route distance
```

Related Commands

show ip route

show ip route database

Command changes

Version 5.4.7-0.2 Command added.

ip dhcp-relay agent-option

Overview This command enables the DHCP Relay Agent to insert the DHCP Relay Agent Information Option (Option 82) into the client-request packets that it relays to its DHCP server. This allows the DHCP Relay Agent to pass on information to the server about the network location of the client device. The DHCP Relay Agent strips the DHCP Relay Agent Option 82 field out of the DHCP server's response, so that the DHCP client never sees this field.

When the DHCP Relay Agent appends its DHCP Relay Agent Option 82 data into the packet, it first overwrites any pad options present; then if necessary, it increases the packet length to accommodate the DHCP Relay Agent Option 82 data.

The **no** variant of this command stops the DHCP Relay Agent from appending the Option 82 field onto DHCP requests before forwarding it to the server.

For DHCP Relay Agent and DHCP Relay Agent Option 82 introductory information, see the DHCP Feature Overview and Configuration Guide.

NOTE: *The DHCP-relay service might alter the content of the DHCP Relay Agent Option 82 field, if the commands ip dhcp-relay agent-option and ip dhcp-relay information policy have been configured.*

Syntax

```
ip dhcp-relay agent-option
no ip dhcp-relay agent-option
```

Default DHCP Relay Agent Information Option (Option 82) insertion is disabled by default.

Mode Interface Configuration for a VLAN interface or a PPP interface.

Usage Use this command to alter the DHCP Relay Agent Option 82 setting when your device is the first hop for the DHCP client. To limit the maximum length of the packet, use the ip dhcp-relay max-message-length command.

Examples To make the DHCP Relay Agent listening on `vlan15` append the DHCP Relay Agent Option 82 field, use the commands:

```
awplus# configure terminal
awplus(config)# interface vlan15
awplus(config-if)# ip dhcp-relay agent-option
```

To stop the DHCP Relay Agent from appending the DHCP Relay Agent Option 82 field on `vlan15`, use the commands:

```
awplus# configure terminal
awplus(config)# interface vlan15
awplus(config-if)# no ip dhcp-relay agent-option
```

To make the relay agent listening on PPP interface `ppp0` append the DHCP Relay Agent Option 82 field, use the commands:

```
awplus# configure terminal
awplus(config)# interface ppp0
awplus(config-if)# ip dhcp-relay agent-option
```

To stop the relay agent from appending the DHCP Relay Agent Option 82 field on PPP interface `ppp0`, use the commands:

```
awplus# configure terminal
awplus(config)# interface ppp0
awplus(config-if)# no ip dhcp-relay agent-option
```

Related Commands

ip dhcp-relay agent-option remote-id

ip dhcp-relay information policy

ip dhcp-relay max-message-length

service dhcp-relay

ip dhcp-relay agent-option checking

Overview This command enables the DHCP Relay Agent to check DHCP Relay Agent Information Option (Option 82) information in response packets returned from DHCP servers. If the information does not match the information it has for its own client (downstream) interface then the DHCP Relay Agent drops the packet. Note that ip dhcp-relay agent-option must be configured.

The DHCP Relay Agent Option 82 field is included in relayed client DHCP packets if:

- DHCP Relay Agent Option 82 is enabled (ip dhcp-relay agent-option), and
- DHCP Relay Agent is enabled on the device (service dhcp-relay)

For DHCP Relay Agent and DHCP Relay Agent Option 82 introductory information, see the DHCP Feature Overview and Configuration Guide.

Syntax

```
ip dhcp-relay agent-option checking
no ip dhcp-relay agent-option checking
```

Mode Interface Configuration for a VLAN interface or a PPP interface.

Examples To make the DHCP Relay Agent listening on vlan10 check the DHCP Relay Agent Information Option (Option 82) field, use the commands:

```
awplus# configure terminal
awplus(config)# interface vlan10
awplus(config-if)# ip dhcp-relay agent-option
awplus(config-if)# ip dhcp-relay agent-option checking
```

To stop the DHCP Relay Agent on vlan10 from checking the DHCP Relay Agent Information Option (Option 82) field, use the commands:

```
awplus# configure terminal
awplus(config)# interface vlan10
awplus(config-if)# no ip dhcp-relay agent-option checking
```

To make the relay agent listening on PPP interface ppp0 check the DHCP Relay Agent Information Option (Option 82) field, use the commands:

```
awplus# configure terminal
awplus(config)# interface ppp0
awplus(config-if)# ip dhcp-relay agent-option
awplus(config-if)# ip dhcp-relay agent-option checking
```

To stop the relay agent from checking the DHCP Relay Agent Information Option (Option 82) field on PPP interface ppp0, use the commands:

```
awplus# configure terminal
awplus(config)# interface ppp0
awplus(config-if)# no ip dhcp-relay agent-option checking
```

Related Commands

ip dhcp-relay agent-option

ip dhcp-relay agent-option remote-id

ip dhcp-relay information policy

service dhcp-relay

ip dhcp-relay agent-option remote-id

Overview Use this command to specify the Remote ID sub-option of the DHCP Relay Agent Option 82 field the DHCP Relay Agent inserts into clients' request packets. The Remote ID identifies the device that is inserting the DHCP Relay Agent Option 82 information. If a Remote ID is not specified, the Remote ID sub-option is set to the device's MAC address.

Use the **no** variant of this command to return the Remote ID for an interface.

For DHCP Relay Agent and DHCP Relay Agent Option 82 introductory information, see the DHCP Feature Overview and Configuration Guide.

Syntax

```
ip dhcp-relay agent-option remote-id <remote-id>
no ip dhcp-relay agent-option remote-id
```

Parameter	Description
<remote-id>	An alphanumeric (ASCII) string, 1 to 63 characters in length. Additional characters allowed are hyphen (-), underscore (_) and hash (#). Spaces are not allowed.

Default The Remote ID is set to the device's MAC address by default.

Mode Interface Configuration for a VLAN interface or a PPP interface.

Usage The Remote ID sub-option is included in the DHCP Relay Agent Option 82 field of relayed client DHCP packets if:

- DHCP Relay Agent Option 82 is enabled (ip dhcp-relay agent-option), and
- DHCP Relay Agent is enabled on the device (service dhcp-relay)

Examples To set the Remote ID to `myid` for client DHCP packets received on `vlan1`, use the commands:

```
awplus# configure terminal
awplus(config)# interface vlan1
awplus(config-if)# ip dhcp-relay agent-option remote-id myid
```

To remove the Remote ID specified for `vlan1`, use the commands:

```
awplus# configure terminal
awplus(config)# interface vlan1
awplus(config-if)# no ip dhcp-relay agent-option remote-id
```

To set the Remote ID to `myid` for client DHCP packets received on PPP interface `ppp0`, use the commands:

```
awplus# configure terminal
awplus(config)# interface ppp0 timeslots all
awplus(config-if)# ip dhcp-relay agent-option remote-id myid
```

To remove the Remote ID specified for PPP interface `ppp0`, use the commands:

```
awplus# configure terminal
awplus(config)# interface ppp0 timeslots all
awplus(config-if)# no ip dhcp-relay agent-option remote-id
```

Related Commands

ip dhcp-relay agent-option

ip dhcp-relay agent-option checking

show ip dhcp-relay

ip dhcp-relay information policy

Overview This command sets the policy for how the DHCP relay deals with packets arriving from the client that contain DHCP Relay Agent Option 82 information.

If the command **ip dhcp-relay agent-option** has not been configured, then this command has no effect at all - no alteration is made to Option 82 information in packets arriving from the client side.

However, if the command **ip dhcp-relay agent-option** has been configured, this command modifies how the DHCP relay service deals with cases where the packet arriving from the client side already contains DHCP Relay Agent Option 82 information.

This command sets the action that the DHCP relay should take when a received DHCP client request contains DHCP Relay Agent Option 82 information.

By default, the DHCP Relay Agent replaces any existing DHCP Relay Agent Option 82 field with its own DHCP Relay Agent field. This is equivalent to the functionality of the **replace** parameter.

The **no** variant of this command returns the policy to the default behavior - i.e. replacing the existing DHCP Relay Agent Option 82 field.

For DHCP Relay Agent and DHCP Relay Agent Option 82 introductory information, see the DHCP Feature Overview and Configuration Guide.

NOTE: *The DHCP-relay service might alter the content of the DHCP Relay Agent Option 82 field, if the commands ip dhcp-relay agent-option and ip dhcp-relay information policy have been configured.*

Syntax

```
ip dhcp-relay information policy {append|drop|keep|replace}
no ip dhcp-relay information policy
```

Parameter	Description
`append`	The DHCP Relay Agent appends the DHCP Relay Agent Option 82 field of the packet with its own DHCP Relay Agent Option 82 details.
`drop`	The DHCP Relay Agent discards the packet.
`keep`	The DHCP Relay Agent forwards the packet without altering the DHCP Relay Agent Option 82 field.
`replace`	The DHCP Relay Agent replaces the existing DHCP Relay Agent details in the DHCP Relay Agent Option 82 field with its own details before forwarding the packet.

Mode Interface Configuration for a VLAN interface or a PPP interface.

Examples

To make the DHCP Relay Agent listening on `vlan15` drop any client requests that already contain DHCP Relay Agent Option 82 information, use the commands:

```
awplus# configure terminal
awplus(config)# interface vlan15
awplus(config-if)# ip dhcp-relay information policy drop
```

To reset the DHCP relay information policy to the default policy for interface `vlan15`, use the commands:

```
awplus# configure terminal
awplus(config)# interface vlan15
awplus(config-if)# no ip dhcp-relay information policy
```

Related Commands

ip dhcp-relay agent-option

ip dhcp-relay agent-option checking

service dhcp-server

ip dhcp-relay maxhops

Overview This command sets the hop count threshold for discarding BOOTP messages. When the hops field in a BOOTP message exceeds the threshold, the DHCP Relay Agent discards the BOOTP message. The hop count threshold is set to 10 hops by default.

Use the **no** variant of this command to reset the hop count to the default.

For DHCP Relay Agent and DHCP Relay Agent Option 82 introductory information, see the DHCP Feature Overview and Configuration Guide.

Syntax

```
ip dhcp-relay maxhops <1-255>
no ip dhcp-relay maxhops
```

Parameter	Description
<1-255>	The maximum hop count value.

Default The default hop count threshold is 10 hops.

Mode Interface Configuration for a VLAN interface or a PPP interface.

Example To set the maximum number of hops to 5 for packets received on interface `vlan15`, use the commands:

```
awplus# configure terminal
awplus(config)# interface vlan15
awplus(config-if)# ip dhcp-relay maxhops 5
```

Related Commands service dhcp-relay

ip dhcp-relay max-message-length

Overview This command applies when the device is acting as a DHCP Relay Agent and DHCP Relay Agent Option 82 insertion is enabled. It sets the maximum DHCP message length (in bytes) for the DHCP packet with its DHCP Relay Agent Option 82 data inserted. From this value it calculates the maximum packet size that it will accept at its input. Packets that arrive greater than this value will be dropped.

The **no** variant of this command sets the maximum message length to its default of 1400 bytes.

For DHCP Relay Agent and DHCP Relay Agent Option 82 introductory information, see the DHCP Feature Overview and Configuration Guide.

Syntax

```
ip dhcp-relay max-message-length <548-1472>
no ip dhcp-relay max-message-length
```

Parameter	Description
<548-1472>	The maximum DHCP message length (this is the message header plus the inserted DHCP option fields in bytes).

Default The default is 1400 bytes.

Mode Interface Configuration for a VLAN interface or a PPP interface.

Usage When a DHCP Relay Agent (that has DHCP Relay Agent Option 82 insertion enabled) receives a request packet from a DHCP client, it will append the DHCP Relay Agent Option 82 component data, and forward the packet to the DHCP server. The DHCP client will sometimes issue packets containing pad option fields that can be overwritten with Option 82 data.

Where there are insufficient pad option fields to contain all the DHCP Relay Agent Option 82 data, the DHCP Relay Agent will increase the packet size to accommodate the DHCP Relay Agent Option 82 data. If the new (increased) packet size exceeds that defined by the **maximum-message-length** parameter, then the DHCP Relay Agent will drop the packet.

NOTE: *Before setting this command, you must first run the ip dhcp-relay agent-option command. This will allow the DHCP Relay Agent Option 82 fields to be appended.*

Example To set the maximum DHCP message length to 1200 bytes for packets arriving in interface `vlan7`, use the commands:

```
awplus# configure terminal
awplus(config)# interface vlan7
awplus(config-if)# ip dhcp-relay max-message-length 1200
```

To reset the maximum DHCP message length to the default of 1400 bytes for packets arriving in interface `vlan7`, use the commands:

```
awplus# configure terminal
awplus(config)# interface vlan7
awplus(config-if)# no ip dhcp-relay max-message-length
```

Related Commands service dhcp-relay

ip dhcp-relay server-address

Overview This command adds a DHCP server for the DHCP Relay Agent to forward client DHCP packets to on a particular interface. You can add up to five DHCP servers on each device interface that the DHCP Relay Agent is listening on.

The **no** variant of this command deletes the specified DHCP server from the list of servers available to the DHCP relay agent.

The **no ip dhcp-relay** command removes all DHCP relay settings from the interface.

For DHCP Relay Agent and DHCP Relay Agent Option 82 introductory information, see the DHCP Feature Overview and Configuration Guide.

Syntax

```
ip dhcp-relay server-address {<ipv4-address>|<ipv6-address>
<server-interface>}
```

```
no ip dhcp-relay server-address {<ipv4-address>|<ipv6-address>
<server-interface>}
```

```
no ip dhcp-relay
```

Parameter	Description
<ipv4-address>	Specify the IPv4 address of the DHCP server for DHCP Relay Agent to forward client DHCP packets to, in dotted decimal notation. The IPv4 address uses the format A.B.C.D.
<ipv6-address>	Specify the IPv6 address of the DHCPv6 server for DHCPv6 Relay Agent to forward client DHCP packets to, in hexadecimal notation.
<server-interface>	Specify the interface name of the DHCPv6 server. It is only required for a DHCPv6 server with an IPv6 address.

Mode Interface Configuration for a VLAN interface or a PPP interface.

Usage For a DHCP server with an IPv6 address you must specify the interface for the DHCP server. See examples below for configuration differences between IPv4 and IPv6 DHCP relay servers.

See also the service dhcp-relay command to enable the DHCP Relay Agent on your device. The ip dhcp-relay server-address command defines a relay destination on an interface on the device, needed by the DHCP Relay Agent to relay DHCP client packets to a DHCP server.

Examples

To enable the DHCP Relay Agent to relay DHCP packets on interface `vlan2` to the DHCP server with the IPv4 address `192.0.2.200`, use the commands:

```
awplus# configure terminal
awplus(config)# service dhcp-relay
awplus(config)# interface vlan2
awplus(config-if)# ip dhcp-relay server-address 192.0.2.200
```

To remove the DHCP server with the IPv4 address `192.0.2.200` from the list of servers available to the DHCP Relay Agent on interface `vlan2`, use the commands:

```
awplus# configure terminal
awplus(config)# interface vlan2
awplus(config-if)# no ip dhcp-relay server-address 192.0.2.200
```

To enable the DHCP Relay Agent on your device to relay DHCP packets on interface `vlan10` to the DHCP server with the IPv6 address `2001:0db8:010d::1` on interface `vlan20`, use the commands:

```
awplus# configure terminal
awplus(config)# service dhcp-relay
awplus(config)# interface vlan10
awplus(config-if)# ip dhcp-relay server-address
2001:0db8:010d::1 vlan20
```

To remove the DHCP server with the IPv6 address `2001:0db8:010d::1` on interface `vlan20` from the list of servers available to the DHCP Relay Agent on interface `vlan10`, use the commands:

```
awplus# configure terminal
awplus(config)# interface vlan10
awplus(config-if)# no ip dhcp-relay server-address
2001:0db8:010d::1 vlan20
```

To disable DHCP relay on `vlan10`, use the commands:

```
awplus# configure terminal
awplus(config)# interface vlan10
awplus(config-if)# no ip dhcp-relay
```

Related Commands

service dhcp-relay

lease

Overview This command sets the expiration time for a leased address for the DHCP address pool you are configuring. The time set by the days, hours, minutes and seconds is cumulative. The minimum total lease time that can be configured is 20 seconds. The maximum total lease time that can be configured is 120 days.

Note that if you add a user-defined option 51 using the option command, then you will override any settings created with this command. Option 51 specifies a lease time of 1 day.

Use the **infinite** parameter to set the lease expiry time to infinite (leases never expire).

Use the **no** variant of this command to return the lease expiration time back to the default of one day.

Syntax

```
lease <days> <hours> <minutes> [<seconds>]
lease infinite
no lease
```

Parameter	Description
<days>	The number of days, from 0 to 120, that the lease expiry time is configured for. Default: 1
<hours>	The number of hours, from 0 to 24, that the lease expiry time is configured for. Default: 0
<minutes>	The number of minutes, from 0 to 60, the lease expiry time is configured for. Default: 0
<seconds>	The number of seconds, from 0 to 60, the lease expiry time is configured for.
`infinite`	The lease never expires.

Default The default lease time is 1 day.

Mode DHCP Configuration

Examples To set the lease expiration time for address pool `P2` to 35 minutes, use the commands:

```
awplus# configure terminal
awplus(config)# ip dhcp pool P2
awplus(dhcp-config)# lease 0 0 35
```

To set the lease expiration time for the address pool `Nerv_Office` to 1 day, 5 hours, and 30 minutes, use the commands:

```
awplus# configure terminal
awplus(config)# ip dhcp pool Nerv_Office
awplus(dhcp-config)# lease 1 5 30
```

To set the lease expiration time for the address pool `P3` to 20 seconds, use the commands:

```
awplus# configure terminal
awplus(config)# ip dhcp pool P3
awplus(dhcp-config)# lease 0 0 0 20
```

To set the lease expiration time for the pool to never expire, use the command:

```
awplus(dhcp-config)# lease infinite
```

To return the lease expiration time to the default of one day, use the command:

```
awplus(dhcp-config)# no lease
```

Related Commands

option

service dhcp-server

network (DHCP)

Overview This command sets the network (subnet) that the DHCP address pool applies to.

The **no** variant of this command removes the network (subnet) from the DHCP address pool.

Syntax

```
network
{<ip-subnet-address/prefix-length>|<ip-subnet-address/mask>}
no network
```

Parameter	Description
<ip-subnet-address/prefix-length>	The IPv4 subnet address in dotted decimal notation followed by the prefix length in slash notation.
<ip-subnet-address/mask>	The IPv4 subnet address in dotted decimal notation followed by the subnet mask in dotted decimal notation.

Mode DHCP Configuration

Usage This command will fail if it would make existing ranges invalid. For example, if they do not lie within the new network you are configuring.

The **no** variant of this command will fail if ranges still exist in the pool. You must remove all ranges in the pool before issuing a **no network** command to remove a network from the pool.

Examples To configure a network for the address pool `P2`, where the subnet is `192.0.2.5` and the mask is `255.255.255.0`, use the commands:

```
awplus# configure terminal
awplus(config)# ip dhcp pool P2
awplus(dhcp-config)# network 192.0.2.5/24
```

or you can use dotted decimal notation instead of slash notation for the subnet-mask:

```
awplus# configure terminal
awplus(config)# ip dhcp pool P2
awplus(dhcp-config)# network 192.0.2.5 255.255.255.0
```

Related Commands service dhcp-server

subnet-mask

next-server

Overview This command sets the next server address for a DHCP server pool. It is the address of the next server that the client should use in its bootstrap process.

The **no** variant of this command removes the next server address from the DHCP address pool.

Syntax

```
next-server <ip-address>
no next-server
```

Parameter	Description
<ip-address>	The server IP address, entered in dotted decimal notation.

Mode DHCP Configuration

Example To set the next-server address for the address pool `P2`, use the commands:

```
awplus# configure terminal
awplus(config)# ip dhcp pool P2
awplus(dhcp-config)# next-server 192.0.2.2
```

option

Overview This command adds a user-defined option to the DHCP address pool you are configuring. For the **hex**, **integer**, and **flag** option types, if the option already exists, the new option overwrites the existing option's value. Options with an **ip** type can hold a list of IP addresses or masks (i.e. entries that have the A.B.C.D address format), so if the option already exists in the pool, then the new IP address is added to the list of existing IP addresses.

Options with the same number as one of the pre-defined options override the standard option definition. The pre-defined options use the option numbers 1, 3, 6, 15, and 51.

The **no** variant of this command removes the specified user-defined option from the DHCP pool, or all user-defined options from the DHCP pool.

Syntax

```
option [<1-254>|<option-name>] <option-value>
no option [<1-254>|<option-value>]
```

Parameter	Description	
<1-254>	The option number of the option. Options with the same number as one of the standard options overrides the standard option definition.	
<option-name>	Option name associated with the option.	
<option-value>	The option value. You must specify a value that is appropriate to the option type:	
	`hex`	A hexadecimal string. Valid characters are the numbers 0–9 and letters a–f. Embedded spaces are not valid. The string must be an even number of characters, from 2 and 256 characters long.
	`ip`	An IPv4 address or mask that has the dotted decimal A.B.C.D notation. To create a list of IP addresses, you must add each IP address individually using the option command multiple times.
	`integer`	A number from 0 to 4294967295.
	`flag`	A value of either true, on, or enabled to set the flag, or false, off or disabled to unset the flag.

Mode DHCP Configuration

Examples

To add the ASCII-type option named `tftp-server-name` to the pool `P2` and give the option the value `server1`, use the commands:

```
awplus# configure terminal
awplus(config)# ip dhcp pool P2
awplus(dhcp-config)# option tftp-server-name server1
```

To add the hex-type option named `tcpip-node-type` to the pool `P2` and give the option the value `08af`, use the commands:

```
awplus# configure terminal
awplus(config)# ip dhcp pool P2
awplus(dhcp-config)# option tcpip-node-type 08af
```

To add multiple IP addresses for the ip-type option `175`, use the command:

```
awplus(dhcp-config)# option 175 192.0.2.6
awplus(dhcp-config)# option 175 192.0.2.12
awplus(dhcp-config)# option 175 192.0.2.33
```

To add the option `179` to a pool, and give the option the value `123456`, use the command:

```
awplus(dhcp-config)# option 179 123456
```

To add a user-defined flag option with the name `perform-router-discovery`, use the command:

```
awplus(dhcp-config)# option perform-router-discovery yes
```

To clear all user-defined options from a DHCP address pool, use the command:

```
awplus(dhcp-config)# no option
```

To clear a user-defined option, named `tftp-server-name`, use the command:

```
awplus(dhcp-config)# no option tftp-server-name
```

Related Commands

dns-server

ip dhcp option

lease

service dhcp-server

show ip dhcp pool

probe enable

Overview Use this command to enable lease probing for a DHCP pool. Probing is used by the DHCP server to check if an IP address it wants to lease to a client is already being used by another host.

The **no** variant of this command disables probing for a DHCP pool.

Syntax

```
probe enable
no probe enable
```

Default Probing is enabled by default.

Mode DHCP Pool Configuration

Examples To enable probing for pool `P2`, use the commands:

```
awplus# configure terminal
awplus(config)# ip dhcp pool P2
awplus(dhcp-config)# probe enable
```

To disable probing for pool `P2`, use the commands:

```
awplus# configure terminal
awplus(config)# ip dhcp pool P2
awplus(dhcp-config)# no probe enable
```

Related Commands

ip dhcp pool

probe packets

probe timeout

probe type

show ip dhcp pool

probe packets

Overview Use this command to specify the number of packets sent for each lease probe. Lease probing is configured on a per-DHCP pool basis. When set to 0 probing is effectively disabled.

The **no** variant of this command sets the number of probe packets sent to the default of 5.

Syntax

```
probe packets <0-10>
no probe packets
```

Parameter	Description
<0-10>	The number of probe packets sent.

Default The default is 5.

Mode DHCP Pool Configuration

Examples To set the number of probe packets to 2 for pool `P2`, use the commands:

```
awplus# configure terminal
awplus(config)# ip dhcp pool P2
awplus(dhcp-config)# probe packets 2
```

To set the number of probe packets to the default 5 for pool `P2`, use the commands:

```
awplus# configure terminal
awplus(config)# ip dhcp pool P2
awplus(dhcp-config)# no probe packets
```

Related Commands

probe enable

probe timeout

probe type

show ip dhcp pool

probe timeout

Overview Use this command to set the timeout value in milliseconds that the server waits for a response after each probe packet is sent. Lease probing is configured on a per-DHCP pool basis.

The **no** variant of this command sets the probe timeout value to the default setting, 200 milliseconds.

Syntax

```
probe timeout <50-5000>
no probe timeout
```

Parameter	Description
<50-5000>	Timeout interval in milliseconds.

Default The default timeout interval is 200 milliseconds.

Mode DHCP Pool Configuration

Examples To set the probe timeout value to 500 milliseconds for pool `P2`, use the commands:

```
awplus# configure terminal
awplus(config)# ip dhcp pool P2
awplus(dhcp-config)# probe timeout 500
```

To set the probe timeout value for pool `P2` to the default, 200 milliseconds, use the commands:

```
awplus# configure terminal
awplus(config)# ip dhcp pool P2
awplus(dhcp-config)# no probe timeout
```

Related Commands

probe enable

probe packets

probe type

show ip dhcp pool

probe type

Overview Use this command to set the probe type for a DHCP pool. The probe type specifies how the DHCP server checks whether an IP address is being used by other hosts, referred to as lease probing. If **arp** is specified, the server sends an ARP request to determine if an address is in use. If **ping** is specified, the server will send an ICMP Echo Request (ping).

The **no** variant of this command sets the probe type to the default setting, ping.

Syntax

```
probe type {arp|ping}
no probe type
```

Parameter	Description
`arp`	Probe using ARP.
`ping`	Probe using ping.

Default The default probe type is ping.

Mode DHCP Pool Configuration

Examples To set the probe type to `arp` for the pool `P2`, use the commands:

```
awplus# configure terminal
awplus(config)# ip dhcp pool P2
awplus(dhcp-config)# probe type arp
```

To set the probe type for the pool `P2` to the default, `ping`, use the commands:

```
awplus# configure terminal
awplus(config)# ip dhcp pool P2
awplus(dhcp-config)# no probe type
```

Related Commands

ip dhcp pool

probe enable

probe packets

probe timeout

show ip dhcp pool

range

Overview This command adds an address range to the DHCP address pool you are configuring. The DHCP server responds to client requests received from the pool's network. It assigns an IP addresses within the specified range. The IP address range must lie within the network. You can add multiple address ranges and individual IP addresses for a DHCP pool by using this command multiple times.

The **no** variant of this command removes an address range from the DHCP pool. Use the **no range all** command to remove all address ranges from the DHCP pool.

Syntax

```
range <ip-address> [<ip-address>]
no range <ip-address> [<ip-address>]
no range all
```

Parameter	Description
<ip-address>	IPv4 address range for DHCP clients, in dotted decimal notation. The first IP address is the low end of the range, the second IP address is the high end. Specify only one IP address to add an individual IP address to the address pool.

Mode DHCP Configuration

Examples To add an address range of `192.0.2.5` to `192.0.2.16` to the pool `Nerv_Office`, use the command:

```
awplus# configure terminal
awplus(config)# ip dhcp pool Nerv_Office
awplus(dhcp-config)# range 192.0.2.5 192.0.2.16
```

To add the individual IP address `192.0.2.2` to a pool, use the command:

```
awplus(dhcp-config)# range 192.0.2.2
```

To remove all address ranges from a pool, use the command:

```
awplus(dhcp-config)# no range all
```

Related Commands

ip dhcp pool

service dhcp-server

show ip dhcp pool

route

Overview This command allows the DHCP server to provide static routes to clients.

Syntax

```
route A.B.C.D/M A.B.C.D {both|opt249|rfc3442}
```

Parameter	Description
`A.B.C.D/M`	Subnet for the route
`A.B.C.D`	Next hop for the route
`both`	opt249 and rft3442
`opt249`	Classless static route option for DHCP
`rfc3442`	Classless static route option for DHCP

Mode DHCP Configuration

Examples To distribute static routes for route `0.0.0.0/0` whose next hop is `192.16.1.1` to clients using both `opt249` and `rfc3442`, use the command:

```
awplus# configure terminal
awplus(config)# ip dhcp pool pubic
awplus(dhcp-config)# route 0.0.0.0/0 192.16.1.1 both
```

Related Commands ip dhcp pool

service dhcp-relay

Overview This command enables the DHCP Relay Agent on the device. However, on a given IP interface, no DHCP forwarding takes place until at least one DHCP server is specified to forward/relay all clients' DHCP packets to.

The **no** variant of this command disables the DHCP Relay Agent on the device for all interfaces.

Syntax

```
service dhcp-relay
no service dhcp-relay
```

Mode Global Configuration

Usage A maximum number of 400 DHCP Relay Agents (one per interface) can be configured on the device. Once this limit has been reached, any further attempts to configure DHCP Relay Agents will not be successful.

Default The DHCP-relay service is enabled by default.

Examples To enable the DHCP relay global function, use the commands:

```
awplus# configure terminal
awplus(config)# service dhcp-relay
```

To disable the DHCP relay global function, use the commands:

```
awplus# configure terminal
awplus(config)# no service dhcp-relay
```

Related Commands

ip dhcp-relay agent-option

ip dhcp-relay agent-option checking

ip dhcp-relay information policy

ip dhcp-relay maxhops

ip dhcp-relay server-address

service dhcp-server

Overview This command enables the DHCP server on your device. The server then listens for DHCP requests on all IP interfaces. It will not run if there are no IP interfaces configured.

The **no** variant of this command disables the DHCP server.

Syntax

```
service dhcp-server
no service dhcp-server
```

Mode Global Configuration

Example To enable the DHCP server, use the commands:

```
awplus# configure terminal
awplus(config)# service dhcp-server
```

Related Commands

ip dhcp pool

show ip dhcp server summary

subnet-mask

show counter dhcp-client

Overview This command shows counters for the DHCP client on your device.

For information on filtering and saving command output, see the "Getting Started with AlliedWare Plus" Feature Overview and Configuration Guide.

Syntax

```
show counter dhcp-client
```

Mode User Exec and Privileged Exec

Example To display the message counters for the DHCP client on your device, use the command:

```
awplus# show counter dhcp-client
```

Output Figure 48-1: Example output from the **show counter dhcp-client** command

```
show counter dhcp-client

DHCPDISCOVER out      ......... 10
DHCPREQUEST out       ......... 34
DHCPDECLINE out       ......... 4
DHCPRELEASE out       ......... 0
DHCPOFFER in          ......... 22
DHCPACK in            ......... 18
DHCPNAK in            ......... 0
```

Table 1: Parameters in the output of the **show counter dhcp-client** command

Parameter	Description
DHCPDISCOVER out	The number of DHCP Discover messages sent by the client.
DHCPREQUEST out	The number of DHCP Request messages sent by the client.
DHCPDECLINE out	The number of DHCP Decline messages sent by the client.
DHCPRELEASE out	The number of DHCP Release messages sent by the client.
DHCPOFFER in	The number of DHCP Offer messages received by the client.
DHCPACK in	The number of DHCP Acknowledgement messages received by the client.
DHCPNAK in	The number of DHCP Negative Acknowledgement messages received by the client.

Related Commands ip address dhcp

show counter dhcp-relay

Overview This command shows counters for the DHCP Relay Agent on your device.

For information on filtering and saving command output, see the "Getting Started with AlliedWare Plus" Feature Overview and Configuration Guide.

Syntax

```
show counter dhcp-relay
```

Syntax (VRF-lite)

```
show counter dhcp-relay [vrf <vrf-name>|global]
```

Parameter	Description
`vrf`	Display the output for a VRF instance
<vrf-name>	The name of the specific VRF instance.
`global`	Display the output for the Global VRF instance

Mode User Exec and Privileged Exec

Examples To display counters for the DHCP Relay Agent on your device, use the following command:

```
awplus# show counter dhcp-relay
```

Output Figure 48-2: Example output from the **show counter dhcp-relay** command

```
awplus#show counter dhcp-relay

DHCP relay counters
Requests In              ......... 4
Replies In               ......... 4
Relayed To Server        ......... 4
Relayed To Client        ......... 4
Out To Server Failed     ......... 0
Out To Client Failed     ......... 0
Invalid hlen             ......... 0
Bogus giaddr             ......... 0
Corrupt Agent Option     ......... 0
Missing Agent Option     ......... 0
Bad Circuit ID           ......... 0
Missing Circuit ID       ......... 0
Bad Remote ID            ......... 0
Missing Remote ID        ......... 0
Option Insert Failed     ......... 0
DHCPv6 Requests In       ......... 0
DHCPv6 Replies In        ......... 0
DHCPv6 Relayed to Server ......... 0
DHCPv6 Relayed to Client ......... 0
```

Output (VRF-lite)

Figure 48-3: Example output from the **show counter dhcp-relay** command for VRF instance red

```
DHCP relay counters

[VRF red]
Requests In ..................... 4
Replies In ...................... 4
Relayed To Server ............... 4
Relayed To Client ............... 4
Out To Server Failed ............ 0
Out To Client Failed ............ 0
Invalid hlen .................... 0
Bogus giaddr .................... 0
Corrupt Agent Option ............ 0
Missing Agent Option ............ 0
Bad Circuit ID .................. 0
Missing Circuit ID .............. 0
Option Insert Failed ............ 0
```

Parameter	Description
`Requests In`	The number of DHCP Request messages received from clients.
`Replies In`	The number of DHCP Reply messages received from servers.
`Relayed To Server`	The number of DHCP Request messages relayed to servers.
`Relayed To Client`	The number of DHCP Reply messages relayed to clients.
`Out To Server Failed`	The number of failures when attempting to send request messages to servers. This is an internal debugging counter.
`Out To Client Failed`	The number of failures when attempting to send reply messages to clients. This is an internal debugging counter.
`Invalid hlen`	The number of incoming messages dropped due to an invalid hlen field.
`Bogus giaddr`	The number of incoming DHCP Reply messages dropped due to the bogus giaddr field.
`Corrupt Agent Option`	The number of incoming DHCP Reply messages dropped due to a corrupt relay agent information option field. Note that Agent Option counters only increment on errors occurring if the ip dhcp-relay agent-option command is configured for an interface. Messages generating the errors are only dropped if the ip dhcp-relay agent-option checking command is configured on the interface as well as the ip dhcp-relay agent-option command.

Parameter	Description
`Missing Agent Option`	The number of incoming DHCP Reply messages dropped due to a missing relay agent information option field. Note that Agent Option counters only increment on errors occurring if the ip dhcp-relay agent-option command is configured for an interface. Messages generating the errors are only dropped if the ip dhcp-relay agent-option checking command is configured on the interface as well as the ip dhcp-relay agent-option command.
`Bad Circuit ID`	The number of incoming DHCP Reply messages dropped due to a bad circuit ID. Note that Agent Option counters only increment on errors occurring if the ip dhcp-relay agent-option command is configured for an interface. Messages generating the errors are only dropped if the ip dhcp-relay agent-option checking command is configured on the interface as well as the ip dhcp-relay agent-option command
`Missing Circuit ID`	The number of incoming DHCP Reply messages dropped due to a missing circuit ID. Note that Agent Option counters only increment on errors occurring if the ip dhcp-relay agent-option command is configured for an interface. Messages generating the errors are only dropped if the ip dhcp-relay agent-option checking command is configured on the interface as well as the ip dhcp-relay agent-option command
`Bad Remote ID`	The number of incoming DHCP Reply messages dropped due to a bad remote ID. Note that Agent Option counters only increment on errors occurring if the ip dhcp-relay agent-option command is configured for an interface. Messages generating the errors are only dropped if the ip dhcp-relay agent-option checking command is configured on the interface as well as the ip dhcp-relay agent-option command
`Missing Remote ID`	The number of incoming DHCP Reply messages dropped due to a missing remote ID. Note that Agent Option counters only increment on errors occurring if the ip dhcp-relay agent-option command is configured for an interface. Messages generating the errors are only dropped if the ip dhcp-relay agent-option checking command is configured on the interface as well as the ip dhcp-relay agent-option command

Parameter	Description
`Option Insert Failed`	The number of incoming DHCP Request messages dropped due to an error adding the DHCP Relay Agent information (option-82). This counter increments when: • the DHCP Relay Agent is set to drop packets with the DHCP Relay Agent Option 82 field already filled by another DHCP Relay Agent. This policy is set with the ip dhcp-relay information policy command. • there is a packet error that stops the DHCP Relay Agent from being able to append the packet with its DHCP Relay Agent Information Option (Option 82) field.
Note that the following parameters are only used on the Global VRF instance when DHCPv6 is running	
`DHCPv6 Requests In`	The number of incoming DHCPv6 Request messages.
`DHCPv6 Replies In`	The number of incoming DHCPv6 Reply messages.
`DHCPv6 Relayed to Server`	The number of DHCPv6 messages relayed to the server.
`DHCPv6 Relayed to Client`	The number of DHCPv6 messages relayed to the client.

show counter dhcp-server

Overview This command shows counters for the DHCP server on your device.

For information on filtering and saving command output, see the "Getting Started with AlliedWare Plus" Feature Overview and Configuration Guide.

Syntax

```
show counter dhcp-server
```

Mode User Exec and Privileged Exec

Example To display counters for the DHCP server on your device, use the command:

```
awplus# show counter dhcp-server
```

Output Figure 48-4: Example output from the **show counter dhcp-server** command

```
DHCP server counters
DHCPDISCOVER in       ......... 20
DHCPREQUEST in        ......... 12
DHCPDECLINE in        ......... 1
DHCPRELEASE in        ......... 0
DHCPINFORM in         ......... 0
DHCPOFFER out         ......... 8
DHCPACK out           ......... 4
DHCPNAK out           ......... 0
BOOTREQUEST in        ......... 0
BOOTREPLY out         ......... 0
```

Table 2: Parameters in the output of the **show counter dhcp-server** command

Parameter	Description
DHCPDISCOVER in	The number of Discover messages received by the DHCP server.
DHCPREQUEST in	The number of Request messages received by the DHCP server.
DHCPDECLINE in	The number of Decline messages received by the DHCP server.
DHCPRELEASE in	The number of Release messages received by the DHCP server.
DHCPINFORM in	The number of Inform messages received by the DHCP server.
DHCPOFFER out	The number of Offer messages sent by the DHCP server.
DHCPACK out	The number of Acknowledgement messages sent by the DHCP server.

Table 2: Parameters in the output of the **show counter dhcp-server** command

Parameter	Description
`DHCPNAK out`	The number of Negative Acknowledgement messages sent by the DHCP server. The server sends these after receiving a request that it cannot fulfil because either there are no available IP addresses in the related address pool, or the request has come from a client that doesn't fit the network setting for an address pool.
`BOOTREQUEST in`	The number of bootp messages received by the DHCP server from bootp clients.
`BOOTREPLY out`	The number of bootp messages sent by the DHCP server to bootp clients.

Related Commands

service dhcp-server

show ip dhcp binding

show ip dhcp server statistics

show ip dhcp pool

show dhcp lease

Overview This command shows details about the leases that the DHCP client has acquired from a DHCP server for interfaces on the device.

For information on filtering and saving command output, see "Controlling "show" Command Output" in the "Getting Started with AlliedWare_Plus" Feature Overview and Configuration Guide.

Syntax

```
show dhcp lease [<interface>]
```

Parameter	Description
<interface>	Interface name to display DHCP lease details for.

Mode User Exec and Privileged Exec

Example To show the current lease expiry times for all interfaces, use the command:

```
awplus# show dhcp lease
```

To show the current lease for vlan1, use the command:

```
awplus# show dhcp lease vlan1
```

Output Figure 48-5: Example output from the **show dhcp lease** command

```
Interface vlan1
---------------------------------------------------------------
IP Address:                   192.168.22.4
Expires:                      13 Mar 2017 20:10:19
Renew:                        13 Mar 2017 18:37:06
Rebind:                       13 Mar 2017 19:49:29
Server:
Options:
  subnet-mask                 255.255.255.0
  routers                     19.18.2.100,12.16.2.17
  dhcp-lease-time             3600
  dhcp-message-type           5
  domain-name-servers         192.168.100.50,19.88.200.33
  dhcp-server-identifier      192.168.22.1
  domain-name                 alliedtelesis.com

Interface vlan2
---------------------------------------------------------------
IP Address:                   100.8.16.4
Expires:                      13 Mar 2017 20:15:39
Renew:                        13 Mar 2017 18:42:25
Rebind:                       13 Mar 2017 19:54:46
Server:
Options:
  subnet-mask                 255.255.0.0
  routers                     10.58.1.51
  dhcp-lease-time             1000
  dhcp-message-type           5
  dhcp-server-identifier      100.8.16.1
```

Related Commands ip address dhcp

show ip dhcp binding

Overview This command shows the lease bindings that the DHCP server has allocated clients.

For information on filtering and saving command output, see the "Getting Started with AlliedWare Plus" Feature Overview and Configuration Guide.

Syntax

```
show ip dhcp binding [<ip-address>|<address-pool>]
```

Parameter	Description
<ip-address>	IPv4 address of a leased IP address, in dotted decimal notation. This displays the lease information for the specified IP address.
<address-pool>	Name of an address pool. This displays the lease information for all clients within the address pool.

Mode User Exec and Privileged Exec

Examples To display all leases for every client in all address pools, use the command:

```
awplus# show ip dhcp binding
```

To display the details for the leased IP address `172.16.2.16`, use the command:

```
awplus# show ip dhcp binding 172.16.2.16
```

To display the leases from the address pool `MyPool`, use the command:

```
awplus# show ip dhcp binding MyPool
```

Output Figure 48-6: Example output from the **show ip dhcp binding** command

```
Pool 30_2_network Network 172.16.2.0/24
DHCP Client Entries
IP Address      ClientId                  Type           Expiry
-------------------------------------------------------------------------------
172.16.2.100    0050.fc82.9ede            Dynamic        21 Sep 2007 19:02:58
172.16.2.101    000e.a6ae.7c14            Static         Infinite
172.16.2.102    000e.a6ae.7c4c            Static         Infinite
172.16.2.103    000e.a69a.ac91            Static         Infinite
172.16.2.104    00e0.189d.5e41            Static         Infinite
172.16.2.150    00e0.2b04.5800            Static         Infinite
172.16.2.167    4444.4400.35c3            Dynamic        21 Sep 2007 14:58:41
```

Related Commands

clear ip dhcp binding

ip dhcp pool

lease

range

service dhcp-server

show ip dhcp pool

show ip dhcp pool

Overview This command displays the configuration details and system usage of the DHCP address pools configured on the device.

For information on filtering and saving command output, see the "Getting Started with AlliedWare Plus" Feature Overview and Configuration Guide.

Syntax

```
show ip dhcp pool [<address-pool>]
```

Parameter	Description
<address-pool>	Name of a specific address pool. This displays the configuration of the specified address pool only.

Mode User Exec and Privileged Exec

Example

```
awplus# show ip dhcp pool
```

Output Figure 48-7: Example output from the **show ip dhcp pool** command

```
Pool p1 :
  network: 192.168.1.0/24
  address ranges:
    addr: 192.168.1.10 to 192.168.1.18
  static host addresses:
    addr: 192.168.1.12     MAC addr: 1111.2222.3333
  lease <days:hours:minutes:seconds> <1:0:0:0>
  subnet mask: 255.255.255.0 (pool's network mask)
  Probe:                        Default Values
    Status:       Enabled       [Enabled]
    Type:         ARP           [Ping]
    Packets:      2             [5]
    Timeout:      200 msecs     [200]
  Dynamic addresses:
    Total:        8
    Leased:       2
    Utilization:  25.0 %
  Static host addresses:
    Total:        1
    Leased:       1
```

Output Figure 48-8: Example output from the **show ip dhcp pool** command with IP address 192.168.1.12 assigned to a VLAN interface on the device:

```
Pool p1 :
  network: 192.168.1.0/24
  address ranges:
    addr: 192.168.1.10 to 192.168.1.18
            (interface addr 192.168.1.12 excluded)
            (static host addr 192.168.1.12 excluded)
  static host addresses:
    addr: 192.168.1.12     MAC addr: 1111.2222.3333
            (= interface addr, so excluded)
  lease <days:hours:minutes:seconds> <1:0:0:0>
  subnet mask: 255.255.255.0 (pool's network mask)
  Probe:                        Default Values
    Status:       Enabled       [Enabled]
    Type:         ARP           [Ping]
    Packets:      2             [5]
    Timeout:      200 msecs     [200]
  Dynamic addresses:
    Total:        8
    Leased:       2
    Utilization:  25.0 %
  Static host addresses:
    Total:        1
    Leased:       1
```

Table 3: Parameters in the output of the **show ip dhcp pool** command

Parameter	Description
`Pool`	Name of the pool.
`network`	Subnet and mask length of the pool.
`address ranges`	Individual IP addresses and address ranges configured for the pool. The DHCP server can offer clients an IP address from within the specified ranges only. Any of these addresses that match an interface address on the device, or a static host address configured in the pool, will be automatically excluded from the range, and a message to this effect will appear beneath the range entry.
`static host addresses`	The static host addresses configured on the pool. Each IP address is permanently assigned to the client with the matching MAC address. Any of these addresses that match an interface address on the device will be automatically excluded, and a message to this effect will appear beneath the static host entry.

Table 3: Parameters in the output of the **show ip dhcp pool** command (cont.)

Parameter	Description
`lease <days:hours:minutes>`	The lease duration for address allocated by this pool.
`domain`	The domain name sent by the pool to clients. This is the domain name that the client should use when resolving host names using DNS.
`subnet mask`	The subnet mask sent by the pool to clients.
Probe - Status	Whether lease probing is enabled or disabled.
Probe - Type	The lease probe type configured. Either ping or ARP.
Probe - Packets	The number of packets sent for each lease probe in the range 0 to 10.
Probe - Timeout	The timeout value in milliseconds to wait for a response after each probe packet is sent. In the range 50 to 5000.
`dns servers`	The DNS server addresses sent to by the pool to clients.
`default-router(s)`	The default router addresses sent by the pool to clients.
`user-defined options`	The list of user-defined options sent by the pool to clients.
`Dynamic addresses-Total`	The total number of IP addresses that have been configured in the pool for dynamic allocation to DHCP clients.
`Dynamic addresses-Leased`	The number of IP addresses in the pool that have been dynamically allocated (leased) to DHCP clients.
`Dynamic addresses - Utilization`	The percentage of IP addresses in the pool that are currently dynamically allocated to clients.
`Static host addresses-Total`	The number of static IP addresses configured in the pool for specific DHCP client hosts.
`Static host addresses - Leased`	The number of static IP addresses assigned to specific DHCP client hosts.

Related Commands

ip dhcp pool

probe enable

probe packets

probe timeout

probe type

range

service dhcp-server

subnet-mask

show ip dhcp-relay

Overview This command shows the configuration of the DHCP Relay Agent on each interface.

For information on filtering and saving command output, see the "Getting Started with AlliedWare Plus" Feature Overview and Configuration Guide.

Syntax
```
show ip dhcp-relay [interface <interface-name>]
```

Syntax (VRF-lite)
```
show ip dhcp-relay [vrf <name>|global] [interface
<interface-name>]
```

Parameter	Description
<interface-name>	Name of a specific interface. This displays the DHCP configuration for the specified interface only.
`vrf`	Apply this command to a VRF instance.
<vrf-name>	The name of the VRF instance.
`global`	The Global VRF instance.

Mode User Exec and Privileged Exec

Example To display the DHCP Relay Agent's configuration on the interface `vlan100`, use the command:

```
awplus# show ip dhcp-relay interface vlan100
```

Output Figure 48-9: Example output from the **show ip dhcp-relay** command

```
DHCP Relay Service is enabled

vlan100 is up, line protocol is up
Maximum hop count is 10
Insertion of Relay Agent Option is disabled
Checking of Relay Agent Option is disabled
The Remote Id string for Relay Agent Option is 0000.cd28.074c
Relay information policy is to append new relay agent
information
List of servers :   192.168.1.200
```

Output (VRF-lite)

Figure 48-10: Example output from the **show ip dhcp-relay** command applied for VRF instance red

```
DHCP Relay Service is enabled

[VRF: red]
vlan2 is up, line protocol is up
Maximum hop count is 10
Maximum DHCP message length is 1400
Insertion of Relay Agent Option is enabled
Checking of Relay Agent Option is disabled
The Remote Id string for Relay Agent Option is 0000.cd28.074c
Relay Information policy is to replace existing relay agent
information
List of servers :   192.168.1.3
```

Related Commands

ip dhcp-relay agent-option

ip dhcp-relay agent-option checking

ip dhcp-relay information policy

ip dhcp-relay maxhops

ip dhcp-relay server-address

Command changes

Version 5.4.6-2.1: VRF-lite support added.

show ip dhcp server statistics

Overview This command shows statistics related to the DHCP server.

You can display the server counters using the show counter dhcp-server command as well as with this command.

For information on filtering and saving command output, see the "Getting Started with AlliedWare Plus" Feature Overview and Configuration Guide.

Syntax

```
show ip dhcp server statistics
```

Mode User Exec and Privileged Exec

Example To display the server statistics, use the command:

```
awplus# show ip dhcp server statistics
```

Output Figure 48-11: Example output from the **show ip dhcp server statistics** command

```
DHCP server counters
DHCPDISCOVER in       ......... 20
DHCPREQUEST in        ......... 12
DHCPDECLINE in        ......... 1
DHCPRELEASE in        ......... 0
DHCPINFORM in         ......... 0
DHCPOFFER out         ......... 8
DHCPACK out           ......... 4
DHCPNAK out           ......... 0
BOOTREQUEST in        ......... 0
BOOTREPLY out         ......... 0
DHCPLEASEQUERY in       ....... 0
DHCPLEASEUNKNOWN out    ....... 0
DHCPLEASEACTIVE out     ....... 0
DHCPLEASEUNASSIGNED out ....... 0
```

Table 4: Parameters in the output of the **show ip dhcp server statistics** command

Parameter	Description
DHCPDISCOVER in	The number of Discover messages received by the DHCP server.
DHCPREQUEST in	The number of Request messages received by the DHCP server.
DHCPDECLINE in	The number of Decline messages received by the DHCP server.

Table 4: Parameters in the output of the **show ip dhcp server statistics** command (cont.)

Parameter	Description
DHCPRELEASE in	The number of Release messages received by the DHCP server.
DHCPINFORM in	The number of Inform messages received by the DHCP server.
DHCPOFFER out	The number of Offer messages sent by the DHCP server.
DHCPACK out	The number of Acknowledgement messages sent by the DHCP server.
DHCPNAK out	The number of Negative Acknowledgement messages sent by the DHCP server. The server sends these after receiving a request that it cannot fulfil because either there are no available IP addresses in the related address pool, or the request has come from a client that doesn't fit the network setting for an address pool.
BOOTREQUEST in	The number of bootp messages received by the DHCP server from bootp clients.
BOOTREPLY out	The number of bootp messages sent by the DHCP server to bootp clients.
DHCPLEASEQUERY in	The number of Lease Query messages received by the DHCP server from DHCP Relay Agents.
DHCPLEASEUNKNOWN out	The number of Lease Unknown messages sent by the DHCP server to DHCP Relay Agents.
DHCPLEASEACTIVE out	The number of Lease Active messages sent by the DHCP server to DHCP Relay Agents.
DHCPLEASEUNASSIGNED out	The number of Lease Unassigned messages sent by the DHCP server to DHCP Relay Agents.

Related Commands

show counter dhcp-server

service dhcp-server

show ip dhcp binding

show ip dhcp pool

show ip dhcp server summary

Overview This command shows the current configuration of the DHCP server. This includes:

- whether the DHCP server is enabled
- whether the DHCP server is configured to ignore BOOTP requests
- whether the DHCP server is configured to support DHCP lease queries
- the details of any user-defined options
- a list of the names of all DHCP address pools currently configured

This show command does not include any configuration details of the address pools. You can display these using the show ip dhcp pool command.

For information on filtering and saving command output, see the "Getting Started with AlliedWare Plus" Feature Overview and Configuration Guide.

Syntax

```
show ip dhcp server summary
```

Mode User Exec and Privileged Exec

Example To display the current configuration of the DHCP server, use the command:

```
awplus# show ip dhcp server summary
```

Output Figure 48-12: Example output from the **show ip dhcp server summary** command

```
DHCP Server service is disabled
BOOTP ignore is disabled
DHCP leasequery support is disabled
Pool list: p2
```

Related Commands

ip dhcp leasequery enable

ip dhcp pool

service dhcp-server

subnet-mask

Overview This command sets the subnet mask option for a DHCP address pool you are configuring. Use this command to specify the client's subnet mask as defined in RFC 950. This sets the subnet details using the pre-defined option 1. Note that if you create a user-defined option 1 using the option command, then you will override any settings created with this command. If you do not specify a subnet mask using this command, then the pool's network mask (specified using the next-server command) is applied.

The **no** variant of this command removes a subnet mask option from a DHCP pool. The pool reverts to using the pool's network mask.

Syntax

```
subnet-mask <mask>
no subnet-mask
```

Parameter	Description
<mask>	Valid IPv4 subnet mask, in dotted decimal notation.

Mode DHCP Configuration

Examples To set the subnet mask option to `255.255.255.0` for DHCP pool `P2`, use the commands:

```
awplus# configure terminal
awplus(config)# ip dhcp pool P2
awplus(dhcp-config)# subnet-mask 255.255.255.0
```

To remove the subnet mask option from DHCP pool `P2`, use the commands:

```
awplus# configure terminal
awplus(config)# ip dhcp pool P2
awplus(dhcp-config)# no subnet-mask
```

Related Commands

default-router

dns-server

domain-name

next-server

option

service dhcp-server

show ip dhcp pool

49 DHCP for IPv6 (DHCPv6) Commands

Introduction

Overview

This chapter provides an alphabetical reference for commands used to configure DHCPv6. For more information, see the DHCPv6 Feature Overview and Configuration Guide.

DHCPv6 is a network protocol used to configure IPv6 hosts with IPv6 addresses and IPv6 prefixes for an IPv6 network. DHCPv6 is used instead of SLAAC (Stateless Address Autoconfiguration) at sites where centralized management of IPv6 hosts is needed. IPv6 routers require automatic configuration of IPv6 addresses and IPv6 prefixes.

DHCPv6 Prefix Delegation provides automatic configuration of IPv6 addresses and IPv6 prefixes.

Note that DHCPv6 client does not support tunnel interface.

For information on filtering and saving command output, see the "Getting Started with AlliedWare Plus" Feature Overview and Configuration Guide.

NOTE: *The IPv6 addresses shown use the address space 2001:0db8::/32, defined in RFC 3849 for documentation purposes. These addresses should not be used for practical networks (other than for testing purposes) nor should they appear on any public network.*

Command List

- "address prefix" on page 2365
- "address range" on page 2367
- "clear counter ipv6 dhcp-client" on page 2369
- "clear counter ipv6 dhcp-server" on page 2370
- "clear ipv6 dhcp binding" on page 2371
- "clear ipv6 dhcp client" on page 2373
- "dns-server (DHCPv6)" on page 2374
- "domain-name (DHCPv6)" on page 2376

- "ipv6 address (DHCPv6 PD)" on page 2377
- "ipv6 address dhcp" on page 2380
- "ipv6 dhcp client pd" on page 2382
- "ipv6 dhcp option" on page 2384
- "ipv6 dhcp pool" on page 2386
- "ipv6 dhcp server" on page 2388
- "ipv6 local pool" on page 2389
- "ipv6 nd prefix (DHCPv6)" on page 2391
- "link-address" on page 2393
- "option (DHCPv6)" on page 2395
- "prefix-delegation pool" on page 2397
- "show counter ipv6 dhcp-client" on page 2399
- "show counter ipv6 dhcp-server" on page 2401
- "show ipv6 dhcp" on page 2403
- "show ipv6 dhcp binding" on page 2404
- "show ipv6 dhcp interface" on page 2407
- "show ipv6 dhcp pool" on page 2409
- "sntp-address" on page 2411

address prefix

Overview Use this command in DHCPv6 Configuration mode to specify an address prefix for address assignment with DHCPv6 server pool configuration.

Use the **no** variant of this command to remove the address prefix from the DHCPv6 server pool.

Syntax

```
address prefix <ipv6-prefix/prefix-length> [lifetime
{<valid-time>|infinite} {<preferred-time>|infinite}]
```

```
no address prefix <ipv6-prefix/prefix-length>
```

Parameter	Description
<ipv6-prefix/prefix-length>	Specify an IPv6 prefix and prefix length. The prefix length indicates the length of the IPv6 prefix assigned to the pool. The IPv6 address uses the format X:X::X:X/Prefix-Length. The prefix-length is usually set between 0 and 64.
`lifetime`	Specify a time period for the hosts to remember router advertisements (RAs). If you specify the optional lifetime parameter with this command then you must also specify a *valid-time* and a *preferred-time* value. See the Usage notes below this parameter table for a description of preferred and valid lifetimes and how these determine deprecated or invalid IPv6 addresses upon expiry.
<valid-time>	Specify a valid lifetime in seconds in the range <5-315360000>. The default valid lifetime is 2592000 seconds.
`infinite`	Specify an infinite valid lifetime or an infinite preferred lifetime, or both, when using this keyword.
<preferred-time>	Specify a preferred lifetime in seconds in the range <5-315360000>. The default preferred lifetime is 604800 seconds.

Mode DHCPv6 Configuration

Default The default valid lifetime is 2592000 seconds and the default preferred lifetime is 604800 seconds.

Usage This command creates a pool of prefixes from which addresses are assigned to clients on request, and allocates a network prefix from which the DHCPv6 Server leases addresses. This command is an alternative to using a range set using the address range command.

The DHCPv6 Server selects an IPv6 address from the range available allocated by the IPv6 prefix, randomly generating the suffix of the IPv6 address, with the specified preferred and valid lifetime leases. Leased IPv6 address are found in the

DHCPv6 Server REPLY packet, which is located within the IANA (Identity Association for Non-temporary Addresses) IA address field in the **REPLY** message.

Preferred IPv6 addresses or prefixes are available to interfaces for unrestricted use and are deprecated when the preferred timer expires.

Deprecated IPv6 addresses and prefixes are available for use and are discouraged but not forbidden. A deprecated address or prefix should not be used as a source address or prefix, but packets sent from deprecated addresses or prefixes are delivered as expected.

An IPv6 address or prefix becomes invalid and is not available to an interface when the valid lifetime timer expires. Invalid addresses or prefixes should not appear as the source or destination for a packet.

Examples To add IPv6 address prefix `2001:0db8:1::/48` for DHCPv6 server pool configuration, use the following commands:

```
awplus# configure terminal
awplus(config)# ipv6 dhcp pool pool1
awplus(config-dhcp6)# address prefix 2001:0db8:1::/48
```

To remove a configured IPv6 address prefix for DHCPv6 server pool configuration, use the following commands:

```
awplus# configure terminal
awplus(config)# ipv6 dhcp pool pool1
awplus(config-dhcp6)# no address prefix 2001:0db8:1::/48
```

Related Commands

address range

ipv6 dhcp pool

Validation Commands

show ipv6 dhcp binding

show ipv6 dhcp pool

address range

Overview Use this command in DHCPv6 Configuration mode to specify an address range for address assignment with DHCPv6 server pool configuration.

Use the **no** variant of this command to remove an address range from the DHCPv6 server pool.

Syntax

```
address range <first-ipv6-address>
<last-ipv6-address>[lifetime {<valid-time>|infinite}
{<preferred-time>|infinite}]
```

```
no address range <first-ipv6-address> <last-ipv6-address>
```

Parameter	Description
<first-ipv6-address>	Specify the first IPv6 address of the IPv6 address range, in hexadecimal notation in the format X:X::X:X.
<last-ipv6-address>	Specify the last IPv6 address of the IPv6 address range, in hexadecimal notation in the format X:X::X:X.
lifetime	Optional. Specify a time period for the hosts to remember router advertisements (RAs). If you specify this parameter then you must also specify a *valid-time* and a *preferred-time* value. See the Usage notes below this parameter table for a description of preferred and valid lifetimes and how these determine deprecated or invalid IPv6 addresses upon expiry.
<valid-time>	Specify a valid lifetime in seconds in the range <5-31536000>. The default valid lifetime is 2592000 seconds.
infinite	Specify an infinite valid lifetime or an infinite preferred lifetime, or both, when using this keyword.
<preferred-time>	Specify a preferred lifetime in seconds in the range <5-31536000>. The default preferred lifetime is 604800 seconds.

Default The default valid lifetime is 2592000 seconds and the default preferred lifetime is 604800 seconds.

Mode DHCPv6 Configuration

Usage Preferred IPv6 addresses or prefixes are available to interfaces for unrestricted use and are deprecated when the preferred timer expires.

Deprecated IPv6 addresses and prefixes are available for use and are discouraged but not forbidden. A deprecated address or prefix should not be used as a source address or prefix, but packets sent from deprecated addresses or prefixes are delivered as expected.

An IPv6 address or prefix becomes invalid and is not available to an interface when the valid lifetime timer expires. Invalid addresses or prefixes should not appear as the source or destination for a packet.

Examples To add the IPv6 address range `2001:0db8:1::1` to `2001:0db8:1fff::1` for DHCPv6 server pool configuration, use the following commands:

```
awplus# configure terminal
awplus(config)# ipv6 dhcp pool pool1
awplus(config-dhcp6)# address range 2001:0db8:1::1
2001:0db8:1fff::1
```

To remove a configured IPv6 address range for DHCPv6 server pool configuration, use the following commands:

```
awplus# configure terminal
awplus(config)# ipv6 dhcp pool pool1
awplus(config-dhcp6)# no address range
```

Related Commands
address prefix
ipv6 dhcp pool

Validation Commands
show ipv6 dhcp binding
show ipv6 dhcp pool

clear counter ipv6 dhcp-client

Overview Use this command in Privileged Exec mode to clear DHCPv6 client counters.

Syntax

```
clear counter ipv6 dhcp-client
```

Mode Privileged Exec

Example To clear DHCPv6 client counters, use the following command:

```
awplus# clear counter ipv6 dhcp-client
```

Related Commands show counter ipv6 dhcp-client

clear counter ipv6 dhcp-server

Overview Use this command in Privileged Exec mode to clear DHCPv6 server counters.

Syntax

```
clear counter ipv6 dhcp-server
```

Mode Privileged Exec

Example To clear DHCPv6 server counters, use the following command:

```
awplus# clear counter ipv6 dhcp-server
```

Related Commands show counter ipv6 dhcp-server

clear ipv6 dhcp binding

Overview Use this command in Privileged Exec mode to clear either a specific lease binding or the lease bindings as specified by the command parameters. The command will only take effect on dynamically allocated bindings, not statically configured bindings. This command clears binding entries on the DHCPv6 server binding table.

Syntax `clear ipv6 dhcp binding {ipv6 <prefix>|duid <DUID>|all|pool <name>}`

Parameter	Description
`ipv6 <prefix>`	Optional. Specify the IPv6 prefix of the DHCPv6 client, in hexadecimal notation in the format `X:X::X:X`.
`duid <DUID>`	Specify the DUID (DHCPv6 unique ID) of the DHCPv6 client.
`all`	All DHCPv6 bindings.
`pool <name>`	Description used to identify DHCPv6 server address pool. Valid characters are any printable character. If the name contains spaces then you must enclose these in "quotation marks".

Mode Privileged Exec

Usage A specific binding may be deleted by **ipv6** address or **duid** address, or several bindings may be deleted at once using **all** or **pool**.

Note that if you specify to clear the **ipv6** or **duid** address of what is actually a static DHCPv6 binding, an error message is displayed. If **all** or **pool** are specified and one or more static DHCPv6 bindings exist within those addresses, any dynamic entries within those addresses are cleared but any static entries are not cleared.

The clear ipv6 dhcp binding command is used as a server function. A binding table entry on the DHCPv6 server is automatically:

- Created whenever a prefix is delegated to a client from the configuration pool.
- Updated when the client renews, rebinds, or confirms the prefix delegation.
- Deleted when the client releases all the prefixes in the binding, all prefix lifetimes have expired, or when a user runs the clear ipv6 dhcp binding command.

If the **clear ipv6 dhcp binding** command is used with the optional IPv6 address parameter, only the binding for the specified client is deleted. If the **clear ipv6 dhcp binding** command is used without the optional IPv6 address parameter, then all automatic client bindings are deleted from the DHCPv6 bindings table.

Example To clear all dynamic DHCPv6 server binding entries, use the command:

```
awplus# clear ipv6 dhcp binding all
```

Output Figure 49-1: Example output from the **clear ipv6 dhcp binding all** command

```
awplus#clear ipv6 dhcp binding all
% Deleted 1 entries
```

Related Commands show ipv6 dhcp binding

clear ipv6 dhcp client

Overview Use this command in Privileged Exec mode to restart a DHCPv6 client on an interface.

Syntax

```
clear ipv6 dhcp client <interface>
```

Parameter	Description
<interface>	Specify the interface name to restart a DHCPv6 client on.

Mode Privileged Exec

Example To restart a DHCPv6 client on interface vlan1, use the following command:

```
awplus# clear ipv6 dhcp client vlan1
```

Related Commands show ipv6 dhcp binding

dns-server (DHCPv6)

Overview Use this command to add a Domain Name System (DNS) server to the DHCPv6 address pool you are configuring. You can use this command multiple times to create a list of DNS name servers available to the client. This sets the DNS server details using the pre-defined option 6. Note that if you add a user-defined option 6 using the option (DHCPv6) command, then you will override any settings created with this command.

Use the **no** variant of this command to remove either the specified DNS server or all DNS servers from the DHCPv6 pool.

Syntax

```
dns-server <ipv6-address>
no dns-server [<ipv6-address>]
```

Parameter	Description
<ipv6-address>	Specify an IPv6 address of the DNS server, in hexadecimal notation in the format X:X::X:X. This parameter is required when adding a DNS server to the DHCPv6 address pool. All DNS servers are removed from the DHCPv6 pool if you enter the no dns-server command without this parameter.

Mode DHCPv6 Configuration

Examples To add the DNS server with the assigned IPv6 address 2001:0db8:3000:3000::32 to the DHCPv6 server pool named P2, use the following commands:

```
awplus# configure terminal
awplus(config)# ipv6 dhcp pool P2
awplus(dhcpv6-config)# dns-server 2001:0db8:3000:3000::32
```

To remove the DNS server with the assigned IPv6 address 2001:0db8:3000:3000::32 from the DHCPv6 server pool named P2, use the following commands:

```
awplus# configure terminal
awplus(config)# ipv6 dhcp pool P2
awplus(dhcpv6-config)# no dns-server 2001:0db8:3000:3000::32
```

To remove all DNS servers from the DHCPv6 server pool named P2, use the following commands:

```
awplus# configure terminal
awplus(config)# ipv6 dhcp pool P2
awplus(dhcpv6-config)# no dns-server
```

Related Commands

ipv6 dhcp pool

option (DHCPv6)

show ipv6 dhcp pool

domain-name (DHCPv6)

Overview Use this command in DHCPv6 Configuration mode to add a domain name to the DHCPv6 server address pool you are configuring.

Use the **no** variant of this command to remove a domain name from the address pool.

Syntax

```
domain-name <domain-name>
no domain-name
```

Parameter	Description
<domain-name>	Specify the domain name you wish to assign the DHCPv6 server address pool. Valid characters are printable characters. If the name contains spaces then you must enclose it in "quotation marks".

Mode DHCPv6 Configuration

Usage This command specifies the domain name that a client should use when resolving host names using the Domain Name System, and sets the domain name details using the pre- defined option 15. Note that if you add a user-defined option 15 using the option (DHCPv6) command, then you will override any settings created with this command.

Examples To add the domain name `Engineering` to DHCPv6 server pool `P2`, use the commands:

```
awplus# configure terminal
awplus(config)# ipv6 dhcp pool P2
awplus(dhcpv6-config)# domain-name Engineering
```

To remove the domain name `Engineering` from DHCPv6 server pool `P2`, use the commands:

```
awplus# configure terminal
awplus(config)# ipv6 dhcp pool P2
awplus(dhcpv6-config)# no domain-name Engineering
```

Related Commands

dns-server (DHCPv6)

option (DHCPv6)

show ipv6 dhcp pool

ipv6 address (DHCPv6 PD)

Overview Use this command in Interface Configuration mode for a VLAN interface to append an IPv6 address suffix to the IPv6 prefix provided by a DHCPv6 Prefix Delegation (PD) server.

Use the **no** variant of this command to remove the IPv6 address assigned and disable IPv6. Note that if no global addresses are left after removing the IPv6 address then IPv6 is disabled.

Syntax

```
ipv6 address [<ipv6-prefix-name>] <ipv6-addr/prefix-length>
[eui64]
```

```
no ipv6 address [<ipv6-prefix-name>] <ipv6-addr/prefix-length>
[eui64]
```

Parameter	Description
<ipv6-prefix-name>	The IPv6 prefix name advertised on the router advertisement message sent from the device. The IPv6 prefix name is delegated from the DHCPv6 Server configured for DHCPv6 Prefix-Delegation.
<ipv6-addr/prefix-length>	Specifies the IPv6 address to be set, for example ::1/64. The IPv6 address uses the format X:X::X:X/Prefix-Length. The prefix-length is usually set between 0 and 64.
[eui64]	EUI-64 is a method of automatically deriving the lower 64 bits of an IPv6 address, based on the switch's MAC address.

Mode Interface Configuration for a VLAN interface or Interface Configuration for a PPP interface.

Usage When specifying the **eui64** parameter, the interface identifier of the IPv6 address is derived from the MAC address of the device.

For more information about EUI64, see the IPv6 Feature Overview and Configuration Guide.

Examples To configure a PD prefix named prefix1 on interface vlan1 and then add an IPv6 address, use the following commands:

```
awplus# configure terminal
awplus(config)# interface vlan1
awplus(config-if)# ipv6 enable
awplus(config-if)# ipv6 dhcp client pd prefix1
awplus(config-if)# ipv6 address prefix1::1/64
```

In this example, the prefix will be assigned from the pool on the PD client. The host portion or suffix will be ::1 for the last 64 bits.

To configure a PD prefix named prefix1 on interface vlan1 and then add an IPv6 address using EUI-64 identifiers, use the following commands:

```
awplus# configure terminal
awplus(config)# interface vlan1
awplus(config-if)# ipv6 enable
awplus(config-if)# ipv6 dhcp client pd prefix1
awplus(config-if)# ipv6 address prefix1/64 eui64
```

In this example, the prefix will be assigned from the pool on the PD client. The host portion or suffix is created from the EUI-64 identifier of the interface for the last 64 bits.

To assign the IPv6 address 2001:0db8::a2/48 to the VLAN interface `vlan2`, use the following commands:

```
awplus# configure terminal
awplus(config)# interface vlan2
awplus(config-if)# ipv6 address 2001:0db8::a2/48
```

To remove the IPv6 address 2001:0db8::a2/48 from the VLAN interface `vlan2`, use the following commands:

```
awplus# configure terminal
awplus(config)# interface vlan2
awplus(config-if)# no ipv6 address 2001:0db8::a2/48
```

To assign the IPv6 address to the PPP interface `ppp0`, use the following commands:

```
awplus# configure terminal
awplus(config)# interface ppp0
awplus(config-fr-subif)# ipv6 address 2001:0db8::a2/64
```

To remove the IPv6 address 2001:0db8::a2/64 from the PPP interface `ppp0`, use the following commands:

```
awplus# configure terminal
awplus(config)# interface ppp0
awplus(config-if)# no ipv6 address 2001:0db8::a2/64
```

To assign the **eui64** derived address in the prefix `2001:db8::/64` to VLAN interface `vlan2`, use the following commands:

```
awplus# configure terminal
awplus(config)# interface vlan2
awplus(config-if)# ipv6 address 2001:0db8::/64 eui64
```

To remove the **eui64** derived address in the prefix `2001:db8::/32` from VLAN interface `vlan2`, use the following commands:

```
awplus# configure terminal
awplus(config)# interface vlan2
awplus(config)# interface vlan2
awplus(config-if)# no ipv6 address 2001:0db8::/64 eui64
```

Validation Commands

show running-config

show ipv6 dhcp binding

show ipv6 interface brief

show ipv6 route

Related Commands

ipv6 dhcp client pd

ipv6 dhcp pool

ipv6 local pool

ipv6 nd prefix (DHCPv6)

prefix-delegation pool

ipv6 address dhcp

Overview Use this command to activate the DHCPv6 client on the interface that you are configuring. This allows the interface to use the DHCPv6 client to obtain its IPv6 configuration details from a DHCPv6 server on its connected network.

The command also enables IPv6 on the interface, which creates an EUI-64 link-local address as well as enabling RA processing and SLAAC.

Use the **no** variant of this command to stop the interface from obtaining IPv6 configuration details from a DHCPv6 server.

The DHCPv6 client supports the following IP configuration options:

- Option 1 - the subnet mask for your device.
- Option 3 - a list of default routers.
- Option 6 - a list of DNS servers. This list appends the DNS servers set on your device with the dns-server (DHCPv6) command.
- Option 15 - a domain name used to resolve host names. This option replaces any domain name that you have set with the domain-name (DHCPv6) command.
- Option 51 - lease expiration time.

Syntax

```
ipv6 address dhcp [default-route-to-server]
no ipv6 address dhcp
```

Mode Interface Configuration for a VLAN interface, a local loopback interface, or a PPP interface.

Usage Use the **default-route-to-server** option to allow the automatic configuration of a default route to the DHCPv6 server. Note that this option is not enabled by default when you enable the DHCP client on an interface.

Examples To set the interface vlan10 to use DHCPv6 to obtain an IPv6 address, use the commands:

```
awplus# configure terminal
awplus(config)# interface vlan10
awplus(config-if)# ipv6 enable
awplus(config-if)# ipv6 address dhcp
```

To stop the interface vlan10 from using DHCPv6 to obtain its IPv6 address, use the commands:

```
awplus# configure terminal
awplus(config)# interface vlan10
awplus(config-if)# no ipv6 address dhcp
```

To set the PPP interface ppp0 to use DHCPv6 to obtain an IPv6 address, use the commands:

```
awplus# configure terminal
awplus(config)# interface ppp0
awplus(config-if)# ipv6 address dhcp
```

To stop the PPP interface ppp0 from using DHCPv6 to obtain its IPv6 address, use the commands:

```
awplus# configure terminal
awplus(config)# interface ppp0
awplus(config-if)# no ipv6 address dhcp
```

Related Commands

clear ipv6 dhcp client

ipv6 address

ipv6 address (DHCPv6 PD)

show ipv6 dhcp interface

show running-config

ipv6 dhcp client pd

Overview Use this command in Interface Configuration mode to enable the DHCPv6 client process and enable requests for prefix delegation through the interface that you are configuring.

Use the **no** variant of this command to disable requests for prefix delegation. This is the default setting.

For further information about DHCPv6 Prefix Delegation, which is used to automate the process of assigning prefixes, see the DHCPv6 Feature Overview and Configuration Guide.

Syntax

```
ipv6 dhcp client pd <prefix-name> <default-route-to-server>
no ipv6 dhcp client pd
```

Parameter	Description
<prefix-name>	Specify an IPv6 general prefix name. Valid characters are any printable character. If the name contains spaces then you must enclose it in "quotation marks".
<default-route-to-server>	Specify the default route to the DHCP server

Mode Interface Configuration

Default Prefix delegation is disabled by default on an interface.

Usage Entering the **ipv6 dhcp client pd** command starts the DHCPv6 client process if not already running, and enables requests for prefix delegation through the interface on which the command is configured.

When prefix delegation is enabled and a prefix is acquired, the prefix is stored in the IPv6 prefix pool with an internal name defined by the required *<prefix-name>* placeholder parameter. The ipv6 address command can then refer to the prefixes stored in the IPv6 prefix pool.

Examples To enable prefix delegation with the prefix name prefix-name on the VLAN interface vlan2, use the following commands:

```
awplus# configure terminal
awplus(config)# interface vlan2
awplus(config-if)# ipv6 enable
awplus(config-if)# ipv6 dhcp client pd my-prefix-name
```

To disable prefix delegation on the VLAN interface vlan2, use the following commands:

```
awplus# configure terminal
awplus(config)# interface vlan2
awplus(config-if)# no ipv6 dhcp client pd
```

Related Commands

ipv6 enable

clear ipv6 dhcp client

ipv6 address (DHCPv6 PD)

ipv6 nd prefix (DHCPv6)

show ipv6 dhcp binding

show ipv6 dhcp interface

ipv6 dhcp option

Overview Use this command in Global Configuration mode to create a user-defined DHCPv6 option. You can then use this option when configuring a DHCPv6 server address pool, by using the option (DHCPv6) command.

Options with the same number as one of the pre-defined options override the standard option definition. The pre-defined options use the option numbers 1, 3, 6, 15, and 51.

Use the **no** variant of this command to remove either the specified user-defined option. This also removes user-defined options from the associated DHCPv6 server address pools.

Syntax

```
ipv6 dhcp option <1-254> [name <option-name>] [<option-type>]
no ipv6 dhcp option <1-254>|<option-name>
```

Parameter	Description	
<1-254>	The option number of the option. Options with the same number as one of the standard options overrides the standard option definition.	
<option-name>	Option name used to identify the option. You cannot use a number as the option name. Valid characters are any printable character. If the name contains spaces then you must enclose it in "quotation marks". Default: no default	
<option-type>	The option value. You must specify a value that is appropriate to the option type:	
	`asci`	An ASCII text string
	`hex`	A hexadecimal string. Valid characters are the numbers 0–9 and letters a–f. Embedded spaces are not valid. The string must be an even number of characters, from 2 and 256 characters long.
	`ipv6`	An IPv6 address or prefix that has hexadecimal notation in the format `HHHH:HHHH::HHHH:HHHH`. To create a list of IPv6 addresses, you must add each IPv6 address individually by using the option command multiple times.
	`integer`	A number from 0 to 4294967295.
	`flag`	A value that either sets (to 1) or unsets (to 0) a flag: **true**, **on**, or **enabled** will set the flag. **f alse**, **off** or **disabled** will unset the flag.

Mode Global Configuration

Examples

To define a user-defined ASCII string option as option 66, without a name, use the following commands:

```
awplus# configure terminal
awplus(config)# ipv6 dhcp option 66 ascii
```

To define a user-defined hexadecimal string option as option 46, with the name “tcpip- node-type”, use the following commands:

```
awplus# configure terminal
awplus(config)# ipv6 dhcp option 46 name tcpip-node-type hex
```

To define a user-defined IP address option as option 175, with the name `special-address`, use the following commands:

```
awplus# configure terminal
awplus(config)# ipv6 dhcp option 175 name special-address ip
```

To remove the specific user-defined option with the option number `12`, use the following commands:

```
awplus# configure terminal
awplus(config)# no ipv6 dhcp option 12
```

To remove the specific user-defined option with the option name `perform-router-discovery`, use the following commands:

```
awplus# configure terminal
awplus(config)# no ipv6 dhcp option perform-router-discovery
```

Related Commands

dns-server (DHCPv6)

domain-name (DHCPv6)

option (DHCPv6)

show ipv6 dhcp

ipv6 dhcp pool

Overview Use this command in Global Configuration mode to enter the DHCPv6 Configuration mode for the DHCPv6 server pool name as specified in the required command parameter. If the name specified is not associated with an existing pool, the device will create a new pool with this name, then enter the configuration mode for the new pool.

Once you have entered the DHCPv6 configuration mode, all commands executed before the next **exit** command will apply to this pool.

You can create multiple DHCPv6 server pools on devices with multiple interfaces. This allows the device to act as a DHCPv6 server on multiple interfaces to distribute different information to clients on the different networks.

Use the **no** variant of this command to delete the specific DHCPv6 pool.

Syntax

```
ipv6 dhcp pool <DHCPv6-poolname>
no ipv6 dhcp pool <DHCPv6-poolname>
```

Parameter	Description
<DHCPv6-poolname>	Description used to identify this DHCPv6 server pool. Valid characters are any printable character. If the name contains spaces then you must enclose it in "quotation marks".

Mode Global Configuration

Usage All DHCPv6 prefix pool names must be unique. IPv6 prefix pools have a similar function to IPv4 address pools. Contrary to IPv4, a block of IPv6 addresses (an IPv6 address prefix) are assigned and not single IPv6 addresses. IPv6 prefix pools are not allowed to overlap.

Once a pool is configured, it cannot be changed. To change the configuration, you must remove then recreate a IPv6 prefix pool. All IPv6 prefixes already allocated are also freed.

Examples To create the DHCPv6 pool named `P2` and enter DHCPv6 configuration mode, use the following commands:

```
awplus# configure terminal
awplus(config)# ipv6 dhcp pool P2
awplus(config-dhcp6)#
```

To delete the DHCPv6 pool named `P2`, use the following commands:

```
awplus# configure terminal
awplus(config)# no ipv6 dhcp pool P2
```

Related Commands

ipv6 local pool

option (DHCPv6)

prefix-delegation pool

show ipv6 dhcp binding

show ipv6 dhcp pool

ipv6 dhcp server

Overview Use this command in Interface Configuration mode to enable DHCPv6 server for the current IPv6 configured interface to use the specified DHCPv6 server pool name.

The DHCPv6 server service listens for DHCPv6 requests on the IPv6 configured interface. The DHCPv6 server service does not run on interfaces without IPv6 configured on them.

Use the **no** variant of this command to disable the DHCPv6 server.

Syntax

```
ipv6 dhcp-server [<DHCPv6-poolname>]
no ipv6 dhcp-server
```

Parameter	Description
<DHCPv6-poolname>	Specify a named DHCPv6 server pool as defined with the ipv6 dhcp pool command. Valid characters are any printable character. If the name contains spaces then you must enclose it in "quotation marks".

Mode Interface Configuration

Usage The **ipv6 dhcp server** command enables the DHCPv6 service on a specified interface using the pool for prefix delegation and configuration through the specified interface.

Note that DHCPv6 client, DHCPv6 server and DHCPv6 relay are mutually exclusive on an interface. When one of the DHCPv6 functions is enabled on an interface then another DHCPv6 function cannot be enabled on the same interface.

Examples To enable the DHCPv6 server service and use the DHCPv6 pool named P2 on VLAN interface vlan2, use the following commands:

```
awplus# configure terminal
awplus(config)# interface vlan2
awplus(config-if)# ipv6 dhcp server P2
```

To disable the DHCPv6 server on VLAN interface vlan2, use the following commands:

```
awplus# configure terminal
awplus(config)# interface vlan2
awplus(config-if)# no ipv6 dhcp server
```

Related Commands

ipv6 dhcp pool

show ipv6 dhcp binding

show ipv6 dhcp pool

ipv6 local pool

Overview Use this command in Global Configuration mode to configure a local DHCPv6 server prefix delegation pool specifying a poolname and a prefix/prefix length. You can optionally exclude the locally assigned prefix from the pool with the **exclude-local-prefix** keyword.

Use the **no** variant of this command to remove a local DHCPv6 server prefix delegation pool specifying the poolname.

Syntax

```
ipv6 local pool <DHCPv6-poolname> <delegated-prefix-name>
<ipv6-prefix/prefix-length> <assigned-length>
[exclude-local-prefix]
```

```
no ipv6 local pool
```

Parameter	Description
<DHCPv6-poolname>	Description used to identify this DHCPv6 server pool. Valid characters are any printable character. If the name contains spaces then you must enclose it in “quotation marks”.
<delegated-prefix-name>	Description used to identify the delegated prefix name from the parent PD (Prefix Delegation) server. If the name contains spaces then you must enclose it in “quotation marks”.
<ipv6-prefix/prefix-length>	Specify an IPv6 prefix and prefix length. The prefix length indicates the length of the IPv6 prefix assigned to the pool. The IPv6 address uses the format X:X::X:X/Prefix-Length. The prefix-length is usually set between 0 and 64.
<assigned-length>	Specify an IPv6 prefix length assigned to the user from the pool in the range <1-128>. Note that the value of the *assigned-length* parameter entered cannot be less than or equal to the *prefix-length* parameter value entered. An assigned length must be longer than a prefix length.
exclude-local-prefix	Specify this keyword to exclude the locally assigned prefix from the pool.

Default No DHCPv6 server prefix delegation pool is configured by default.

Mode Global Configuration

Usage All IPv6 prefix pool names must be unique. IPv6 prefix pools have a similar function to IPv4 address pools. Contrary to IPv4, a block of IPv6 addresses (an IPv6 address prefix) are assigned and not single IPv6 addresses. IPv6 prefix pools are not allowed to overlap.

Once a pool is configured, it cannot be changed. To change the configuration, you must remove then recreate a IPv6 prefix pool. All IPv6 prefixes already allocated are also freed.

Examples To create a local DHCPv6 local pool named P2 with the IPv6 prefix and prefix length 2001:0db8::/32 with an assigned length of 64, use the following commands:

```
awplus# configure terminal
awplus(config)# ipv6 local pool P2 2001:0db8::/32 64
```

To remove a configured DHCPv6 local pool, use the following commands:

```
awplus# configure terminal
awplus(config)# no ipv6 local pool
```

Related Commands ipv6 dhcp pool

show ipv6 dhcp pool

ipv6 nd prefix (DHCPv6)

Overview Use this command to specify IPv6 RA (Router Advertisement) prefix information generated from the DHCPv6 server for DHCPv6 prefix-delegation for a VLAN.

Use the **no** variant of this command to remove IPv6 RA prefix information from the DHCPv6 Server for DHCPv6 Prefix-Delegation for the interface. Use the **all** parameter with the **no** variant of this command to remove all prefix names and all prefixes for an interface.

Syntax

```
ipv6 nd prefix <ipv6-prefix-name>
<ipv6-prefix/length>{<valid-lifetime>|infinite}
{<preferred-lifetime>|infinite} {off-link|no-autoconfig}
```

```
no ipv6 nd prefix {<ipv6-prefix-name>|<ipv6-prefix/length>|all}
```

Parameter	Description
<ipv6-prefix-name>	The IPv6 prefix name advertised on the router advertisement message sent from the device. The IPv6 prefix name is delegated from the DHCPv6 Server configured for DHCPv6 Prefix-Delegation.
<ipv6-prefix/length>	The IPv6 prefix and prefix length advertised on the router advertisement message sent from the device. The IPv6 address prefix uses the format X:X::/prefix-length. The prefix-length is usually set between 0 and 64.
<valid-lifetime>	The the period during which the specified IPv6 address prefix is valid. This can be set to a value between 5 and 315360000 seconds. Note that this period should be set to a value greater than that set for the prefix preferred-lifetime. See the Usage notes after this parameter table for a description of valid lifetime and how it determines invalid IPv6 addresses upon expiry.
`infinite`	Specifying this keyword instead of entering a value for the <*valid-lifetime*> parameter applies an infinite valid lifetime.
<preferred-lifetime>	Specifies the IPv6 prefix preferred lifetime. This is the period during which the IPv6 address prefix is considered current. Set this to a value between 0 and 315360000 seconds. Note that this period should be set to a value less than that set for the prefix valid-lifetime. See the Usage notes after this parameter table for a description of preferred lifetime and how it determines deprecated IPv6 addresses upon expiry.
`infinite`	Specifying this keyword instead of entering a value for the <*preferred-lifetime*> parameter applies an infinite valid lifetime.
`off-link`	Specify the IPv6 prefix off-link flag.
`no-autoconfig`	Specify the IPv6 prefix no autoconfiguration flag. Setting this flag indicates that the prefix is not to be used for autoconfiguration.
`all`	Specify all prefix names and all prefixes are removed when used with the no variant of this command.

Mode Interface Configuration for a VLAN interface or a PPP interface.

Usage This command specifies the IPv6 prefix flags that are advertised by the router advertisement message.

Preferred IPv6 addresses or prefixes are available to interfaces for unrestricted use and are deprecated when the preferred timer expires.

Deprecated IPv6 addresses and prefixes are available for use and are discouraged but not forbidden. A deprecated address or prefix should not be used as a source address or prefix, but packets sent from deprecated addresses or prefixes are delivered as expected.

An IPv6 address or prefix becomes invalid and is not available to an interface when the valid lifetime timer expires. Invalid addresses or prefixes should not appear as the source or destination for a packet.

Examples The following example configures the device to issue RAs (Router Advertisements) on the VLAN interface vlan4, and advertises the DHCPv6 prefix name prefix1 and the IPv6 address prefix of 2001:0db8::/32.

```
awplus# configure terminal
awplus(config)# interface vlan2
awplus(config-if)# ipv6 enable
awplus(config-if)# ipv6 dhcp client pd prefix1
awplus(config-if)# ipv6 nd prefix prefix1 2001:0db8::/32
```

The following example resets router advertisements on the VLAN interface vlan4, so the address prefix of 2001:0db8::/32 is not advertised from the device.

```
awplus# configure terminal
awplus(config)# interface vlan4
awplus(config-if)# no ipv6 nd prefix 2001:0db8::/32
```

The following example removes all prefix names and prefixes from VLAN interface vlan4:

```
awplus# configure terminal
awplus(config)# interface vlan4
awplus(config-if)# no ipv6 nd prefix all
```

Related Commands

ipv6 address (DHCPv6 PD)

ipv6 dhcp client pd

ipv6 dhcp pool

ipv6 local pool

prefix-delegation pool

show ipv6 dhcp binding

link-address

Overview Use this command in DHCPv6 Configuration mode to specify a link-address prefix within a DHCPv6 Server pool.

Note that you can only configure one link address per DHCPv6 pool. Configuring another link address in the same DHCPv6 pool overwrites the previously configured link address.

Use the **no** variant of this command to remove the link-address prefix from the DHCPv6 Server pool.

Syntax

```
link-address <ipv6-prefix/prefix-length>
no link-address
```

Parameter	Description
<ipv6-prefix/prefix-length>	Specify an IPv6 prefix and prefix length. The prefix length indicates the length of the IPv6 prefix assigned to the pool. The IPv6 address uses the format X:X::X:X/Prefix-Length. The prefix-length is usually set between 0 and 64.

Default No DHCPv6 Server pool configuration link address prefix is configured by default.

Mode DHCPv6 Configuration

Usage Link addresses are configured in DHCPv6 Server address pools when there are remote clients that communicate via intermediate relay(s).

RELAY-FORW and RELAY-REPL relay packets contain the requesting link address source.

This command is used to match incoming requests from PD (Prefix Delegation) clients (received via an intermediate relay) to a configured delegation pool.

When an address on the incoming interface of the DHCPv6 server or a link address set in the incoming delegation request packet from the prefix delegation client matches the link-address prefix configured in the delegation pool, the DHCPv6 server is able to match and use the appropriate delegation pool for relayed delegation request messages.

If there is no match between incoming delegation request packets from the prefix delegation client and the link-address prefix configured in the delegation pool, the DHCPv6 Server does not delegate an IPv6 prefix to the requesting device.

The link address should be set to the network prefix where the prefix delegation client resides. The prefix delegation server will also need a forwarding path (IPv6 route) back to the network prefix where the prefix delegation client resides.

For more information, see the DHCPv6 Feature Overview and Configuration Guide.

Examples

To configure the IPv6 prefix and prefix length 2001:0db8:1::/48 as the link address for pool P2, use the following commands:

```
awplus# configure terminal
awplus(config)# ipv6 dhcp pool P2
awplus(config-dhcp6)# address prefix 2001:0db8:2::/48
awplus(config-dhcp6)# link-address 2001:0db8:1::/48
```

To remove the link address, use the commands:

```
awplus# configure terminal
awplus(config)# ipv6 dhcp pool P2
awplus(config-dhcp6)# no link-address
```

Related Commands

ipv6 dhcp pool

show ipv6 dhcp pool

option (DHCPv6)

Overview Use this command in DHCPv6 Configuration mode to add a user-defined option to the DHCPv6 prefix pool you are configuring. For the **hex**, **integer**, and **flag** option types, if the option already exists, the new option overwrites the existing option's value.

Use the **no** variant of this command to remove the specified user-defined option from the DHCPv6 server pool, or to remove all user-defined options from the DHCPv6 server pool.

Syntax

```
option [<1-254>|<option-name>] <option-value>
no option [<1-254>|<option-value>]
```

Parameter	Description	
<1-254>	The option number of the option. Options with the same number as one of the standard options overrides the standard option definition.	
<option-name>	Option name associated with the option.	
<option-value>	The option value. You must specify a value that is appropriate to the option type:	
	`hex`	A hexadecimal string. Valid characters are the numbers 0–9 and letters a–f. Embedded spaces are not valid. The string must be an even number of characters, from 2 and 256 characters long.
	`ipv6`	An IPv6 prefix that has the hexadecimal `X:X::X:X` notation. To create a list of IPv6 prefixes, you must add each IPv6 prefix individually using this command multiple times.
	`integer`	A number from 0 to 4294967295.
	`flag`	A value of either true, on, or enabled to set the flag, or false, off or disabled to unset the flag.

Mode DHCPv6 Configuration

Usage You must define a DHCPv6 option using the ipv6 dhcp option command before using the option (DHCPv6) command.

Note that options with an **ipv6** type can hold a list of IPv6 prefix (i.e. entries that have the`X:X::X:X` address format), so if the option already exists in the pool, then the new IP address is added to the list of existing IPv6 prefixes. Also note options with the same number as one of the pre-defined options override the standard option definition. The pre-defined options use the option numbers 1, 3, 6, 15, and 51.

Examples

To add the IPv6 type option named `sntp-server-addr` to the pool `P2` and give the option the value `ipv6`, use the following commands:

```
awplus# configure terminal
awplus(config)# ipv6 dhcp option 22 name sntp_server_addr ipv6
awplus(config)# ipv6 dhcp pool P2
awplus(config-dhcp6)# option sntp_server_addr ipv6
```

To add the ASCII-type option named `tftp-server-name` to the pool `P2` and give the option the value `server1`, use the following commands:

```
awplus# configure terminal
awplus(config)# ipv6 dhcp pool P2
awplus(config-dhcp6)# option tftp-server-name server1
```

To add the hex-type option named `tcpip-node-type` to the pool `P2`and give the option the value `08af`, use the following commands:

```
awplus# configure terminal
awplus(config)# ipv6 dhcp pool P2
awplus(config-dhcp6)# option tcpip-node-type 08af
```

To add multiple IP addresses for the ip-type option `175`, use the following commands:

```
awplus(config-dhcp6)# option 175 2001:0db8:3001::/64
awplus(config-dhcp6)# option 175 2001:0db8:3002::/64
awplus(config-dhcp6)# option 175 2001:0db8:3003::/64
```

To add the option `179` to a pool, and give the option the value `123456`, use the following command:

```
awplus(config-dhcp6)# option 179 123456
```

To add a user-defined flag option with the name `perform-router-discovery`, use the following command:

```
awplus(config-dhcp6)# option perform-router-discovery yes
```

To clear all user-defined options from a DHCP address pool, use the following command:

```
awplus(config-dhcp6)# no option
```

To clear a user-defined option, named `tftp-server-name`, use the following command:

```
awplus(config-dhcp6)# no option tftp-server-name
```

Related Commands

dns-server (DHCPv6)

ipv6 dhcp option

ipv6 dhcp pool

show ipv6 dhcp pool

prefix-delegation pool

Overview Use this command in DHCPv6 Configuration mode to add a DHCPv6 server prefix-delegation pool entry to the current DHCPv6 pool configuration. You must define a DHCPv6 server prefix-delegation pool using the ipv6 dhcp pool command before using this command.

Use the **no** variant of this command to remove a DHCPv6 server prefix-delegation pool from the current DHCPv6 pool configuration.

Syntax
```
prefix-delegation pool <DHCPv6-poolname> [lifetime
{<valid-time>|infinite} {<preferred-time>|infinite}]
```
```
no prefix-delegation pool <DHCPv6-poolname>
```

Parameter	Description
<DHCPv6-poolname>	Description used to identify this DHCPv6 server pool. Valid characters are any printable character. If the name contains spaces then you must enclose it in "quotation marks".
`lifetime`	Optional. Specify a time period for the hosts to remember router advertisements (RAs). If you specify this parameter then you must also specify a *valid-time* and a *preferred-time* value. See the Usage notes below this parameter table for a description of preferred and valid lifetimes and how these determine deprecated or invalid IPv6 addresses upon expiry.
<valid-time>	Specify a valid lifetime in seconds in the range <5-315360000>.
`infinite`	Specify an infinite valid lifetime or an infinite preferred lifetime, or both, when using this keyword.
<preferred-time>	Specify a valid lifetime in seconds in the range <5-315360000>.

Default No IPv6 local prefix pool is specified by default.

Mode DHCPv6 Configuration

Usage The DHCPv6 server assigns prefixes dynamically from an IPv6 local prefix pool, which is configured using the ipv6 local pool command and is associated with a DHCPv6 configuration pool using this command. When the server receives a prefix request from a client, it attempts to obtain unassigned prefixes from the pool. After the client releases the previously assigned prefixes, the server returns the prefixes to the pool for reassignment.

Preferred IPv6 addresses or prefixes are available to interfaces for unrestricted use and are deprecated when the preferred timer expires.

Deprecated IPv6 addresses and prefixes are available for use and are discouraged but not forbidden. A deprecated address or prefix should not be used as a source

address or prefix, but packets sent from deprecated addresses or prefixes are delivered as expected.

An IPv6 address or prefix becomes invalid and is not available to an interface when the valid lifetime timer expires. Invalid addresses or prefixes should not appear as the source or destination for a packet.

Example This example adds DHCPv6 Prefix Delegation pool pd_pool1 to DHCPv6 pool pool1:

```
awplus# configure terminal
awplus(config)# ipv6 local pool pd_pool1 2001:0db8::/48 56
awplus(config)# ipv6 dhcp pool pool1
awplus(config-dhcp6)# prefix-delegation pool pd_pool1
```

Related Commands

ipv6 dhcp pool

ipv6 local pool

show ipv6 dhcp pool

show counter ipv6 dhcp-client

Overview Use this command in User Exec or Privilege Exec mode to show DHCPv6 client counter information. See show counter ipv6 dhcp-server for DHCPv6 server information.

For information on filtering and saving command output, see the "Getting Started with AlliedWare Plus" Feature Overview and Configuration Guide.

Syntax

```
show counter ipv6 dhcp-client
```

Mode User Exec and Privileged Exec

Example To display the DHCPv6 client counter information, use the command:

```
awplus# show counter ipv6 dhcp-client
```

Output Figure 49-2: Example output from the **show counter ipv6 dhcp-client** command

```
awplus#show counter ipv6 dhcp-client
SOLICIT out              ......... 20
ADVERTISE in             ......... 12
REQUEST out              ......... 1
CONFIRM out              ......... 0
RENEW out                ......... 0
REBIND out               ......... 0
REPLY in                 ......... 0
RELEASE out              ......... 0
DECLINE out              ......... 0
INFORMATION-REQUEST out ......... 0
```

Table 1: Parameters in the output of the **show counter ipv6 dhcp-client** command

Parameter	Description
SOLICIT out	Displays the count of SOLICIT messages sent by the DHCPv6 client.
ADVERTISE in	Displays the count of ADVERTISE messages received by the DHCPv6 client.
REQUEST out	Displays the count of REQUEST messages sent by the DHCPv6 client.
CONFIRM out	Displays the count of CONFIRM messages sent by the DHCPv6 client.
RENEW out	Displays the count of RENEW messages sent by the DHCPv6 client.

Table 1: Parameters in the output of the **show counter ipv6 dhcp-client** command (cont.)

Parameter	Description
`REBIND out`	Displays the count of REBIND messages sent by the DHCPv6 client.
`REPLY in`	Displays the count of REPLY messages received by the DHCPv6 client.
`RELEASE out`	Displays the count of RELEASE messages sent by the DHCPv6 client.
`DECLINE out`	Displays the count of DECLINE messages sent by the DHCPv6 client.
`INFORMATION-REQUEST out`	Displays the count of INFORMATION-REQUEST messages sent by the DHCPv6 client.

Related Commands show counter ipv6 dhcp-server

show counter ipv6 dhcp-server

Overview Use this command in User Exec or Privileged Exec mode to show DHCPv6 server counter information. See show counter ipv6 dhcp-client for DHCPv6 client information.

For information on filtering and saving command output, see the "Getting Started with AlliedWare Plus" Feature Overview and Configuration Guide.

Syntax

```
show counter ipv6 dhcp-server
```

Mode User Exec and Privileged Exec

Example To display the DHCPv6 server counter information, use the command:

```
awplus# show counter ipv6 dhcp-server
```

Output Figure 49-3: Example output from the **show counter ipv6 dhcp-server** command

```
awplus#show counter ipv6 dhcp-server
SOLICIT in              ......... 20
ADVERTISE out           ......... 12
REQUEST in              ......... 1
CONFIRM in              ......... 0
RENEW in                ......... 0
REBIND in               ......... 0
REPLY out               ......... 0
RELEASE in              ......... 0
DECLINE in              ......... 0
INFORMATION-REQUEST in  ......... 0
```

Table 2: Parameters in the output of the **show counter ipv6 dhcp-server** command

Parameter	Description
SOLICIT in	Displays the count of SOLICIT messages received by the DHCPv6 server.
ADVERTISE out	Displays the count of ADVERTISE messages sent by the DHCPv6 server.
REQUEST in	Displays the count of REQUEST messages received by the DHCPv6 server.
CONFIRM in	Displays the count of CONFIRM messages received by the DHCPv6 server.
RENEW in	Displays the count of RENEW messages received by the DHCPv6 server.

Table 2: Parameters in the output of the **show counter ipv6 dhcp-server** command (cont.)

Parameter	Description
`REBIND in`	Displays the count of REBIND messages received by the DHCPv6 server.
`REPLY out`	Displays the count of REPLY messages sent by the DHCPv6 server.
`RELEASE in`	Displays the count of RELEASE messages received by the DHCPv6 server.
`DECLINE in`	Displays the count of DECLINE messages received by the DHCPv6 server.
`INFORMATION-REQUEST in`	Displays the count of INFORMATION-REQUEST messages received by the DHCPv6 server

Related Commands show counter ipv6 dhcp-client

show ipv6 dhcp

Overview Use this command in User Exec or Privileged Exec mode to show the DHCPv6 unique identifier (DUID) configured on your device.

For information on filtering and saving command output, see the "Getting Started with AlliedWare Plus" Feature Overview and Configuration Guide.

Syntax

```
show ipv6 dhcp
```

Mode User Exec and Privileged Exec

Usage The DUID is based on the link-layer address for both DHCPv6 client and DHCPv6 server identifiers. The device uses the MAC address from the lowest interface number for the DUID.

The DUID is used by a DHCPv6 client to obtain an IPv6 address from a DHCPv6 server. A DHCPv6 server compares the DUID with its database of DUIDs and sends configuration data for an IPv6 address plus the preferred and valid lease time values to a DHCPv6 client.

Example To display the DUID configured on your device, use the command:

```
awplus# show ipv6 dhcp
```

Output Figure 49-4: Example output from the **show ipv6 dhcp** command

```
awplus#show ipv6 dhcp
DHCPv6 Server DUID: 0001000117ab6876001577f7ba23
```

Related Commands ipv6 address dhcp

show ipv6 dhcp binding

Overview Use this command in User Exec or Privileged Exec mode to show the IPv6 address entries that the DHCPv6 server leases to DHCPv6 clients. Note that applying this command with the optional *summary* keyword parameter displays the number of addresses per pool, but not the address or prefix entries per pool.

For information on filtering and saving command output, see the "Getting Started with AlliedWare Plus" Feature Overview and Configuration Guide.

Syntax

```
show ipv6 dhcp binding [summary]
```

Parameter	Description
`summary`	Optional. Specify the **summary** keyword to display summarized information for DHCPv6 server leases to client nodes, displaying the number of address entries per pool, not the addresses or prefixes.

Mode User Exec and Privileged Exec

Example 1 To display the total DHCPv6 leasing address entries for all pools, use the command:

```
awplus# show ipv6 dhcp binding summary
```

Output Figure 49-5: Example output from the **show ipv6 dhcp binding summary** command

```
awplus# show ipv6 dhcp binding summary
Pool Name                  Number of Leased Addresses
-------------------------------------------------
ia-na1                     3
ia-pd1                     5

Total in all Pools:        8
```

Table 3: Parameters in the output of the **show ipv6 dhcp binding summary** command

Parameter	Description
`Pool Name`	Displays a list of all the pool names.
`Number of Leased Addresses`	Displays the number of leased address entries for the pool.
`Total in all Pools`	Displays the total number of leased address entries for all pools.

Example 2 To display addresses, prefixes, and lifetimes for all DHCPv6 leasing entries by pool, enter:

```
awplus# show ipv6 dhcp binding
```

Output Figure 49-6: Example output from the **show ipv6 dhcp binding** command

```
awplus#show ipv6 dhcp binding
Pool ia-na1
 Address 2002:0:3c0::1
         client IAID 77f7ba23, DUID 0001000117c4bbb4001577f7ba23
         preferred lifetime 604800, valid lifetime 2592000
         starts  at 20 Aug 2012 18:38:29
         expires at 19 Sep 2012 18:38:29
Pool ia-pd1
 Prefix  2002:0:3c0::/42
         client IAID 77f7ba23, DUID 0001000117c4bbb4001577f7ba23
         preferred lifetime 604800, valid lifetime 2592000
         starts  at 20 Aug 2012 18:38:29
         expires at 19 Sep 2012 18:38:29
```

Table 4: Parameters in the output of the **showipv6 dhcp binding** command

Parameter	Description
`Address`	Address delegated to the indicated IAID and DUID. See the IAID and DUID descriptions below for further information.
`Prefix`	Prefix delegated to the indicated IAID and DUID. See the IAID and DUID descriptions below for further information.
`DUID`	DHCPv6 unique identifier (DUID) (see RFC 3315). Each DHCPv6 client has as DUID. DHCPv6 servers use DUIDs to identify clients for the association of IAs (Identity Associations) with DHCPv6 clients. DHCPv6 clients use DUIDs to identify a DHCPv6 server.
`IAID`	Identify Association Identifier (IAID) (see RFC 3315). IAIDs are identifiers for IAs (Identity Associations), where an IA is a collection of IPv6 addresses assigned to a DHCPv6 client. Each IA has an associated IAD. Each DHCPv6 client may have more than one IA assigned to it. Each IA holds one type of address.
`preferred lifetime`	The preferred lifetime setting in seconds for the specified IAID and DUID. Preferred IPv6 addresses or prefixes are available to interfaces for unrestricted use and are deprecated when the preferred timer expires. Deprecated IPv6 addresses and prefixes are available for use and are discouraged but not forbidden. A deprecated address or prefix should not be used as a source address or prefix, but packets sent from deprecated addresses or prefixes are delivered as expected.
`valid lifetime`	The valid lifetime setting in seconds for the specified IAID and DUID. An IPv6 address or prefix becomes invalid and is not available to an interface when the valid lifetime timer expires. Invalid addresses or prefixes should not appear as the source or destination for a packet.

Table 4: Parameters in the output of the **showipv6 dhcp binding** command

Parameter	Description
`starts at`	The date and time at which the valid lifetime expires.
`expires at`	The date and time at which the valid lifetime expires.

Related Commands

clear ipv6 dhcp binding

ipv6 dhcp pool

show ipv6 dhcp pool

show ipv6 dhcp interface

Overview Use this command in User Exec or Privileged Exec mode to display DHCPv6 information for a specified interface, or all interfaces when entered without the interface parameter.

For information on filtering and saving command output, see the "Getting Started with AlliedWare Plus" Feature Overview and Configuration Guide.

Syntax

```
show ipv6 dhcp interface [<interface-name>]
```

Parameter	Description
<interface-name>	Optional. Specify the name of the interface to show DHCPv6 information about. Omit this optional parameter to display DHCPv6 information for all interfaces DHCPv6 is configured on.

Mode User Exec and Privileged Exec

Example To display DHCPv6 information for all interfaces DHCPv6 is configured on, use the command:

```
awplus# show ipv6 dhcp interface
```

Output Figure 49-7: Example output from the **show ipv6 dhcp interface** command

```
awplus# show ipv6 dhcp interface
vlan1 is in client mode
 Address 1001::3c0:1
         preferred lifetime 9000, valid lifetime 5000
         starts  at 20 Jan 2012 09:21:35
         expires at 20 Jan 2012 10:25:32
```

Example 2 To display DHCPv6 information for interface vlan2, use the command:

```
awplus# show ipv6 dhcp interface vlan2
```

Output Figure 49-8: Example output from the **show ipv6 dhcp interface vlan2** command

```
awplus# show ipv6 dhcp interface vlan2
vlan2 is in client (Prefix-Delegation) mode
 Prefix name pd1
         prefix 2002:0:3c0::/42
         preferred lifetime 604800, valid lifetime 2592000
         starts  at 20 Aug 2012 09:21:33
         expires at 19 Sep 2012 09:21:33
```

Table 5: Parameters in the output of the **show counter dhcp-client** command

Parameter	Description
`<interface> is in server/client/(Prefix-Delegation) mode`	Displays whether the specified interface is in server or client mode and whether prefix-delegation is applied to an interface.
`Address`	Displays the address of the DHCPv6 server on the interface.
`Prefix name`	Displays the IPv6 general prefix pool name, where prefixes are stored for the interface.
`Using pool`	Displays the name of the pool used by the interface.
`Preference`	Displays the preference value for the DHCPv6 server.

Related Commands ipv6 dhcp client pd

show ipv6 dhcp pool

Overview Use this command in User Exec or Privileged Exec mode to display the configuration details and system usage of the DHCPv6 address pools configured on the device.

For information on filtering and saving command output, see the "Getting Started with AlliedWare Plus" Feature Overview and Configuration Guide.

Syntax

```
show ipv6 dhcp pool [<DHCPv6-address-pool-name>]
```

Parameter	Description
<DHCPv6-address-pool-name>	Name of a specific DHCPv6 address pool. This displays the configuration of the specified DHCPv6 address pool only.

Mode User Exec and Privileged Exec

Example

```
awplus# show ipv6 dhcp pool
```

Output Figure 49-9: Example output from the **show ipv6 dhcp pool** command

```
awplus# show ipv6 dhcp pool
DHCPv6 Pool: ia-na
 Address Prefix   : 1001::/64
         Lifetime: 2592000(valid), 604800(preferred)
 DNS Server: 2001::1
 DNS Server: 2001::2
 Domain Name: example.com
 Domain Name: example.co.jp
 SNTP Server: 2001::5
 SNTP Server: 2001::6
 Option Code : 150
        Value: [ASCII] test-test
DHCPv6 Pool: ia-pd
 PD Pool Name: pd1
    Prefix    : 2002::/38-42
    Lifetime : 2592000(valid), 604800(preferred)
```

Table 6: Parameters in the output of the **show ipv6dhcp pool** command

Parameter	Description
DHCPv6 Pool	Name of the DHCPv6 pool.
Address Prefix	Address prefix to the DHCPv6 pool.

Table 6: Parameters in the output of the **show ipv6dhcp pool** command (cont.)

Parameter	Description
`Address Lifetime`	Valid and preferred lifetimes to the DHCPv6 pool. Preferred IPv6 addresses or prefixes are available to interfaces for unrestricted use and are deprecated when the preferred timer expires. Deprecated IPv6 addresses and prefixes are available for use and are discouraged but not forbidden. A deprecated address or prefix should not be used as a source address or prefix, but packets sent from deprecated addresses or prefixes are delivered as expected. An IPv6 address or prefix becomes invalid and is not available to an interface when the valid lifetime timer expires. Invalid addresses or prefixes should not appear as the source or destination for a packet.
`DNS Server`	IPv6 address of the DNS Server
`Domain name`	URL for the domain name.
`SNTP Server`	IPv6 address of the SNTP (Simple Network Time Protocol) Server.
`Option Code`	DHCP Option code (see RFC 2132).
`Option Value`	DHCP Option value type (see RFC 2132).

Related Commands ipv6 dhcp pool

sntp-address

Overview Use this command in DHCPv6 Configuration mode to add an SNTP Server IPv6 address to a DHCPv6 Server pool.

Use the **no** variant of this command to remove an SNTP Server IPv6 address from a DHCPv6 Server pool.

Syntax

```
sntp-address <ipv6-address>
no sntp-address <ipv6-address>
```

Parameter	Description
<ipv6-address>	Specify an SNTP Server IPv6 address, in hexadecimal notation in the format `X:X::X:X`.

Mode DHCPv6 Configuration

Examples The following example adds an SNTP Server IPv6 address of 2001:0db8::/32 to the DHCPv6 pool named P2:

```
awplus# configure terminal
awplus(config)# ipv6 dhcp pool P2
awplus(config-dhcp6)# sntp-address 2001:0db8::/32
```

The following example removes an SNTP Server IPv6 address of 2001:0db8::/32 to the DHCPv6 pool named P2:

```
awplus# configure terminal
awplus(config)# ipv6 dhcp pool P2
awplus(config-dhcp6)# no sntp-address 2001:0db8::/32
```

Related Commands

dns-server (DHCPv6)

domain-name (DHCPv6)

option (DHCPv6)

show ipv6 dhcp pool

50 NTP Commands

Introduction

Overview

This chapter provides an alphabetical reference for commands used to configure the Network Time Protocol (NTP). For more information, see the NTP Feature Overview and_Configuration Guide.

The device can act as an NTP client to receive time from one or more NTP servers, and as an NTP server.

For information on filtering and saving command output, see the "Getting Started with AlliedWare_Plus" Feature Overview and Configuration Guide.

Command List

- "ntp authenticate" on page 2413
- "ntp authentication-key" on page 2414
- "ntp broadcastdelay" on page 2415
- "ntp discard" on page 2416
- "ntp master" on page 2417
- "ntp peer" on page 2418
- "ntp restrict" on page 2420
- "ntp server" on page 2422
- "ntp source" on page 2424
- "ntp trusted-key (deprecated)" on page 2426
- "show counter ntp (deprecated)" on page 2427
- "show ntp associations" on page 2428
- "show ntp counters" on page 2430
- "show ntp counters associations" on page 2432
- "show ntp status" on page 2434

ntp authenticate

Overview This command enables NTP authentication. This allows NTP to authenticate the associations with other systems for security purposes.

The **no** variant of this command disables NTP authentication.

Syntax

```
ntp authenticate
no ntp authenticate
```

Mode Global Configuration

Examples To enable NTP authentication, use the commands:

```
awplus# configure terminal
awplus(config)# ntp authenticate
```

To disable NTP authentication, use the commands:

```
awplus# configure terminal
awplus(config)# no ntp authenticate
```

ntp authentication-key

Overview This command defines each of the authentication keys. Each key has a key number, a type (MD5 or SHA1), and a value.

The **no** variant of this disables the authentication key.

Syntax

```
ntp authentication-key <keynumber> {md5|sha1} <key> [trusted]
no ntp authentication-key <keynumber>
```

Parameter	Description
`<keynumber>`	*<1-4294967295>* An identification number for the key.
`md5`	Define an MD5 key.
`sha1`	Define an SHA1 key.
`<key>`	The authentication key. For SHA1, this is a 20 hexadecimal character string. For MD5, this is a string of up to 31 ASCII characters.
`trusted`	Add this key to the list of authentication keys that this server trusts.

Mode Global Configuration

Examples To define an MD5 authentication key number 134343 and a key value “mystring”, use the commands:

```
awplus# configure terminal
awplus(config)# ntp authentication-key 134343 md5 mystring
```

To disable the authentication key number 134343 with the key value “mystring”, use the commands:

```
awplus# configure terminal
awplus(config)# no ntp authentication-key 134343 md5 mystring
```

ntp broadcastdelay

Overview Use this command to set the estimated round-trip delay for broadcast packets.

Use the **no** variant of this command to reset the round-trip delay for broadcast packets to the default offset of 0 microseconds.

Syntax

```
ntp broadcastdelay <delay>
no ntp broadcastdelay
```

Parameter	Description
<delay>	*<1-999999>* The broadcast delay in microseconds.

Default 0 microsecond offset, which can only be applied with the **no** variant of this command.

Mode Global Configuration

Examples To set the estimated round-trip delay to 23464 microseconds for broadcast packets, use these commands:

```
awplus# configure terminal
awplus(config)# ntp broadcastdelay 23464
```

To reset the estimated round-trip delay for broadcast packets to the default setting (0 microseconds), use these commands:

```
awplus# configure terminal
awplus(config)# no ntp broadcastdelay
```

ntp discard

Overview Use this command to limit the time between NTP packets on the host or hosts specified by the command ntp restrict. Packets that arrive at greater frequency than the limits are dropped or sent a kiss-of-death response.

Use the **no** variant of this command to return the limits to their default values.

Syntax

```
ntp discard minimum <1-60>
ntp discard average <1-16>
no ntp discard minimum
no ntp discard average
```

Parameter	Description
`minimum <1-60>`	The minimum time between NTP packets, in seconds.
`average <1-16>`	A value that determines the minimum average time between NTP packets. The number of seconds is 2 to the power of the specified value (e.g. if you specify 4, the minimum average time is 16 seconds).

Default Minimum: 2

Average: 3 (8 seconds)

Mode Global Configuration

Example To drop NTP packets from the 192.168.1.0/16 subnet if they arrive more frequently than every 5 seconds, and also send kiss-of-death messages, use the commands:

```
awplus# configure terminal
awplus(config)# ntp discard minimum 5
awplus(config)# ntp restrict 192.168.1.0/16 limited kod
```

To silently drop all NTP packets if they arrive more frequently than once every 4 seconds on average (2 to the power of 2), use the commands:

```
awplus# configure terminal
awplus(config)# ntp discard average 2
awplus(config)# ntp restrict default-v4 limited
awplus(config)# ntp restrict default-v6 limited
```

Related Commands ntp restrict

ntp master

Overview Use this command to make the device to be an authoritative NTP server, even if the system is not synchronized to an outside time source.

Use the **no** variant of this command to stop the device being the designated NTP server.

Syntax

```
ntp master [<stratum>]
no ntp master
```

Parameter	Description
<stratum>	*<1-15>* The stratum number defines the configured level that is set for this master within the NTP hierarchy. The default stratum number is 12.

Mode Global Configuration

Usage The stratum levels define the distance from the reference clock and exist to prevent cycles in the hierarchy. Stratum 1 is used to indicate time servers, which are more accurate than Stratum 2 servers. For more information on the Network Time Protocol go to: www.ntp.org

Examples To stop the device from being the designated NTP server, use the commands:

```
awplus# configure terminal
awplus(config)# no ntp master
```

To make the device the designated NTP server with stratum number 2, use the commands:

```
awplus# configure terminal
awplus(config)# ntp master 2
```

ntp peer

Overview Use this command to configure an NTP peer association. An NTP association is a peer association if this system is willing to either synchronize to the other system, or allow the other system to synchronize to it.

Use the **no** variant of this command to remove the configured NTP peer association.

Syntax

```
ntp peer {<peeraddress>|<peername>}
ntp peer {<peeraddress>|<peername>} [prefer] [key <key>] [version <version>]
no ntp peer {<peeraddress>|<peername>}
```

Parameter	Description
<peeraddress>	Specify the IP address of the peer, entered in the form A.B.C.D for an IPv4 address, or in the form X:X::X:X for an IPv6 address.
<peername>	Specify the peer hostname. The peer hostname can resolve to an IPv4 and an IPv6 address.
`prefer`	Prefer this peer when possible.
`key <key>`	*<1-4294967295>* Configure the peer authentication key.
`version <version>`	*<1-4>* Configure for this NTP version.

Mode Global Configuration

Examples See the following commands for options to configure NTP peer association, key and NTP version for the peer with an IPv4 address of `192.0.2.23`:

```
awplus# configure terminal
awplus(config)# ntp peer 192.0.2.23
awplus(config)# ntp peer 192.0.2.23 prefer
awplus(config)# ntp peer 192.0.2.23 prefer version 4
awplus(config)# ntp peer 192.0.2.23 prefer version 4 key 1234
awplus(config)# ntp peer 192.0.2.23 version 4 key 1234
awplus(config)# ntp peer 192.0.2.23 version 4
awplus(config)# ntp peer 192.0.2.23 key 1234
```

To remove an NTP peer association for this peer with an IPv4 address of `192.0.2.23`, use the following commands:

```
awplus# configure terminal
awplus(config)# no ntp peer 192.0.2.23
```

See the following commands for options to configure NTP peer association, key and NTP version for the peer with an IPv6 address of 2001:0db8:010d::1:

```
awplus# configure terminal
awplus(config)# ntp peer 2001:0db8:010d::1
awplus(config)# ntp peer 2001:0db8:010d::1 prefer
awplus(config)# ntp peer 2001:0db8:010d::1 prefer version 4
awplus(config)# ntp peer 2001:0db8:010d::1 prefer version 4 key
1234
awplus(config)# ntp peer 2001:0db8:010d::1 version 4 key 1234
awplus(config)# ntp peer 2001:0db8:010d::1 version 4
awplus(config)# ntp peer 2001:0db8:010d::1 key 1234
```

To remove an NTP peer association for this peer with an IPv6 address of 2001:0db8:010d::1, use the following commands:

```
awplus# configure terminal
awplus(config)# no ntp peer 2001:0db8:010d::1
```

Related Commands

ntp server

ntp source

ntp restrict

Overview Use this command to restrict NTP functionality for one or more hosts.

You can drop NTP packets from specified hosts, apply frequency limits to NTP packets from specified hosts, or restrict the level of functionality for specified hosts. For more details, see The NTP Public_Services_Project_website.

Use the **no** variant of this command to remove a restriction from one or more hosts.

Syntax

```
ntp restrict
{default-v4|default-v6|<host-address>|<host-subnet>} ignore

ntp restrict
{default-v4|default-v6|<host-address>|<host-subnet>}
[limited [kod]] {nomodify|noquery|nopeer|noserve|notrust}

no ntp restrict
{default-v4|default-v6|<host-address>|<host-subnet>}
```

Parameter	Description
`default-v4`	Apply this restriction to all IPv4 hosts.
`default-v6`	Apply this restriction to all IPv6 hosts.
`<host-address>`	Apply this restriction to the specified IPv4 or IPv6 host. Enter an IPv4 address in the format A.B.C.D. Enter an IPv6 address in the format X:X::X:X.
`<host-subnet>`	Apply this restriction to the specified IPv4 subnet or IPv6 prefix. Enter an IPv4 subnet in the format A.B.C.D/M. Enter an IPv6 prefix in the format X:X::X:X/X.
`ignore`	Block all NTP connections, including time polls, from matching hosts.
`limited`	Apply frequency limits to matching hosts. To specify the frequency limits, use the command ntp discard.
`kod`	Send kiss-of-death packets when the rate limit is exceeded. If you do not specify this, NTP packets are dropped without further processing when the rate limit is exceeded.
`nomodify`	Prevent matching hosts from modifying the NTP configuration, even if they have a trusted key.
`noquery`	Prevent matching hosts from querying this device's NTP status. This option does not block time queries. We recommend using this option on publicly-accessible systems, because it blocks ntpq and ntpdc queries, which can be used in amplification attacks.
`nopeer`	Prevent matching hosts from becoming NTP peers of this device.

Parameter	Description
noserve	Do not serve the time to matching hosts.
notrust	Require that matching hosts authenticate NTP sessions with this device. If you use this option, the device will drop all unsigned NTP packets from matching hosts.

Default None. By default, there are no restrictions configured.

Mode Global Configuration

Example To prevent all hosts from using NTP except for the host 192.0.2.1 and the subnet 192.168.1.0/16, use the commands:

```
awplus# configure terminal
awplus(config)# ntp restrict default-v4 ignore
awplus(config)# ntp restrict default-v6 ignore
awplus(config)# ntp restrict 192.0.2.1
awplus(config)# ntp restrict 192.168.1.0/16
```

To force the host 192.0.2.1 and the subnet 192.168.1.0/16 to authenticate NTP sessions with this device, use the commands:

```
awplus# configure terminal
awplus(config)# ntp restrict 192.0.2.1 notrust
awplus(config)# ntp restrict 192.168.1.0/16 notrust
```

To drop NTP packets from the 192.168.1.0/16 subnet if they arrive more frequently than every 5 seconds, and also send kiss-of-death messages, use the commands:

```
awplus# configure terminal
awplus(config)# ntp discard minimum 5
awplus(config)# ntp restrict 192.168.1.0/16 limited kod
```

Related Commands ntp discard

ntp server

Overview Use this command to configure an NTP server. This means that this system will synchronize to the other system, and not vice versa.

Use the **no** variant of this command to remove the configured NTP server.

Syntax

```
ntp server {<serveraddress>|<servername>}
ntp server {<serveraddress>|<servername>} [prefer] [key <key>] [version <version>]
no ntp server {<serveraddress>|<servername>}
```

Parameter	Description
<serveraddress>	Specify the IP address of the peer, entered in the form `A.B.C.D` for an IPv4 address, or in the form `X:X::X.X` for an IPv6 address.
<servername>	Specify the server hostname. The server hostname can resolve to an IPv4 and an IPv6 address.
`prefer`	Prefer this server when possible.
`key <key>`	*<1-4294967295>* Configure the server authentication key.
`version <version>`	*<1-4>* Configure for this NTP version.

Mode Global Configuration

Examples See the following commands for options to configure an NTP server association, key and NTP version for the server with an IPv4 address of 192.0.1.23:

```
awplus# configure terminal
awplus(config)# ntp server 192.0.1.23
awplus(config)# ntp server 192.0.1.23 prefer
awplus(config)# ntp server 192.0.1.23 prefer version 4
awplus(config)# ntp server 192.0.1.23 prefer version 4 key 1234
awplus(config)# ntp server 192.0.1.23 version 4 key 1234
awplus(config)# ntp server 192.0.1.23 version 4
awplus(config)# ntp server 192.0.1.23 key 1234
```

To remove an NTP peer association for this peer with an IPv4 address of 192.0.1.23, use the commands:

```
awplus# configure terminal
awplus(config)# no ntp server 192.0.1.23
```

See the following commands for options to configure an NTP server association, key and NTP version for the server with an IPv6 address of 2001:0db8:010e::2:

```
awplus# configure terminal
awplus(config)# ntp server 2001:0db8:010e::2
awplus(config)# ntp server 2001:0db8:010e::2 prefer
awplus(config)# ntp server 2001:0db8:010e::2 prefer version 4
awplus(config)# ntp server 2001:0db8:010e::2 prefer version 4
key 1234
awplus(config)# ntp server 2001:0db8:010e::2 version 4 key 1234
awplus(config)# ntp server 2001:0db8:010e::2 version 4
awplus(config)# ntp server 2001:0db8:010e::2 key 1234
```

To remove an NTP peer association for this peer with an IPv6 address of 2001:0db8:010e::2, use the commands:

```
awplus# configure terminal
awplus(config)# no ntp server 2001:0db8:010e::2
```

Related Commands

ntp peer

ntp source

ntp source

Overview Use this command to configure an IPv4 or an IPv6 address for the NTP source interface. This command defines the socket used for NTP messages, and only applies to NTP client behavior.

Note that you cannot use this command when using AMF (Allied Telesis Management Framework) or VCStack.

Use the **no** variant of this command to remove the configured IPv4 or IPv6 address from the NTP source interface.

Syntax

```
ntp source <source-address>
no ntp source
```

Parameter	Description
<source-address>	Specify the IP address of the NTP source interface, entered in the form A.B.C.D for an IPv4 address, or in the form X:X::X.X for an IPv6 address.

Default An IP address is selected based on the most appropriate egress interface used to reach the NTP peer if a configured NTP client source IP address is unavailable or invalid.

Mode Global Configuration

Usage Adding an IPv4 or an IPv6 address allows you to select which source interface NTP uses for peering. The IPv4 or IPv6 address configured using this command is matched to the interface.

When selecting a source IP address to use for NTP messages to the peer, if the configured NTP client source IP address is unavailable then default behavior will apply, and an alternative source IP address is automatically selected. This IP address is based on the most appropriate egress interface used to reach the NTP peer. The configured NTP client source IP may be unavailable if the interface is down, or an invalid IP address is configured that does not reside on the device.

Note that this command only applies to NTP client behavior. The egress interface that the NTP messages use to reach the NTP server is determined by the ntp peer and ntp server commands.

Note that you cannot use this command when using AMF (Allied Telesis Management Framework).

Examples To configure the NTP source interface with the IPv4 address 192.0.2.23, enter the commands:

```
awplus# configure terminal
awplus(config)# ntp source 192.0.2.23
```

To configure the NTP source interface with the IPv6 address 2001:0db8:010e::2, enter the commands:

```
awplus# configure terminal
awplus(config)# ntp source 2001:0db8:010e::2
```

To remove a configured address for the NTP source interface, use the following commands:

```
awplus# configure terminal
awplus(config)# no ntp source
```

Related Commands

ntp peer

ntp server

ntp trusted-key (deprecated)

Overview This command has been deprecated in Software Version 5.4.6-1.1. Please use the **trusted** parameter of the command ntp authentication-key instead.

show counter ntp (deprecated)

Overview From version 5.4.6-1.x onwards, this command has been replaced by the command show ntp counters.

show ntp associations

Overview Use this command to display the status of NTP associations.

Syntax `show ntp associations`

Mode User Exec and Privileged Exec

Example See the sample output of the **show ntp associations** command displaying the status of NTP associations.

Table 1: Example output from the **show ntp associations** command

```
awplus#show ntp associations
     remote           refid      st t when poll reach   delay   offset  jitter
==============================================================================
*server1.example.com
                 .GPS.            1 u    -  256  377   15.126    1.103   0.454
-server2.example2.com
                 192.0.2.2        2 u  173  256  377   28.172   -4.599   0.219
 192.0.2.1       .INIT.          16 s    - 1024    0    0.000    0.000   0.000
+server3.example3.com
                 .GPS.            1 u  205  256  377   27.144    0.775   0.193
* system peer, # backup, + candidate, - outlier, x false ticker
```

Table 2: Parameters in the output from the **show ntp associations** command

Parameter	Description
`* system peer`	The peer that NTP uses to calculate variables like the offset and root dispersion of this AlliedWare Plus device. NTP passes these variables to the clients using this AlliedWare Plus device.
`# backup`	Peers that are usable, but are not among the first six peers sorted by synchronization distance. These peers may not be used.
`+ candidate`	Peers that the NTP algorithm has determined can be used, along with the system peer, to discipline the clock (i.e. to set the time on the AlliedWare Plus device).
`- outlier`	Peers that are not used because their time is significantly different from the other peers.
`x false ticker`	Peers that are not used because they are not consider trustworthy.
`space`	Peers that are not used because they are, for example, unreachable.
`remote`	The peer IP address

Table 2: Parameters in the output from the **show ntp associations** command

Parameter	Description
`refid`	The IP address of the reference clock, or an abbreviation indicating the type of clock (e.g. GPS indicates that the server uses GPS for the reference clock). INIT indicates that the reference clock is initialising, so it is not operational.
`st`	The stratum, which is the number of hops between the server and the accurate time source such as an atomic clock.
`t`	Type, one of: u: unicast or manycast client b: broadcast or multicast clientl: local reference clock s: symmetric peer A: manycast server B: broadcast server M: multicast server
`when`	When last polled (seconds ago, h hours ago, or d days ago).
`poll`	Time between NTP requests from the device to the server.
`reach`	An indication of whether or not the NTP server is responding to requests. 0 indicates there has never been a successful poll; 1 indicates that the last poll was successful; 3 indicates that the last two polls were successful; 377 indicates that the last 8 polls were successful.
`delay`	The round trip communication delay to the remote peer or server, in milliseconds.
`offset`	The mean offset (phase) in the times reported between this local host and the remote peer or server (root mean square, milliseconds).
`jitter`	The mean deviation in the time reported for that remote peer or server (the root mean square of difference of multiple time samples, in milliseconds).

show ntp counters

Overview This command displays packet counters for NTP.

Syntax

```
show ntp counters
```

Mode User Exec and Privileged Exec

Example To display counters for NTP use the command:

```
awplus# show ntp counters
```

Figure 50-1: Example output from **show ntp counters**

```
uptime:                 7212
sysstats reset:         7212
packets received:       307
current version:        237
older version:          69
bad length or format:   0
authentication failed:  0
declined:               0
restricted:             0
rate limited:           0
KoD responses:          0
processed for time:     306
```

Table 50-1: Parameters in the output from **show ntp counters**

Parameter	Description
`uptime`	How long NTP has been running since it was last restarted, in seconds.
`sysstats reset`	How long since show ntp status information was last reset, in seconds.
`packets received`	Total number of NTP client and server packets received by the device.
`current version`	The number of version 4 NTP packets received.
`older version`	The number of NTP packets received that are from an older version, down to version 1, of NTP. NTP is compatible with these versions and processes these packets.
`bad length or format`	The number of NTP packets received that do not conform to the standard packet length. NTP drops these packets.

Table 50-1: Parameters in the output from **show ntp counters** (cont.)

Parameter	Description
`authentication failed`	The number of NTP packets received that failed authentication. NTP drops these packets. Packets can only fail authentication if NTP authentication is enabled with the **ntp authenticate** command.
`declined`	The number of packets that were declined for any reason.
`restricted`	The number of NTP packets received that do not match any restrict statements in the NTP restrictions. NTP drops these packets. See the command ntp restrict for more information.
`rate limited`	The number of packets dropped because the packet rate exceeded its limits. See the command ntp discard for more information.
`KoD responses`	The number of kiss-of-death packets NTP has sent. See the command ntp restrict for more information.
`processed for time`	The number of packets processed by NTP. NTP processes a packet once it has determined that the packet is valid by checking factors such as the packet's authentication, format, access rights and version.

show ntp counters associations

Overview Use this command to display NTP packet counters for individual servers and peers.

Syntax

```
show ntp counters associations
```

Mode User Exec/Privileged Exec

Examples To display packet counters for each NTP server and peer that is associated with this device, use the command:

```
awplus# show ntp counters associations
```

Output Figure 50-2: Example output from **show ntp counters associations**

```
awplus#show ntp counters associations
Peer time-server.example.com
sent: 123
received: 122
auth-failed: 0
bogus-origin: 0
duplicate: 0
bad-header: 0
kod-received: 0
```

Table 50-2: Parameters in the output from **show ntp counters associations**

Parameter	Description
Peer	An NTP peer or server that the device is associated with.
`sent`	The number of NTP packets that this device sent to the peer.
`received`	The number of NTP packets that this device received from the peer.
`auth-failed`	The number of NTP packets received that failed authentication. NTP drops these packets. Packets can only fail authentication if NTP authentication is enabled with the **ntp authenticate** command
`bogus-origin`	The number of packets received that have unexpected timestamps. Such packets are not part of the current request/reply round and may be faked.
`duplicate`	The number of duplicate packets received. Such packets are at best old duplicates and at worst a replay by a hacker. Duplicates can happen in symmetric modes if the poll intervals are uneven.

Table 50-2: Parameters in the output from **show ntp counters associations**

Parameter	Description
`bad-header`	The number of packets where one or more header fields are invalid.
`kod-received`	The number of Kiss of Death packets received from the peer. KoD packets indicate that this device is sending NTP packets more often than the peer will accept them. If you receive KoD packets, you should stop using this server or peer.

Related Commands

ntp discard

ntp restrict

show ntp status

Overview Use this command to display the status of the Network Time Protocol (NTP).

Syntax

```
show ntp status
```

Mode User Exec and Privileged Exec

Example To see information about NTP status, use the command:

```
awplus# show ntp status
```

For information about the output displayed by this command, see ntp.org.

Figure 50-3: Example output from the **show ntp status** command

```
awplus#show ntp status
associd=0 status=061b leap_none, sync_ntp, 1 event, leap_event,
system peer: 10.37.211.97:123
system peer mode:   client
leap indicator:     00
stratum:            4
log2 precision:     -19
root delay:         24.234
root dispersion:    113.912
reference ID:       10.37.211.97
reference time:     daad77a3.846d4632 Mon, Apr 4 2016 23:30:43.517
system jitter:      3.603336
clock jitter:       3.292
clock wander:       0.601
broadcast delay:    0.000
symm. auth. delay:  0.000
```

51 SNMP Commands

Introduction

Overview This chapter provides an alphabetical reference for commands used to configure SNMP. For more information, see:

- the Support for Allied Telesis Enterprise_MIBs in AlliedWare Plus, for information about which MIB objects are supported.
- the SNMP Feature Overview and Configuration_Guide.

For information on filtering and saving command output, see the "Getting Started with AlliedWare Plus" Feature Overview and Configuration Guide.

Command List

- "debug snmp" on page 2437
- "show counter snmp-server" on page 2438
- "show debugging snmp" on page 2442
- "show running-config snmp" on page 2443
- "show snmp-server" on page 2444
- "show snmp-server community" on page 2445
- "show snmp-server group" on page 2446
- "show snmp-server user" on page 2447
- "show snmp-server view" on page 2448
- "snmp trap link-status" on page 2449
- "snmp trap link-status suppress" on page 2451
- "snmp-server" on page 2453
- "snmp-server community" on page 2455
- "snmp-server contact" on page 2456
- "snmp-server enable trap" on page 2457
- "snmp-server engineID local" on page 2459

- "snmp-server engineID local reset" on page 2461
- "snmp-server group" on page 2462
- "snmp-server host" on page 2464
- "snmp-server legacy-ifadminstatus" on page 2466
- "snmp-server location" on page 2467
- "snmp-server source-interface" on page 2468
- "snmp-server startup-trap-delay" on page 2469
- "snmp-server user" on page 2470
- "snmp-server view" on page 2473
- "undebug snmp" on page 2474

debug snmp

Overview This command enables SNMP debugging.

The **no** variant of this command disables SNMP debugging.

Syntax

```
debug snmp
[all|detail|error-string|process|receive|send|xdump]
```

```
no debug snmp
[all|detail|error-string|process|receive|send|xdump]
```

Parameter	Description
`all`	Enable or disable the display of all SNMP debugging information.
`detail`	Enable or disable the display of detailed SNMP debugging information.
`error-string`	Enable or disable the display of debugging information for SNMP error strings.
`process`	Enable or disable the display of debugging information for processed SNMP packets.
`receive`	Enable or disable the display of debugging information for received SNMP packets.
`send`	Enable or disable the display of debugging information for sent SNMP packets.
`xdump`	Enable or disable the display of hexadecimal dump debugging information for SNMP packets.

Mode Privileged Exec and Global Configuration

Example To start SNMP debugging, use the command:

```
awplus# debug snmp
```

To start SNMP debugging, showing detailed SNMP debugging information, use the command:

```
awplus# debug snmp detail
```

To start SNMP debugging, showing all SNMP debugging information, use the command:

```
awplus# debug snmp all
```

Related Commands

show debugging snmp

terminal monitor

undebug snmp

show counter snmp-server

Overview This command displays counters for SNMP messages received by the SNMP agent.

Syntax

```
show counter snmp-server
```

Mode User Exec and Privileged Exec

Example To display the counters for the SNMP agent, use the command:

```
awplus# show counter snmp-server
```

Output Figure 51-1: Example output from the **show counter snmp-server** command

```
SNMP-SERVER counters
inPkts                 ......... 11
inBadVersions          ......... 0
inBadCommunityNames    ......... 0
inBadCommunityUses     ......... 0
inASNParseErrs         ......... 0
inTooBigs              ......... 0
inNoSuchNames          ......... 0
inBadValues            ......... 0
inReadOnlys            ......... 0
inGenErrs              ......... 0
inTotalReqVars         ......... 9
inTotalSetVars         ......... 0
inGetRequests          ......... 2
inGetNexts             ......... 9
inSetRequests          ......... 0
inGetResponses         ......... 0
inTraps                ......... 0
outPkts                ......... 11
outTooBigs             ......... 0
outNoSuchNames         ......... 2
outBadValues           ......... 0
outGenErrs             ......... 0
outGetRequests         ......... 0
outGetNexts            ......... 0
outSetRequests         ......... 0
outGetResponses        ......... 11
outTraps               ......... 0
UnSupportedSecLevels   ......... 0
NotInTimeWindows       ......... 0
UnknownUserNames       ......... 0
UnknownEngineIDs       ......... 0
WrongDigest            ......... 0
DecryptionErrors       ......... 0
UnknownSecModels       ......... 0
InvalidMsgs            ......... 0
UnknownPDUHandlers     ......... 0
```

Table 1: Parameters in the output of the **show counter snmp-server** command

Parameter	Meaning
inPkts	The total number of SNMP messages received by the SNMP agent.
inBadVersions	The number of messages received by the SNMP agent for an unsupported SNMP version. It drops these messages.The SNMP agent on your device supports versions 1, 2C, and 3.
inBadCommunityNames	The number of messages received by the SNMP agent with an unrecognized SNMP community name. It drops these messages.
inBadCommunityUses	The number of messages received by the SNMP agent where the requested SNMP operation is not permitted from SNMP managers using the SNMP community named in the message.
inASNParseErrs	The number of ASN.1 or BER errors that the SNMP agent has encountered when decoding received SNMP Messages.
inTooBigs	The number of SNMP PDUs received by the SNMP agent where the value of the error-status field is 'tooBig'. This is sent by an SNMP manager to indicate that an exception occurred when processing a request from the agent.
inNoSuchNames	The number of SNMP PDUs received by the SNMP agent where the value of the error-status field is 'noSuchName'. This is sent by an SNMP manager to indicate that an exception occurred when processing a request from the agent.
inBadValues	The number of SNMP PDUs received by the SNMP agent where the value of the error-status field is 'badValue'. This is sent by an SNMP manager to indicate that an exception occurred when processing a request from the agent.
inReadOnlys	The number of valid SNMP PDUs received by the SNMP agent where the value of the error-status field is 'readOnly'. The SNMP manager should not generate a PDU which contains the value 'readOnly' in the error-status field. This indicates that there is an incorrect implementations of the SNMP.
inGenErrs	The number of SNMP PDUs received by the SNMP agent where the value of the error-status field is 'genErr'.

Table 1: Parameters in the output of the **show counter snmp-server** command

Parameter	Meaning
inTotalReqVars	The number of MIB objects that the SNMP agent has successfully retrieved after receiving valid SNMP Get-Request and Get-Next PDUs.
inTotalSetVars	The number of MIB objects that the SNMP agent has successfully altered after receiving valid SNMP Set-Request PDUs.
inGetRequests	The number of SNMP Get-Request PDUs that the SNMP agent has accepted and processed.
inGetNexts	The number of SNMP Get-Next PDUs that the SNMP agent has accepted and processed.
inSetRequests	The number of SNMP Set-Request PDUs that the SNMP agent has accepted and processed.
inGetResponses	The number of SNMP Get-Response PDUs that the SNMP agent has accepted and processed.
inTraps	The number of SNMP Trap PDUs that the SNMP agent has accepted and processed.
outPkts	The number of SNMP Messages that the SNMP agent has sent.
outTooBigs	The number of SNMP PDUs that the SNMP agent has generated with the value 'tooBig' in the error-status field. This is sent to the SNMP manager to indicate that an exception occurred when processing a request from the manager.
outNoSuchNames	The number of SNMP PDUs that the SNMP agent has generated with the value `noSuchName' in the error-status field. This is sent to the SNMP manager to indicate that an exception occurred when processing a request from the manager.
outBadValues	The number of SNMP PDUs that the SNMP agent has generated with the value 'badValue' in the error-status field. This is sent to the SNMP manager to indicate that an exception occurred when processing a request from the manager.
outGenErrs	The number of SNMP PDUs that the SNMP agent has generated with the value 'genErr' in the error-status field. This is sent to the SNMP manager to indicate that an exception occurred when processing a request from the manager.
outGetRequests	The number of SNMP Get-Request PDUs that the SNMP agent has generated.

Table 1: Parameters in the output of the **show counter snmp-server** command

Parameter	Meaning
outGetNexts	The number of SNMP Get-Next PDUs that the SNMP agent has generated.
outSetRequests	The number of SNMP Set-Request PDUs that the SNMP agent has generated.
outGetResponses	The number of SNMP Get-Response PDUs that the SNMP agent has generated.
outTraps	The number of SNMP Trap PDUs that the SNMP agent has generated.
UnSupportedSecLevels	The number of received packets that the SNMP agent has dropped because they requested a securityLevel unknown or not available to the SNMP agent.
NotInTimeWindows	The number of received packets that the SNMP agent has dropped because they appeared outside of the authoritative SNMP agent's window.
UnknownUserNames	The number of received packets that the SNMP agent has dropped because they referenced an unknown user.
UnknownEngineIDs	The number of received packets that the SNMP agent has dropped because they referenced an unknown snmpEngineID.
WrongDigest	The number of received packets that the SNMP agent has dropped because they didn't contain the expected digest value.
DecryptionErrors	The number of received packets that the SNMP agent has dropped because they could not be decrypted.
UnknownSecModels	The number of messages received that contain a security model that is not supported by the server. Valid for SNMPv3 messages only.
InvalidMsgs	The number of messages received where the security model is supported but the authentication fails. Valid for SNMPv3 messages only.
UnknownPDUHandlers	The number of times the SNMP handler has failed to process a PDU. This is a system debugging counter.

Related Commands show snmp-server

show debugging snmp

Overview This command displays whether SNMP debugging is enabled or disabled.

Syntax

```
show debugging snmp
```

Mode User Exec and Privileged Exec

Example To display the status of SNMP debugging, use the command:

```
awplus# show debugging snmp
```

Output Figure 51-2: Example output from the **show debugging snmp** command

```
Snmp (SMUX) debugging status:
  Snmp debugging is on
```

Related Commands debug snmp

show running-config snmp

Overview This command displays the current configuration of SNMP on your device.

Syntax

```
show running-config snmp
```

Mode Privileged Exec

Example To display the current configuration of SNMP on your device, use the command:

```
awplus# show running-config snmp
```

Output Figure 51-3: Example output from the **show running-config snmp** command

```
snmp-server contact AlliedTelesis
snmp-server location Philippines
snmp-server group grou1 auth read view1 write view1 notify view1
snmp-server view view1 1 included
snmp-server community public
snmp-server user user1 group1 auth md5 password priv des
password
```

Related Commands show snmp-server

show snmp-server

Overview This command displays the status and current configuration of the SNMP server.

Syntax

```
show snmp-server
```

Mode Privileged Exec

Example To display the status of the SNMP server, use the command:

```
awplus# show snmp-server
```

Output Figure 51-4: Example output from the **show snmp-server** command

```
SNMP Server ........................... Enabled
IP Protocol ........................... IPv4
SNMPv3 Engine ID (configured name) ... Not set
SNMPv3 Engine ID (actual) ............. 0x80001f888021338e4747b8e607
```

Related Commands

debug snmp

show counter snmp-server

snmp-server

snmp-server engineID local

snmp-server engineID local reset

show snmp-server community

Overview This command displays the SNMP server communities configured on the device. SNMP communities are specific to v1 and v2c.

Syntax

```
show snmp-server community
```

Mode Privileged Exec

Example To display the SNMP server communities, use the command:

```
awplus# show snmp-server community
```

Output Figure 51-5: Example output from the **show snmp-server community** command

```
SNMP community information:
  Community Name ........... public
    Access ................. Read-only
    View ................... none
```

Related Commands

show snmp-server

snmp-server community

show snmp-server group

Overview This command displays information about SNMP server groups. This command is used with SNMP version 3 only.

Syntax

```
show snmp-server group
```

Mode Privileged Exec

Example To display the SNMP groups configured on the device, use the command:

```
awplus# show snmp-server group
```

Output Figure 51-6: Example output from the **show snmp-server group** command

```
SNMP group information:
  Group name ............... guireadgroup
    Security Level ........ priv
    Read View ............. guiview
    Write View ............ none
    Notify View ........... none

  Group name ............... guiwritegroup
    Security Level ........ priv
    Read View ............. none
    Write View ............ guiview
    Notify View ........... none
```

Related Commands show snmp-server

snmp-server group

show snmp-server user

Overview This command displays the SNMP server users and is used with SNMP version 3 only.

Syntax
```
show snmp-server user
```

Mode Privileged Exec

Example To display the SNMP server users configured on the device, use the command:

```
awplus# show snmp-server user
```

Output Figure 51-7: Example output from the **show snmp-server user** command

```
Name                Group name          Auth        Privacy
-------             -------------       -------     ----------
freddy              guireadgroup        none        none
```

Related Commands
show snmp-server

snmp-server user

show snmp-server view

Overview This command displays the SNMP server views and is used with SNMP version 3 only.

Syntax
```
show snmp-server view
```

Mode Privileged Exec

Example To display the SNMP server views configured on the device, use the command:

```
awplus# show snmp-server view
```

Output Figure 51-8: Example output from the **show snmp-server view** command

```
SNMP view information:
  View Name ............... view1
    OID ..................... 1
    Type ................... included
```

Related Commands
show snmp-server

snmp-server view

snmp trap link-status

Overview Use this command to enable SNMP to send link status notifications (traps) for the interfaces when an interface goes up (linkUp) or down (linkDown).

Use the **no** variant of this command to disable the sending of link status notifications.

Syntax

```
snmp trap link-status [enterprise]
no snmp trap link-status
```

Parameter	Description
`enterprise`	Send an Allied Telesis enterprise type of link trap.

Default By default, link status notifications are disabled.

Mode Interface Configuration

Usage The link status notifications can be enabled for the following interface types:

- switch port (e.g. port 1.0.1)
- VLAN (e.g. vlan2)
- Ethernet (e.g. eth1)
- static and dynamic link aggregation (e.g. sa2, po2)

To specify where notifications are sent, use the snmp-server host command. To configure the device globally to send other notifications, use the snmp-server enable trap command.

Examples To enable SNMP to send link status notifications for ports 1.0.2 to 1.0.6, use following commands:

```
awplus# configure terminal
awplus(config)# interface port1.0.2-1.0.6
awplus(config-if)# snmp trap link-status
```

To enable SNMP to send an Allied Telesis enterprise type of link status notification for port1.0.1, use following commands:

```
awplus# configure terminal
awplus(config)# interface 1.0.1
awplus(config-if)# snmp trap link-status enterprise
```

To disable the sending of link status notifications for port 1.0.2, use following commands:

```
awplus# configure terminal
awplus(config)# interface port1.0.2
awplus(config-if)# no snmp trap link-status
```

Related Commands

show interface

snmp trap link-status suppress

snmp-server enable trap

snmp-server host

snmp trap link-status suppress

Overview Use this command to enable the suppression of link status notifications (traps) for the interfaces beyond the specified threshold, in the specified interval.

Use the **no** variant of this command to disable the suppression of link status notifications for the ports.

Syntax

```
snmp trap link-status suppress {time {<1-60>|default}|threshold
{<1-20>|default}}
```

```
no snmp trap link-status suppress
```

Parameter	Description
`time`	Set the suppression timer for link status notifications.
<1-60>	The suppress time in seconds.
`default`	The default suppress time in seconds (60).
`threshold`	Set the suppression threshold for link status notifications. This is the number of link status notifications after which to suppress further notifications within the suppression timer interval.
<1-20>	The number of link status notifications.
`default`	The default number of link status notifications (20).

Default By default, if link status notifications are enabled (they are enabled by default), the suppression of link status notifications is enabled: notifications that exceed the notification threshold (default 20) within the notification timer interval (default 60 seconds) are not sent.

Mode Interface Configuration

Usage An unstable network can generate many link status notifications. When notification suppression is enabled, a suppression timer is started when the first link status notification of a particular type (linkUp or linkDown) is sent for an interface. If the threshold number of notifications of this type is sent before the timer reaches the suppress time, any further notifications of this type generated for the interface during the interval are not sent. At the end of the interval, the sending of link status notifications resumes, until the threshold is reached in the next interval.

Examples To enable the suppression of link status notifications for ports 1.0.2 to 1.0.6 after 10 notifications have been sent in 40 seconds, use following commands:

```
awplus# configure terminal
```

```
awplus(config)# interface port1.0.2-1.0.6
```

```
awplus(config-if)# snmp trap link-status suppress time 40
threshold 10
```

To disable the suppression link status notifications for port 1.0.2, use following commands:

```
awplus# configure terminal
awplus(config)# interface port1.0.2
awplus(config-if)# no snmp trap link-status suppress
```

Related Commands

show interface

snmp trap link-status

snmp-server

Overview Use this command to enable the SNMP agent (server) on the device. The SNMP agent receives and processes SNMP packets sent to the device, and generates notifications (traps) that have been enabled by the snmp-server enable trap command.

Use the **no** variant of this command to disable the SNMP agent on the device. When SNMP is disabled, SNMP packets received by the device are discarded, and no notifications are generated. This does not remove any existing SNMP configuration.

Syntax

```
snmp-server [ip|ipv6]
no snmp-server [ip|ipv6]
```

Parameter	Description
ip	Enable or disable the SNMP agent for IPv4.
ipv6	Enable or disable the SNMP agent for IPv6.

Default By default, the SNMP agent is enabled for both IPv4 and IPv6. If neither the **ip** parameter nor the **ipv6** parameter is specified for this command, then SNMP is enabled or disabled for both IPv4 and IPv6.

Mode Global Configuration

Examples To enable SNMP on the device for both IPv4 and IPv6, use the commands:

```
awplus# configure terminal
awplus(config)# snmp-server
```

To enable the SNMP agent for IPv4 on the device, use the commands:

```
awplus# configure terminal
awplus(config)# snmp-server ip
```

To disable the SNMP agent for both IPv4 and IPv6 on the device, use the commands:

```
awplus# configure terminal
awplus(config)# no snmp-server
```

To disable the SNMP agent for IPv4, use the commands:

```
awplus(config)# no snmp-server ipv4
```

Related Commands

show snmp-server

show snmp-server community

show snmp-server user

snmp-server community

snmp-server contact

snmp-server enable trap

snmp-server engineID local

snmp-server group

snmp-server host

snmp-server location

snmp-server view

snmp-server community

Overview This command creates an SNMP community, optionally setting the access mode for the community. The default access mode is read only. If view is not specified, the community allows access to all the MIB objects. The SNMP communities are only valid for SNMPv1 and v2c and provide very limited security. Communities should not be used when operating SNMPv3.

The **no** variant of this command removes an SNMP community. The specified community must already exist on the device.

Syntax

```
snmp-server community <community-name> {view <view-name>|ro|rw}
no snmp-server community <community-name> [{view <view-name>}]
```

Parameter	Description
<community-name>	Community name. The community name is a case sensitive string of up to 20 characters.
view	Configure SNMP view. If view is not specified, the community allows access to all the MIB objects.
<view-name>	View name. The view name is a string up to 20 characters long and is case sensitive.
ro	Read-only community.
rw	Read-write community.

Mode Global Configuration

Example The following command creates an SNMP community called “public” with read only access to all MIB variables from any management station.

```
awplus# configure terminal
awplus(config)# snmp-server community public ro
```

The following command removes an SNMP community called “public”

```
awplus# configure terminal
awplus(config)# no snmp-server community public
```

Related Commands

show snmp-server

show snmp-server community

snmp-server view

snmp-server contact

Overview This command sets the contact information for the system. The contact name is:

- displayed in the output of the show system command
- stored in the MIB object sysContact

The **no** variant of this command removes the contact information from the system.

Syntax

```
snmp-server contact <contact-info>
no snmp-server contact
```

Parameter	Description
<contact-info>	The contact information for the system, from 0 to 255 characters long. Valid characters are any printable character and spaces.

Mode Global Configuration

Example To set the system contact information to "support@alliedtelesis.co.nz", use the command:

```
awplus# configure terminal
awplus(config)# snmp-server contact
support@alliedtelesis.co.nz
```

Related Commands

show system

snmp-server location

snmp-server group

snmp-server enable trap

Overview Use this command to enable the switch to transmit the specified notifications (traps).

Note that the Environmental Monitoring traps defined in the AT-ENVMONv2-MIB are enabled by default.

Use the **no** variant of this command to disable the transmission of the specified notifications.

Syntax

```
snmp-server enable trap <trap-list>
no snmp-server enable trap <trap-list>
```

The traps you can enable are shown in the parameter table below.

Parameter	Description
`atmf`	AMF traps.
`atmflink`	AMF Link traps.
`atmfnode`	AMF Node traps.
`atmfrr`	AMF Reboot Rolling traps.
`auth`	Authentication failure.
`bgp`	BGP traps.
`mstp`	MSTP traps.
`nsm`	NSM traps.
`ospf`	OSPF traps.
`pim`	PIM traps.
`thrash-limit`	MAC address Thrash Limiting traps.
`vrrp`	Virtual Router Redundancy (VRRP) traps.

Default By default, no notifications are generated.

Mode Global Configuration

Usage This command cannot be used to enable link status notifications globally. To enable link status notifications for particular interfaces, use the snmp trap link-status command.

To specify where notifications are sent, use the snmp-server host command.

Note that more than one trap can be configured with one command entry, and also note this command applied to notifications send by SNMP version 3.

Examples

To enable the device to send a notification if an AMF node changes its status, use the following commands:

```
awplus# configure terminal
awplus(config)# snmp-server enable trap atmfnode
```

To enable the device to send MAC address Thrash Limiting traps, use the following commands:

```
awplus# configure terminal
awplus(config)# snmp-server enable trap thrash-limit
```

To disable the device from sending MAC address Thrash Limiting traps, use the following commands:

```
awplus# configure terminal
awplus(config)# no snmp-server enable trap thrash-limit
```

To enable the device to send OSPF and VRRP-related traps, use the following commands:

```
awplus# configure terminal
awplus(config)# snmp-server enable trap ospf vrrp
```

To disable OSPF traps being sent out by the device, use the following commands:

```
awplus# configure terminal
awplus(config)# no snmp-server enable trap ospf
```

Related Commands

show snmp-server

snmp trap link-status

snmp-server host

snmp-server engineID local

Overview Use this command to configure the SNMPv3 engine ID. The SNMPv3 engine ID is used to uniquely identify the SNMPv3 agent on a device when communicating with SNMP management clients. Once an SNMPv3 engine ID is assigned, this engine ID is permanently associated with the device until you change it.

Use the **no** variant of this command to set the user defined SNMPv3 engine ID to a system generated pseudo-random value by resetting the SNMPv3 engine. The **no snmp-server engineID local** command has the same effect as the **snmp-server engineID local default** command.

Note that the snmp-server engineID local reset command is used to force the system to generate a new engine ID when the current engine ID is also system generated.

Syntax

```
snmp-server engineID local {<engine-id>|default}
no snmp-server engineID local
```

Parameter	Description
<engine-id>	Specify SNMPv3 Engine ID value, a string of up to 27 characters.
`default`	Set SNMPv3 engine ID to a system generated value by resetting the SNMPv3 engine, provided the current engine ID is user defined. If the current engine ID is system generated, use the snmp-server engineID local reset command to force the system to generate a new engine ID.

Mode Global Configuration

Usage All devices must have a unique engine ID which is permanently set unless it is configured by the user.

Example To set the SNMPv3 engine ID to 800000cf030000cd123456, use the following commands:

```
awplus# configure terminal
awplus(config)# snmp-server engineID local
800000cf030000cd123456
```

To set a user defined SNMPv3 engine ID back to a system generated value, use the following commands:

```
awplus# configure terminal
awplus(config)# no snmp-server engineID local
```

Output The following example shows the engine ID values after configuration:

```
awplus(config)#snmp-server engineid local asdgdfh231234d
awplus(config)#exit
awplus#show snmp-server

SNMP Server ........................... Enabled
IP Protocol ........................... IPv4
SNMPv3 Engine ID (configured name) ... asdgdfh231234d
SNMPv3 Engine ID (actual) ............ 0x80001f888029af52e149198483

awplus(config)#no snmp-server engineid local
awplus(config)#exit
awplus#show snmp-server

SNMP Server ........................... Enabled
IP Protocol ........................... IPv4
SNMPv3 Engine ID (configured name) ... Not set
SNMPv3 Engine ID (actual) ............ 0x80001f888029af52e149198483
```

Related Commands

show snmp-server

snmp-server engineID local reset

snmp-server group

snmp-server engineID local reset

Overview Use this command to force the device to generate a new pseudo-random SNMPv3 engine ID by resetting the SNMPv3 engine. If the current engine ID is user defined, use the snmp-server engineID local command to set SNMPv3 engine ID to a system generated value.

Syntax

```
snmp-server engineID local reset
```

Mode Global Configuration

Example To force the SNMPv3 engine ID to be reset to a system generated value, use the commands:

```
awplus# configure terminal
awplus(config)# snmp-server engineID local reset
```

Related Commands snmp-server engineID local

show snmp-server

snmp-server group

Overview This command is used with SNMP version 3 only, and adds an SNMP group, optionally setting the security level and view access modes for the group. The security and access views defined for the group represent the minimum required of its users in order to gain access.

The **no** variant of this command deletes an SNMP group, and is used with SNMPv3 only. The group with the specified authentication/encryption parameters must already exist.

Syntax

```
snmp-server group <groupname> {auth|noauth|priv} [read
<readname>|write <writename>|notify <notifyname>]
```

```
no snmp-server group <groupname> {auth|noauth|priv}
```

Parameter	Description
<groupname>	Group name. The group name is a string up to 20 characters long and is case sensitive.
`auth`	Authentication.
`noauth`	No authentication and no encryption.
`priv`	Authentication and encryption.
`read`	Configure read view.
<readname>	Read view name.
`write`	Configure write view.
<writename>	Write view name. The view name is a string up to 20 characters long and is case sensitive.
`notify`	Configure notify view.
<notifyname>	Notify view name. The view name is a string up to 20 characters long and is case sensitive.

Mode Global Configuration

Examples To add SNMP group, for ordinary users, user the following commands:

```
awplus# configure terminal
```

```
awplus(config)# snmp-server group usergroup noauth read
useraccess write useraccess
```

To delete SNMP group `usergroup`, use the following commands

```
awplus# configure terminal
```

```
awplus(config)# no snmp-server group usergroup noauth
```

Related Commands

snmp-server

show snmp-server

show snmp-server group

show snmp-server user

snmp-server host

Overview This command specifies an SNMP trap host destination to which Trap or Inform messages generated by the device are sent.

For SNMP version 1 and 2c you must specify the community name parameter. For SNMP version 3, specify the authentication/encryption parameters and the user name. If the version is not specified, the default is SNMP version 1. Inform messages can be sent instead of traps for SNMP version 2c and 3.

Use the **no** variant of this command to remove an SNMP trap host. The trap host must already exist.

The trap host is uniquely identified by:

- host IP address (IPv4 or IPv6),
- inform or trap messages,
- community name (SNMPv1 or SNMP v2c) or the authentication/encryption parameters and user name (SNMP v3).

Syntax

```
snmp-server host {<ipv4-address>|<ipv6-address>} [traps]
[version 1] <community-name>]
```

```
snmp-server host {<ipv4-address>|<ipv6-address>}
[informs|traps] version 2c <community-name>
```

```
snmp-server host {<ipv4-address>|<ipv6-address>}
[informs|traps] version 3 {auth|noauth|priv} <user-name>
```

```
no snmp-server host {<ipv4-address>|<ipv6-address>} [traps]
[version 1] <community-name>
```

```
no snmp-server host {<ipv4-address>|<ipv6-address>}
[informs|traps] version 2c <community-name>
```

```
no snmp-server host {<ipv4-address>|<ipv6-address>}
[informs|traps] version 3 {auth|noauth|priv} <user-name>
```

Parameter	Description
<ipv4-address>	IPv4 trap host address in the format A.B.C.D, for example, 192.0.2.2.
<ipv6-address>	IPv6 trap host address in the format x:x::x:x for example, 2001:db8::8a2e:7334.
informs	Send Inform messages to this host.
traps	Send Trap messages to this host (default).
version	SNMP version to use for notification messages. Default: version 1.
1	Use SNMPv1 (default).
2c	Use SNMPv2c.
3	Use SNMPv3.

Parameter	Description
auth	Authentication.
noauth	No authentication.
priv	Encryption.
<*community-name*>	The SNMPv1 or SNMPv2c community name.
<*user-name*>	SNMPv3 user name.

Mode Global Configuration

Examples To configure the device to send generated traps to the IPv4 host destination 192.0.2.5 with the SNMPv2c community name public, use the following command:

```
awplus# configure terminal
awplus(config)# snmp-server host  version 2c public192.0.2.5
```

To configure the device to send generated traps to the IPv6 host destination 2001:db8::8a2e:7334 with the SNMPv2c community name private, use the following command:

```
awplus# configure terminal
awplus(config)# snmp-server host  version 2c
private2001:db8::8a2e:7334
```

To remove a configured trap host of 192.0.2.5 with the SNMPv2c community name public, use the following command:

```
awplus# configure terminal
awplus(config)# no snmp-server host  version 2c public192.0.2.5
```

Related Commands

snmp trap link-status

snmp-server enable trap

snmp-server view

snmp-server legacy-ifadminstatus

Overview Use this command to set the ifAdminStatus to reflect the operational state of the interface, rather than the administrative state.

The **no** variant of this command sets the ifAdminStatus to reflect the administrative state of the interface.

Syntax

```
snmp-server legacy-ifadminstatus
no snmp-server legacy-ifadminstatus
```

Default Legacy ifAdminStatus is turned off by default, so by default the SNMP ifAdminStatus reflects the administrative state of the interface.

Mode Global Configuration

Usage Note that if you enable Legacy ifAdminStatus, the ifAdminStatus will report a link's status as Down when the link has been blocked by a process such as loop protection.

Example To turn on Legacy ifAdminStatus, use the command:

```
awplus#snmp-server legacy-ifadminstatus
```

Related Commands show interface

snmp-server location

Overview This command sets the location of the system. The location is:

- displayed in the output of the show system command
- stored in the MIB object sysLocation

The **no** variant of this command removes the configured location from the system.

Syntax

```
snmp-server location <location-name>
no snmp-server location
```

Parameter	Description
<location-name>	The location of the system, from 0 to 255 characters long. Valid characters are any printable character and spaces.

Mode Global Configuration

Example To set the location to “server room 523”, use the following commands:

```
awplus# configure terminal
awplus(config)# snmp-server location server room 523
```

Related Commands

show snmp-server

show system

snmp-server contact

snmp-server source-interface

Overview Use this command to specify the originating interface for SNMP traps or informs. An interface specified by this command must already have an IP address assigned to it.

Use the **no** variant of this command to reset the interface to its default value (the originating egress interface).

Syntax

```
snmp-server source-interface {traps|informs} <interface-name>
no snmp-server source-interface {traps|informs}
```

Parameter	Description
`traps`	SNMP traps.
`informs`	SNMP informs.
`<interface-name>`	Interface name (must already have an IP address assigned).

Default By default, the source interface is the originating egress interface of the traps and informs messages.

Mode Global Configuration

Usage An SNMP trap or inform message that is sent from an SNMP server carries the notification IP address of its originating interface. Use this command to assign this interface.

Example The following commands set VLAN20 to be the interface whose IP address is used as the originating address in SNMP informs packets.

```
awplus# configure terminal
awplus(config)# snmp-server source-interface informs vlan20
```

The following commands reset the originating source interface for SNMP trap messages to be the default interface (the originating egress interface):

```
awplus# configure terminal
awplus(config)# no snmp-server source-interface traps
```

Validation Commands show running-config

snmp-server startup-trap-delay

Overview Use this command to set the time in seconds after following completion of the device startup sequence before the device sends any SNMP traps (or SNMP notifications).

Use the no variant of this command to restore the default startup delay of 30 seconds.

Syntax

```
snmp-server startup-trap-delay <delay-time>
no snmp-server startup-trap-delay
```

Parameter	Description
<delay-time>	Specify an SNMP trap delay time in seconds in the range of 30 to 600 seconds.

Default The SNMP server trap delay time is 30 seconds. The no variant restores the default.

Mode Global Configuration

Example To delay the device sending SNMP traps until 60 seconds after device startup, use the following commands:

```
awplus# configure terminal
awplus(config)# snmp-server startup-trap-delay 60
```

To restore the sending of SNMP traps to the default of 30 seconds after device startup, use the following commands:

```
awplus# configure terminal
awplus(config)# no snmp-server startup-trap-delay
```

Validation Commands show snmp-server

snmp-server user

Overview Use this command to create or move users as members of specified groups. This command is used with SNMPv3 only.

The **no** variant of this command removes an SNMPv3 user. The specified user must already exist.

Syntax

```
snmp-server user <username> <groupname> [encrypted] [auth
{md5|sha} <auth-password>] [priv {des|aes} <privacy-password>]
```

```
no snmp-server user <username>
```

Parameter	Description
`<username>`	User name. The user name is a string up to 20 characters long and is case sensitive.
`<groupname>`	Group name. The group name is a string up to 20 characters long and is case sensitive.
`encrypted`	Use the encrypted parameter when you want to enter encrypted passwords.
`auth`	Authentication protocol.
`md5`	MD5 Message Digest Algorithms.
`sha`	SHA Secure Hash Algorithm.
`<auth-password>`	Authentication password. The password is a string of 8 to 20 characters long and is case sensitive.
`priv`	Privacy protocol.
`des`	DES Data Encryption Standard.
`aes`	AES Advanced Encryption Standards.
`<privacy-password>`	Privacy password. The password is a string of 8 to 20 characters long and is case sensitive.

Mode Global Configuration

Usage Additionally this command provides the option of selecting an authentication protocol and (where appropriate) an associated password. Similarly, options are offered for selecting a privacy protocol and password.

- Note that each SNMP user must be configured on both the manager and agent entities. Where passwords are used, these passwords must be the same for both entities.
- Use the **encrypted** parameter when you want to enter already encrypted passwords in encrypted form as displayed in the running and startup configs stored on the device. For example, you may need to move a user from one group to another group and keep the same passwords for the user instead of removing the user to apply new passwords.

- User passwords are entered using plaintext without the **encrypted** parameter and are encrypted according to the authentication and privacy protocols selected.
- User passwords are viewed as encrypted passwords in running and startup configs shown from **show running-config** and **show startup-config** commands respectively. Copy and paste encrypted passwords from running-configs or startup-configs to avoid entry errors.

Examples To add SNMP user `authuser` as a member of group `usergroup`, with authentication protocol `md5`, authentication password `Authpass`, privacy protocol `des` and privacy password `Privpass`, use the following commands

```
awplus# configure terminal
awplus(config)# snmp-server user authuser usergroup auth md5
Authpass priv des Privpass
```

Validate the user is assigned to the group using the **show snmp-server user** command:

```
awplus#show snmp-server user
Name                Group name          Auth         Privacy
-------             -------------       -------      ----------
authuser            usergroup           md5          des
```

To enter existing SNMP user `authuser` with existing passwords as a member of group `newusergroup` with authentication protocol `md5` plus the encrypted authentication password 0x1c74b9c22118291b0ce0cd883f8dab6b74, privacy protocol `des` plus the encrypted privacy password 0x0e0133db5453ebd03822b004eeacb6608f, use the following commands

```
awplus# configure terminal
awplus(config)# snmp-server user authuser newusergroup
encrypted auth md5 0x1c74b9c22118291b0ce0cd883f8dab6b74 priv
des 0x0e0133db5453ebd03822b004eeacb6608f
```

NOTE: *Copy and paste the encrypted passwords from the **running-config** or the **startup-config** displayed, using the **show running-config** and **show startup- config** commands respectively, into the command line to avoid key stroke errors issuing this command.*

Validate the user has been moved from the first group using the **show snmp-server user** command:

```
awplus#show snmp-server user
Name                Group name          Auth         Privacy
-------             -------------       -------      ----------
authuser            newusergroup        md5          des
```

To delete SNMP user `authuser`, use the following commands:

```
awplus# configure terminal
awplus(config)# no snmp-server user authuser
```

Related Commands

show snmp-server user

snmp-server view

snmp-server view

Overview Use this command to create an SNMP view that specifies a sub-tree of the MIB. Further sub-trees can then be added by specifying a new OID to an existing view. Views can be used in SNMP communities or groups to control the remote manager's access.

NOTE: *The object identifier must be specified in a sequence of integers separated by decimal points.*

The **no** variant of this command removes the specified view on the device. The view must already exist.

Syntax

```
snmp-server view <view-name> <mib-name> {included|excluded}
no snmp-server view <view-name>
```

Parameter	Description
<view-name>	SNMP server view name. The view name is a string up to 20 characters long and is case sensitive.
<mib-name>	Object identifier of the MIB.
`included`	Include this OID in the view.
`excluded`	Exclude this OID in the view.

Mode Global Configuration

Examples The following command creates a view called "loc" that includes the system location MIB sub-tree.

```
awplus(config)# snmp-server view loc 1.3.6.1.2.1.1.6.0 included
```

To remove the view "loc" use the following command

```
awplus(config)# no snmp-server view loc
```

Related Commands

show snmp-server view

snmp-server community

undebug snmp

Overview This command applies the functionality of the no debug snmp command.

52 SMTP Commands

Introduction

Overview This chapter provides an alphabetical reference for commands used to configure SMTP.

For information on filtering and saving command output, see the "Getting Started with AlliedWare Plus" Feature Overview and Configuration Guide.

Command List

- "debug mail" on page 2476
- "delete mail" on page 2477
- "mail" on page 2478
- "show counter mail" on page 2479
- "show mail" on page 2480
- "undebug mail" on page 2481

debug mail

Overview This command turns on debugging for sending emails.

The **no** variant of this command turns off debugging for sending emails.

Syntax

```
debug mail
no debug mail
```

Mode Privileged Exec

Examples To turn on debugging for sending emails, use the command:

```
awplus# debug mail
```

To turn off debugging for sending emails, use the command:

```
awplus# no debug mail
```

Related Commands

delete mail

mail

show mail

show counter mail

undebug mail

delete mail

Overview This command deletes mail from the queue.

Syntax

```
delete mail [mail-id <mail-id>|all]
```

Parameter	Description	
`mail-id`	Deletes a single mail from the mail queue.	
	`<mail-id>`	An unique mail ID number. Use the show mail command to display this for an item of mail.
`all`	Delete all the mail in the queue.	

Mode Privileged Exec

Examples To delete a unique mail item `20060912142356.1234` from the queue, use the command:

```
awplus# delete mail 20060912142356.1234
```

To delete all mail from the queue, use the command:

```
awplus# delete mail all
```

Related Commands

debug mail

mail

show mail

mail

Overview This command sends an email using the SMTP protocol. If you specify a file the text inside the file is sent in the message body.

If you do not specify the **to**, **file**, or **subject** parameters, the CLI prompts you for the missing information.

Syntax

```
mail [{to <to>|subject <subject>|file <filename>}]
```

Parameter	Description
`to`	The email recipient.
	<to> Email address.
`subject`	Description of the subject of this email. Use quote marks when the subject text contains spaces.
	<subject> String.
`file`	File to insert as text into the message body.
	<filename> String.

Mode Privileged Exec

Example To send an email to `rei@nerv.com`with the subject `dummy plug configuration`, and with the message body inserted from the file `plug.conf` use the command:

```
awplus# mail rei@nerv.com subject dummy plug configuration
filename plug.conf
```

Related Commands

debug mail

delete mail

show mail

show counter mail

show counter mail

Overview This command displays the mail counters.

Syntax

```
show counter mail
```

Mode User Exec and Privileged Exec

Output Figure 52-1: Example output from the **show counter mail** command

```
Mail Client (SMTP) counters
Mails Sent            ......... 0
Mails Sent Fails      ......... 1
```

Table 1: Parameters in the output of the **show counter mail** command

Parameter	Description
`Mails Sent`	The number of emails sent successfully since the last device restart.
`Mails Sent Fails`	The number of emails the device failed to send since the last device restart.

Example To show the emails in the queue use the command:

```
awplus# show counter mail
```

Related Commands

debug mail

delete mail

mail

show mail

show mail

Overview This command displays the emails in the queue.

Syntax

```
show mail
```

Mode Privileged Exec

Example To display the emails in the queue use the command:

```
awplus# show mail
```

Related Commands

delete mail

mail

show counter mail

undebug mail

Overview This command applies the functionality of the no debug mail command.

53 Secure Shell (SSH) Commands

Introduction

Overview This chapter provides an alphabetical reference for commands used to configure Secure Shell (SSH). For more information, see the SSH Feature Overview and Configuration Guide.

Command List

- "banner login (SSH)" on page 2484
- "clear ssh" on page 2485
- "crypto key destroy hostkey" on page 2486
- "crypto key destroy userkey" on page 2487
- "crypto key generate hostkey" on page 2488
- "crypto key generate userkey" on page 2490
- "crypto key pubkey-chain knownhosts" on page 2491
- "crypto key pubkey-chain userkey" on page 2493
- "debug ssh client" on page 2495
- "debug ssh server" on page 2496
- "service ssh" on page 2497
- "show banner login" on page 2499
- "show crypto key hostkey" on page 2500
- "show crypto key pubkey-chain knownhosts" on page 2502
- "show crypto key pubkey-chain userkey" on page 2504
- "show crypto key userkey" on page 2505
- "show running-config ssh" on page 2506
- "show ssh" on page 2508
- "show ssh client" on page 2510

- "show ssh server" on page 2511
- "show ssh server allow-users" on page 2513
- "show ssh server deny-users" on page 2514
- "ssh" on page 2515
- "ssh client" on page 2517
- "ssh server" on page 2519
- "ssh server allow-users" on page 2521
- "ssh server authentication" on page 2523
- "ssh server deny-users" on page 2525
- "ssh server max-auth-tries" on page 2527
- "ssh server resolve-host" on page 2528
- "ssh server scp" on page 2529
- "ssh server sftp" on page 2530
- "undebug ssh client" on page 2531
- "undebug ssh server" on page 2532

banner login (SSH)

Overview This command configures a login banner on the SSH server. This displays a message on the remote terminal of the SSH client before the login prompt. SSH client version 1 does not support this banner.

To add a banner, first enter the command **banner login**, and hit [Enter]. Write your message. You can use any character and spaces. Use Ctrl+D at the end of your message to save the text and re-enter the normal command line mode.

The banner message is preserved if the device restarts.

The **no** variant of this command deletes the login banner from the device.

Syntax

```
banner login
no banner login
```

Default No banner is defined by default.

Mode Global Configuration

Examples To set a login banner message, use the commands:

```
awplus# configure terminal
awplus(config)# banner login
```

The screen will prompt you to enter the message:

```
Type CNTL/D to finish.
... banner message comes here ...
```

Enter the message. Use Ctrl+D to finish, like this:

```
^D
awplus(config)#
```

To remove the login banner message, use the commands:

```
awplus# configure terminal
awplus(config)# no banner login
```

Related Commands show banner login

clear ssh

Overview This command deletes Secure Shell sessions currently active on the device. This includes both incoming and outgoing sessions. The deleted sessions are closed. You can only delete an SSH session if you are a system manager or the user who initiated the session. If **all** is specified then all active SSH sessions are deleted.

Syntax

```
clear ssh {<1-65535>|all}
```

Parameters	Description
<1-65535>	Specify a session ID in the range 1 to 65535 to delete a specific session.
`all`	Delete all SSH sessions.

Mode Privileged Exec

Examples To stop the current SSH session 123, use the command:

```
awplus# clear ssh 123
```

To stop all SSH sessions active on the device, use the command:

```
awplus# clear ssh all
```

Related Commands service ssh

ssh

crypto key destroy hostkey

Overview This command deletes the existing public and private keys of the SSH server.

When you enable the SSH server, the server automatically generates an SSHv2 host key pair (public and private keys), using RSA with 1024-bit key generation. If you need a key with different parameters than this, you can use the crypto key generate hostkey command to generate that key before you enable the SSH server.

Syntax

```
crypto key destroy hostkey {dsa|ecdsa|rsa|rsa1}
```

Parameters	Description
dsa	Deletes the existing DSA public and private keys.
ecdsa	Deletes the existing ECDSA public and private keys.
rsa	Deletes the existing RSA public and private keys configured for SSH version 2 connections.
rsa1	Deletes the existing RSA public and private keys configured for SSH version 1 connections.

Mode Global Configuration

Example To destroy the RSA host key used for SSH version 2 connections, use the commands:

```
awplus# configure terminal
awplus(config)# crypto key destroy hostkey rsa
```

Related Commands

crypto key generate hostkey

service ssh

crypto key destroy userkey

Overview This command destroys the existing public and private keys of an SSH user configured on the device.

Syntax

```
crypto key destroy userkey <username> {dsa|rsa|rsa1}
```

Parameters	Description
<*username*>	Name of the user whose userkey you are destroying. The username must begin with a letter. Valid characters are all numbers, letters, and the underscore, hyphen and full stop symbols.
dsa	Deletes the existing DSA userkey.
rsa	Deletes the existing RSA userkey configured for SSH version 2 connections.
rsa1	Deletes the existing RSA userkey for SSH version 1 connections.

Mode Global Configuration

Example To destroy the RSA user key for the SSH user `remoteuser`, use the commands:

```
awplus# configure terminal
awplus(config)# crypto key destroy userkey remoteuser rsa
```

Related Commands

crypto key generate hostkey

show ssh

show crypto key hostkey

crypto key generate hostkey

Overview This command generates public and private keys for the SSH server.

When you enable the SSH server, the server automatically generates an SSHv2 host key pair (public and private keys), using RSA with 1024-bit key generation.

If you need a key with different parameters than this, you can use this command to generate that key before you enable the SSH server. If a host key exists with the same cryptography algorithm, this command replaces the old host key with the new key.

This command is not saved in the device configuration. However, the device saves the keys generated by this command in the non-volatile memory.

Syntax

```
crypto key generate hostkey {dsa} [<768-1024>]
crypto key generate hostkey {rsa|rsa1} [<768-32768>]
crypto key generate hostkey {ecdsa} [<256|384>]
```

Parameters	Description
`dsa`	Creates a DSA hostkey. Both SSH version 1 and 2 connections can use the DSA hostkey.
`rsa`	Creates an RSA hostkey for SSH version 2 connections.
`rsa1`	Creates an RSA hostkey for SSH version 1 connections.
`ecdsa`	Creates an ECDSA hostkey. Both SSH version 1 and 2 connections can use the ECDSA hostkey.
<768-32768>	The length in bits of the generated key. The default is 1024 bits.
<256|384>	The ECDSA key size in bits. The default is 256, but it can be set to 384.

Default The default key length for RSA and DSA is 1024 bits.

The default key size for ECDSA is 256 bits.

Mode Global Configuration

Examples To generate an RSA host key for SSH version 2 connections that is 2048 bits in length, use the commands:

```
awplus# configure terminal
awplus(config)# crypto key generate hostkey rsa 2048
```

To generate a DSA host key, use the commands:

```
awplus# configure terminal
awplus(config)# crypto key generate dsa
```

To generate an ECDSA host key with an elliptic curve size of 384 bits, use the commands:

```
awplus# configure terminal
awplus(config)# crypto key generate ecdsa 384
```

Related Commands

crypto key destroy hostkey

service ssh

show crypto key hostkey

crypto key generate userkey

Overview This command generates public and private keys for an SSH user using either an RSA or DSA cryptography algorithm. To use public key authentication, copy the public key of the user onto the remote SSH server.

This command is not saved in the device configuration. However, the device saves the keys generated by this command in the non-volatile memory.

Syntax

```
crypto key generate userkey <username> {dsa} [<768-1024>]
crypto key generate userkey <username> {rsa|rsa1} [<768-32768>]
crypto key generate userkey <username> {ecdsa} [<256|384>]
```

Parameters	Description
<username>	Name of the user that the user key is generated for. The username must begin with a letter. Valid characters are all numbers, letters, and the underscore, hyphen and full stop symbols.
dsa	Creates a DSA userkey. Both SSH version 1 and 2 connections can use a key created with this command.
rsa	Creates an RSA userkey for SSH version 2 connections.
rsa1	Creates an RSA userkey for SSH version 1 connections.
ecdsa	Creates an ECDSA hostkey. Both SSH version 1 and 2 connections can use the ECDSA hostkey.
<768-32768>	The length in bits of the generated key. The default is 1024 bits.
<256|384>	The ECDSA key size in bits. The default is 256, but it can be set to 384.

Mode Global Configuration

Examples To generate a 2048-bits RSA user key for SSH version 2 connections for the user "bob", use the commands:

```
awplus# configure terminal
awplus(config)# crypto key generate userkey bob rsa 2048
```

To generate a DSA user key for the user "lapo", use the commands:

```
awplus# configure terminal
awplus(config)# crypto key generate userkey lapo dsa
```

Related Commands crypto key pubkey-chain userkey

show crypto key userkey

crypto key pubkey-chain knownhosts

Overview This command adds a public key of the specified SSH server to the known host database on your device. The SSH client on your device uses this public key to verify the remote SSH server.

The key is retrieved from the server. Before adding a key to this database, check that the key sent to you is correct.

If the server's key changes, or if your SSH client does not have the public key of the remote SSH server, then your SSH client will inform you that the public key of the server is unknown or altered.

The **no** variant of this command deletes the public key of the specified SSH server from the known host database on your device.

Syntax
```
crypto key pubkey-chain knownhosts [ip|ipv6] <hostname> [rsa|dsa|rsa1]
no crypto key pubkey-chain knownhosts <1-65535>
```

Syntax (VRF-lite)
```
crypto key pubkey-chain knownhosts [vrf <vrf-name>] [ip|ipv6] <hostname> [rsa|dsa|rsa1]
no crypto key pubkey-chain knownhosts [vrf <vrf-name>] <1-65535>
```

Parameter	Description
`vrf`	Apply this command to the specified VRF instance.
<vrf-name>	The VRF instance name
`ip`	Keyword used prior to specifying an IPv4 address
`ipv6`	Keyword used prior to specifying an IPv6 address
<hostname>	IPv4/IPv6 address or hostname of a remote server in the format `a.b.c.d` for an IPv4 address, or in the format `x:x::x:x` for an IPv6 address.
`rsa`	Specify the RSA public key of the server to be added to the known host database.
`dsa`	Specify the DSA public key of the server to be added to the known host database.
`rsa1`	Specify the SSHv1 public key of the server to be added to the know host database.
<1-65535>	Specify a key identifier when removing a key using the **no** parameter.

Default If no cryptography algorithm is specified, then **rsa** is used as the default cryptography algorithm.

Mode Privilege Exec

Usage

This command adds a public key of the specified SSH server to the known host database on the device. The key is retrieved from the server. The remote SSH server is verified by using this public key. The user is requested to check the key is correct before adding it to the database.

If the remote server's host key is changed, or if the device does not have the public key of the remote server, then SSH clients will inform the user that the public key of the server is altered or unknown.

Examples

To add the RSA host key of the remote SSH host IPv4 address `192.0.2.11` to the known host database, use the command:

```
awplus# crypto key pubkey-chain knownhosts 192.0.2.11
```

To delete the second entry in the known host database, use the command:

```
awplus# no crypto key pubkey-chain knownhosts 2
```

Examples (VRF-lite)

To add the RSA host key of the remote SSH host IPv4 address `192.0.2.11` in VRF `red` to the known host database, use the command:

```
awplus# crypto key pubkey-chain knownhosts vrf red 192.0.2.11
```

To delete the second entry in the known host database in VRF `red`, use the command:

```
awplus# no crypto key pubkey-chain knownhosts vrf red 2
```

Validation Commands

show crypto key pubkey-chain knownhosts

Command changes

Version 5.4.6-2.1: VRF-lite support added.

crypto key pubkey-chain userkey

Overview This command adds a public key for an SSH user on the SSH server. This allows the SSH server to support public key authentication for the SSH user. When configured, the SSH user can access the SSH server without providing a password from the remote host.

The **no** variant of this command removes a public key for the specified SSH user that has been added to the public key chain. When a SSH user's public key is removed, the SSH user can no longer login using public key authentication.

Syntax

```
crypto key pubkey-chain userkey <username> [<filename>]
no crypto key pubkey-chain userkey <username> <1-65535>
```

Parameters	Description
<username>	Name of the user that the SSH server associates the key with. The username must begin with a letter. Valid characters are all numbers, letters, and the underscore, hyphen and full stop symbols. Default: no default
<filename>	Filename of a key saved in flash. Valid characters are any printable character. You can add a key as a hexadecimal string directly into the terminal if you do not specify a filename.
<1-65535>	The key ID number of the user's key. Specify the key ID to delete a key.

Mode Global Configuration

Usage You should import the public key file from the client node. The device can read the data from a file on the flash or user terminal.

Or you can add a key as text into the terminal. To add a key as text into the terminal, first enter the command **crypto key pubkey-chain userkey** <*username*>, and hit [Enter]. Enter the key as text. Note that the key you enter as text must be a valid SSH RSA key, not random ASCII text. Use [Ctrl]+D after entering it to save the text and re-enter the normal command line mode.

Note you can generate a valid SSH RSA key on the device first using the **crypto key generate host rsa** command. View the SSH RSA key generated on the device using the **show crypto hostkey rsa** command. Copy and paste the displayed SSH RSA key after entering the **crypto key pubkey-chain userkey** <*username*> command. Use [Ctrl]+D after entering it to save it.

Examples To generate a valid SSH RSA key on the device and add the key, use the following commands:

```
awplus# configure terminal
awplus(config)# crypto key generate host rsa
awplus(config)# exit
awplus# show crypto key hostkey
rsaAAAAB3NzaC1yc2EAAAABIwAAAIEAr1s7SokW5aW2fcOw1TStpb9J20bWluh
nUC768EoWhyPW6FZ2t5360O5M29EpKBmGqlkQaz5V0mU9IQe66+5YyD4UxOKSD
tTI+7jtjDcoGWHb2u4sFwRpXwJZcgYrXW16+6NvNbk+h+c/pqGDijj4SvfZZfe
ITzvvyZW4/I4pbN8=
awplus# configure terminal
awplus(config)# crypto key pubkey-chain userkey joeType CNTL/D
to
finish:AAAAB3NzaC1yc2EAAAABIwAAAIEAr1s7SokW5aW2fcOw1TStpb9J20b
WluhnUC768EoWhyPW6FZ2t5360O5M29EpKBmGqlkQaz5V0mU9IQe66+5YyD4Ux
OKSDtTI+7jtjDcoGWHb2u4sFwRpXwJZcgYrXW16+6NvNbk+h+c/pqGDijj4Svf
ZZfeITzvvyZW4/I4pbN8=control-D
awplus(config)#
```

To add a public key for the user `graydon` from the file `key.pub`, use the commands:

```
awplus# configure terminal
awplus(config)# crypto key pubkey-chain userkey graydon key.pub
```

To add a public key for the user `tamara` from the terminal, use the commands:

```
awplus# configure terminal
awplus(config)# crypto key pubkey-chain userkey tamara
```

and enter the key. Use Ctrl+D to finish.

To remove the first key entry from the public key chain of the user `john`, use the commands:

```
awplus# configure terminal
awplus(config)# no crypto key pubkey-chain userkey john 1
```

Related Commands show crypto key pubkey-chain userkey

debug ssh client

Overview This command enables the SSH client debugging facility. When enabled, any SSH, SCP and SFTP client sessions send diagnostic messages to the login terminal.

The **no** variant of this command disables the SSH client debugging facility. This stops the SSH client from generating diagnostic debugging message.

Syntax

```
debug ssh client [brief|full]
no debug ssh client
```

Parameter	Description
`brief`	Enables brief debug mode.
`full`	Enables full debug mode.

Default SSH client debugging is disabled by default.

Mode Privileged Exec and Global Configuration

Examples To start SSH client debugging, use the command:

```
awplus# debug ssh client
```

To start SSH client debugging with extended output, use the command:

```
awplus# debug ssh client full
```

To disable SSH client debugging, use the command:

```
awplus# no debug ssh client
```

Related Commands

debug ssh server

show ssh client

undebug ssh client

debug ssh server

Overview This command enables the SSH server debugging facility. When enabled, the SSH server sends diagnostic messages to the system log. To display the debugging messages on the terminal, use the **terminal monitor** command.

The **no** variant of this command disables the SSH server debugging facility. This stops the SSH server from generating diagnostic debugging messages.

Syntax

```
debug ssh server [brief|full]
no debug ssh server
```

Parameter	Description
`brief`	Enables brief debug mode.
`full`	Enables full debug mode.

Default SSH server debugging is disabled by default.

Mode Privileged Exec and Global Configuration

Examples To start SSH server debugging, use the command:

```
awplus# debug ssh server
```

To start SSH server debugging with extended output, use the command:

```
awplus# debug ssh server full
```

To disable SSH server debugging, use the command:

```
awplus# no debug ssh server
```

Related Commands

debug ssh client

show ssh server

undebug ssh server

service ssh

Overview This command enables the Secure Shell server on the device. Once enabled, connections coming from SSH clients are accepted.

When you enable the SSH server, the server automatically generates an SSHv2 host key pair (public and private keys), using RSA with 1024-bit key generation. If you need a key with different parameters than this, you can use the crypto key generate hostkey command to generate that key before you enable the SSH server.

The **no** variant of this command disables the Secure Shell server. When the Secure Shell server is disabled, connections from SSH, SCP, and SFTP clients are not accepted. This command does not affect existing SSH sessions. To terminate existing sessions, use the clear ssh command.

Syntax

```
service ssh [ip|ipv6]
no service ssh [ip|ipv6]
```

Default The Secure Shell server is disabled by default. Both IPv4 and IPv6 Secure Shell server are enabled when you issue **service ssh** without specifying the optional **ip** or **ipv6** parameters.

Mode Global Configuration

Examples To enable both the IPv4 and the IPv6 Secure Shell server, use the commands:

```
awplus# configure terminal
awplus(config)# service ssh
```

To enable the IPv4 Secure Shell server only, use the commands:

```
awplus# configure terminal
awplus(config)# service ssh ip
```

To enable the IPv6 Secure Shell server only, use the commands:

```
awplus# configure terminal
awplus(config)# service ssh ipv6
```

To disable both the IPv4 and the IPv6 Secure Shell server, use the commands:

```
awplus# configure terminal
awplus(config)# no service ssh
```

To disable the IPv4 Secure Shell server only, use the commands:

```
awplus# configure terminal
awplus(config)# no service ssh ip
```

To disable the IPv6 Secure Shell server only, use the commands:

```
awplus# configure terminal
awplus(config)# no service ssh ipv6
```

Related Commands

crypto key generate hostkey

show running-config ssh

show ssh server

ssh server allow-users

ssh server deny-users

show banner login

Overview This command displays the banner message configured on the device. The banner message is displayed to the remote user before user authentication starts.

Syntax

```
show banner login
```

Mode User Exec, Privileged Exec, Global Configuration, Interface Configuration, Line Configuration

Example To display the current login banner message, use the command:

```
awplus# show banner login
```

Related Commands banner login (SSH)

show crypto key hostkey

Overview This command displays the public keys generated on the device for the SSH server.

When you enable the SSH server, the server automatically generates an SSHv2 host key pair (public and private keys), using RSA with 1024-bit key generation. If you need a key with different parameters than this, you can use the crypto key generate hostkey command to generate that key before you enable the SSH server.

The private key remains on the device secretly. The public key is copied to SSH clients to identify the server. This command displays the public key.

Syntax

```
show crypto key hostkey [dsa|ecdsa|rsa|rsa1]
```

Parameter	Description
dsa	Displays the DSA algorithm public key. Both SSH version 1 and 2 connections can use the DSA hostkey
ecdsa	Displays the ECDSA algorithm public key. Both SSH version 1 and 2 connections can use the ECDSA hostkey.
rsa	Displays the RSA algorithm public key for SSH version 2 connections.
rsa1	Displays the RSA algorithm public key for SSH version 1 connections.

Mode User Exec, Privileged Exec and Global Configuration

Examples To show the public keys generated on the device for SSH server, use the command:

```
awplus# show crypto key hostkey
```

To display the RSA public key of the SSH server, use the command:

```
awplus# show crypto key hostkey rsa
```

Output Figure 53-1: Example output from the **show crypto key hostkey** command

```
Type Bits   Fingerprint
-------------------------------------------------------
rsa  2058   4e:7d:1d:00:75:79:c5:cb:c8:58:2e:f9:29:9c:1f:48
dsa  1024   fa:72:3d:78:35:14:cb:9a:1d:ca:1c:83:2c:7d:08:43
rsa1 1024   e2:1c:c8:8b:d8:6e:19:c8:f4:ec:00:a2:71:4e:85:8b
```

Table 1: Parameters in output of the **show crypto key hostkey** command

Parameter	Description
`Type`	Algorithm used to generate the key.
`Bits`	Length in bits of the key.
`Fingerprint`	Checksum value for the public key.

Related Commands

crypto key destroy hostkey

crypto key generate hostkey

show crypto key pubkey-chain knownhosts

Overview This command displays the list of public keys maintained in the known host database on the device.

Syntax
```
show crypto key pubkey-chain knownhosts [<1-65535>]
```

Syntax (VRF-lite)
```
show crypto key pubkey-chain knownhosts [vrf <vrf-name>|global]
[<1-65535>]
```

Parameter	Description
`global`	When VRF-lite is configured, apply the command to the global routing and forwarding table.
`vrf`	Apply the command to the specified VRF instance.
<vrf-name>	The name of the VRF instance.
<1-65535>	Key identifier for a specific key. Displays the public key of the entry if specified.

Default Display all keys.

Mode User Exec, Privileged Exec and Global Configuration

When VRF-lite is configured:

- If **vrf** is specified, this command displays the known host database from the specified VRF instance.
- If **global** is specified, this command displays the known host database from the global routing environment.
- If neither **vrf** nor **global** is specified, this command displays the known host database from the global routing environment and each configured VRF.

For more information about VRF, see the VRF Lite Feature Overview and Configuration Guide.

Examples To display public keys of known SSH servers, use the command:

```
awplus# show crypto key pubkey-chain knownhosts
```

To display the key data of the first entry in the known host data, use the command:

```
awplus# show crypto key pubkey-chain knownhosts 1
```

Output Figure 53-2: Example output from the **show crypto key public-chain knownhosts** command

```
No     Hostname         Type Fingerprint
-------------------------------------------------------------------
1      172.16.23.1      rsa  c8:33:b1:fe:6f:d3:8c:81:4e:f7:2a:aa:a5:be:df:18
2      172.16.23.10     rsa  c4:79:86:65:ee:a0:1d:a5:6a:e8:fd:1d:d3:4e:37:bd
3      5ffe:1053:ac21:ff00:0101:bcdf:ffff:0001
                        rsa1 af:4e:b4:a2:26:24:6d:65:20:32:d9:6f:32:06:ba:57
```

Table 2: Parameters in the output of the **show crypto key public-chain knownhosts** command

Parameter	Description
`No`	Number ID of the key.
`Hostname`	Host name of the known SSH server.
`Type`	The algorithm used to generate the key.
`Fingerprint`	Checksum value for the public key.

Related Commands crypto key pubkey-chain knownhosts

Command changes Version 5.4.6-2.1: VRF-lite support added.

show crypto key pubkey-chain userkey

Overview This command displays the public keys registered with the SSH server for SSH users. These keys allow remote users to access the device using public key authentication. By using public key authentication, users can access the SSH server without providing password.

Syntax

```
show crypto key pubkey-chain userkey <username> [<1-65535>]
```

Parameter	Description
<username>	User name of the remote SSH user whose keys you wish to display. The username must begin with a letter. Valid characters are all numbers, letters, and the underscore, hyphen and full stop symbols.
<1-65535>	Key identifier for a specific key.

Default Display all keys.

Mode User Exec, Privileged Exec and Global Configuration

Example To display the public keys for the user `manager` that are registered with the SSH server, use the command:

```
awplus# show crypto key pubkey-chain userkey manager
```

Output Figure 53-3: Example output from the **show crypto key public-chain userkey** command

```
No Type Bits Fingerprint
-------------------------------------------------------------------
1  dsa  1024 2b:cc:df:a8:f8:2e:8f:a4:a5:4f:32:ea:67:29:78:fd
2  rsa  2048 6a:ba:22:84:c1:26:42:57:2c:d7:85:c8:06:32:49:0e
```

Table 3: Parameters in the output of the **show crypto key userkey** command

Parameter	Description
`No`	Number ID of the key.
`Type`	The algorithm used to generate the key.
`Bits`	Length in bits of the key.
`Fingerprint`	Checksum value for the key.

Related Commands crypto key pubkey-chain userkey

show crypto key userkey

Overview This command displays the public keys created on this device for the specified SSH user.

Syntax

```
show crypto key userkey <username> [dsa|rsa|rsa1]
```

Parameter	Description
<username>	User name of the local SSH user whose keys you wish to display. The username must begin with a letter. Valid characters are all numbers, letters, and the underscore, hyphen and full stop symbols.
dsa	Displays the DSA public key.
rsa	Displays the RSA public key used for SSH version 2 connections.
rsa1	Displays the RSA key used for SSH version 1 connections.

Mode User Exec, Privileged Exec and Global Configuration

Examples To show the public key generated for the user, use the command:

```
awplus# show crypto key userkey manager
```

To store the RSA public key generated for the user manager to the file “user.pub”, use the command:

```
awplus# show crypto key userkey manager rsa > manager-rsa.pub
```

Output Figure 53-4: Example output from the **show crypto key userkey** command

```
Type Bits   Fingerprint
-----------------------------------------------------------
rsa  2048   e8:d6:1b:c0:f4:b6:e6:7d:02:2e:a9:d4:a1:ca:3b:11
rsa1 1024   12:25:60:95:64:08:8e:a1:8c:3c:45:1b:44:b9:33:9b
```

Table 4: Parameters in the output of the **show crypto key userkey** command

Parameter	Description
Type	The algorithm used to generate the key.
Bits	Length in bits of the key.
Fingerprint	Checksum value for the key.

Related Commands crypto key generate userkey

show running-config ssh

Overview This command displays the current running configuration of Secure Shell (SSH).

Syntax

```
show running-config ssh
```

Mode Privileged Exec and Global Configuration

Example To display the current configuration of SSH, use the command:

```
awplus# show running-config ssh
```

Output Figure 53-5: Example output from the **show running-config ssh** command

```
!
ssh server session-timeout 600
ssh server login-timeout 30
ssh server allow-users manager 192.168.1.*
ssh server allow-users john
ssh server deny-user john*.a-company.com
ssh server
```

Table 5: Parameters in the output of the **show running-config ssh** command

Parameter	Description
`ssh server`	SSH server is enabled.
`ssh server v2`	SSH server is enabled and only support SSHv2.
`ssh server<port>`	SSH server is enabled and listening on the specified TCP port.
`no ssh server scp`	SCP service is disabled.
`no ssh server sftp`	SFTP service is disabled.
`ssh server session-timeout`	Configure the server session timeout.
`ssh server login-timeout`	Configure the server login timeout.
`ssh server max-startups`	Configure the maximum number of concurrent sessions waiting authentication.
`no ssh server authentication password`	Password authentication is disabled.
`no ssh server authentication publickey`	Public key authentication is disabled.

Table 5: Parameters in the output of the **show running-config ssh** command

Parameter	Description
`ssh server allow-users`	Add the user (and hostname) to the allow list.
`ssh server deny-users`	Add the user (and hostname) to the deny list.

Related Commands

service ssh

show ssh server

show ssh

Overview This command displays the active SSH sessions on the device, both incoming and outgoing.

Syntax

```
show ssh
```

Mode User Exec, Privileged Exec and Global Configuration

Example To display the current SSH sessions on the device, use the command:

```
awplus# show ssh
```

Output Figure 53-6: Example output from the **show ssh** command

```
Secure Shell Sessions:
ID  Type Mode   Peer Host    Username   State       Filename
------------------------------------------------------------
414 ssh  server 172.16.23.1  root       open
456 ssh  client 172.16.23.10 manager    user-auth
459 scp  client 172.16.23.12 root       download    550dev_.awd
463 ssh  client 5ffe:33fe:5632:ffbb:bc35:ddee:0101:ac51
                             manager    user-auth
```

Table 6: Parameters in the output of the **show ssh** command

Parameter	Description
ID	Unique identifier for each SSH session.
Type	Session type; either SSH, SCP, or SFTP.
Mode	Whether the device is acting as an SSH client (client) or SSH server (server) for the specified session.
Peer Host	The hostname or IP address of the remote server or client.
Username	Login user name of the server.

Table 6: Parameters in the output of the **show ssh** command (cont.)

Parameter	Description	
State	The current state of the SSH session. One of:	
	connecting	The device is looking for a remote server.
	connected	The device is connected to the remote server.
	accepted	The device has accepted a new session.
	host-auth	host-to-host authentication is in progress.
	user-auth	User authentication is in progress.
	authenticated	User authentication is complete.
	open	The session is in progress.
	download	The user is downloading a file from the device.
	upload	The user is uploading a file from the device.
	closing	The user is terminating the session.
	closed	The session is closed.
Filename	Local filename of the file that the user is downloading or uploading.	

Related Commands clear ssh

show ssh client

Overview This command displays the current configuration of the Secure Shell client.

Syntax

```
show ssh client
```

Mode User Exec, Privileged Exec and Global Configuration

Example To display the current configuration for SSH clients on the login shell, use the command:

```
awplus# show ssh client
```

Output Figure 53-7: Example output from the **show ssh client** command

```
Secure Shell Client Configuration
-----------------------------------------------------------------
Port                            : 22
Version                         : 2,1
Connect Timeout                 : 30 seconds
Session Timeout                 : 0 (off)
Debug                           : NONE
```

Table 7: Parameters in the output of the **show ssh client** command

Parameter	Description
Port	SSH server TCP port where the SSH client connects to. The default is port 22.
Version	SSH server version; either “1”, “2” or “2,1”.
Connect Timeout	Time in seconds that the SSH client waits for an SSH session to establish. If the value is 0, the connection is terminated when it reaches the TCP timeout.
Debug	Whether debugging is active on the client.

Related Commands show ssh server

show ssh server

Overview This command displays the current configuration of the Secure Shell server.

Note that changes to the SSH configuration affects only new SSH sessions coming from remote hosts, and does not affect existing sessions.

Syntax

```
show ssh server
```

Mode User Exec, Privileged Exec and Global Configuration

Example To display the current configuration of the Secure Shell server, use the command:

```
awplus# show ssh server
```

Output Figure 53-8: Example output from the **show ssh server** command

```
Secure Shell Server Configuration
-----------------------------------------------------------------
SSH Server                          : Enabled
Port                                : 22
Version                             : 2
Services                            : scp, sftp
User Authentication                 : publickey, password
Resolve Hosts                       : Disabled
Session Timeout                     : 0 (Off)
Login Timeout                       : 60 seconds
Maximum Authentication Tries        : 6
Maximum Startups                    : 10
Debug                               : NONE
```

Table 8: Parameters in the output of the **show ssh server** command

Parameter	Description
SSH Server	Whether the Secure Shell server is enabled or disabled.
Port	TCP port where the Secure Shell server listens for connections. The default is port 22.
Version	SSH server version; either “1”, “2” or “2,1”.
Services	List of the available Secure Shell service; one or more of SHELL, SCP or SFTP.
Authentication	List of available authentication methods.
Login Timeout	Time (in seconds) that the SSH server will wait the SSH session to establish. If the value is 0, the client login will be terminated when TCP timeout reaches.

Table 8: Parameters in the output of the **show ssh server** command (cont.)

Parameter	Description
`Idle Timeout`	Time (in seconds) that the SSH server will wait to receive data from the SSH client. The server disconnects if this timer limit is reached. If set at 0, the idle timer remains off.
`Maximum Startups`	The maximum number of concurrent connections that are waiting authentication. The default is 10.
`Debug`	Whether debugging is active on the server.

Related Commands

show ssh

show ssh client

show ssh server allow-users

Overview This command displays the user entries in the allow list of the SSH server.

Syntax

```
show ssh server allow-users
```

Mode User Exec, Privileged Exec and Global Configuration

Example To display the user entries in the allow list of the SSH server, use the command:

```
awplus# show ssh server allow-users
```

Output Figure 53-9: Example output from the **show ssh server allow-users** command

```
Username          Remote Hostname (pattern)
----------------- ------------------------------
awplus            192.168.*
john
manager           *.alliedtelesis.com
```

Table 9: Parameters in the output of the **show ssh server allow-users** command

Parameter	Description
`Username`	User name that is allowed to access the SSH server.
`Remote Hostname (pattern)`	IP address or hostname pattern of the remote client. The user is allowed requests from a host that matches this pattern. If no hostname is specified, the user is allowed from all hosts.

Related Commands

ssh server allow-users

ssh server deny-users

show ssh server deny-users

Overview This command displays the user entries in the deny list of the SSH server. The user in the deny list is rejected to access the SSH server. If a user is not included in the access list of the SSH server, the user is also rejected.

Syntax

```
show ssh server deny-users
```

Mode User Exec, Privileged Exec and Global Configuration

Example To display the user entries in the deny list of the SSH server, use the command:

```
awplus# show ssh server deny-users
```

Output Figure 53-10: Example output from the **show ssh server deny-users** command

```
Username          Remote Hostname (pattern)
----------------- --------------------------------
john              *.b-company.com
manager           192.168.2.*
```

Table 10: Parameters in the output of the **show ssh server deny-user** command

Parameter	Description
`Username`	The user that this rule applies to.
`Remote Hostname (pattern)`	IP address or hostname pattern of the remote client. The user is denied requests from a host that matches this pattern. If no hostname is specified, the user is denied from all hosts.

Related Commands

ssh server allow-users

ssh server deny-users

ssh

Overview This command initiates a Secure Shell connection to a remote SSH server.

If the server requests a password for the user login, the user needs to type in the correct password on "Password:" prompt.

SSH client identifies the remote SSH server by its public key registered on the client device. If the server identification is changed, server verification fails. If the public key of the server has been changed, the public key of the server must be explicitly added to the known host database.

NOTE: *Note that a hostname specified with SSH cannot begin with a hyphen (-) character.*

Syntax

```
ssh [ip|ipv6][{[user <username>]|[port <1-65535>]|[version
{1|2}]}] <hostname> [<line>]
```

Syntax (VRF-lite)

```
ssh [vrf <vrf-name>] [ip|ipv6][{[user <username>]|[port
<1-65535>]|[version {1|2}]}] <hostname> [<line>]
```

Parameter	Description	
`vrf`	Apply the command to the specified VRF instance.	
`<vrf-name>`	The name of the VRF instance.	
`ip`	Specify IPv4 SSH.	
`ipv6`	Specify IPv6 SSH.	
`user`	Login user. If user is specified, the username is used for login to the remote SSH server when user authentication is required. Otherwise the current user name is used.	
	`<username>`	User name to login on the remote server.
`port`	SSH server port. If port is specified, the SSH client connects to the remote SSH server with the specified TCP port. Other- wise, the client port configured by "ssh client" command or the default TCP port (22) is used.	
	`<1-65535>`	TCP port.
`version`	SSH client version. If version is specified, the SSH client supports only the specified SSH version. By default, SSH client uses SSHv2 first. If the server does not support SSHv2, it will try SSHv1. The default version can be configured by "ssh client" command.	
	`1`	Use SSH version 1.
	`2`	Use SSH version 2.

Parameter	Description
<hostname>	IPv4/IPv6 address or hostname of a remote server. The address is in the format A.B.C.D for an IPv4 address, or in the format X:X::X:X for an IPv6 address. Note that a hostname specified with SSH cannot begin with a hyphen (-) character.
<line>	A command to execute on the remote server. If a command is specified, the command is executed on the remote SSH server and the session is disconnected when the remote command finishes.

Mode User Exec and Privileged Exec

Examples To login to the remote SSH server at 192.0.2.5, use the command:

```
awplus# ssh ip 192.0.2.5
```

To login to the remote SSH server at 192.0.2.5 as user “manager”, use the command:

```
awplus# ssh ip user manager 192.0.2.5
```

To login to the remote SSH server at 192.0.2.5 that is listening TCP port 2000, use the command:

```
awplus# ssh port 2000 192.0.2.5
```

To login to the remote SSH server with example_host using IPv6 session, use the command:

```
awplus# ssh ipv6 example_host
```

To run the **cmd** command on the remote SSH server at 192.0.2.5, use the command:

```
awplus# ssh ip 192.0.2.5 cmd
```

Example (VRF-lite) To login to the remote SSH server at 192.168.1.1 on VRF “red”, use the command:

```
awplus# ssh vrf red 192.168.1.1
```

Related Commands

crypto key generate userkey

crypto key pubkey-chain knownhosts

debug ssh client

ssh client

Command changes Version 5.4.6-2.1: VRF-lite support added.

ssh client

Overview This command modifies the default configuration parameters of the Secure Shell (SSH) client. The configuration is used for any SSH client on the device to connect to remote SSH servers. Any parameters specified on SSH client explicitly override the default configuration parameters.

The change affects the current user shell only. When the user exits the login session, the configuration does not persist. This command does not affect existing SSH sessions.

The **no** variant of this command resets configuration parameters of the Secure Shell (SSH) client changed by the ssh client command, and restores the defaults.

This command does not affect the existing SSH sessions.

Syntax

```
ssh client {port <1-65535>|version {1|2}|session-timeout
<0-3600>|connect-timeout <1-600>}
```

```
no ssh client {port|version|session-timeout|connect-timeout}
```

Parameter	Description	
`port`	The default TCP port of the remote SSH server. If an SSH client specifies an explicit port of the server, it overrides the default TCP port. Default: 22	
	<1-65535>	TCP port number.
`version`	The SSH version used by the client for SSH sessions. The SSH client supports both version 2 and version 1 Default: version 2 Note: SSH version 2 is the default SSH version. SSH client supports SSH version 1 if SSH version 2 is not configured using a ssh version command.	
	`1`	SSH clients on the device supports SSH version 1 only.
	`2`	SSH clients on the device supports SSH version 2 only
`session-timeout`	The global session timeout for SSH sessions. If the session timer lapses since the last time an SSH client received data from the remote server, the session is terminated. If the value is 0, then the client does not terminate the session. Instead, the connection is terminated when it reaches the TCP timeout. Default: 0 (session timer remains off)	
	<0-3600>	Timeout in seconds.

Parameter	Description
`connect-timeout`	The maximum time period that an SSH session can take to become established. The SSH client terminates the SSH session if this timeout expires and the session is still not established. Default: 30
	<1-600> Timeout in seconds.

Mode Privileged Exec

Examples To configure the default TCP port for SSH clients to 2200, and the session timer to 10 minutes, use the command:

```
awplus# ssh client port 2200 session-timeout 600
```

To configure the connect timeout of SSH client to 10 seconds, use the command:

```
awplus# ssh client connect-timeout 10
```

To restore the connect timeout to its default, use the command:

```
awplus# no ssh client connect-timeout
```

Related Commands show ssh client

ssh

ssh server

Overview This command modifies the configuration of the SSH server. Changing these parameters affects new SSH sessions connecting to the device.

The **no** variant of this command restores the configuration of a specified parameter to its default. The change affects the SSH server immediately if the server is running. Otherwise, the configuration is used when the server starts.

To enable the SSH server, use the service ssh command.

Syntax

```
ssh server {[v1v2|v2only]|<1-65535>}
ssh server {[session-timeout <0-3600>] [login-timeout <1-600>]
[max-startups <1-128>]}
no ssh server {[session-timeout] [login-timeout]
[max-startups]}
```

Parameter	Description
v1v2	Supports both SSHv2 and SSHv1client connections. Default: v1v2
v2only	Supports SSHv2 client connections only.
<1-65535>	The TCP port number that the server listens to for incoming SSH sessions. Default: 22
session-timeout	There is a maximum time period that the server waits before deciding that a session is inactive and should be terminated. The server considers the session inactive when it has not received any data from the client, and when the client does not respond to keep alive messages. Default: 0 (session timer remains off).
	<0-3600> Timeout in seconds.
login-timeout	The maximum time period the server waits before disconnecting an unauthenticated client. Default: 60
	<1-600> Timeout in seconds.
max-startups	The maximum number of concurrent unauthenticated connections the server accepts. When the number of SSH connections awaiting authentication reaches the limit, the server drops any additional connections until authentication succeeds or the login timer expires for a connection. Default: 10
	<1-128> Number of sessions.

Mode Global Configuration

Examples

To configure the session timer of SSH server to 10 minutes (600 seconds), use the commands:

```
awplus# configure terminal
awplus(config)# ssh server login-timeout 600
```

To configure the login timeout of SSH server to 30 seconds, use the commands:

```
awplus# configure terminal
awplus(config)# ssh server login-timeout 30
```

To limit the number of SSH client connections waiting authentication from SSH server to 3, use the commands:

```
awplus# configure terminal
awplus(config)# ssh server max-startups
```

To set max-startups parameters of SSH server to the default configuration, use the commands:

```
awplus# configure terminal
awplus(config)# no ssh server max-startups
```

To support the Secure Shell server with TCP port 2200, use the commands:

```
awplus# configure terminal
awplus(config)# ssh server 2200
```

To force the Secure Shell server to support SSHv2 only, use the commands:

```
awplus# configure terminal
awplus(config)# ssh server v2only
```

To support both SSHv2 and SSHv1, use the commands:

```
awplus# configure terminal
awplus(config)# ssh server v1v2
```

Related Commands

show ssh server

ssh client

ssh server allow-users

Overview This command adds a username pattern to the allow list of the SSH server. If the user of an incoming SSH session matches the pattern, the session is accepted.

When there are no registered users in the server's database of allowed users, the SSH server does not accept SSH sessions even when enabled.

SSH server also maintains the deny list. The server checks the user in the deny list first. If a user is listed in the deny list, then the user access is denied even if the user is listed in the allow list.

The **no** variant of this command deletes a username pattern from the allow list of the SSH server. To delete an entry from the allow list, the username and hostname pattern should match exactly with the existing entry.

Syntax

```
ssh server allow-users <username-pattern> [<hostname-pattern>]
no ssh server allow-users <username-pattern>
[<hostname-pattern>]
```

Parameter	Description
<username-pattern>	The username pattern that users can match to. An asterisk acts as a wildcard character that matches any string of characters.
<hostname-pattern>	The host name pattern that hosts can match to. If specified, the server allows the user to connect only from hosts matching the pattern. An asterisk acts as a wildcard character that matches any string of characters.

Mode Global Configuration

Examples To allow the user `john` to create an SSH session from any host, use the commands:

```
awplus# configure terminal
awplus(config)# ssh server allow-users john
```

To allow the user `john` to create an SSH session from a range of IP address (from 192.168.1.1 to 192.168.1.255), use the commands:

```
awplus# configure terminal
awplus(config)# ssh server allow-users john 192.168.1.*
```

To allow the user `john` to create a SSH session from `a-company.com` domain, use the commands:

```
awplus# configure terminal
awplus(config)# ssh server allow-users john *.a-company.com
```

To delete the existing user entry `john 192.168.1.*` in the allow list, use the commands:

```
awplus# configure terminal
awplus(config)# no ssh server allow-users john 192.168.1.*
```

Related Commands

show running-config ssh

show ssh server allow-users

ssh server deny-users

ssh server authentication

Overview This command enables RSA public-key or password user authentication for SSH Server. Apply the **password** keyword with the **ssh server authentication** command to enable password authentication for users. Apply the **publickey** keyword with the **ssh server authentication** command to enable RSA public-key authentication for users.

Use the **no** variant of this command to disable RSA public-key or password user authentication for SSH Server. Apply the **password** keyword with the **no ssh authentication** command to disable password authentication for users. Apply the required **publickey** keyword with the **no ssh authentication** command to disable RSA public-key authentication for users.

Syntax

```
ssh server authentication {password|publickey}
no ssh server authentication {password|publickey}
```

Parameter	Description
`password`	Specifies user password authentication for SSH server.
`publickey`	Specifies user publickey authentication for SSH server.

Default Both RSA public-key authentication and password authentication are enabled by default.

Mode Global Configuration

Usage For password authentication to authenticate a user, password authentication for a user must be registered in the local user database or on an external RADIUS server, before using the **ssh server authentication password** command.

For RSA public-key authentication to authenticate a user, a public key must be added for the user, before using the **ssh server authentication publickey** command.

Examples To enable `password` authentication for users connecting through SSH, use the commands:

```
awplus# configure terminal
awplus(config)# ssh server authentication password
```

To enable `publickey` authentication for users connecting through SSH, use the commands:

```
awplus# configure terminal
awplus(config)# ssh server authentication publickey
```

To disable `password` authentication for users connecting through SSH, use the commands:

```
awplus# configure terminal
awplus(config)# no ssh server authentication password
```

To disable `publickey` authentication for users connecting through SSH, use the commands:

```
awplus# configure terminal
awplus(config)# no ssh server authentication publickey
```

Related Commands

crypto key pubkey-chain userkey

service ssh

show ssh server

ssh server deny-users

Overview This command adds a username pattern to the deny list of the SSH server. If the user of an incoming SSH session matches the pattern, the session is rejected.

SSH server also maintains the allow list. The server checks the user in the deny list first. If a user is listed in the deny list, then the user access is denied even if the user is listed in the allow list.

If a hostname pattern is specified, the user is denied from the hosts matching the pattern.

The **no** variant of this command deletes a username pattern from the deny list of the SSH server. To delete an entry from the deny list, the username and hostname pattern should match exactly with the existing entry.

Syntax

```
ssh server deny-users <username-pattern> [<hostname-pattern>]
no ssh server deny-users <username-pattern>
[<hostname-pattern>]
```

Parameter	Description
<username-pattern>	The username pattern that users can match to. The username must begin with a letter. Valid characters are all numbers, letters, and the underscore, hyphen, full stop and asterisk symbols. An asterisk acts as a wildcard character that matches any string of characters.
<hostname-pattern>	The host name pattern that hosts can match to. If specified, the server denies the user only when they connect from hosts matching the pattern. An asterisk acts as a wildcard character that matches any string of characters.

Mode Global Configuration

Examples To deny the user `john` to access SSH login from any host, use the commands:

```
awplus# configure terminal
awplus(config)# ssh server deny-users john
```

To deny the user john to access SSH login from a range of IP address (from 192.168.2.1 to 192.168.2.255), use the commands:

```
awplus# configure terminal
awplus(config)# ssh server deny-users john 192.168.2.*
```

To deny the user `john` to access SSH login from `b-company.com` domain, use the commands:

```
awplus# configure terminal
awplus(config)# ssh server deny-users john*.b-company.com
```

To delete the existing user entry `john 192.168.2.*` in the deny list, use the commands:

```
awplus# configure terminal
awplus(config)# no ssh server deny-users john 192.168.2.*
```

Related Commands

show running-config ssh

show ssh server deny-users

ssh server allow-users

ssh server max-auth-tries

Overview Use this command to specify the maximum number of SSH authentication attempts that the device will allow.

Use the **no** variant of this command to return the maximum number of attempts to its default value of 6.

Syntax

```
ssh server max-auth-tries <1-32>
no ssh server max-auth-tries
```

Parameter	Description
<1-32>	Maximum number of SSH authentication attempts the device will allow.

Default 6 attempts

Mode Global Configuration

Usage By default, users must wait one second after a failed login attempt before trying again. You can increase this gap by using the command aaa login fail-delay.

Example To set the maximum number of SSH authentication attempts to 3, use the commands:

```
awplus# configure terminal
awplus(config)# ssh server max-auth-tries 3
```

Related Commands show ssh server

ssh server resolve-host

Overview This command enables resolving an IP address from a host name using a DNS server for client host authentication.

The **no** variant of this command disables this feature.

Syntax

```
ssh server resolve-hosts
no ssh server resolve-hosts
```

Default This feature is disabled by default.

Mode Global Configuration

Usage Your device has a DNS Client that is enabled automatically when you add a DNS server to your device. Use the ip name-server command to add a DNS server to the list of servers that the device queries.

Example To resolve a host name using a DNS server, use the commands:

```
awplus# configure terminal
awplus(config)# ssh server resolve-hosts
```

Related Commands

ip name-server

show ssh server

ssh server allow-users

ssh server deny-users

ssh server scp

Overview This command enables the Secure Copy (SCP) service on the SSH server. Once enabled, the server accepts SCP requests from remote clients.

You must enable the SSH server as well as this service before the device accepts SCP connections. The SCP service is enabled by default as soon as the SSH server is enabled.

The **no** variant of this command disables the SCP service on the SSH server. Once disabled, SCP requests from remote clients are rejected.

Syntax

```
ssh server scp
no ssh server scp
```

Mode Global Configuration

Examples To enable the SCP service, use the commands:

```
awplus# configure terminal
awplus(config)# ssh server scp
```

To disable the SCP service, use the commands:

```
awplus# configure terminal
awplus(config)# no ssh server scp
```

Related Commands show running-config ssh

show ssh server

ssh server sftp

Overview This command enables the Secure FTP (SFTP) service on the SSH server. Once enabled, the server accepts SFTP requests from remote clients.

You must enable the SSH server as well as this service before the device accepts SFTP connections. The SFTP service is enabled by default as soon as the SSH server is enabled. If the SSH server is disabled, SFTP service is unavailable.

The **no** variant of this command disables SFTP service on the SSH server. Once disabled, SFTP requests from remote clients are rejected.

Syntax

```
ssh server sftp
no ssh server sftp
```

Mode Global Configuration

Examples To enable the SFTP service, use the commands:

```
awplus# configure terminal
awplus(config)# ssh server sftp
```

To disable the SFTP service, use the commands:

```
awplus# configure terminal
awplus(config)# no ssh server sftp
```

Related Commands show running-config ssh

show ssh server

undebug ssh client

Overview This command applies the functionality of the **no** debug ssh client command.

undebug ssh server

Overview This command applies the functionality of the **no** debug ssh server command.

54 Trigger Commands

Introduction

Overview

This chapter provides an alphabetical reference for commands used to configure Triggers. For more information, see the Triggers Feature Overview and Configuration Guide.

For information on filtering and saving command output, see the "Getting Started with AlliedWare Plus" Feature Overview and Configuration Guide.

Command List

- "active (trigger)" on page 2535
- "day" on page 2536
- "debug trigger" on page 2538
- "description (trigger)" on page 2539
- "repeat" on page 2540
- "script" on page 2541
- "show debugging trigger" on page 2543
- "show running-config trigger" on page 2544
- "show trigger" on page 2545
- "test" on page 2550
- "time (trigger)" on page 2551
- "trap" on page 2553
- "trigger" on page 2554
- "trigger activate" on page 2555
- "type atmf node" on page 2556
- "type cpu" on page 2559
- "type interface" on page 2560
- "type memory" on page 2561

- "type periodic" on page 2562
- "type ping-poll" on page 2563
- "type reboot" on page 2564
- "type time" on page 2565
- "type usb" on page 2566
- "undebug trigger" on page 2567

active (trigger)

Overview This command enables a trigger. This allows the trigger to activate when its trigger conditions are met.

The **no** variant of this command disables a trigger. While in this state the trigger cannot activate when its trigger conditions are met.

Syntax

```
active
no active
```

Mode Trigger Configuration

Usage Configure a trigger first before you use this command to activate it.

For information about configuring a trigger, see the Triggers Feature Overview and Configuration Guide.

Examples To enable trigger 172, so that it can activate when its trigger conditions are met, use the commands:

```
awplus# configure terminal
awplus(config)# trigger 172
awplus(config-trigger)# active
```

To disable trigger 182, preventing it from activating when its trigger conditions are met, use the commands:

```
awplus# configure terminal
awplus(config)# trigger 182
awplus(config-trigger)# no active
```

Related Commands show trigger

trigger

day

Overview This command specifies the days or date that the trigger can activate on. You can specify one of:

- A specific date
- A specific day of the week
- A list of days of the week
- every day

By default, the trigger can activate on any day.

Syntax

```
day every-day
day <1-31> <month> <2000-2035>
day <weekday>
```

Parameter	Description
`every-day`	Sets the trigger so that it can activate on any day.
<1-31>	Day of the month the trigger is permitted to activate on.
<month>	Sets the month that the trigger is permitted to activate on. Valid keywords are: **january, february, march, april, may, june, july, august, september, october, november**, and **december**.
<2000-2035>	Sets the year that the trigger is permitted to activate in.
<weekday>	Sets the days of the week that the trigger can activate on. You can specify one or more week days in a space separated list. Valid keywords are: **monday, tuesday, wednesday, thursday, friday, saturday**, and **sunday**.

Default **every-day**, so by default, the trigger can activate on any day.

Mode Trigger Configuration

Usage For example trigger configurations that use the **day** command, see "Restrict Internet Access" and "Turn off Power to Port LEDs" in the Triggers Feature Overview and Configuration Guide.

Examples To permit trigger 55 to activate on the 1 October 2016, use the commands:

```
awplus# configure terminal
awplus(config)# trigger 55
awplus(config-trigger)# day 1 oct 2016
```

To permit trigger 12 to activate on a Mondays, Wednesdays and Fridays, use the commands:

```
awplus# configure terminal
awplus(config)# trigger 12
awplus(config-trigger)# day monday wednesday friday
```

Related Commands

show trigger

trigger

debug trigger

Overview This command enables trigger debugging. This generates detailed messages about how your device is processing the trigger commands and activating the triggers.

The **no** variant of this command disables trigger debugging.

Syntax

```
debug trigger
no debug trigger
```

Mode Privilege Exec

Examples To start trigger debugging, use the command:

```
awplus# debug trigger
```

To stop trigger debugging, use the command:

```
awplus# no trigger
```

Related Commands

show debugging trigger

show trigger

test

trigger

undebug trigger

description (trigger)

Overview This command adds an optional description to help you identify the trigger. This description is displayed in show command outputs and log messages.

The **no** variant of this command removes a trigger's description. The show command outputs and log messages stop displaying a description for this trigger.

Syntax

```
description <description>
no description
```

Parameter	Description
<description>	A word or phrase that uniquely identifies this trigger or its purpose. Valid characters are any printable character and spaces, up to a maximum of 40 characters.

Mode Trigger Configuration

Examples To give trigger 240 the description `daily status report`, use the commands:

```
awplus# configure terminal
awplus(config)# trigger 240
awplus(config-trigger)# description daily status report
```

To remove the description from trigger `36`, use the commands:

```
awplus# configure terminal
awplus(config)# trigger 36
awplus(config-trigger)# no description
```

Related Commands

show trigger

test

trigger

repeat

Overview This command specifies the number of times that a trigger is permitted to activate. This allows you to specify whether you want the trigger to activate:

- only the first time that the trigger conditions are met
- a limited number of times that the trigger conditions are met
- an unlimited number of times

Once the trigger has reached the limit set with this command, the trigger remains in your configuration but cannot be activated. Use the **repeat** command again to reset the trigger so that it is activated when its trigger conditions are met.

By default, triggers can activate an unlimited number of times. To reset a trigger to this default, specify either **yes** or **forever**.

Syntax

```
repeat {forever|no|once|yes|<1-4294967294>}
```

Parameter	Description
`yes|forever`	The trigger repeats indefinitely, or until disabled.
`no|once`	The trigger activates only once.
<1-4292967294>	The trigger repeats the specified number of times.

Mode Trigger Configuration

Examples To allow trigger `21` to activate only once, use the commands:

```
awplus# configure terminal
awplus(config)# trigger 21
awplus(config-trigger)# repeat no
```

To allow trigger `22` to activate an unlimited number of times whenever its trigger conditions are met, use the commands:

```
awplus# configure terminal
awplus(config)# trigger 22
awplus(config-trigger)# repeat forever
```

To allow trigger `23` to activate only the first `10` times the conditions are met, use the commands:

```
awplus# configure terminal
awplus(config)# trigger 23
awplus(config-trigger)# repeat 10
```

Related Commands show trigger

trigger

script

Overview This command specifies one or more scripts that are to be run when the trigger activates. You can add up to five scripts to a single trigger.

The sequence in which the trigger runs the scripts is specified by the number you set before the name of the script file. One script is executed completely before the next script begins.

Scripts may be either ASH shell scripts, indicated by a **.sh** filename extension suffix, or AlliedWare Plus™ scripts, indicated by a **.scp** filename extension suffix. AlliedWare Plus™ scripts only need to be readable.

The **no** variant of this command removes one or more scripts from the trigger's script list. The scripts are identified by either their name, or by specifying their position in the script list. The **all** parameter removes all scripts from the trigger.

Syntax

```
script <1-5> {<filename>}
no script {<1-5>|<filename>|all}
```

Parameter	Description
<1-5>	The position of the script in execution sequence. The trigger runs the lowest numbered script first.
<filename>	The path to the script file.

Mode Trigger Configuration

Examples To configure trigger 71 to run the script flash:/cpu_trig.sh in position 3 when the trigger activates, use the commands:

```
awplus# configure terminal
awplus(config)# trigger 71
awplus(config-trigger)# script 3 flash:/cpu_trig.sh
```

To configure trigger 99 to run the scripts **flash:reconfig.scp**, **flash:cpu_trig.sh** and **flash:email.scp** in positions 2, 3 and 5 when the trigger activates, use the following commands:

```
awplus# configure terminal
awplus(config)# trigger 99
awplus(config-trigger)# script 2 flash:/reconfig.scp 3
flash:/cpu_trig.sh 5 flash:/email.scp
```

To remove the scripts 1, 3 and 4 from trigger 71's script list, use the commands:

```
awplus# configure terminal
awplus(config)# trigger 71
awplus(config-trigger)# no script 1 3 4
```

To remove the script flash:/cpu_trig.sh from trigger 71's script list, use the commands:

```
awplus# configure terminal
awplus(config)# trigger 71
awplus(config-trigger)# no script flash:/cpu_trig.sh
```

To remove all the scripts from trigger 71's script list, use the commands:

```
awplus# configure terminal
awplus(config)# trigger 71
awplus(config-trigger)# no script all
```

Related Commands

show trigger

trigger

show debugging trigger

Overview This command displays the current status for trigger utility debugging. Use this command to show when trigger debugging has been turned on or off from the debug trigger command.

Syntax

```
show debugging trigger
```

Mode User Exec and Privileged Exec

Example To display the current configuration of trigger debugging, use the command:

```
awplus# show debugging trigger
```

Output Figure 54-1: Example output from the **show debugging trigger** command

```
awplus#debug trigger
awplus#show debugging trigger
Trigger debugging status:
  Trigger debugging is on

awplus#no debug trigger
awplus#show debugging trigger
Trigger debugging status:
  Trigger debugging is off
```

Related Commands debug trigger

show running-config trigger

Overview This command displays the current running configuration of the trigger utility.

Syntax

```
show running-config trigger
```

Mode Privileged Exec

Example To display the current configuration of the trigger utility, use the command:

```
awplus# show running-config trigger
```

Figure 54-2: Example output from the **show running-config trigger** command

```
 trigger 1
  type card in

type usb in
 trigger 2

type usb out
 !
```

Related Commands show trigger

show trigger

Overview This command displays configuration and diagnostic information about the triggers configured on the device. Specify the **show trigger** command without any options to display a summary of the configuration of all triggers.

Syntax

```
show trigger [<1-250>|counter|full]
```

Parameter	Description
<1-250>	Displays detailed information about a specific trigger, identified by its trigger ID.
`counter`	Displays statistical information about all triggers.
`full`	Displays detailed information about all triggers.

Mode Privileged Exec

Example To get summary information about all triggers, use the following command:

```
awplus# show trigger
```

Table 1: Example output from the **show trigger** command

```
awplus#show trigger
TR# Type & Details       Name                 Ac Te Tr Repeat     #Scr Days/Date
-------------------------------------------------------------------------------
003 CPU (80% any)        Busy CPU             Y  N  Y  5           1   smtwtfs
005 Periodic (30 min)    Regular status check Y  N  N  Continuous  1   -mtwtf-
007 Memory (85% up)      High mem usage       Y  N  Y  8           1   smtwtfs
011 Time (00:01)         Weekend access       Y  N  Y  Continuous  1   ------s
013 Reboot                                    Y  N  Y  Continuous  2   smtwtfs
017 Interface (vlan1 ... Change config for... Y  N  Y  Once        1   2-apr-2016
019 Ping-poll (5 up)     Connection to svr1   Y  N  Y  Continuous  1   smtwtfs
-------------------------------------------------------------------------------
```

Table 2: Parameters in the output of the **show trigger** command

Parameter	Description
`TR#`	Trigger identifier (ID).
`Type & Details`	The trigger type, followed by the trigger details in brackets.
`Name`	Descriptive name of the trigger configured with the description (trigger) command.
`Ac`	Whether the trigger is active (Y), or inactive (N).

Table 2: Parameters in the output of the **show trigger** command (cont.)

Parameter	Description
Te	Whether the trigger is in test mode (Y) or not (N).
Tr	Whether or not the trigger is enabled to send SNMP traps. See the trap command.
Repeat	Whether the trigger repeats continuously, and if not, the configured repeat count for the trigger. To see the number of times a trigger has activated, use the show trigger <1-250> command.
#Scr	Number of scripts associated with the trigger.
Days/Date	Days or date when the trigger may be activated. For the days options, the days are shown as a seven character string representing Sunday to Saturday. A hyphen indicates days when the trigger cannot be activated.

To display detailed information about trigger 3, use the command:

```
awplus# show trigger 3
```

Figure 54-3: Example output from the **show trigger** command for a specific trigger

```
awplus#show trigger 3
Trigger Configuration Details
-------------------------------------------------------------
Trigger ..................... 3
Description ................. display cpu usage when pass 80%
Type and details ............ CPU (80% up)
Days ........................ 26-oct-2016
After ....................... 00:00:00
Before ...................... 23:59:59
Active ...................... Yes
Test ........................ No
Trap ........................ Yes
Repeat ...................... 123 (0)
Modified .................... Tue Oct 25 02:26:03 2016
Number of activations ....... 0
Last activation ............. not activated
Number of scripts ........... 1
  1. shocpu.scp
  2. <not configured>
  3. <not configured>
  4. <not configured>
  5. <not configured>
-------------------------------------------------------------
```

To display detailed information about all triggers, use the command:

```
awplus# show trigger full
```

Table 3: Example output from the **show trigger full** command

```
awplus#show trigger full
Trigger Configuration Details
-------------------------------------------------------------
 Trigger ..................... 1
 Description ................. <no description>
 Type and details ............ USB (in)
 Days ........................ smtwtfs
 After ....................... 00:00:00
 Before ...................... 23:59:59
 Active ...................... Yes
 Test ........................ No
 Trap ........................ Yes
 Repeat ...................... Continuous
 Modified .................... Tue Oct 25 14:43:50 2016
 Number of activations ....... 0
 Last activation ............. not activated
 Number of scripts ........... 0
   1. <not configured>
   2. <not configured>
   3. <not configured>
   4. <not configured>
   5. <not configured>

 Trigger ..................... 2
 Description ................. <no description>
 Type and details ............ USB (out)
 Days ........................ smtwtfs
 After ....................... 00:00:00
 Before ...................... 23:59:59
 Active ...................... Yes
 Test ........................ No
 Trap ........................ Yes
 Repeat ...................... Continuous
 Modified .................... Tue Oct 25 14:45:56 2016
 Number of activations ....... 0
 Last activation ............. not activated
 Number of scripts ........... 0
   1. <not configured>
   2. <not configured>
   3. <not configured>
   4. <not configured>
   5. <not configured>
```

Table 4: Parameters in the output of the s**how trigger full** and **show trigger** commands for a specific trigger

Parameter	Description
`Trigger`	The ID of the trigger.
`Description`	Descriptive name of the trigger.

Table 4: Parameters in the output of the s**how trigger full** and **show trigger** commands for a specific trigger (cont.)

Parameter	Description
`Type and details`	The trigger type and its activation conditions.
`Days`	The days on which the trigger is permitted to activate.
`Date`	The date on which the trigger is permitted to activate. Only displayed if configured, in which case it replaces "Days".
`Active`	Whether or not the trigger is permitted to activate.
`Test`	Whether or not the trigger is operating in diagnostic mode.
`Trap`	Whether or not the trigger is enabled to send SNMP traps.
`Repeat`	Whether the trigger repeats an unlimited number of times (Continuous) or for a set number of times. When the trigger can repeat only a set number of times, then the number of times the trigger has been activated is displayed in brackets.
`Modified`	The date and time of the last time that the trigger was modified.
`Number of activations`	Number of times the trigger has been activated since the last restart of the device.
`Last activation`	The date and time of the last time that the trigger was activated.
`Number of scripts`	How many scripts are associated with the trigger, followed by the names of the script files in the order in which they run.

To display counter information about all triggers use the command:

```
awplus# show trigger counter
```

Figure 54-4: Example output from the **show trigger counter** command

```
awplus#show trigger counter
Trigger Module Counters
-------------------------------------------------------
Trigger activations ........................... 0
Time triggers activated today ................. 0
Periodic triggers activated today ............. 0
Interface triggers activated today ............ 0
Resource triggers activated today ............. 0
Reboottriggers activated today ................ 0
Ping-poll triggers activated today ............ 0
-------------------------------------------------------
```

Table 5: Parameters in the output of the **show trigger counter** command

Parameter	Description
`Trigger activations`	Number of times a trigger has been activated.
`Time triggers activated today`	Number of times a time trigger has been activated today.
`Periodic triggers activated today`	Number of times a periodic trigger has been activated today.
`Interface triggers activated today`	Number of times an interface trigger has been activated today.
`Resource triggers activated today`	Number of times a CPU or memory resource trigger has been activated today.
`Ping-poll triggers activated today`	Number of times a ping-poll trigger has been activated today.

Related Commands trigger

test

Overview This command puts the trigger into a diagnostic mode. In this mode the trigger may activate but when it does it will not run any of the trigger's scripts. A log message will be generated to indicate when the trigger has been activated.

The **no** variant of this command takes the trigger out of diagnostic mode, restoring normal operation. When the trigger activates the scripts associated with the trigger will be run, as normal.

Syntax

```
test
no test
```

Mode Trigger Configuration

Usage Configure a trigger first before you use this command to diagnose it. For information about configuring a trigger, see the Triggers Feature Overview and Configuration Guide.

Examples To put trigger 5 into diagnostic mode, where no scripts will be run when the trigger activates, use the commands:

```
awplus# configure terminal
awplus(config)# trigger 5
awplus(config-trigger)# test
```

To take trigger 205 out of diagnostic mode, restoring normal operation, use the commands:

```
awplus# configure terminal
awplus(config)# trigger 205
awplus(config-trigger)# no test
```

Related Commands show trigger

trigger

time (trigger)

Overview This command specifies the time of day when the trigger is permitted to activate. The after parameter specifies the start of a time period that extends to midnight during which trigger may activate. By default the value of this parameter is 00:00:00 (am); that is, the trigger may activate at any time. The **before** parameter specifies the end of a time period beginning at midnight during which the trigger may activate. By default the value of this parameter is 23:59:59; that is, the trigger may activate at any time. If the value specified for **before** is later than the value specified for **after**, a time period from **"** after **"** to **"** before **"** is defined, during which the trigger may activate. This command is not applicable to time triggers (**type time**).

The following figure illustrates how the **before** and **after** parameters operate.

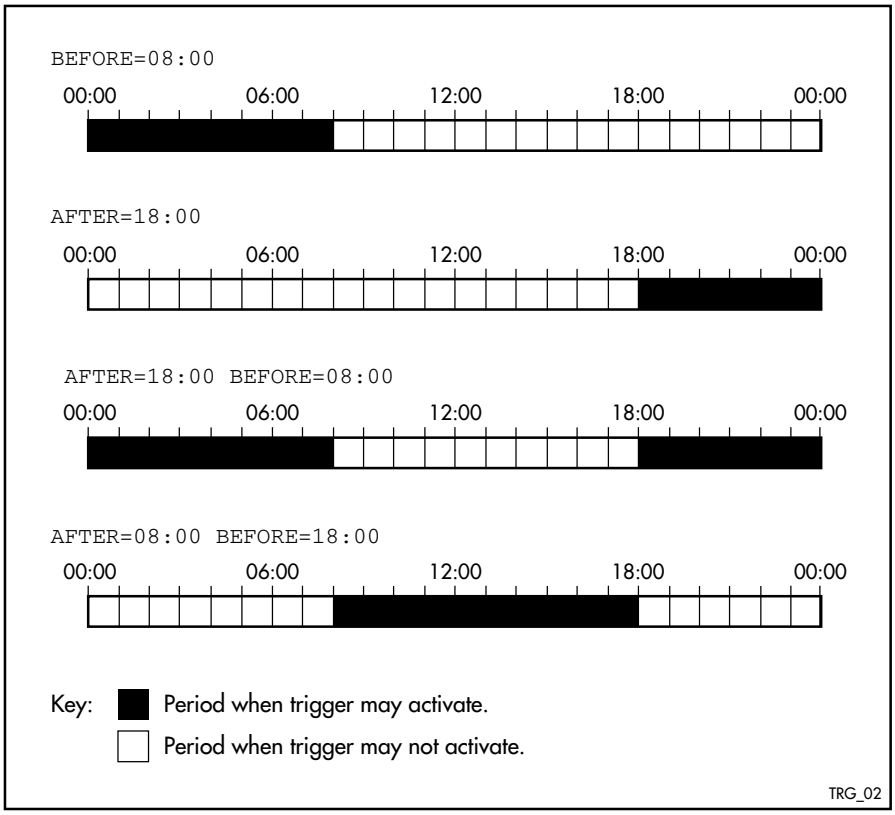

Syntax `time {[after <hh:mm:ss>] [before <hh:mm:ss>]}`

Parameter	Description
`after<hh:mm:ss>`	The earliest time of day when the trigger may be activated.
`before<hh:mm:ss>`	The latest time of day when the trigger may be activated.

Mode Trigger Configuration

Usage For example trigger configurations that use the **time (trigger)** command, see "Restrict Internet Access" and "Turn off Power to Port LEDs" in the Triggers Feature Overview and Configuration Guide.

Examples To allow trigger `63` to activate between midnight and 10:30am, use the commands:

```
awplus# configure terminal
awplus(config)# trigger 63
awplus(config-trigger)# time before 10:30:00
```

To allow trigger `64` to activate between 3:45pm and midnight, use the commands:

```
awplus# configure terminal
awplus(config)# trigger 64
awplus(config-trigger)# time after 15:45:00
```

To allow trigger `65` to activate between 10:30am and 8:15pm, use the commands:

```
awplus# configure terminal
awplus(config)# trigger 65
awplus(config-trigger)# time after 10:30:00 before 20:15:00
```

Related Commands show trigger

trigger

trap

Overview This command enables the specified trigger to send SNMP traps.

Use the **no** variant of this command to disable the sending of SNMP traps from the specified trigger.

Syntax

```
trap
no trap
```

Default SNMP traps are enabled by default for all defined triggers.

Mode Trigger Configuration

Usage You must configure SNMP before using traps with triggers. For more information, see:

- Support for Allied Telesis Enterprise_MIBs_in_AlliedWare Plus, for information about which MIB objects are supported.
- the SNMP Feature Overview and Configuration_Guide.
- the SNMP Commands chapter.

Since SNMP traps are enabled by default for all defined triggers, a common usage will be for the **no** variant of this command to disable SNMP traps from a specified trap if the trap is only periodic. Refer in particular to AT-TRIGGER-MIB in the Support for Allied Telesis Enterprise_MIBs_in AlliedWare Plus for further information about the relevant SNMP MIB.

Examples To enable SNMP traps to be sent from trigger 5, use the commands:

```
awplus# configure terminal
awplus(config)# trigger 5
awplus(config-trigger)# trap
```

To disable SNMP traps being sent from trigger 205, use the commands:

```
awplus# configure terminal
awplus(config)# trigger 205
awplus(config-trigger)# no trap
```

Related Commands trigger

show trigger

trigger

Overview This command is used to access the Trigger Configuration mode for the specified trigger. Once Trigger Configuration mode has been entered the trigger type information can be configured and the trigger scripts and other operational parameters can be specified. At a minimum the trigger type information must be specified before the trigger can become active.

The **no** variant of this command removes a specified trigger and all configuration associated with it.

Syntax

```
trigger <1-250>
no trigger <1-250>
```

Parameter	Description
<1-250>	A trigger ID.

Mode Global Configuration

Examples To enter trigger configuration mode for trigger `12` use the command:

```
awplus# trigger 12
```

To completely remove all configuration associated with trigger `12`, use the command:

```
awplus# no trigger 12
```

Related Commands show trigger

trigger activate

trigger activate

Overview This command is used to manually activate a specified trigger from the Privileged Exec mode, which has been configured with the **trigger** command from the Global Configuration mode.

Syntax

```
trigger activate <1-250>
```

Parameter	Description
<1-250>	A trigger ID.

Mode Privileged Exec

Usage This command manually activates a trigger without the normal trigger conditions being met.

The trigger is activated even if it is configured as inactive. The scripts associated with the trigger will be executed even if the trigger is in the diagnostic test mode.

Triggers activated manually do not have their repeat counts decremented or their 'last triggered' time updated, and do not result in updates to the '[type] triggers today' counters.

Example To manually activate trigger `12` use the command:

```
awplus# trigger activate 12
```

Related Commands show trigger

trigger

type atmf node

Overview This command configures a trigger to be activated at an AMF node join event or leave event.

Syntax

```
type atmf node {join|leave}
```

Parameter	Description
join	AMF node join event.
leave	AMF node leave event.

Mode Trigger Configuration

CAUTION: Only configure this trigger on one device because it is a network wide event.

Example 1 To configure trigger 5 to activate at an AMF node leave event, use the following commands. In this example the command is entered on node-1:

```
node1(config)# trigger 5
node1(config-trigger) type atmf node leave
```

Example 2 The following commands will configure trigger 5 to activate if an AMF node join event occurs on any node within the working set:

```
node1# atmf working-set group all
```

This command returns the following display:

```
====================
node1, node2, node3:
====================

Working set join
```

Note that the running the above command changes the prompt from the name of the local node, to the name of the AMF-Network followed, in square brackets, by the number of member nodes in the working set.

```
AMF-Net[3]# conf t
AMF-Net[3](config)# trigger 5
AMF-Net[3](config-trigger)# type atmf node leave
AMF-Net[3](config-trigger)# description "E-mail on AMF Exit"
AMF-Net[3](config-trigger)# active
```

Enter the name of the script to run at the trigger event.

```
AMF-Net[3](config-trigger)# script 1 email_me.scp
AMF-Net[3](config-trigger)# end
```

Display the trigger configurations

```
AMF-Net[3]# show trigger
```

This command returns the following display:

```
=======
node1:
=======

TR# Type & Details     Description          Ac Te Tr Repeat     #Scr Days/Date
-------------------------------------------------------------------------------
001 Periodic (2 min)   Periodic Status Chk  Y  N  Y Continuous  1   smtwtfs
005 ATMF node (leave)  E-mail on ATMF Exit  Y  N  Y Continuous  1   smtwtfs
-------------------------------------------------------------------------------

==============
Node2, Node3,
==============

TR# Type & Details     Description          Ac Te Tr Repeat     #Scr Days/Date
-------------------------------------------------------------------------------
005 ATMF node (leave)  E-mail on ATMF Exit  Y  N  Y Continuous  1   smtwtfs
-------------------------------------------------------------------------------
```

Display the triggers configured on each of the nodes in the AMF Network.

```
AMF-Net[3]# show running-config trigger
```

This command returns the following display:

```
========
Node1:
========

trigger 1
 type periodic 2
 script 1 atmf.scp
trigger 5
 type atmf node leave
description "E-mail on ATMF Exit"
 script 1 email_me.scp
!

============
Node2, Node3:
============

trigger 5
 type atmf node leave
description "E-mail on ATMF Exit"
 script 1 email_me.scp
!
```

Related Commands show trigger

type cpu

Overview This command configures a trigger to activate based on CPU usage level. Selecting the **up** option causes the trigger to activate when the CPU usage exceeds the specified usage level. Selecting the **down** option causes the trigger to activate when CPU usage drops below the specified usage level. Selecting **any** causes the trigger to activate in both situations. The default is **any**.

Syntax

```
type cpu <1-100> [up|down|any]
```

Parameter	Description
<1-100>	The percentage of CPU usage at which to trigger.
`up`	Activate when CPU usage exceeds the specified level.
`down`	Activate when CPU usage drops below the specified level
`any`	Activate when CPU usage passes the specified level in either direction

Mode Trigger Configuration

Usage For an example trigger configuration that uses the **type cpu** command, see "Capture Unusual CPU and RAM Activity" in the Triggers Feature Overview and Configuration Guide.

Examples To configure trigger `28` to be a CPU trigger that activates when CPU usage exceeds 80% use the following commands:

```
awplus# configure terminal
awplus(config)# trigger 28
awplus(config-trigger)# type cpu 80 up
```

To configure trigger `5` to be a CPU trigger that activates when CPU usage either rises above or drops below 65%, use the following commands:

```
awplus# configure terminal
awplus(config)# trigger 5
awplus(config-trigger)# type cpu 65
```

or

```
awplus# configure terminal
awplus(config)# trigger 5
awplus(config-trigger)# type cpu 65 any
```

Related Commands show trigger

trigger

type interface

Overview This command configures a trigger to activate based on the link status of an interface. The trigger can be activated when the interface becomes operational by using the **up** option, or when the interface closes by using the **down** option. The trigger can also be configured to activate when either one of these events occurs by using the **any** option.

Syntax

```
type interface <interface> [up|down|any]
```

Parameter	Description
<interface>	Interface name. This can be the name of a device port, an eth-management port, or a VLAN.
`up`	Activate when interface becomes operational.
`down`	Activate when the interface closes.
`any`	Activate when any interface link status event occurs.

Mode Trigger Configuration

Example To configure trigger `19` to be an interface trigger that activates when `port1.0.2` becomes operational, use the following commands:

```
awplus# configure terminal
awplus(config)# trigger 19
awplus(config-trigger)# type interface port1.0.2 up
```

Related Commands

show trigger

trigger

type memory

Overview This command configures a trigger to activate based on RAM usage level. Selecting the **up** option causes the trigger to activate when memory usage exceeds the specified level. Selecting the **down** option causes the trigger to activate when memory usage drops below the specified level. Selecting **any** causes the trigger to activate in both situations. The default is **any**.

Syntax

```
type memory <1-100> [up|down|any]
```

Parameter	Description
<1-100>	The percentage of memory usage at which to trigger.
`up`	Activate when memory usage exceeds the specified level.
`down`	Activate when memory usage drops below the specified level.
`any`	Activate when memory usage passes the specified level in either direction.

Mode Trigger Configuration

Examples To configure trigger `12` to be a memory trigger that activates when memory usage exceeds 50% use the following commands:

```
awplus# configure terminal
awplus(config)# trigger 12
awplus(config-trigger)# type memory 50 up
```

To configure trigger `40` to be a memory trigger that activates when memory usage either rises above or drops below 65%, use the following commands:

```
awplus# configure terminal
awplus(config)# trigger 40
awplus(config-trigger)# type memory 65
```

or

```
awplus# configure terminal
awplus(config)# trigger 40
awplus(config-trigger)# type memory 65 any
```

Related Commands show trigger

trigger

type periodic

Overview This command configures a trigger to be activated at regular intervals. The time period between activations is specified in minutes.

Syntax

```
type periodic <1-1440>
```

Parameter	Description
<1-1440>	The number of minutes between activations.

Mode Trigger Configuration

Usage A combined limit of 10 triggers of the type periodic and time can be configured. If you attempt to add more than 10 triggers the following error message is displayed:

```
% Cannot configure more than 10 triggers with the type time or
periodic
```

For an example trigger configuration that uses the **type periodic** command, see "See Daily Statistics" in the Triggers Feature Overview and Configuration Guide.

Example To configure trigger `44` to activate periodically at `10` minute intervals use the following commands:

```
awplus# configure terminal
awplus(config)# trigger 44
awplus(config-trigger)# type periodic 10
```

Related Commands show trigger

trigger

type ping-poll

Overview This command configures a trigger that activates when Ping Polling identifies that a target device's status has changed. This allows you to run a configuration script when a device becomes reachable or unreachable.

Syntax

```
type ping-poll <1-100> {up|down}
```

Parameter	Description
<1-100>	The ping poll ID.
`up`	The trigger activates when ping polling detects that the target is reachable.
`down`	The trigger activates when ping polling detects that the target is unreachable.

Mode Trigger Configuration

Example To configure trigger `106` to activate when ping poll `12` detects that its target device is now unreachable, use the following commands:

```
awplus# configure terminal
awplus(config)# trigger 106
awplus(config-trigger)# type ping-poll 12 down
```

Related Commands

show trigger

trigger

type reboot

Overview This command configures a trigger that activates when your device is rebooted.

Syntax

```
type reboot
```

Mode Trigger Configuration

Example To configure trigger `32` to activate when your device reboots, use the following commands:

```
awplus# configure terminal
awplus(config)# trigger 32
awplus(config-trigger)# type reboot
```

Related Commands show trigger

trigger

type time

Overview This command configures a trigger that activates at a specified time of day.

Syntax

```
type time <hh:mm>
```

Parameter	Description
<hh:mm>	The time to activate the trigger.

Mode Trigger Configuration

Usage A combined limit of 10 triggers of the type time and type periodic can be configured. If you attempt to add more than 10 triggers the following error message is displayed:

```
% Cannot configure more than 10 triggers with the type time or
periodic
```

Example To configure trigger `86` to activate at `15:53`, use the following commands:

```
awplus# configure terminal
awplus(config)# trigger 86
awplus(config-trigger)# type time 15:53
```

Related Commands

show trigger

trigger

type usb

Overview Use this command to configure a trigger that activates on either the removal or the insertion of a USB storage device.

Syntax

```
type usb {in|out}
```

Parameter	Description
in	Trigger activates on insertion of a USB storage device.
out	Trigger activates on removal of a USB storage device.

Mode Trigger Configuration

Usage USB triggers cannot execute script files from a USB storage device.

Examples To configure trigger 1 to activate on the insertion of a USB storage device, use the commands:

```
awplus# configure terminal
awplus(config)# trigger 1
awplus(config-trigger)# type usb in
```

Related Commands

trigger

show running-config trigger

show trigger

undebug trigger

Overview This command applies the functionality of the **no** debug trigger command.

55 Ping-Polling Commands

Introduction

Overview

This chapter provides an alphabetical reference for commands used to configure Ping Polling. For more information, see the Ping Polling Feature Overview and Configuration Guide.

For information on filtering and saving command output, see the "Getting Started with AlliedWare Plus" Feature Overview and Configuration Guide.

Table 55-1: The following table lists the default values when configuring a ping poll

Default	Value
Critical-interval	1 second
Description	No description
Fail-count	5
Length	32 bytes
Normal-interval	30 seconds
Sample-size	5
Source-ip	The IP address of the interface from which the ping packets are transmitted
Time-out	1 second
Up-count	30

Command List

- "active (ping-polling)" on page 2570
- "clear ping-poll" on page 2571
- "critical-interval" on page 2572
- "debug ping-poll" on page 2573

- "description (ping-polling)" on page 2574
- "fail-count" on page 2575
- "ip (ping-polling)" on page 2576
- "length (ping-poll data)" on page 2577
- "normal-interval" on page 2578
- "ping-poll" on page 2579
- "sample-size" on page 2580
- "show counter ping-poll" on page 2582
- "show ping-poll" on page 2584
- "source-ip" on page 2588
- "timeout (ping polling)" on page 2590
- "up-count" on page 2591
- "undebug ping-poll" on page 2592

active (ping-polling)

Overview This command enables a ping-poll instance. The polling instance sends ICMP echo requests to the device with the IP address specified by the ip (ping-polling) command.

By default, polling instances are disabled. When a polling instance is enabled, it assumes that the device it is polling is unreachable.

The **no** variant of this command disables a ping-poll instance. The polling instance no longer sends ICMP echo requests to the polled device. This also resets all counters for this polling instance.

Syntax

```
active
no active
```

Mode Ping-Polling Configuration

Examples To activate the ping-poll instance 43, use the commands:

```
awplus# configure terminal
awplus(config)# ping-poll 43
awplus(config-ping-poll)# active
```

To disable the ping-poll instance 43 and reset its counters, use the commands:

```
awplus# configure terminal
awplus(config)# ping-poll 43
awplus(config-ping-poll)# no active
```

Related Commands

debug ping-poll

ip (ping-polling)

ping-poll

show ping-poll

clear ping-poll

Overview This command resets the specified ping poll, or all ping poll instances. This clears the ping counters, and changes the status of polled devices to unreachable. The polling instance changes to the polling frequency specified with the critical-interval command. The device status changes to reachable once the device responses have reached the up-count.

Syntax

```
clear ping-poll {<1-100>|all}
```

Parameter	Description
<1-100>	A ping poll ID number. The specified ping poll instance has its counters cleared, and the status of the device it polls is changed to unreachable.
`all`	Clears the counters and changes the device status of all polling instances.

Mode Privileged Exec

Examples To reset the ping poll instance 12, use the command:

```
awplus# clear ping-poll 12
```

To reset all ping poll instances, use the command:

```
awplus# clear ping-poll all
```

Related Commands

active (ping-polling)

ping-poll

show ping-poll

critical-interval

Overview This command specifies the time period in seconds between pings when the polling instance has not received a reply to at least one ping, and when the device is unreachable.

This command enables the device to quickly observe changes in state, and should be set to a much lower value than the normal-interval command.

The **no** variant of this command sets the critical interval to the default of one second.

Syntax

```
critical-interval <1-65536>
no critical-interval
```

Parameter	Description
<1-65536>	Time in seconds between pings, when the device has failed to a ping, or the device is unreachable.

Default The default is 1 second.

Mode Ping-Polling Configuration

Examples To set the critical interval to 2 seconds for the ping-polling instance 99, use the commands:

```
awplus# configure terminal
awplus(config)# ping-poll 99
awplus(config-ping-poll)# critical-interval 2
```

To reset the critical interval to the default of one second for the ping-polling instance 99, use the commands:

```
awplus# configure terminal
awplus(config)# ping-poll 99
awplus(config-ping-poll)# no critical-interval
```

Related Commands

fail-count

normal-interval

sample-size

show ping-poll

timeout (ping polling)

up-count

debug ping-poll

Overview This command enables ping poll debugging for the specified ping-poll instance. This generates detailed messages about ping execution.

The **no** variant of this command disables ping-poll debugging for the specified ping-poll.

Syntax

```
debug ping-poll <1-100>
no debug ping-poll {<1-100>|all}
```

Parameter	Description
<1-100>	A unique ping poll ID number.
all	Turn off all ping-poll debugging.

Mode Privileged Exec

Examples To enable debugging for ping-poll instance 88, use the command:

```
awplus# debug ping-poll 88
```

To disable all ping poll debugging, use the command:

```
awplus# no debug ping-poll all
```

To disable debugging for ping-poll instance 88, use the command:

```
awplus# no debug ping-poll 88
```

Related Commands

active (ping-polling)

clear ping-poll

ping-poll

show ping-poll

undebug ping-poll

description (ping-polling)

Overview This command specifies a string to describe the ping-polling instance. This allows the ping-polling instance to be recognized easily in show commands. Setting this command is optional.

By default ping-poll instances do not have a description.

Use the **no** variant of this command to delete the description set.

Syntax

```
description <description>
no description
```

Parameter	Description
<description>	The description of the target. Valid characters are any printable character and spaces. There is no maximum character length.

Mode Ping-Polling Configuration

Examples To add the text “Primary Gateway” to describe the ping-poll instance 45, use the commands:

```
awplus# configure terminal
awplus(config)# ping-poll 45
awplus(config-ping-poll)# description Primary Gateway
```

To delete the description set for the ping-poll instance 45, use the commands:

```
awplus# configure terminal
awplus(config)# ping-poll 45
awplus(config-ping-poll)# no description
```

Related Commands ping-poll

show ping-poll

fail-count

Overview This command specifies the number of pings that must be unanswered, within the total number of pings specified by the sample-size command, for the ping-polling instance to consider the device unreachable.

If the number set by the sample-size command and the **fail-count** commands are the same, then the unanswered pings must be consecutive. If the number set by the sample-size command is greater than the number set by the **fail-count** command, then a device that does not always reply to pings may be declared unreachable.

The **no** variant of this command resets the fail count to the default.

Syntax

```
fail-count <1-100>
no fail-count
```

Parameter	Description
<1-100>	The number of pings within the sample size that a reachable device must fail to respond to before it is classified as unreachable.

Default The default is 5.

Mode Ping-Polling Configuration

Examples To specify the number of pings that must fail within the sample size to determine that a device is unreachable for ping-polling instance 45, use the commands:

```
awplus# configure terminal
awplus(config)# ping-poll 45
awplus(config-ping-poll)# fail-count 5
```

To reset the fail-count to its default of 5 for ping-polling instance 45, use the commands:

```
awplus# configure terminal
awplus(config)# ping-poll 45
awplus(config-ping-poll)# no fail-count
```

Related Commands

critical-interval

normal-interval

ping-poll

sample-size

show ping-poll

timeout (ping polling)

up-count

ip (ping-polling)

Overview This command specifies the IPv4 address of the device you are polling.

Syntax

```
ip {<ip-address>|<ipv6-address>}
```

Parameter	Description
<ip-address>	An IPv4 address in dotted decimal notation `A.B.C.D`
<ipv6-address>	An IPv6 address in hexadecimal notation `X:X::X:X`

Mode Ping-Polling Configuration

Examples To set ping-poll instance 5 to poll the device with the IP address `192.168.0.1`, use the commands:

```
awplus# configure terminal
awplus(config)# ping-poll 5
awplus(config-ping-poll)# ip 192.168.0.1
```

To set ping-poll instance 10 to poll the device with the IPv6 address `2001:db8::`, use the commands:

```
awplus# configure terminal
awplus(config)# ping-poll 10
awplus(config-ping-poll)# ip 2001:db8::
```

Related Commands

ping-poll

source-ip

show ping-poll

length (ping-poll data)

Overview This command specifies the number of data bytes to include in the data portion of the ping packet. This allows you to set the ping packets to a larger size if you find that larger packet types in your network are not reaching the polled device, while smaller packets are getting through. This encourages the polling instance to change the device's status to unreachable when the network is dropping packets of the size you are interested in.

The **no** variant of this command resets the data bytes to the default of 32 bytes.

Syntax

```
length <4-1500>
no length
```

Parameter	Description
<4-1500>	The number of data bytes to include in the data portion of the ping packet.

Default The default is 32.

Mode Ping-Polling Configuration

Examples To specify that ping-poll instance 12 sends ping packet with a data portion of 56 bytes, use the commands:

```
awplus# configure terminal
awplus(config)# ping-poll 12
awplus(config-ping-poll)# length 56
```

To reset the number of data bytes in the ping packet to the default of 32 bytes for ping- poll instance 3, use the commands:

```
awplus# configure terminal
awplus(config)# ping-poll 12
awplus(config-ping-poll)# length
```

Related Commands ping-poll

show ping-poll

normal-interval

Overview This command specifies the time period between pings when the device is reachable.

The **no** variant of this command resets the time period to the default of 30 seconds.

Syntax

```
normal-interval <1-65536>
no normal-interval
```

Parameter	Description
<1-65536>	Time in seconds between pings when the target is reachable.

Default The default is 30 seconds.

Mode Ping-Polling Configuration

Examples To specify a time period of 60 seconds between pings when the device is reachable for ping-poll instance 45, use the commands:

```
awplus# configure terminal
awplus(config)# ping-poll 45
awplus(config-ping-poll)# normal-interval 60
```

To reset the interval to the default of 30 seconds for ping-poll instance 45, use the commands:

```
awplus# configure terminal
awplus(config)# ping-poll 45
awplus(config-ping-poll)# no normal-interval
```

Related Commands

critical-interval

fail-count

ping-poll

sample-size

show ping-poll

timeout (ping polling)

up-count

ping-poll

Overview This command enters the ping-poll configuration mode. If a ping-poll exists with the specified number, then this command enters its configuration mode. If no-ping poll exists with the specified number, then this command creates a new ping poll with this ID number.

To configure a ping-poll, create a ping poll using this command, and use the ip (ping-polling) command to specify the device you want the polling instance to poll. It is not necessary to specify any further commands unless you want to change a command's default.

The **no** variant of this command deletes the specified ping poll.

Syntax

```
ping-poll <1-100>
no ping-poll <1-100>
```

Parameter	Description
<1-100>	A unique ping poll ID number.

Mode Global Configuration

Examples To create ping-poll instance 3 and enter ping-poll configuration mode, use the commands:

```
awplus# configure terminal
awplus(config)# ping-poll 3
awplus(config-ping-poll)#
```

To delete ping-poll instance 3, use the commands:

```
awplus# configure terminal
awplus(config)# no ping-poll 3
```

Related Commands

active (ping-polling)

clear ping-poll

debug ping-poll

description (ping-polling)

ip (ping-polling)

length (ping-poll data)

show ping-poll

source-ip

sample-size

Overview This command sets the total number of pings that the polling instance inspects when determining whether a device is unreachable. If the number of pings specified by the **fail-count** command go unanswered within the inspected sample, then the device is declared unreachable.

If the numbers set in this command and fail-count command are the same, the unanswered pings must be consecutive. If the number set by this command is greater than that set with the fail-count command, a device that does not always reply to pings may be declared unreachable.

You cannot set this command's value lower than the fail-count value.

The polling instance uses the number of pings specified by the up-count command to determine when a device is reachable.

The **no** variant of this command resets this command to the default.

Syntax

```
sample-size <1-100>
no sample size
```

Parameter	Description
<1-100>	Number of pings that determines critical and up counts.

Default The default is 5.

Mode Ping-Polling Configuration

Examples To set the sample-size to 50 for ping-poll instance 43, use the commands:

```
awplus# configure terminal
awplus(config)# ping-poll 43
awplus(config-ping-poll)# sample-size 50
```

To reset sample-size to the default of 5 for ping-poll instance 43, use the commands:

```
awplus# configure terminal
awplus(config)# ping-poll 43
awplus(config-ping-poll)# no sample-size
```

Related Commands

critical-interval

fail-count

normal-interval

ping-poll

show ping-poll

timeout (ping polling)

up-count

show counter ping-poll

Overview This command displays the counters for ping polling.

Syntax

```
show counter ping-poll [<1-100>]
```

Parameter	Description
<1-100>	A unique ping poll ID number. This displays the counters for the specified ping poll only. If you do not specify a ping poll, then this command displays counters for all ping polls.

Mode User Exec and Privileged Exec

Output Figure 55-1: Example output from the **show counter ping-poll** command

```
Ping-polling counters
Ping-poll: 1
PingsSent              ......... 15
PingsFailedUpState     ......... 0
PingsFailedDownState   ......... 0
ErrorSendingPing       ......... 2
CurrentUpCount         ......... 13
CurrentFailCount       ......... 0
UpStateEntered         ......... 0
DownStateEntered       ......... 0

Ping-poll: 2
PingsSent              ......... 15
PingsFailedUpState     ......... 0
PingsFailedDownState   ......... 0
ErrorSendingPing       ......... 2
CurrentUpCount         ......... 13
CurrentFailCount       ......... 0
UpStateEntered         ......... 0
DownStateEntered       ......... 0

Ping-poll: 5
PingsSent              ......... 13
PingsFailedUpState     ......... 0
PingsFailedDownState   ......... 2
ErrorSendingPing       ......... 2
CurrentUpCount         ......... 9
CurrentFailCount       ......... 0
UpStateEntered         ......... 0
DownStateEntered       ......... 0
```

Table 56: Parameters in output of the **show counter ping-poll** command

Parameter	Description
`Ping-poll`	The ID number of the polling instance.
`PingsSent`	The total number of pings generated by the polling instance.
`PingsFailedUpState`	The number of unanswered pings while the target device is in the Up state. This is a cumulative counter for multiple occurrences of the Up state.
`PingsFailedDownState`	Number of unanswered pings while the target device is in the Down state. This is a cumulative counter for multiple occurrences of the Down state.
`ErrorSendingPing`	The number of pings that were not successfully sent to the target device. This error can occur when your device does not have a route to the destination.
`CurrentUpCount`	The current number of sequential ping replies.
`CurrentFailCount`	The number of ping requests that have not received a ping reply in the current sample-size window.
`UpStateEntered`	Number of times the target device has entered the Up state.
`DownStateEntered`	Number of times the target device has entered the Down state.

Example To display counters for the polling instances, use the command:

```
awplus# show counter ping-poll
```

Related Commands

debug ping-poll

ping-poll

show ping-poll

show ping-poll

Overview This command displays the settings and status of ping polls.

Syntax `show ping-poll [<1-100>|state {up|down}] [brief]`

Parameter	Description	
<1-100>	Displays settings and status for the specified polling instance.	
`state`	Displays polling instances based on whether the device they are polling is currently reachable or unreachable.	
	`up`	Displays polling instance where the device state is reachable.
	`down`	Displays polling instances where the device state is unreachable.
`brief`	Displays a summary of the state of ping polls, and the devices they are polling.	

Mode User Exec and Privileged Exec

Output Figure 55-2: Example output from the **show ping-poll brief** command

```
Ping Poll Configuration
-------------------------------------------------------
Id Enabled State Destination
-------------------------------------------------------
1  Yes     Down  192.168.0.1
2  Yes     Up    192.168.0.100
```

Table 57: Parameters in output of the **show ping-poll brief** command

Parameter	Meaning
Id	The ID number of the polling instance, set when creating the polling instance with the ping-poll command.
Enabled	Whether the polling instance is enabled or disabled.

Table 57: Parameters in output of the **show ping-poll brief** command (cont.)

Parameter	Meaning	
State	The current status of the device being polled:	
	Up	The device is reachable.
	Down	The device is unreachable.
	Critical Up	The device is reachable but recently the polling instance has not received some ping replies, so the polled device may be going down.
	Critical Down	The device is unreachable but the polling instance received a reply to the last ping packet, so the polled device may be coming back up.
Destination	The IP address of the polled device, set with the ip (ping-polling) command.	

Figure 55-3: Example output from the **show ping-poll** command

```
Ping Poll Configuration
---------------------------------------------------------

Poll 1:
Description                         : Primary Gateway
Destination IP address              : 192.168.0.1
Status                              : Down
Enabled                             : Yes
Source IP address                   : 192.168.0.10
Critical interval                   : 1
Normal interval                     : 30
Fail count                          : 10
Up count                            : 5
Sample size                         : 50
Length                              : 32
Timeout                             : 1
Debugging                           : Enabled
```

```
Poll 2:
Description                          : Secondary Gateway
Destination IP address               : 192.168.0.100
Status                               : Up
Enabled                              : Yes
Source IP address                    : Default
Critical interval                    : 5
Normal interval                      : 60
Fail count                           : 20
Up count                             : 30
Sample size                          : 100
Length                               : 56
Timeout                              : 2
Debugging    : Enabled
```

Table 58: Parameters in output of the **show ping-poll** command

Parameter	Description	
Description	Optional description set for the polling instance with the description (ping-polling) command.	
Destination IP address	The IP address of the polled device, set with the ip (ping-polling) command.	
Status	The current status of the device being polled:	
	Up	The device is reachable.
	Down	The device is unreachable.
	Critical Up	The device is reachable but recently the polling instance has not received some ping replies, so the polled device may be going down.
	Critical Down	The device is unreachable but the polling instance received a reply to the last ping packet, so the polled device may be coming back up.
Enabled	Whether the polling instance is enabled or disabled. The active (ping-polling) and active (ping-polling) commands enable and disable a polling instance.	
Source IP address	The source IP address sent in the ping packets. This is set using the source-ip command.	
Critical interval	The time period in seconds between pings when the polling instance has not received a reply to at least one ping, and when the device is unreachable. This is set with the critical-interval command.	
Normal interval	The time period between pings when the device is reachable. This is set with the normal-interval command.	

Table 58: Parameters in output of the **show ping-poll** command (cont.)

Parameter	Description
`Fail count`	The number of pings that must be unanswered, within the total number of pings specified by the sample-size command, for the polling instance to consider the device unreachable. This is set using the fail-count command.
`Up count`	The number of consecutive pings that the polling instance must receive a reply to before classifying the device reachable again. This is set using the up-count command.
`Sample size`	The total number of pings that the polling instance inspects when determining whether a device is unreachable. This is set using the sample-size command.
`Length`	The number of data bytes to include in the data portion of the ping packet. This is set using the length (ping-poll data) command.
`Timeout`	The time in seconds that the polling instance waits for a response to a ping packet. This is set using the timeout (ping polling) command.
`Debugging`	Indicates whether ping polling debugging is **Enabled** or **Disabled**. This is set using the debug ping-poll command.

Examples

To display the ping poll settings and the status of all the polls, use the command:

```
awplus# show ping-poll
```

To display a summary of the ping poll settings, use the command:

```
awplus# show ping-poll brief
```

To display the settings for ping poll 6, use the command:

```
awplus# show ping-poll 6
```

To display a summary of the state of ping poll 6, use the command:

```
awplus# show ping-poll 6 brief
```

To display the settings of ping polls that have reachable devices, use the command:

```
awplus# show ping-poll state up
```

To display a summary of ping polls that have unreachable devices, use the command:

```
awplus# show ping-poll 6 state down brief
```

Related Commands

debug ping-poll

ping-poll

source-ip

Overview This command specifies the source IP address to use in ping packets.

By default, the polling instance uses the address of the interface through which it transmits the ping packets. It uses the device's local interface IP address when it is set. Otherwise, the IP address of the interface through which it transmits the ping packets is used.

The **no** variant of this command resets the source IP in the packets to the device's local interface IP address.

Syntax

```
source-ip {<ip-address>|<ipv6-address>}
no source-ip
```

Parameter	Description
<ip-address>	An IPv4 address in dotted decimal notation `A.B.C.D`
<ipv6-address>	An IPv6 address in hexadecimal notation `X:X::X:X`

Mode Ping-Polling Configuration

Examples To configure the ping-polling instance 43 to use the source IP address `192.168.0.1` in ping packets, use the commands:

```
awplus# configure terminal
awplus(config)# ping-poll 43
awplus(config-ping-poll)# source-ip 192.168.0.1
```

To configure the ping-polling instance 43 to use the source IPv6 address `2001:db8::` in ping packets, use the commands:

```
awplus# configure terminal
awplus(config)# ping-poll 43
awplus(config-ping-poll)# source-ip 2001:db8::
```

To reset the source IP address to the device's local interface IP address for ping-poll instance 43, use the commands:

```
awplus# configure terminal
awplus(config)# ping-poll 43
awplus(config-ping-poll)# no source-ip
```

Related Commands

description (ping-polling)

ip (ping-polling)

length (ping-poll data)

ping-poll

show ping-poll

timeout (ping polling)

Overview This command specifies the time in seconds that the polling instance waits for a response to a ping packet. You may find a higher time-out useful in networks where ping packets have a low priority.

The **no** variant of this command resets the set time out to the default of one second.

Syntax

```
timeout <1-30>
no timeout
```

Parameter	Description
<1-30>	Length of time, in seconds, that the polling instance waits for a response from the polled device.

Default The default is 1 second.

Mode Ping-Polling Configuration

Examples To specify the timeout as 5 seconds for ping-poll instance 43, use the commands:

```
awplus# configure terminal
awplus(config)# ping-poll 43
awplus(config-ping-poll)# timeout 5
```

To reset the timeout to its default of 1 second for ping-poll instance 43, use the commands:

```
awplus# configure terminal
awplus(config)# ping-poll 43
awplus(config-ping-poll)# no timeout
```

Related Commands

critical-interval

fail-count

normal-interval

ping-poll

sample-size

show ping-poll

up-count

up-count

Overview This command sets the number of consecutive pings that the polling instance must receive a reply to before classifying the device reachable again.

The **no** variant of this command resets the up count to the default of 30.

Syntax

```
up-count <1-100>
no up-count
```

Parameter	Description
<1-100>	Number of replied pings before an unreachable device is classified as reachable.

Default The default is 30.

Mode Ping-Polling Configuration

Examples To set the upcount to 5 consecutive pings for ping-polling instance 45, use the commands:

```
awplus# configure terminal
awplus(config)# ping-poll 45
awplus(config-ping-poll)# up-count 5
```

To reset the upcount to the default value of 30 consecutive pings for ping-polling instance 45, use the commands:

```
awplus# configure terminal
awplus(config)# ping-poll 45
awplus(config-ping-poll)# no up-count
```

Related Commands

critical-interval

fail-count

normal-interval

ping-poll

sample-size

show ping-poll

timeout (ping polling)

undebug ping-poll

Overview This command applies the functionality of the no debug ping-poll command.

Part 8: Firewall and Network Address Translation (NAT)

56 Firewall Commands

Introduction

Overview This chapter provides an alphabetical reference of commands used to configure AlliedWare Plus Firewall. For more information see the Firewall_and Network Address Translation (NAT) Feature Overview and Configuration_Guide.

The table below lists the firewall commands and their applicable modes.

Figure 56-1: Firewall commands and applicable modes

Mode	Command
Privileged Exec	clear firewall connections
	debug firewall
	show debugging firewall
	show firewall
	show firewall connections
	show firewall rule
	show firewall rule config-check
	show running-config firewall
Global Configuration	firewall
Firewall Configuration	protect (Firewall)
	rule (Firewall)
	move rule (Firewall)

Command List

- "clear firewall connections" on page 2596
- "connection-limit (Firewall)" on page 2597
- "connection-log events" on page 2598

- "firewall" on page 2599
- "debug firewall" on page 2600
- "ip tcp timeout established" on page 2601
- "move rule (Firewall)" on page 2602
- "protect (Firewall)" on page 2603
- "rule (Firewall)" on page 2604
- "show connection-log events" on page 2606
- "show firewall" on page 2607
- "show firewall connections" on page 2608
- "show firewall connections limits" on page 2609
- "show firewall connections limits config-check" on page 2610
- "show firewall rule" on page 2611
- "show firewall rule config-check" on page 2613
- "show debugging firewall" on page 2614
- "show running-config firewall" on page 2615

clear firewall connections

Overview Use this command to clear firewall connections.

Syntax

```
clear firewall connections
```

Mode Privileged Exec

Usage Removing the Network Address Translation (NAT) rule by using the **no nat rule** command for an actively translated flow does not stop translating immediately. This means subsequent packets in the flow are continued to be translated.

The continued translation after associated NAT rule is removed will only stop when:

- You use the **clear firewall connections** command to manually stop translations immediately, when the associated rule has been deleted regardless whether the firewall feature is actually configured with NAT or not.
- The traffic flow ends naturally, for example, when it is stopped from the source. If the flow is re-initiated from a host, it will not be translated by the firewall, as the rule is deleted after the first flow stopped.

Examples To clear firewall connections, use the command:

```
awplus# clear firewall connections
```

Validation commands show firewall connections

Related commands rule (NAT)

connection-limit (Firewall)

Overview Use this command to limit firewall connections for an entity.

Use the **no** variant of this command to remove the limit.

Syntax

```
connection-limit [<1-65535>] from <entity_name> with limit
<0-100000>
```

```
no connection-limit {<1-65535>|all}
```

Parameter	Description
<1-65535>	Unique numeric identifier for the limit.
<entity_name>	An entity represents a logical grouping of subnets, hosts or interfaces. For more information about entity, see the Application and Entity Commands.
<0-100000>	The maximum number of permitted connections for the entity.
`all`	Delete all limits.

Default The limiting is disabled by default and the number of connections will not be limited. However, the number is up to the maximum total number of allowed connections.

Mode Firewall Configuration

Usage This command allows you to limit the number of firewall sessions associated with a specific entity. The limit will be applied to each host on that entity. This means connection limits applied to an entity with multiple addresses will apply the limit to individual hosts, not the total connections for the entity. The limit applies to both IPv4 and IPv6.

If a connection limit rule is removed, any running connections are not stopped. Changes to limits only affect new connections. Adding a lower limit will not affect existing connections.

Examples To set a connection limit for entity `DMZ`, use the following command:

```
awplus(config-firewall)# connection-limit
1 from DMZ with limit 10000
```

To remove the connection limit, use the following command:

```
awplus(config-firewall)# no connection-limit
1
```

Validation commands show firewall connections

show firewall connections limits

connection-log events

Overview Use this command to enable extra logging for indicating the start and the end of connections passing through the firewall.

Use the **no** variant of this command to turn off the extra logging of connections passing through the firewall.

Syntax

```
connection-log events [new|end|all]
no connection-log events [new|end|all]
```

Parameter	Description
`new`	New connection
`end`	Connections closed
`all`	All new connections and connections closed. Default.

Default Connection logging is not enabled by default.

Mode Global Configuration.

Usage There are two types of messages you can log: new connections and connections that ended. You can control the amount of messages you log by choosing to log either type of message or all of the message types.

Messages contain the following information:

- time
- source and destination addresses (NATed and unNATed)
- protocol
- source and destination ports (NATed and unNATed)
- bytes and packets passed (found in the connection end message)

Example To log all of the new connections and all of the closed connections, use the commands:

```
awplus# configure terminal
awplus(config)# connection-log events all
```

Related Commands show connection-log events

Command changes Version 5.4.7-1.1: command added.

firewall

Overview Use this command to configure the firewall.

Use the **no** variant of this command to remove all firewall configuration.

Syntax

```
firewall
no firewall
```

Mode Global Configuration

Usage This command allows you to enter the Firewall Configuration mode. The command prompt for this mode is **awplus(config-firewall)#**

In the Firewall Configuration mode, you can:

- Enable or disable firewall protection, see the protect (Firewall) command.
- Create, move, or delete rules for the firewall, see the rule (Firewall) command and the move rule (Firewall) command.

Examples To configure the firewall, use the commands:

```
awplus# configure terminal
awplus(config)# firewall
awplus(config-firewall)#
```

To remove all firewall configuration, use the commands:

```
awplus# configure terminal
awplus(config)# no firewall
```

Validation commands

show firewall

show running-config firewall

debug firewall

Overview Use this command to enable firewall debugging and Network Address Translation (NAT) debugging. This will cause additional detailed debugging information to be logged at the “informational” and “debugging” levels.

Use the **no** variant of this command to disable firewall debugging and NAT debugging.

For more information about NAT, see the Firewall_and Network Address Translation (NAT) Feature Overview and Configuration_Guide.

Syntax

```
debug firewall
no debug firewall
```

Default Firewall debugging and NAT debugging are disabled by default.

Mode Privileged Exec

Examples To enable firewall debugging and NAT debugging, use the command:

```
awplus# debug firewall
```

To disable firewall debugging and NAT debugging, use the command:

```
awplus# no debug firewall
```

Validation commands show debugging firewall

ip tcp timeout established

Overview Use this command to set the idle timeout for all established TCP connections.

Use the **no** variant of this command to set the idle timeout back to the default of 3600 seconds.

Syntax

```
ip tcp timeout established <1-31536000>
no ip tcp timeout established
```

Parameter	Description
<1-31536000>	Idle timeout for established TCP connections in seconds from 1 to 3153600.

Default 3600 seconds (1 hour)

Mode Global Configuration

Usage By default, when a TCP session is successfully established through the firewall, when the session goes idle, it automatically times out of the firewall connection tracking table after 3600 seconds. In some situations it may be beneficial to time out unused established TCP sessions earlier.

For example, in a busy environment where there is an excessive number of sessions being established, the firewall connection tracking table could become oversubscribed, with new connections being blocked until older sessions are timed out.

Example To set a non-default TCP session timeout for established idle sessions of 1800 seconds (30 minutes), use the commands:

```
awplus# configure terminal
awplus(config)# ip tcp timeout established 1800
```

Example To set the TCP session timeout for established idle sessions back to the default setting of 3600 seconds, use the commands:

```
awplus# configure terminal
awplus(config)# no ip tcp timeout established
```

Related Commands show running-config

Command changes Version 5.4.6-1.1: command added

move rule (Firewall)

Overview Use this command to change the order of firewall rules.

Firewall rules are applied in rule ID order. When rules match the same application, source entity and destination entity, only the rule with the lowest ID is applied.

Note that you can move an existing rule ID only to an ID that is not assigned to any rule; otherwise you will be given an error message. Also note that a change to the rule order may change the rule results.

Syntax

```
move rule <1-65535> to <1-65535>
```

Parameter	Description
`move rule <1-65535>`	Move the ID of a given rule. The rule ID of the given rule must exist. Each rule has an ID which is either designated by the user or automatically generated when the rule is created. The rule ID is an integer from 1 to 65535.
`to <1-65535>`	New rule ID to assign. The new rule ID must not be used by any existing rule.

Mode Firewall Configuration

Examples To change the rule ID from `20` to `10`, use the commands:

```
awplus# configure terminal
awplus(config)# firewall
awplus(config-firewall)# move rule 20 to 10
```

Validation commands

show firewall rule

show running-config firewall

Related commands

rule (Firewall)

protect (Firewall)

Overview Use this command to enable firewall protection.

Use the **no** variant of this command to disable firewall protection without losing the existing firewall configuration.

Syntax

```
protect
no protect
```

Default Firewall protection is disabled by default.

Mode Firewall Configuration

Usage Firewall protection is disabled by default and all traffic can pass through the firewall. When the firewall is enabled and no rules are added, all traffic will be blocked by default. You can use the rule (Firewall) command to configure rules to allow traffic to pass through the firewall.

Examples To enable firewall protection, use the commands:

```
awplus# configure terminal
awplus(config)# firewall
awplus(config-firewall)# protect
```

To disable firewall protection, use the commands:

```
awplus# configure terminal
awplus(config)# firewall
awplus(config-firewall)# no protect
```

Validation commands

show firewall

show running-config firewall

rule (Firewall)

Overview Use this command to create a rule for the firewall. Firewall security policy is specified in the form of firewall rules. Each rule defines the appropriate processing of a type of traffic passing through the firewall.

Use the **no** variant of this command to remove a rule.

Syntax

```
rule [<1-65535>] {permit|deny|reject|log} <application-name>
from <source-entity> to <destination-entity>
[no-state-enforcement] [log]
```

```
no rule {<1-65535>|all}
```

Parameter	Description
<1-65535>	Rule ID is an integer in the range <1-65535>. If you don't designate a rule ID, a rule ID will be automatically generated and it will be greater than the current highest rule ID.
`permit`	Permit connections that match the application, source entity and destination entity specified with this command.
`deny`	Drop connections that match the application, source entity and destination entity specified with this command. No error message is sent back to the source host.
`reject`	Reject connections that match the application, source entity and destination entity specified with this command. An error message (for instance, a TCP reset for a rejected TCP connection, or a destination unreachable message for an ICMP connection, etc.) is sent back to the source host.
`log`	When 'log' is the action for the rule, log an event each time the rule is hit. The traffic will also be processed by subsequent firewall rules which may permit, deny or reject the connection.
<application-name>	Application name. You can either specify an application name or use the word `any`, which stands for all applications. For more information about applications, see Application and Entity Commands.
<source-entity>	Source entity name. An entity represents a logical grouping of subnets, hosts or interfaces. For more information about entities, see Application and Entity Commands.
<destination-entity>	Destination entity name.

Parameter	Description
`no-state-enforcement`	Optionally disable state enforcement for this rule. Use this option with caution as it will allow reverse path connection initiation. It should be used only when the traffic forward and reverse paths must be different and there is no alternative approach available. This option is disabled by default.
`log`	When 'log' is appended to a rule, the action is applied and a log message is also generated each time the rule is hit.
`all`	Delete all rules.

Mode Firewall Configuration

Usage When the firewall is enabled and no rules are added, all traffic is blocked by default, you can use this command to create rules for permitting packets between entities.

The rule is not valid and cannot be hit if either the application, source entity or destination entity the rule applies to is not properly configured, for example, the application does not exist or does not have a protocol configured or the entity does not exist. To configure applications and entities, see Application and Entity Commands. You can also use the show firewall rule config-check command to check rule configuration validity.

You can change the rule order by using the move rule (Firewall) command.

Examples To create a rule for permitting application ping between 'public' and 'private', use the command:

```
awplus(config-firewall)# rule 10 permit
ping from public to private
```

To create a rule for denying application http between 'public.wan' and 'private.lan', use the command:

```
awplus(config-firewall)# rule 20 deny
http from public.wan to private.lan
```

To create a firewall rule to permit application 'ping' between 'public' and 'dmz' entities and to log the results, use the commands:

```
awplus(config-firewall)# rule 30 permit
ping from public to dmz log
```

Related commands

move rule (Firewall)

show firewall rule

show firewall rule config-check

Command changes Version 5.4.7-0.1: **no-state-enforcement** option added.

show connection-log events

Overview This command displays the configuration state (enabled or disabled) for the logging of connections passing through the firewall, as configured by the connection-log events command.

Syntax
```
show connection-log events
```

Mode User Exec

Example To show the logging configuration state for the connections passing through the firewall, use the command:

```
awplus# show connection-log events
```

Output Figure 56-2: Example output from **show connection-log events**

```
awplus#show connection-log events
Log new connection events:    Disabled
Log connection end events:    Enabled
```

Related Commands connection-log events

Command changes Version 5.4.7-1.1: command added.

show firewall

Overview Use this command to show the protection state of the firewall and the number of active connections being handled by the firewall.

You can use the protect (Firewall) command to enable firewall protection.

Syntax

```
show firewall
```

Mode Privileged Exec

Examples To show the state of the firewall, use the command:

```
awplus# show firewall
```

Output Figure 56-3: Example output from the **show firewall** command

```
awplus#show firewall
Firewall protection is enabled
Active connections: 9
```

Related commands protect (Firewall)

show firewall connections

Overview Use this command to show the connections currently being tracked by the firewall.

Syntax

```
show firewall connections
```

Mode Privileged Exec

Examples To show the connections currently being tracked by the firewall, use the command:

```
awplus# show firewall connections
```

Output Figure 56-4: Example output from the **show firewall connections** command

```
awplus#show firewall connections
tcp ESTABLISHED src=192.168.1.2 dst=172.16.1.2 sport=58616
dport=23 packets=16
bytes=867 src=172.16.1.2 dst=172.16.1.1 sport=23 dport=58616
packets=11 bytes=636
[ASSURED]
icmpv6 src=2001:db8::2 dst=2001:db8::1 type=128 code=0 id=1416
packets=34
bytes=3536 src=2001:db8::1 dst=2001:db8::2 type=129 code=0 id=1416
packets=34
bytes=3536
tcp TIME_WAIT src=2001:db8:1::2 dst=2001:db8:2::2 sport=42532
dport=80 packets=7
bytes=597 src=2001:db8:2::2 dst=2001:db8:1::2 sport=80 dport=42532
packets=5
bytes=651 [ASSURED]
tcp TIME_WAIT src=2001:db8:1::2 dst=2001:db8:2::2 sport=48740
dport=80 packets=5
bytes=564 src=2001:db8:2::2 dst=2001:db8:1::2 sport=80 dport=48740
packets=5
bytes=594 [ASSURED]
```

Related commands clear firewall connections

show firewall connections limits

Overview Use this command to show the configured firewall connection-limits for a given entity.

Syntax

```
show firewall connections limits
```

Mode Privileged Exec

Examples To show the information about all the firewall connection limits, use the command:

```
awplus# show firewall connections limits
```

Output Figure 56-5: Example output from the **show firewall connections limits** command

```
awplus#show firewall connections limits
ID       Entity               Limit       Hit Count
-------------------------------------------------
10       DMZ                  100         42
```

Related commands show firewall connections limits config-check

show firewall connections limits config-check

Overview Use this command to check configuration validity of firewall connection limits.

An invalid rule will not be active and cannot be hit. This command also shows the reasons why a limit configuration is not valid.

Syntax
```
show firewall connections limits config-check
```

Mode Privileged Exec

Usage Firewall limits are applied to entities only. A limit is not valid if the source entity (zone) is not configured properly. This command checks if the entity exists at all, and if it does it also checks if the entity (zone) has a valid subnet.

Examples To check configuration validity of connection-limit rules, use the command:

```
awplus# show firewall connections limits
config-check
```

Output Figure 56-6: Example output from the **show firewall connections limits config-check** command on the console if rule configuration errors are detected. Connection-limit 10 uses an entity that exists; however no subnet has been specified. Connection-limit 20 uses an entity that doesn't exist.

```
awplus#show firewall connections limits config-check
Connection-limit 10:
  "From" entity has no subnet or host addresses
Connection-limit 20:
  "From" entity does not exist
```

Output Figure 56-7: Example output from the s**how firewall connections limits config-check** command if all limit rules are valid

```
awplus#show firewall connection limits config-check
All rules are valid
```

Related commands show firewall connections limits

show firewall rule

Overview Use this command to show information about firewall rules.

Syntax

```
show firewall rule [<1-65535>]
```

Parameter	Description
<1-65535>	Rule ID

Mode Privileged Exec

Examples To show information about all firewall rules, use the command:

```
awplus# show firewall rule
```

Output Figure 56-8: Example output from the **show firewall rule** command

```
awplus#show firewall rule

[* = Rule is not valid - see "show firewall rule config-check"]
  ID    Action  App       From              To
Hits
-------------------------------------------------------------------
----------------
  10    permit  ping      public            private
0
  20    permit  ping      public             dmz
0
  40    permit  ping      private            dmz
0
* 50    permit  voice     public            private
0
```

To show information about a specific firewall rule, use the command:

```
awplus# show firewall rule 10
```

Output Figure 56-9: Example output from the **show firewall rule** command

```
awplus#show firewall rule 10

[* = Rule is not valid - see "show firewall rule config-check"]
  ID    Action  App       From              To
Hits
-------------------------------------------------------------------
----------------
  10    permit  ping      public            private
0
```

Output Parameter	Description
*	Indicates the rule is not valid and cannot be hit, see the show firewall rule config-check command.
Action	The rule action set by the rule (Firewall) command.
App	Application name.
From	Source entity.
To	Destination entity.
Hits	The number of times the firewall rule has been hit.

Related commands rule (Firewall)

show firewall rule config-check

Overview Use this command to check configuration validity of firewall rules.

An invalid rule will not be active and cannot be hit. This command also shows the reasons why a rule is not valid.

Syntax

```
show firewall rule config-check
```

Mode Privileged Exec

Usage Firewall rules are applied to applications and entities. A rule is not valid if either the application, source entity or destination entity the rule applies to is not configured properly.

To configure applications and entities, see Application and Entity Commands.

Examples To check configuration validity of firewall rules, use the command:

```
awplus# show firewall rule config-check
```

Output Figure 56-10: Example output from the **show firewall rule config-check** command if rule configuration errors are detected

```
awplus#show firewall rule config-check
Rule 10:
  Application does not have a protocol configured
  "From" entity does not exist
  "To" entity has no subnet or host addresses
```

Output Figure 56-11: Example output from the s**how firewall rule config-check** command if all rules are valid

```
awplus#show firewall rule config-check
All rules are valid
```

Related commands rule (Firewall)

show firewall rule

show debugging firewall

Overview Use this command to show the firewall and Network Address Translation (NAT) debugging status.

You can use the debug firewall command to enable firewall and NAT debugging.

For more information about NAT, see the Firewall_and Network Address Translation (NAT) Feature Overview and Configuration_Guide.

Syntax

```
show debugging firewall
```

Mode Privileged Exec

Examples To show the firewall and NAT debugging status, use the command:

```
awplus# show debugging firewall
```

Output Figure 56-12: Example output from the **show debugging firewall** command

```
awplus#show debugging firewall
Firewall Debugging Status: on
```

Related commands debug firewall

show running-config firewall

Overview Use this command to show the configuration commands that have been used to configure the firewall.

Syntax

```
show running-config firewall
```

Mode Privileged Exec

Examples To show the configuration commands that have been used to configure the firewall, use the command:

```
awplus# show running-config firewall
```

Output Figure 56-13: Example output from the **show running-config firewall** command

```
awplus#show running-config firewall
firewall
 rule 10 permit ping from public to private
 protect
!
```

57 Application and Entity Commands

Introduction

This chapter provides an alphabetical reference of commands used to configure application and entity. For more information, see the Firewall_and Network Address Translation (NAT) Feature Overview and Configuration_Guide.

The table below lists the application commands and their applicable modes.

Figure 57-1: Application commands and applicable modes

Mode	Command
Privileged Exec	show application
	show application detail
Global Configuration	application
Application Mode	protocol
	icmp-type
	icmp-code
	sport
	dport

The table below lists the entity commands and their applicable modes.

Figure 57-2: Entity commands

Mode	Command
Privileged Exec	show entity
Global Configuration	zone
Zone Mode	network (Entity)

Mode	Command
Network Mode	`ip subnet`
	`ipv6 subnet`
	`host (Entity)`
Host Mode	`ip address (Entity)`
	`ipv6 address (Entity)`

Command List

- "application" on page 2618
- "dport" on page 2620
- "dscp" on page 2622
- "host (Entity)" on page 2624
- "icmp-code" on page 2626
- "icmp-type" on page 2628
- "ip address (Entity)" on page 2630
- "ip subnet" on page 2632
- "ipv6 address (Entity)" on page 2634
- "ipv6 subnet" on page 2636
- "network (Entity)" on page 2638
- "protocol" on page 2640
- "show application" on page 2642
- "show application detail" on page 2643
- "show entity" on page 2646
- "sport" on page 2648
- "zone" on page 2650

application

Overview Use this command to create or modify a custom application.

Application is a high level abstraction of application packets being transported by network traffic. Traffic matching for applications can be achieved through the firewall by using several techniques, for example, matching packets to port numbers or searching for application signatures in flows of packets.

Use the **no** variant of this command to delete a custom application.

Syntax

```
application <application-name>
no application <application-name>
```

Parameter	Description
<application-name>	Application name. You can use all alphanumeric ASCII characters, and the dash (-) and underscore (_) characters. The name can be 1 to 64 characters long. The application name is case-sensitive. If you create two application names with the same spelling but one in upper case and the other one in lower case, the last overwrites the first entry.

Mode Global Configuration

Usage This command allows you to enter the Application Mode with the prompt **awplus(config-application)#**. You can use this command to create a custom application or to configure an exiting application. You can configure source port, destination port, protocol, ICMP code and ICMP type for the application. Application is invalid if its protocol, source or destination are not properly configured, for example, application has no protocol configured, or, source and destination ports are applied to protocols that are not TCP, UDP or SCTP.

There are 40 predefined applications with protocols, source and destinations ports.

You can change the protocol, source and destination ports of the predefined applications. You can only delete the predefined application when you change either of its protocol, source or destination port.

Use the show application command to show all the custom and predefined applications.

Examples To create a custom application named `openVPN`, use the commands:

```
awplus# configure terminal
awplus(config)# application openVPN
awplus(config-application)#
```

To delete custom application `openVPN`, use the commands:

```
awplus# configure terminal
awplus(config)# no application openVPN
```

Validation commands

show application

Related commands

dport

icmp-code

icmp-type

protocol

sport

dport

Overview Use this command to specify a destination port or port range for an application.

A port number is part of the addressing information used to identify a specific process to which a network message is to be forwarded between a sender and a receiver. For the full list of port numbers and their assignment, you can visit the Internet Assigned Numbers Authority (IANA) Web site: www.iana.org.

Use the **no** variant of this command to delete a port or a port range from an application. Note that

NOTE:

The port or port range that you want to delete must match exactly the existing port or port range. You cannot remove a port range that is part of an existing port range.

Syntax

```
dport {<destination-port>|any|<start-range> to <end-range>}
no dport {<destination-port>|any|<start-range> to <end-range>}
```

Parameter	Description
<destination-port>	The destination port number, either TCP or UDP, specified as an integer in the range <1-65535>.
any	Any port number in the range <1-65535>. This equals to a range of 1 to 65535.
<start-range>	Starting port number in the range <1-65535>.
to *<end-range>*	Ending port number in the range <1-65535> or max.

Mode Application Mode

Usage You can create more than one destination port number or port range for an application.

Examples To specify destination port 13 for application openVPN, use the commands:

```
awplus# configure terminal
awplus(config)# application openVPN
awplus(config-application)# dport 13
```

To specify destination port 15 and port ranges for application openVPN, use the commands:

```
awplus# configure terminal
awplus(config)# application openVPN
awplus(config-application)# dport 15
awplus(config-application)# dport 30 to 37
awplus(config-application)# dport 50 to max
```

To specify destination port `any`, that is a port number range of <1-65535>, for application `openVPN`, use the commands:

```
awplus# configure terminal
awplus(config)# application openVPN
awplus(config-application)# dport any
```

To remove destination port `15` from application `openVPN`, use the commands:

```
awplus# configure terminal
awplus(config)# application openVPN
awplus(config-application)# no dport 15
```

To remove port `any` from application `openVPN`, use the commands:

```
awplus# configure terminal
awplus(config)# application openVPN
awplus(config-application)# no dport 1 to 65535
```

Validation commands show application

Related commands application

sport

dscp

Overview Use this command to specify one or more DSCP values used by an application.

Use the **no** variant of this command to remove one or more DSCP values from an application.

Syntax

```
dscp <dscp-list>
dscp {af11|af12|af13|af21|af22|af23|af31|af32|af33|af41|af42|af43|ef|be}
dscp {cs0|cs1|cs2|cs3|cs4|cs5|cs6|cs7}
no dscp
no dscp <dscp-list>
no dscp {af11|af12|af13|af21|af22|af23|af31|af32|af33|af41|af42|af43|ef|be}
no dscp {cs0|cs1|cs2|cs3|cs4|cs5|cs6|cs7}
```

Parameter	Description
<dscp-list>	One or more DSCP values, in the range 0-63. Use spaces to separate values.
af11 ... be	One or more DSCP values specified according to the Assured Forwarding group, as defined in RFC 2597 and RFC 3260. See the table below for values. “ef” means expedited forwarding (DSCP 46) and “be” means best effort (DSCP 0). Voice traffic is typically given a value of ef.
cs0 ... cs7	One or more DSCP values specified according to the Class Selector group. This is equivalent to TOS IP precedence values, so that CS0 is equivalent to an IP precedence value of 0, CS1 is equivalent to an IP precedence value of 1, and so on.

Table 57-1: Assured Forwarding (AF) behavior group

	Class 1	Class 2	Class 3	Class 4
Low drop probability	AF11 (DSCP 10)	AF21 (DSCP 18)	AF31 (DSCP 26)	AF41 (DSCP 34)
Medium drop probability	AF12 (DSCP 12)	AF22 (DSCP 20)	AF32 (DSCP 28)	AF42 (DSCP 36)
High drop probability	AF13 (DSCP 14)	AF23 (DSCP 22)	AF33 (DSCP 30)	AF43 (DSCP 38)

Mode Application Mode

Usage You can specify only one set of DSCP values for an application. The newly specified list will replace the existing one; it will not be added to the existing one.

Example To specify a DSCP of **ef** for the application named **voice**, use the commands:

```
awplus# configure terminal
awplus(config)# application voice
awplus(config-application)# dscp ef
```

To specify DSCPs of 12 and 13 for the application named **test**, use the commands:

```
awplus# configure terminal
awplus(config)# application test
awplus(config-application)# dscp 12 13
```

To remove DSCP12 from the application named **test**, use the commands:

```
awplus# configure terminal
awplus(config)# application test
awplus(config-application)# no dscp 12
```

To stop the application named **test** from using DSCP values, use the commands:

```
awplus# configure terminal
awplus(config)# application test
awplus(config-application)# no dscp
```

Related Commands

application

show application

show application detail

host (Entity)

Overview Use this command to add a host to a network entity or to configure an existing host.

Host is a high level abstraction of a single node in a network. This is commonly used if a particular device, for example a server, has a static IP address that needs to be specified in a firewall policy.

Use the **no** variant of this command to remove a host from a network entity.

Syntax

```
host <host-name>
no host <host-name>
```

Parameter	Description
<host-name>	Host name. You can use all alphanumeric ASCII characters, and the dash (-) and underscore (_) characters. The name can be 1 to 64 characters in long.

Mode Network Mode

Usage You can create multiple hosts for a network. A host entity is identified by its parent network using the dot notation, for example, ZoneName.NetworkName.HostName.

This commands allows you to enter the Host Mode with the prompt **awplus(config- host)#**. The Host Mode enables you to configure IPv4 address and IPv6 address for the host. For more information about host IPv4 address and IPv6 address, see ip address (Entity) command and ipv6 address (Entity) command respectively.

Example To create a host entity named `ftp` under network entity `servers`, use the commands:

```
awplus# configure terminal
awplus(config)# zone dmz
awplus(config-zone)# network servers
awplus(config-network)# host ftp
awplus(config-host)#
```

To remove host entity `ftp` and its IP address configuration from network entity `servers`, use the commands:

```
awplus# configure terminal
awplus(config)# zone dmz
awplus(config-zone)# network servers
awplus(config-network)# no host ftp
```

Validation commands

show entity

Related commands

ip address (Entity)

ipv6 address (Entity)

network (Entity)

icmp-code

Overview Use this command to configure an ICMP message code for an application.

ICMP has many messages that are identified by a "type" field and many of these ICMP types have a "code" field. Use the icmp-type command to specify the ICMP type. For the full list of the ICMP code assignments, you can visit the Internet Assigned Numbers Authority (IANA) Web site: www.iana.org.

Use the **no** variant of this command to restore the ICMP message code to its default, which is any.

Syntax

```
icmp-code {<code-number>|any}
no icmp-code
```

Parameter	Description
<code-number>	Specify an ICMP message code number in the range of 0 to 255.
`any`	Any ICMP message code in the range of 0 to 255.

Default The default ICMP code number is any.

Mode Application Mode

Usage You should configure the ICMP code only for applications that use protocol ICMP. To configure the application protocol, see the protocol command.

You can specify only one ICMP message code for an application. The newly specified code will replace the previous one.

Examples To specify ICMP code `5` (redirect) for application `openVPN`, use the commands:

```
awplus# configure terminal
awplus(config)# application openVPN
awplus(config-application)# icmp-code 5
```

To specify ICMP code as any code for application `openVPN`, use the commands: To restore the ICMP message code to its default for application openVPN, use the commands:

```
awplus# configure terminal
awplus(config)# application openVPN
awplus(config-application)# icmp-code any
awplus# configure terminal
awplus(config)# application openVPN
awplus(config-application)# no icmp-code
```

Validation commands show application

Related commands

application

icmp-type

protocol

icmp-type

Overview Use this command to configure an ICMP message type for an application.

The ICMP protocol has many messages that are identified by a "type" field. For the full list of the ICMP type assignments, you can visit the Internet Assigned Numbers Authority (IANA) Web site: www.iana.org.

Use the **no** variant of this command to restore the ICMP message type its default, which is deny.

Syntax

```
icmp-type {<type-number>|any}
no icmp-type
```

Parameter	Description
<*type-number*>	Specify an ICMP message type number in the range of 0 to 255.
any	Any ICMP message type in the range of 0 to 255.

Default The default ICMP type is any.

Mode Application Mode

Usage You should configure the ICMP type only for applications that use protocol ICMP. To configure the application protocol, see the protocol command.

You can specify only one ICMP message type for an application. The newly specified type will replace the previous one.

Examples To specify ICMP message type 8 (echo) for application openVPN, use the commands:

```
awplus# configure terminal
awplus(config)# application openVPN
awplus(config-application)# icmp-type 8
```

To specify ICMP message type as any type for application openVPN, use the commands:

```
awplus# configure terminal
awplus(config)# application openVPN
awplus(config-application)# icmp-type any
```

To restore the ICMP message type to its default for application openVPN, use the commands:

```
awplus# configure terminal
awplus(config)# application openVPN
awplus(config-application)# no icmp-type
```

Validation commands

show application

Related commands

application

icmp-code

network (Entity)

ip address (Entity)

Overview Use this command to assign an IPv4 address to a host entity.

Use the **no** variant of this command to remove an IPv4 address from the host.

Syntax

```
ip address <ipv4-address>
ip address dynamic interface <interface_name>
no ip address <ipv4-address>
no ip address dynamic interface <interface_name>
```

Parameter	Description
<ipv4-address>	The IPv4 address uses the format A.B.C.D.
dynamic	Dynamic IP address, for example, obtained from a DHCP server.
<interface_name>	Interface to acquire IP addresses from.

Mode Host Mode

Usage You can add multiple IP addresses to a host entity. If the IP address is not in the scope of any of its parent network's IPv4 subnets, a warning message will be given. Such an IP address is still acceptable because in the future the user may assign a network subnet that contains the host's IP address. Firewall policy rules will not apply to an IP address that is not in at least one of the network's subnets.

Examples To add an IP address to host `ftp`, use the commands:

```
awplus# configure terminal
awplus(config)# zone dmz
awplus(config-zone)# network servers
awplus(config-network)# ip subnet 192.168.1.0/24
awplus(config-network)# host ftp
awplus(config-host)# ip address 192.168.1.5
```

To add multiple IP addresses to host `ftp`, use the commands:

```
awplus# configure terminal
awplus(config)# zone dmz
awplus(config-zone)# network servers
awplus(config-network)# ip subnet 192.168.1.0/24
awplus(config-network)# host ftp
awplus(config-host)# ip address 192.168.1.8
awplus(config-host)# ip address 192.168.1.9
awplus(config-host)# ip address 192.168.1.10
```

To remove an IP address from host `ftp`, use the commands:

```
awplus# configure terminal
awplus(config)# zone dmz
awplus(config-zone)# network servers
awplus(config-network)# host ftp
awplus(config-host)# no ip address 192.168.1.5
```

Validation commands show entity

Related commands host (Entity)

ip subnet

Overview Use this command to add an IPv4 subnet to a network entity.

Use the **no** variant of this command to remove a subnet from a network entity.

Syntax

```
ip subnet <ip-network/m> [interface <interface-name>]
no ip subnet <ip-network/m> [interface <interface-name>]
```

Parameter	Description
<ip-network/m>	IP address of the network, entered in the form A.B.C.D/M. Dotted decimal notation followed by a forward slash, and then the subnet mask length.
`interface`	Specify an interface name. An interface may be specified to add a further restriction on the subnet. No interface configured indicates that any matching address from any interface is a member of this network.
<interface-name>	Interface name. Any AlliedWare Plus interface type (eth, vlan, ppp, tunnel, lo and so on). A warning message is given if the interface does not match an existing interface on the device.

Mode Network Mode

Usage You can create multiple subnets to a network entity.

Examples To add a subnet to network `servers`, use the commands:

```
awplus# configure terminal
awplus(config)# zone dmz
awplus(config-zone)# network servers
awplus(config-network)# ip subnet 192.168.2.0/24
```

To add a subnet and an interface to network `servers`, use the commands:

```
awplus# configure terminal
awplus(config)# zone dmz
awplus(config-zone)# network servers
awplus(config-network)# ip subnet 192.168.2.0/24 interface eth1
```

To add multiple subnets to network `servers`, use the commands:

```
awplus# configure terminal
awplus(config)# zone dmz
awplus(config-zone)# network servers
awplus(config-network)# ip subnet 192.168.2.0/24 interface eth1
awplus(config-network)# ip subnet 10.1.0.0/16 interface eth1
```

To remove a subnet from network `servers`, use the commands:

```
awplus# configure terminal
awplus(config)# zone dmz
awplus(config-zone)# network servers
awplus(config-network)# no ip subnet 192.168.2.0/24
```

Validation commands show entity

Related commands network (Entity)

ipv6 address (Entity)

Overview Use this command to assign an IPv6 address to a host entity.

Use the **no** variant of this command to remove an IPv6 address from an host entity.

Syntax

```
ipv6 address <ipv6-address>
ipv6 address dynamic interface <interface_name>
no ipv6 address <ipv6-address>
no ipv6 address dynamic interface <interface_name>
```

Parameter	Description
<ipv6-address>	The IPv6 address in the format x:x::x:x.
dynamic	Dynamic IPv6 address, for example, obtained from a DHCP server.
<interface_name>	Interface to acquire IP addresses from.

Mode Host Mode

Usage You can add multiple IPv6 addresses to a host entity. If the IPv6 address is not in the scope of any of its parent network's IPv6 subnets, a warning message will be given. Such an IP address is still acceptable because in the future the user may assign a network subnet that contains the host's IPv6 address. Firewall policy rules will not apply to an IPv6 address that is not in at least one of the network's subnets.

Examples To add an IPv6 address to host `web-server`, use the commands:

```
awplus# configure terminal
awplus(config)# zone dmz
awplus(config-zone)# network servers
awplus(config-network)# ipv6 subnet 2001:db8:24:100::/64
awplus(config-network)# host web-server
awplus(config-host)# ipv6 address 2001:db8:24:100::1
```

To add multiple IP addresses to host `web-server`, use the commands:

```
awplus# configure terminal
awplus(config)# zone dmz
awplus(config-zone)# network servers
awplus(config-network)# ipv6 subnet 2001:db8:24:100::/64
awplus(config-network)# host web-server
awplus(config-host)# ipv6 address 2001:db8:24:100::2
awplus(config-host)# ipv6 address 2001:db8:24:100::3
awplus(config-host)# ipv6 address 2001:db8:24:100::4
```

To remove an IPv6 address from host `web-server`, use the commands:

```
awplus# configure terminal
awplus(config)# zone dmz
awplus(config-zone)# network servers
awplus(config-network)# host web-server
awplus(config-host)# no ipv6 address 2001:db8:24:100::2
```

Validation commands show entity

Related commands host (Entity)

ipv6 subnet

Overview Use this command to assign an IPv6 subnet to a network entity.

Use the **no** variant of this command to remove a IPv6 subnet from a network entity.

Syntax

```
ipv6 subnet <ip-network/m> [interface <interface-name>]
no ipv6 subnet <ip-network/m> [interface <interface-name>]
```

Parameter	Description
<ip-network/m>	IPv6 address of the network, entered in the form X:X::X:X/M, followed by the prefix length in slash notation.
`interface`	Specify an interface name. An interface may be specified to add a further restriction on the subnet. No interface configured indicates that any matching address from any interface is a member of this network.
<interface-name>	Interface name. Any AlliedWare Plus interface type (eth, vlan, ppp, tunnel, lo and so on.) followed by any character. A warning message is given if the interface does not match an existing interface on the device.

Mode Network Mode

Usage You can create multiple subnets for a network entity.

Examples To add a subnet to network `servers`, use the commands:

```
awplus# configure terminal
awplus(config)# zone dmz
awplus(config-zone)# network servers
awplus(config-network)# ipv6 subnet 2001:db8::/32
```

To add a subnet and an interface to network `servers`, use the commands:

```
awplus# configure terminal
awplus(config)# zone dmz
awplus(config-zone)# network servers
awplus(config-network)# ipv6 subnet 2001:db8::/32 interface
eth1
```

To add multiple subnets to network `servers`, use the commands:

```
awplus# configure terminal
awplus(config)# zone dmz
awplus(config-zone)# network servers
awplus(config-network)# ipv6 subnet 2001:db8::7/32 interface
eth1
awplus(config-network)# ipv6 subnet 2001:db8::8/32 interface
eth1
```

To remove a subnet from network `servers`, use the commands:

```
awplus# configure terminal
awplus(config)# zone dmz
awplus(config-zone)# network servers
awplus(config-network)# no ipv6 subnet 2001:db8::/32
```

Validation commands show entity

Related commands network (Entity)

network (Entity)

Overview Use this command to add a network to a zone entity or configure an existing network.

A network is a high level abstraction of a logical network in a zone. This consists of the IP subnets and interfaces over which it is reachable. Subnets are grouped into networks to apply a common set of rules among the subnets.

Use the **no** variant of this command to destroy a network entity.

Syntax

```
network <network-name>
no network <network-name>
```

Parameter	Description
<network-name>	Network name. You can use all alphanumeric ASCII characters, and the dash (-) and underscore (_) characters. The name can be 1 to 64 characters in long.

Mode Zone Mode

Usage A network is a member of a zone. You can create multiple networks in a zone. A network entity is identified with its parent zone using the dot notation, for example, ZoneName.NetworkName.

This commands allows you to enter the Network Mode with the prompt **awplus(config- network)#**. In the Network Mode, you can:

- Configure subnets and interfaces for the network entity
- Create and delete host entities in the network

A network must have at least one valid network address for it to result in functioning rules using that network entity. For more information about how to add network address, see the ip subnet command and the ipv6 subnet command.

Note that if the network entity is destroyed, the subnets and hosts in the network entity will be destroyed as well.

Example To create a network entity named `servers`, use the commands:

```
awplus# configure terminal
awplus(config)# zone dmz
awplus(config-zone)# network servers
awplus(config-network)#
```

To destroy a network entity named `servers`, use the commands:

```
awplus# configure terminal
awplus(config)# zone dmz
awplus(config-zone)# no network servers
```

Validation commands

show entity

Related commands

host (Entity)

ip subnet

ipv6 subnet

zone

protocol

Overview Use this command to specify a protocol used by an application.

Protocol numbers are used to configure firewalls, routers, and proxy servers. The protocol number is in the protocol field of the IPv4 header and the next header field of IPv6 header. For the full list of the IP Protocol assignments, you can visit the Internet Assigned Numbers Authority (IANA) Web site: www.iana.org.

Use the **no** variant of this command to unset the protocol in an application.

Syntax

```
protocol {tcp|udp|icmp|ipv6-icmp|<protocol-number>}
no protocol
```

Parameter	Description
`tcp`	Transmission Control Protocol. The protocol number is 6.
`udp`	User Datagram Protocol. The protocol number is 17.
`icmp`	Internet Control Message Protocol for Internet Protocol version 4. The protocol number is 1.
`ipv6-icmp`	Internet Control Message Protocol for Internet Protocol version 6. The protocol number is 58.
<protocol-number>	Protocol number in the range of 0 to 255.

Mode Application Mode

Usage You can specify only one protocol for an application. The newly specified protocol will replace the previous one.

Examples To specify protocol `tcp` for application `openVPN`, use the commands:

```
awplus# configure terminal
awplus(config)# application openVPN
awplus(config-application)# protocol tcp
```

To specify protocol `udp` for application `openVPN`, use the commands:

```
awplus# configure terminal
awplus(config)# application openVPN
awplus(config-application)# protocol udp
```

To specify protocol `icmp` for application `openVPN`, use the commands:

```
awplus# configure terminal
awplus(config)# application openVPN
awplus(config-application)# protocol icmp
```

To specify protocol `41` (IPv6) for application `openVPN`, use the commands:

```
awplus# configure terminal
awplus(config)# application openVPN
awplus(config-application)# protocol 41
```

To unset the protocol in application `openVPN`, use the commands:

```
awplus# configure terminal
awplus(config)# application openVPN
awplus(config-application)# no protocol
```

Validation commands show application

Related commands application

show application

Overview Use this command to show the custom and predefined applications currently configured.

You can use the show application detail command to show detailed information of the applications.

Syntax

```
show application
```

Mode Privileged Exec

Examples To show all applications currently configured, use the command:

```
awplus# show application
```

Output Figure 57-3: Example output from **show application**

```
awplus#show application
aim       cvs       dns       ftp       http      https     icq
ident
imap      imaps     irc       jabber    l2tp      ldap      lisa
msn
mysql     news      nfs-tcp   nfs-udp   ntp       openvpn
pcanywhere-tcp

pcanywhere

-
udp
ping      pop3      pop3s     pptp      rdp       rsync
samba-tcp
samba-udp
smtp      socks     ssh       syslog    telnet    traceroute
                                                      vnc
whois
```

Related commands show application detail

show application detail

Overview Use this command to show detailed information about custom and predefined applications currently configured. The protocol, destination port, source port, ICMP code, ICMP type, DSCP and the name of the applications will be displayed.

Syntax

```
show application detail [<name>|custom]
```

Parameter	Description
<name>	The name of a specific application.
`custom`	User-defined application.

Mode Privileged Exec

Examples To show the information about all applications, use the command:

```
awplus# show application detail
```

Output Figure 57-4: Example output from **show application detail**

```
awplus#show application detail
Name              Protocol    Detail
------------------------------------------------------------------
aim               TCP         sport=1024-65535 dport=9898
cvs               TCP         sport=1024-65535 dport=2401
dns               UDP         sport=1024-65535 dport=53
ftp               TCP         sport=1024-65535 dport=21
http              TCP         sport=1024-65535 dport=80
https             TCP         sport=1024-65535 dport=443
icq               TCP         sport=1024-65535 dport=5190
ident             TCP         sport=1024-65535 dport=113
imap              TCP         sport=1024-65535 dport=143
imaps             TCP         sport=1024-65535 dport=993
irc               TCP         sport=1024-65535 dport=6667
jabber            TCP         sport=1024-65535 dport=5222-5223
l2tp              UDP         sport=1701 dport=1701
ldap              TCP         sport=1024-65535 dport=389
lisa              TCP         sport=1024-65535 dport=7741
msn               TCP         sport=1024-65535 dport=1863
mysql             TCP         sport=1024-65535 dport=3306
news              TCP         sport=1024-65535 dport=119
nfs-tcp           TCP         sport=1024-65535 dport=2049
nfs-udp           UDP         sport=1024-65535 dport=2049
ntp               UDP         sport=123,1024-65535 dport=123
openvpn           UDP         sport=1024-65535 dport=1194
pcanywhere-tcp    TCP         sport=1024-65535 dport=5631
pcanywhere-udp    UDP         sport=1024-65535 dport=5631-5632
ping              ICMP        type=8 code=0
pop3              TCP         sport=1024-65535 dport=110
pop3s             TCP         sport=1024-65535 dport=995
pptp              TCP         sport=1024-65535 dport=1723
rdp               TCP         sport=1024-65535 dport=3389
rsync             TCP         sport=1024-65535 dport=873
samba-tcp         TCP         sport=1024-65535 dport=139,445
samba-udp         UDP         sport=137-138,1024-65535
dport=137-138
smtp              TCP         sport=1024-65535 dport=25
socks             TCP         sport=1024-65535 dport=1080
ssh               TCP         sport=1024-65535 dport=22
syslog            UDP         sport=1024-65535 dport=514
telnet            TCP         sport=1024-65535 dport=23
traceroute        UDP         sport=1024-65535 dport=33434-33523
vnc               TCP         sport=1024-65535 dport=5900
whois             TCP         sport=1024-65535 dport=43
```

To show the information about the application `ping`, use the command:

```
awplus# show application detail ping
```

Output Figure 57-5: Example output from **show application detail** for a particular application

```
awplus#show application detail ping
Name              Protocol    Detail
------------------------------------------------------------------
ping              ICMP        type=8 code=0
```

Related Commands show application

show entity

Overview Use this command to show entity information.

Entity is a high level abstraction of a network device, a group of networks or subnets. It is the instance that firewall policy can be applied to. There are three types of entity:

- zone
- network
- host

Syntax `show entity [<entity>]`

Parameter	Description
<entity>	Specific entity in dot notation.

Mode Privileged Exec

Examples To show the information about all entities, use the command:

```
awplus# show entity
```

Output Figure 57-6: Example output from the **show entity** command

```
awplus#show entity
Zone:         zone1
 Network:     zone1.network1
  Subnet:     1:db8:24:100::/64
  Subnet:     2001:db8:24:100::/64
  Host:       zone1.network1.host1
   Address:   2001:db8:24:100::1

Zone:         zone2
 Network:     zone2.network2
  Host:       zone2.network2.host1
```

To show information associated with the network entity `zone1.network1`, use the command:

```
awplus# show entity zone1.network1
```

Output Figure 57-7: Example output from the **show entity** command

```
awplus#show entity zone1.network1
Network:     zone1.network1
 Subnet:     1:db8:24:100::/64
 Subnet:     2001:db8:24:100::/64
 Host:       zone1.network1.host1
  Address:   2001:db8:24:100::1
```

To show information associated with the host entity `zone1.network1.host1`, use the command:

```
awplus# show entity zone1.network1.host1
```

Output Figure 57-8: Example output from the **show entity** command

```
awplus#show entity zone1.network1.host1
Host:         zone1.network1.host1
 Address:     192.168.1.5
```

sport

Overview Use this command to specify a source port or a port range used for an application.

A port number is part of the addressing information used to identify a specific process to which a network message is to be forwarded between a sender and a receiver. For the full list of port numbers and their assignment, you can visit the Internet Assigned Numbers Authority (IANA) Web site: www.iana.org.

Use the **no** variant of this command to delete ports or port ranges from an application.

NOTE:

The port or port range that you want to delete must match exactly the existing port or port range. You cannot remove a port range that is part of an existing port range.

Syntax

```
sport {<source-port>|any|<start-range> to <end-range>}
no sport {<source-port>|any|<start-range> to <end-range>}
```

Parameter	Description
<source-port>	The source port number, either TCP or UDP, specified as an integer between 1 and 65535.
any	Any port number in the range <1-65535>. This equals to a range of 1 to 65535.
<start-range>	Starting port number in the range <1-65535>.
to *<end-range>*	Ending port number in the range <1-65535> or max.

Mode Application Mode

Usage You can create more than one source port number or port range for an application.

Examples To specify source port 13 for application openVPN, use the commands:

```
awplus# configure terminal
awplus(config)# application openVPN
awplus(config-application)# sport 13
```

To specify source port 15 and port ranges for application openVPN, use the commands:

```
awplus# configure terminal
awplus(config)# application openVPN
awplus(config-application)# sport 15
awplus(config-application)# sport 30 to 37
awplus(config-application)# sport 50 to 80
```

To specify source port `any`, that is a port number range of <1-65535>, for application `openVPN`, use the commands:

```
awplus# configure terminal
awplus(config)# application openVPN
awplus(config-application)# sport any
```

To remove source port `15` from application `openVPN`, use the commands:

```
awplus# configure terminal
awplus(config)# application openVPN
awplus(config-application)# no sport 15
```

To remove port `any` from application `openVPN`, use the commands:

```
awplus# configure terminal
awplus(config)# application openVPN
awplus(config-application)# no sport 1 to 65535
```

Validation commands show application

Related commands application

dport

zone

Overview Use this command to create a zone entity or configure an existing zone.

Zone is a high level abstraction for a logical grouping or segmentation of physical networks. This is the highest level of partitioning that firewall policy can be applied to. Zone establishes the security border of your networks. A zone defines a boundary where traffic is subjected to policy restrictions as it crosses to another region of your networks. The minimum zones normally implemented would be a trusted zone for the private network behind the firewall and a untrusted zone for the Internet. Other common zones are a Demilitarized Zone (DMZ) for publicly visible web servers and a Virtual Private Network (VPN) zone for remote access users or tunnels to other networks.

Use the **no** variant of this command to destroy a zone entity.

Syntax

```
zone <zone-name>
no zone <zone-name>
```

Parameter	Description
<zone-name>	Zone name. You can use all alphanumeric ASCII characters, and the dash (-) and underscore (_) characters. The name can be 1 to 64 characters long.

Mode Global Configuration

Usage This command allows you to enter the Zone Mode with the prompt **awplus(config- category)#**. The Zone Mode enables you to create, configure and delete network entities. For more information about network entity, see the network (Entity) command.

A zone entity must have at least one network entity for it to result in functioning rules using that zone entity. Fore more information about how to add network entities, see the network (Entity) command.

Note that if the zone entity is destroyed, the networks and hosts of this zone will be destroyed as well.

Examples To create a zone named `private`, use the commands:

```
awplus# configure terminal
awplus(config)# zone private
awplus(config-zone)#
```

To destroy zone `private` and all its networks, subnets and hosts, use the commands:

```
awplus# configure terminal
awplus(config)# no zone private
```

Validation commands show entity

58 NAT Commands

Introduction

This chapter provides an alphabetical reference of commands used to configure Network Address Translation (NAT). For more information about NAT introduction and configuration example, see the Firewall_and Network Address Translation (NAT) Feature Overview and Configuration_Guide.

The following figure lists the NAT commands and their applicable modes.

Figure 58-1: NAT commands and applicable modes

Mode	Command
Privileged Exec	show nat
	show nat rule
	show nat rule config-check
	show running-config nat
Global Configuration	nat
NAT Configuration	enable (NAT)
	move rule (NAT)
	rule (NAT)

Command List

- "enable (NAT)" on page 2654
- "ip limited-local-proxy-arp" on page 2655
- "local-proxy-arp" on page 2657
- "move rule (NAT)" on page 2658
- "nat" on page 2659
- "rule (NAT)" on page 2660

- "show nat" on page 2664
- "show nat rule" on page 2665
- "show nat rule config-check" on page 2667
- "show running-config nat" on page 2668

enable (NAT)

Overview Use this command to enable NAT .

Use the **no** variant of this command to disable NAT without losing existing NAT configuration.

Syntax

```
enable
no enable
```

Default NAT is disabled by default.

Mode NAT Configuration

Examples To enable NAT, use the commands:

```
awplus# configure terminal
awplus(config)# nat
awplus(config-nat)# enable
```

To disable NAT, use the commands:

```
awplus# configure terminal
awplus(config)# nat
awplus(config-nat)# no enable
```

Validation commands show nat

show running-config nat

ip limited-local-proxy-arp

Overview Use this command to enable local proxy ARP, but only for a specified set of IP addresses. This makes the device respond to ARP requests for those IP addresses when the addresses are reachable via the interface you are configuring.

To specify the IP addresses, use the command local-proxy-arp.

Use the **no** variant of this command to disable limited local proxy ARP. This stops your device from intercepting and responding to ARP requests for the specified hosts. This allows the hosts to use MAC address resolution to communicate directly with one another.

Syntax

```
ip limited-local-proxy-arp
no ip limited-local-proxy-arp
```

Default Limited local proxy ARP is disabled by default.

Mode Interface Configuration

Usage Limited local proxy ARP supports Static NAT configurations in which the NAT configuration's public address is different to the ethernet interface's address.

On such ethernet interfaces, the device needs to respond to ARP requests for the public address so that it will receive packets targeted at that address.

Limited local proxy ARP makes this possible. It is especially useful when you have a number of 1-1 NAT configurations and each public address falls within the public interface's subnet. If you enable limited local proxy ARP on the public interface and specify suitable addresses, the device will respond to ARP requests for those addresses, as long as the addresses are routed out the interface the ARP requests are received on. The device responds with its own MAC address.

Example The following configuration snippet shows how to use limited local proxy ARP, if you are using NAT for an HTTP server with an address of 172.22.0.3 connected via eth1, and eth1 has an address of 172.22.0.1:

```
! Create a private zone for the HTTP server with address 172.22.200.3:
zone private
network vlan1
ip subnet 172.22.200.0/24
host http_server
ip address 172.22.200.3
!
! Create a public zone for the HTTP server with address 172.22.0.3:
zone public
network eth1
ip subnet 0.0.0.0/0 interface eth1
host http_server
ip address 172.22.0.3
!
! Create a NAT rule to map from the public to the private zone:
nat
rule 10 portfwd http from public.eth1 to public.eth1.http_server with dst
private.vlan1.http_server
enable
!
! Configure eth1. It has a different public address than the HTTP server:
interface eth1
ip limited local-proxy-arp
ip address 172.22.0.1/24
!
! Configure vlan1:
interface vlan1
ip address 172.22.200.5/24
!
! Tell the device to respond to ARPs for the HTTP server public address:
local-proxy-arp 172.22.0.3/32
```

Related Commands

ip local-proxy-arp

local-proxy-arp

local-proxy-arp

Overview Use this command to specify an IP subnet for use with limited local proxy ARP. When limited local proxy ARP is enabled with the command ip limited-local-proxy-arp, the device will respond to ARP requests for addresses in that subnet.

Use the **no** variant of this command to stop specifying a subnet for use with limited local proxy ARP.

Syntax

```
local-proxy-arp [<ip-add/mask>]
no local-proxy-arp [<ip-add/mask>]
```

Parameter	Description
<ip-add/mask>	The IP subnet to use with limited local proxy ARP, in dotted decimal format (A.B.C.D/M). To specify a single IP address, use a 32-bit mask.

Default No subnets are specified for use with limited local proxy ARP.

Mode Global Configuration

Example To specify limited local proxy ARP for the address 172.22.0.3, use the following commands:

```
awplus# configure terminal
awplus(config)# local-proxy-arp 172.22.0.3/32
```

This is part of a configuration snippet that shows how to use limited local proxy ARP with static NAT. See the command ip limited-local-proxy-arp for the whole example.

Related Commands ip limited-local-proxy-arp

move rule (NAT)

Overview Use this command to change the order of a NAT rule.

You can move an existing rule ID only to an ID that is not assigned to any rule, otherwise you will receive an error message.

Syntax

```
move rule <1-65535> to <1-65535>
```

Parameter	Description
`move rule <1-65535>`	Move the order of a given rule. The rule ID of the given rule must exist. Each rule has an ID which is either designated by the user or automatically generated when the rule is created. The rule ID is an integer from 1 to 65535.
`to <1-65535>`	New rule ID to assign. The new rule ID must not be used by any existing rule.

Mode NAT Configuration

Examples To change the ID of a rule from `10` to `30`, use the commands:

```
awplus# configure terminal
awplus(config)# nat
awplus(config-nat)# move rule 10 to 30
```

Validation commands show nat rule

show running-config nat

Related commands rule (NAT)

nat

Overview Use this command to configure NAT.

Use the **no** variant of this command to remove all NAT configuration.

Syntax

```
nat
no nat
```

Mode Global Configuration

Usage This command allows you to enter the NAT Configuration mode. The command prompt for this mode is **awplus(config-nat)#**.

In the NAT Configuration mode, you can:

- Enable NAT, see the enable (NAT) command.
- Create NAT rules or change the order of NAT rules, see the rule (NAT) command and the move rule (NAT) command.

Examples To configure NAT, use the commands:

```
awplus# configure terminal
awplus(config)# nat
awplus(config-nat)#
```

To remove all NAT configuration, use the commands:

```
awplus# configure terminal
awplus(config)# no nat
```

Validation commands show nat

rule (NAT)

Overview Use this command to create a NAT rule.

Use the **no** variant of this command to remove a specified rule or all rules.

Syntax

```
rule [<1-65535>] masq <application-name> from <source-entity>
to <destination-entity> [with src <source-host-entity>]
```

```
rule [<1-65535>] portfw <application-name> from <source-entity>
[to <destination-entity>] with dst <destination-host-entity>
[dport <1-65535>]
```

```
rule [<1-65535>] netmap <application-name> from
<source-subnet-entity> to <destination-subnet-entity> with
{src|dst} <translated-subnet-entity>
```

```
no rule {<1-65535>|all}
```

Parameter	Description
<1-65535>	Rule ID is an integer in the range 1 to 65535. If you do not designate a rule ID, a rule ID will be automatically generated and it will be greater than the current highest rule ID.
`masq`	The type of NAT rule. NAT with IP Masquerade is a case where all or a range of addresses are mapped to a single address with source port translation to identify the association. This single address masquerades as the public source address for the private addresses.
`portfw`	The type of NAT rule. Port forwarding allows remote hosts to connect to a specific host or service within a private LAN. This will forward IPv4 packets on to another device, for example, forward HTTP traffic to an internal web server.
`netmap`	The type of NAT rule. Use subnet-based NAT to translate the subnet portion of IP addresses while leaving the host portion unchanged.
<application-name>	In all NAT rules, the application name, either one of the predefined applications or an application defined by using the **application** command.

Parameter	Description
<source-entity>	Source entity name. An entity represents a logical grouping of subnets, hosts or interfaces, created by the **zone**, **network (Entity)**, or **host (Entity)** commands. In a **masq** rule, the source entity defines the private side of the router. You assign private IP addresses (RFC 1918) to hosts on the private side of the router. When those hosts send traffic, the router translates the private addresses to one or more publicly valid addresses before routing the traffic. When the router receives traffic that is destined for those hosts, it translates the public addresses back to the appropriate private addresses. In a **portfw** rule, the source entity may be an entity outside your private network.
<destination-entity>	The destination entity name. The destination entity defines the pool of public-valid IP addresses. It can be a zone (created by the **zone** command), network (**network (Entity)** command) or host (**host (Entity)** command).
<source-host-entity>	In a **masq** rule, the specific source host address that the traffic will masquerade as.The source -host-entity must be a host with one IP address, created by using the **host (Entity)** command.
<destination-host-entity>	In a **portfw** rule, the target entity name of the specific destination host that the traffic will be port-forwarded to. The target entity must be a host with one IP address, created by using the **host (Entity)** command.
`dport <1-65535>`	In a **portfw** rule, modify the destination port to the specified port. (Only for protocols that have ports.)
<source-subnet-entity>	The source entity that the netmap rule will apply to, for instance a network created by the **network (Entity)** command. When the **with src** parameter is used, this source-subnet-entity is translated to the <translated-subnet-entity> specified.
<destination-subnet-entity>	The destination entity that the **netmap** rule applies to, for instance a network created by the **network (Entity)** command. When the **with dst** parameter is used, this destination subnet is translated to the <translated-subnet-entity> specified.

Parameter	Description
<translated-subnet-entity>	In a **netmap** rule: **with src**: Modify the source-subnet-entity to the specified translated-subnet-entity, for instance a network created by the **network (Entity)** command. Both network entities must contain one subnet with a matching subnet mask. **with dst**: Modify the destination-subnet-entity to the specified translated-subnet-entity, for instance a network created by the **network (Entity)** command. Both network entities must contain one subnet with a matching subnet mask.
`all`	Remove all rules.

Mode NAT Configuration

Usage You can change the rule order by using the move rule (NAT) command.

Firewall is used in conjunction with NAT. Port forwarding (**portfw**) and masquerade (**masq**) rules do not implicitly permit packets. **Portfw** rules (actions) are applied before any other firewall and **masq** rules (actions) are applied after any other firewall rules. When firewall protection is enabled, all traffic is blocked by default. Use the rule (Firewall) command to configure firewall rules which allow the same application, source and destination entities you configure for the NAT rules.

Netmap **dst** rules are applied to traffic before it reaches the firewall rules, and netmap **src** rules are applied after the firewall has permitted the traffic. Firewall rules must be written to permit the traffic after it has been translated by the netmap **dst** rules.

Entities should have valid interfaces on which inbound and outbound traffic can be properly translated. You can use the ip subnet command and the ipv6 subnet command to configure the interfaces.

Removing a NAT rule for an actively translated flow does not stop it translating immediately. This means subsequent packets in the flow continue to be translated.

The continued translation after the associated NAT rule is removed will only stop when:

- The clear firewall connections command is executed or the flow stops.
- One of the following actions occurs:
  - You can use the clear firewall connections command to manually stop translations immediately, when the associated rule has been deleted regardless whether the firewall feature is actually configured with NAT or not.
  - The NAT rule is cleared when the traffic flow ends naturally, for example, stopped from the source. If the flow is re-initiated from a host, it will not be translated by the firewall, as the rule is deleted after the first flow stopped.

Examples

To perform network address translation and port forward application 'http' from entity 'public' to any with target destination dmz.servers.web_server, use the commands:

```
awplus# configure terminal
awplus(config)# nat
awplus(config-nat)# rule 10 portfw
http from public with dst dmz.servers.web_server
```

To perform network address translation and masquerade application 'http' from entity 'private' to 'public', use the commands:

```
awplus# configure terminal
awplus(config)# nat
awplus(config-nat)# rule 20 masq
http from private to public
```

To use subnet-based NAT to translate the source address of all traffic from 'private.lan' going to 'remote.lan' with the new subnet specified in 'private.global', use the commands:

```
awplus# configure terminal
awplus(config)# nat
awplus(config-nat)# rule 30 netmap all from private.lan to
remote.lan with src private.global
```

To remove NAT rule 10, use the command:

```
awplus(config-nat)# no rule 10
```

Related commands

application

clear firewall connections

host (Entity)

move rule (NAT)

nat

network (Entity)

show nat rule

show nat rule config-check

show running-config nat

zone

Command changes

Version 5.4.7-0.1: **netmap** option added.

show nat

Overview Use this command to show the configuration state of NAT.

Syntax

```
show nat
```

Mode Privileged Exec

Examples To show the configuration state of NAT, use the commands:

```
awplus# show nat
```

Output Figure 58-2: Example output from the **show nat** command

```
awplus#show nat
NAT is enabled
```

Related commands enable (NAT)

show nat rule

Overview Use this command to show information about NAT rules.

Syntax

```
show nat rule [<1-65535>]
```

Parameter	Description
<1-65535>	Rule ID

Mode Privileged Exec

Examples To show information about all NAT rules, use the command:

```
awplus# show nat rule
```

Output Figure 58-3: Example output from the **show nat rule** command

```
awplus#show nat rule

[* = Rule is not valid - see "show nat rule config-check"]
  ID     Action  App        From      To        With       Hits
-------------------------------------------------------------------
* 30     masq    any        private   public    -          0
  10     portfw  http       public    -         dmz.a.b    0
```

To show information about a specific NAT rule, use the command:

```
awplus# show nat rule 10
```

Output Figure 58-4: Example output from the **show nat rule** command

```
awplus#show nat rule 10

[* = Rule is not valid - see "show nat rule config-check"]
  ID     Action  App        From      To        With       Hits
-------------------------------------------------------------------
  10     portfw  http       public    -         dmz.a.b    0
```

Output Parameter	Description
*	Indicates the rule is not valid and cannot be hit, see the show nat rule config-check command.
App	Application name.
From	Source entity.

Output Parameter	Description
`with`	Target entity name.
`To`	Destination entity.
`Hits`	The number of times the NAT rule has been hit.

Related commands

rule (NAT)

show nat rule config-check

show nat rule config-check

Overview Use this command to check configuration validity of NAT rules.

An invalid rule will not be active and cannot be hit.

This command also shows the reasons why a rule is not valid.

Syntax

```
show nat rule config-check
```

Mode Privileged Exec

Usage NAT rules are applied to applications and entities. A rule is not valid if either the application, source entity or destination entity the rule applies to is not configured properly.

To configure applications and entities, see Application and Entity Commands.

Examples To check configuration validity of NAT rules, use the command:

```
awplus# show nat rule config-check
```

Output Figure 58-5: Example output from the **show nat rule config-check** command if rule configuration errors are detected

```
awplus#show nat rule config-check
Rule 10:
  Application does not have a protocol configured
  "From" entity does not exist
  "To" entity has no subnet or host addresses
```

Output Figure 58-6: Example output from the **show nat rule config-check** command if all rules are valid

```
awplus#show nat rule config-check
All rules are valid
```

show running-config nat

Overview Use this command to show the configuration commands that have been used to configure NAT.

Syntax

```
show running-config nat
```

Mode Privileged Exec

Examples To show the configuration commands that have been used to configure NAT, use the commands:

```
awplus# show running-config nat
```

Output Figure 58-7: Example output from the **show running-config nat** command

```
awplus#show running-config nat
nat
 rule 10 masq http from private to public
 rule 20 portfw http from public with dst dmz.servers.wb
 enable
!
```

Part 9: Advanced Network Protection

59 IPS Commands

Introduction

This chapter provides an alphabetical reference of commands used to configure Intrusion Prevention System (IPS). For more information, see the IPS Feature Overview and Configuration_Guide.

The table below lists the IPS commands and their applicable modes.

Figure 59-1: IPS Commands and Applicable Modes

Mode	Command
Privileged Exec	show ips
	show ips categories
	show running-config ips
Global Configuration	ips
IPS Mode	category action (IPS)
	protect (IPS)

Command List

- "category action (IPS)" on page 2671
- "ips" on page 2672
- "protect (IPS)" on page 2673
- "show ips" on page 2674
- "show ips categories" on page 2675
- "show running-config ips" on page 2677

category action (IPS)

Overview Use this command to configure an action for a specified category.

Use the **no** variant of this command to set the default action of alert for a specified category.

Syntax

```
category <category-name> action {alert|deny|disable}
no category <category-name> action
```

Parameter	Description
<category-name>	Category name. A category is a label that helps to classify the nature of traffic, for example, whether it is spammer, spot or spyware and so on. Once IPS protection is enabled, traffic will be categorized according to the available IPS categories. You can use the show ips categories command to view the categories and their actions.
`alert`	Generate a log message. This is the default action.
`deny`	Drop the matching packets. No error message is sent back to the source host.
`disable`	Ignore a specified category. Ignored categories will not be used to categorize traffic.

Default The default action is alert.

Mode IPS Mode

Examples To drop packet categorized as `checksum`, use the commands:

```
awplus# configure terminal
awplus(config)# ips
awplus(config-ips)# category checksum action deny
```

To set the default action for category `checksum`, use the commands:

```
awplus# configure terminal
awplus(config)# ips
awplus(config-ips)# no category checksum action
```

Validation Commands show ips categories

show running-config ips

ips

Overview Use this command to configure IPS.

Use the **no** variant of this command to remove all IPS configuration.

Syntax

```
ips
no ips
```

Mode Global Configuration

Usage This command allows you to enter the IPS mode. The command prompt for this mode is **awplus(config-ips)#**.

In the IPS mode, you can:

- Enable or disable IPS protection, see the protect (IPS) command.
- Configure an action for specified categories, see the category action (IPS) command.

Examples To configure IPS, use the commands:

```
awplus# configure terminal
awplus(config)# ips
awplus(config-ips)#
```

To remove all IPS configuration, use the commands:

```
awplus# configure terminal
awplus(config)# no ips
```

protect (IPS)

Overview Use this command to enable IPS protection .

Use the **no** variant of this command to disable IPS protection.

Syntax

```
protect
no protect
```

Usage Once IPS protection is enabled, traffic will be categorized according to the available IPS categories. See the show ips categories command for the list of available IPS categories.

Default IPS is disabled by default.

Mode IPS Mode

Examples To enable IPS protection, use the commands:

```
awplus# configure terminal
awplus(config)# ips
awplus(config-ips)# protect
```

To disable IPS protection, use the commands:

```
awplus# configure terminal
awplus(config)# ips
awplus(config-ips)# no protect
```

Validation Commands show ips

show running-config ips

show ips

Overview Use this command to show the IPS configuration state and event count for the Intrusion Prevention System (IPS).

Syntax

```
show ips
```

Mode Privileged Exec

Examples To display information about IPS, use the command:

```
awplus# show ips
```

Output Figure 59-2: Example output from the **show ips** command

```
awplus#show ips
Status:      Enabled (Active)
Events:      4
```

Command changes Version 5.4.7-0.1: Event count added to the command output.

show ips categories

Overview Use this command to show the IPS categories and their actions.

Note that if the IPS database provider is configured, this commands shows only the provider's categories.

Syntax

```
show ips categories
```

Mode Privileged Exec

Examples To show the IPS categories and their actions, use the command:

```
awplus# show ips categories
```

Output Figure 59-3: Example output of built-in categories from the **show ips categories** command

```
awplus#show ips categories
Category (* = invalid)       Action
--------------------------------------
  checksum                   alert
  ftp-bounce                 alert
  gre-decoder-events         alert
  http-events                alert
  icmp-decoder-events        alert
  ip-decoder-events          alert
  ppp-decoder-events         alert
  smtp-events                alert
  stream-events              alert
  udp-decoder-events         alert
```

Parameter	Description
`checksum`	Invalid checksums, e.g. IPv4, TCPv4, UDPv4, ICMPv4,TCPv6, UDPv6, ICMPv6.
`ftp-bounce`	GPL FTP PORT bounce attempt.
`gre-decoder events`	GRE anomalies, e.g. GRE packet too small, GRE wrong version, GRE v0 recursion control, GRE v0 flags, GRE v0 header too big, GRE v1 checksum present, GRE v1 routing present, GRE v1 strict source route, GRE v1 recursion control.
`http-events`	HTTP anomalies, e.g. HTTP unknown error, HTTP gzip decompression failed, HTTP request field missing colon, HTTP response field missing colon, HTTP invalid request chunk len, HTTP invalid response chunk len, HTTP status 100-Continue already seen, HTTP unable to match response to request, HTTP invalid server port in request.

Parameter	Description
`icmp-decoder-events`	ICMP anomalies, e.g. IPv6 with ICMPv4 header, ICMPv4 packet too small, ICMPv4 unknown type, ICMPv6 truncated packet, ICMPv6 unknown version.
`ip-decoder-events`	IPv4 & IPv6 anomalies, e.g. IPv4 packet too small, IPv4 header size too small, IPv4 wrong IP version, IPv6 packet too small, IPv6 duplicated Routing extension header, IPv6 duplicated Hop-By-Hop Options extension header, IPv6 DSTOPTS only padding, SLL packet too small, Ethernet packet too small, VLAN header too small, FRAG IPv4 Fragmentation overlap, FRAG IPv6 Packet size too large, IPv4-in-IPv6 invalid protocol, IPv6-in-IPv6 packet too short.
`ppp-decoder-events`	PPP anomalies, e.g. PPP packet too small, PPP IPv6 too small, PPP wrong type, PPPoE wrong code, PPPoE malformed tags.
`smtp-events`	SMTP anomalies, e.g. SMTP invalid reply, SMTP max reply line len exceeded, SMTP tls rejected, SMTP data command rejected.
`stream-events`	TCP anomalies, e.g. 3way handshake with ack in wrong dir, 3way handshake async wrong sequence, 3way handshake right seq wrong ack evasion, 4way handshake SYNACK with wrong ACK, STREAM CLOSEWAIT FIN out of window, STREAM ESTABLISHED SYNACK resend, STREAM FIN invalid ack, STREAM FIN1 ack with wrong seq, STREAM TIMEWAIT ACK with wrong seq, stream-events TCP packet too small, stream-events TCP duplicated option)
`udp-decoder-events`	UDP anomalies, e.g. UDP packet too small, UDP header length too small, UDP invalid header length

show running-config ips

Overview Use this command to show the configuration commands that have been used to configure IPS.

Syntax

```
show running-config dpi
```

Mode Privileged Exec

Examples To show the commands that have been used to configure IPS, use the command:

```
awplus# show running-config ips
```

Output Figure 59-4: Example output from the **show running-config ips** command

```
awplus#show running-config ips
ips
 protect
!
```

60 URL Filtering Commands

Introduction

This chapter provides an alphabetical reference of commands used to configure URL filtering.

URL filtering blocks all HTTP and HTTPS access to a list of websites. You can specify a short list of websites (up to 1000 blacklist and 1000 whitelist rules) using custom blacklists to block URLs and custom whitelists to allow access to URLs.

For more information, see the URL Filtering Feature Overview_and Configuration Guide.

The following table lists the URL filtering commands and their applicable modes.

Figure 60-1: URL filtering commands and applicable modes

Mode	Command
`Privileged Exec`	show running-config url-filter
	show url-filter
	url-filter reload custom-lists
`Global Configuration`	url-filter
`URL Filter Configuration`	blacklist
	protect (URL filtering)
	whitelist

Command List

- "blacklist" on page 2680
- "log url-requests" on page 2681
- "protect (URL filtering)" on page 2682
- "show running-config url-filter" on page 2683
- "show url-filter" on page 2684

- "url-filter reload custom-lists" on page 2685
- "url-filter" on page 2686
- "whitelist" on page 2687

blacklist

Overview Use this command to add a custom blacklist file to the URL filtering configuration.

Use the **no** variant of this command to remove a blacklist from the URL filtering configuration.

Syntax

```
blacklist <url_of_blacklist_file>
no blacklist <url_of_blacklist_file>
```

Parameter	Description
<url_of_blacklist_file>	URL of the blacklist file. The blacklist file can be located in flash, SD card, or USB device.

Mode URL Filter Configuration

Usage You can use custom blacklists to specify URLs to be blocked.

For information about blacklist rule format, see the URL Filtering Feature Overview and Configuration Guide.

You can use the whitelist command to add a whitelist that will override any corresponding blacklist entries.

Examples To add a blacklist that uses a custom file (that is stored on USB, for example) and then enable URL filtering, use the commands:

```
awplus# configure terminal
awplus(config)# url-filter
awplus(config-url-filter)# blacklist usb:/my_blacklist.txt
awplus(config-url-filter)# protect
```

To remove the blacklist file from the URL filtering configuration, use the commands:

```
awplus# configure terminal
awplus(config)# url-filter
awplus(config-url-filter)# no blacklist usb:/my_blacklist.txt
```

Related commands

protect (URL filtering)

show url-filter

url-filter reload custom-lists

whitelist

log url-requests

Overview If URL Filtering is enabled, then by default, black list hits and issues with match criteria and list files are logged.

Use this command to enable logging of all HTTP and HTTPS URL requests (both permitted and denied) passing through the firewall.

Use the **no** variant of this command to disable extra logging of HTTP and HTTPS URL requests passing through the firewall.

Syntax

```
log url-requests
no log url-requests
```

Default Disabled by default.

Mode URL Filter Configuration

Usage When enabled, additional log messages for HTTP and HTTPS URL requests passing through the firewall contain the:

- URL being accessed
- IP address of the user that requested the URL

Example To configure logging of all HTTP and HTTPS URL requests passing through the firewall (permitted as well as denied), use the following commands:

```
awplus# configure terminal
awplus(config)# url-filter
awplus(config-url-filter)# log url-requests
```

Related Commands url-filter

Command changes Version 5.4.7-1.1: command added

protect (URL filtering)

Overview Use this command to enable URL filter protection.

Use the **no** variant of this command to disable URL filter protection without losing the existing URL filter configuration.

Syntax

```
protect
no protect
```

Default URL filter protection is disabled by default and all HTTP and HTTPS traffic is allowed.

Mode URL Filter Configuration

Examples To enable URL filter protection, use the commands:

```
awplus# configure terminal
awplus(config)# url-filter
awplus(config-url-filter)# protect
```

To disable URL filter protection, use the commands:

```
awplus# configure terminal
awplus(config)# url-filter
awplus(config-url-filter)# no protect
```

Related commands show url-filter

Command changes Version 5.4.7-1.1: HTTPS support added.

show running-config url-filter

Overview Use this command to show the running configuration information for URL filtering

Syntax
```
show running-config url-filter
```

Mode Privileged Exec

Examples To show the running configuration of URL filtering, use the command:

```
awplus# show running-config url-filter
```

show url-filter

Overview Use this command to show information about the configuration state of URL filtering.

Syntax

```
show url-filter
```

Mode Privileged Exec

Examples To show information about the configuration state of URL filtering, use the command:

```
awplus# show url-filter
```

Output Figure 60-2: Example output from **show url-filter**

```
awplus#show url-filter

Status:      Enabled (Active)
 Events:     104
Custom blacklists   Entries
 blacklist-example.txt  365
Custom whitelists   Entries
 whitelist-example.txt  4
```

Command changes Version 5.4.7-0.1: Event count added to the command output.

url-filter reload custom-lists

Overview Use this command to reload all custom blacklists and whitelists after editing one or more of them.

Syntax
```
url-filter reload custom-lists
```

Mode Privileged Exec

Examples To reload all custom blacklists and whitelists, use the following command:

```
awplus# url-filter reload custom-lists
```

Related commands blacklist

whitelist

url-filter

Overview Use this command to enter URL Filter Configuration mode and configure URL filtering functionality.

Use the **no** variant of this command to remove all URL filtering configuration.

Syntax

```
url-filter
no url-filter
```

Mode Global Configuration

Usage This command allows you to enter the URL Filter Configuration mode and changes the command prompt to **awplus(config-url-filter)#**.

The URL Filter Configuration mode enables you to:

- Enable URL filtering protection; see the protect (URL filtering) command.
- Configure custom blacklists; see the blacklist command.
- Configure custom whitelists; see the whitelist command.

Examples To enter the URL Filter Configuration mode, use the commands:

```
awplus# configure terminal
awplus(config)# url-filter
awplus(config-url-filter)#
```

To remove all URL filter configuration, use the commands:

```
awplus# configure terminal
awplus(config)# no url-filter
```

Related commands

blacklist

protect (URL filtering)

show running-config

show url-filter

whitelist

whitelist

Overview Use this command to add a custom whitelist file to the URL filtering configuration.

Use the **no** variant of this command to remove a whitelist from the URL filter configuration.

Syntax

```
whitelist <url_of_whitelist_file>
no whitelist <url_of_whitelist_file>
```

Parameter	Description
<url_of_whitelist_file>	URL of the whitelist file. The whitelist file can be located in flash, SD card, or USB device.

Mode URL Filter Configuration

Usage Whitelist matching precedes blacklist matching. You can use custom whitelists to override any corresponding blacklist entries. An HTTP or HTTPS request that includes a URL that matches an entry in a whitelist will be permitted.

For information about whitelist rule format, see the URL Filtering Feature Overview and_Configuration Guide.

Examples To add a whitelist that uses a custom file (that is stored on USB, for example) and then enable URL filtering, use the commands:

```
awplus# configure terminal
awplus(config)# url-filter
awplus(config-url-filter)# whitelist usb:/my_whitelist.txt
awplus(config-url-filter)# protect
```

To remove the whitelist file from the URL filtering configuration, use the commands:

```
awplus# configure terminal
awplus(config)# url-filter
awplus(config-url-filter)# no whitelist usb:/my_whitelist.txt
```

Related commands

blacklist

protect (URL filtering)

show url-filter

url-filter reload custom-lists

Command changes Version 5.4.7-1.1: HTTPS support added.

Part 10: Virtual Private Networks (VPNs)

61 IPsec Commands

Introduction

This chapter provides an alphabetical reference of commands used to configure Internet Protocol Security (IPsec) tunnel.

For introductory information about IPSec tunnel in AlliedWare Plus, including overview and configuration information, see the Internet ProtocolSecurity (IPSec) Feature Overview and_Configuration Guide.

Command List

- "clear isakmp sa" on page 2691
- "crypto ipsec profile" on page 2692
- "crypto isakmp key" on page 2694
- "crypto isakmp peer" on page 2696
- "crypto isakmp profile" on page 2698
- "debug isakmp" on page 2700
- "dpd-interval" on page 2702
- "dpd-timeout" on page 2703
- "interface tunnel" on page 2704
- "lifetime (IPsec Profile)" on page 2705
- "lifetime (ISAKMP Profile)" on page 2706
- "no debug isakmp" on page 2707
- "pfs" on page 2708
- "show debugging isakmp" on page 2710
- "show interface tunnel (IPsec)" on page 2711
- "show ipsec counters" on page 2712
- "show ipsec peer" on page 2713
- "show ipsec policy" on page 2714

- "show ipsec profile" on page 2715
- "show ipsec sa" on page 2717
- "show isakmp counters" on page 2718
- "show isakmp key (IPsec)" on page 2719
- "show isakmp peer" on page 2720
- "show isakmp profile" on page 2721
- "show isakmp sa" on page 2723
- "transform (IPsec Profile)" on page 2724
- "transform (ISAKMP Profile)" on page 2725
- "tunnel destination (IPsec)" on page 2727
- "tunnel local name (IPsec)" on page 2729
- "tunnel local selector" on page 2730
- "tunnel mode (IPsec)" on page 2732
- "tunnel protection ipsec (IPsec)" on page 2733
- "tunnel remote name (IPsec)" on page 2734
- "tunnel remote selector" on page 2735
- "tunnel source (IPsec)" on page 2737
- "undebug isakmp" on page 2739
- "version (ISAKMP)" on page 2740

clear isakmp sa

Overview Use this command to delete Internet Security Association Key Management Protocol (ISAKMP) Security Associations (SAs). SAs specify the Security Parameter Index (SPI), protocols, algorithms and keys for protecting a single flow of traffic between two IPSec peers. For more information about SA, see the Internet Protocol Security (IPSec) Feature Overview and Configuration Guide.

Syntax

```
clear [crypto] isakmp sa [peer <ipv4-addr>|<ipv6-addr>|
<hostname>] [force]
```

Parameter	Description
`<ipv4-addr>`	Destination IPv4 address. The IPv4 address uses the format A.B.C.D.
`<ipv6-addr>`	Destination IPv6 address. The IPv4 address uses the format X:X::X:X.
`<hostname>`	Destination host name.
`force`	Force to clear ISAKMP SAs without negotiating with the peer.

Mode Privileged Exec

Examples To delete the ISAKMP security associations at the peer for an IPv6 address, use the command:

```
awplus# clear isakmp sa peer 2001:0db8::1
```

To delete the ISAKMP security associations at the peer for an IPv4 address, use the command:

```
awplus# clear isakmp sa peer 192.168.2.1
```

To delete the ISAKMP security associations at the peer for a host name, use the command:

```
awplus# clear isakmp sa peer remote.example.com
```

Related Commands crypto isakmp key

show isakmp sa

Command Changes Version 5.4.7-0.1: Parameter <hostname> added for DDNS feature.

crypto ipsec profile

Overview Use this command to configure a custom IPsec profile.

An IPsec profile comprises one or more transforms that can be configured by using the transform (IPsec Profile) command.

Use the **no** variant to delete a previously created profile.

Syntax

```
crypto ipsec profile <profile_name>
no crypto ipsec profile <profile_name>
```

Parameter	Description
<profile_name>	Profile name. Profile names are case insensitive and can be up to 64 characters long composed of printable ASCII characters. Profile names can have only letters from a to z and A to Z, numbers from 0 to 9, - (dash), or _ (underscore).

Default The default IPsec profile with transforms in order of preference is listed in the following table. Which IPsec profile will actually be used depends on how the negotiation between the peers is carried out when establishing the connection. Note that you cannot delete or edit the default profile. Expiry time of 8 hours applies to the default IPsec profile.

Table 61-1: IPsec default profile

Attribute	Transform 1	Transform 2	Transform 3	Transform 4	Transform 5	Transform 6
Protocol	ESP	ESP	ESP	ESP	ESP	ESP
Encryption (all CBC)	AES256	AES256	AES128	AES128	3DES	3DES
Integrity (all HMAC)	SHA256	SHA1	SHA256	SHA1	SHA256	SHA1

Mode Global Configuration

Examples To configure a custom IPsec profile for establishing IPSec SAs with a remote peer, use the following commands:

```
awplus# configure terminal
awplus(config)# crypto ipsec profile my_profile
awplus(config-ipsec-profile)# transform 2 protocol esp
integrity sha1 encryption 3des
```

To delete a custom profile, use the following commands:

```
awplus# configure terminal
awplus(config)# no crypto ipsec profile my_profile
```

Related Commands

lifetime (IPsec Profile)

transform (IPsec Profile)

Validation Commands

show ipsec profile

crypto isakmp key

Overview Use this command to configure a pre-shared authentication key.

Pre-shared key authentication uses optionally encrypted shared keys identified by hostname, IPv4 or IPv6 address. Pre-shared keys are not viewable and stored encrypted in the running-configuration.

You must configure this key whenever you specify pre-shared keys in an (Internet Key Exchange) IKE policy and at both peers.

To use the **no** variant to remove a previously created pre-shared key.

Syntax

```
crypto isakmp key [8] <key> {hostname <hostname>|address
{<ipv4-addr>|<ipv6-addr>}}
```

```
no crypto isakmp key [8] <key> {hostname <hostname>|address
{<ipv4-addr>|<ipv6-addr>}
```

Parameter	Description
`crypto`	Security specific command.
`isakmp`	Internet Security Association Key Management Protocol provides a common framework for key management implementations.
`key`	Pre-shared key.
<key>	Specify the pre-shared key. Us any combination of alphanumeric characters up to 128 bytes.
`8`	Specifies that an encrypted key follows.
<hostname>	Destination hostname.
<ipv4-addr>	Destination IPv4 address. The IPv4 address uses the format A.B.C.D.
<ipv6-addr>	Destination IPv6 address. The IPv6 address uses the format X:X::X:X.

Default ISAKMP keys do not exist.

Mode Global Configuration

Examples To configure a pre-shared authentication key for a destination host, use the commands below:

```
awplus# configure terminal
```

```
awplus(config)# crypto isakmp key friend hostname
mypeer@my.domain.com
```

To configure a pre-shared authentication key at a peer with IPv4 address, use the commands below:

```
awplus# configure terminal

awplus(config)# crypto isakmp key friend address
192.168.1.1
```

To configure a pre-shared encrypted authentication key at a peer with IPv4 address, use the commands below:

```
awplus# configure terminal

awplus(config)# crypto isakmp
key 8 Nhe6ioQmzbysQaJr6Du+cA== address 192.168.1.2
```

To remove a pre-shared key at a peer, use the commands below:

```
awplus# configure terminal

awplus(config)# no crypto isakmp key friend hostname
mypeer@my.domain.com
```

Related Commands

show isakmp key (IPsec)

crypto isakmp peer

Overview Use this command to configure a peer to use a specific ISAKMP profile.

Use the **no** variant to set the peer back to using the default profile.

Syntax

```
crypto isakmp peer address {<ipv4-addr>|<ipv6-addr>} hostname
<hostname> profile <profile-name>
```

```
crypto isakmp peer dynamic profile <profile-name>
```

```
no crypto isakmp peer address {<ipv4-addr>|<ipv6-addr>}
hostname <hostname> profile
```

```
no crypto isakmp peer dynamic profile
```

Parameter	Description
<ipv4-addr>	Destination IPv4 address. The IPv4 address uses the format A.B.C.D.
<ipv6-addr>	Destination IPv6 address. The IPv6 address uses the format X:X::X:X.
<hostname>	Remote endpoint with a host name as the destination.
dynamic	Remote endpoint with a dynamic IP address.
<profile-name>	Profile name.

Default By default, all peers use the default profile.

Mode Global Configuration

Examples To configure a profile for a peer with a dynamic IP address, use the following commands:

```
awplus# configure terminal
awplus(config)# crypto isakmp peer dynamic profile peer_profile
```

To configure a profile for a peer with IPv4 address, use the following commands:

```
awplus# configure terminal
awplus(config)# crypto isakmp peer address 192.168.1.2 profile
peer_profile
```

To set the profile for the peer back to default, use the following commands:

```
awplus# configure terminal
awplus(config)# no crypto isakmp peer dynamic profile
awplus# configure terminal
```

To configure a profile for a peer with a host name, use the following commands:

```
awplus(config)# crypto isakmp peer hostname user.domain.com
profile peer_profile
```

```
awplus# configure terminal
```

To set the profile for the peer back to the default, use the following commands:

```
awplus(config)# no crypto isakmp peer hostname user.domain.com
profile peer_profile
```

Related Commands show isakmp peer

Command Changes Version 5.4.7-0.1: Parameter <hostname> added for DDNS feature.

crypto isakmp profile

Overview Use this command to configure a custom ISAKMP profile.

An ISAKMP profile comprises one or more transforms that can be configured by using the transform (ISAKMP Profile) command.

Use the **no** variant to delete a previously created profile.

Syntax

```
crypto isakmp profile <profile_name>
no crypto isakmp profile <profile_name>
```

Parameter	Description
<profile_name>	Profile name. Profile names are case insensitive and can be up to 64 characters long composed of printable ASCII characters. Profile names can have only letters from a to z and A to Z, numbers from 0 to 9, - (dash), or _ (underscore).

Default Which ISAKMP profile transform will actually be used depends on how the negotiation between the peers is carried out when establishing the connection. For more information about default ISAKMP profiles, see the following table. Note that you cannot delete or edit the default profile. Expiry time of 24 hours applies to the default profile.

Table 61-2: ISAKMP default profile

Attribute	Encryption	Integrity	Group	Authentication
Transform 1	AES256	SHA256	14	Pre-shared
Transform 2	AES256	SHA256	16	Pre-shared
Transform 3	AES256	SHA1	14	Pre-shared
Transform 4	AES256	SHA1	16	Pre-shared
Transform 5	AES128	SHA256	14	Pre-shared
Transform 6	AES128	SHA256	16	Pre-shared
Transform 7	AES128	SHA1	14	Pre-shared
Transform 8	AES128	SHA1	16	Pre-shared
Transform 9	3DES	SHA256	14	Pre-shared
Transform 10	3DES	SHA256	16	Pre-shared
Transform 11	3DES	SHA1	14	Pre-shared
Transform 12	3DES	SHA1	16	Pre-shared

Mode Global Configuration

Examples

To configure a custom ISAKMP profile for establishing ISAKMP SAs with a remote peer, use the following commands:

```
awplus# configure terminal
awplus(config)# crypto isakmp profile my_profile
awplus(config-isakmp-profile)# transform 2 integrity sha1
encryption 3des group 5
```

To delete a custom profile, use the following commands:

```
awplus# configure terminal
awplus(config)# no crypto isakmp profile my_profile
```

Related Commands

dpd-interval

dpd-timeout

lifetime (ISAKMP Profile)

transform (ISAKMP Profile)

version (ISAKMP)

Validation Commands

show isakmp profile

debug isakmp

Overview Use this command to enable debugging ISAKMP.

To disable debugging ISAKMP, see no debug isakmp or undebug isakmp.

Syntax `debug [crypto] isakmp [info|trace|all]`

Parameter	Description
`debug`	Debugging function.
`crypto`	Security specific command.
`isakmp`	Internet Security Association Key Management Protocol provides a common framework for key management implementations.
`info`	Informational debug messages such as protocol events.
`trace`	Verbose debug messages including protocol events and message traces.
`all`	All debug enabled.

Mode Privileged Exec

Examples Figure 61-1: Example output from the **debug isakmp** command on the console.

```
awplus#debug isakmp info
awplus#terminal monitor
% Warning: Console logging enabled
awplus#show ipsec peer
21:03:42 awplus IMISH[30349]: show ipsec peer


10.2.0.10
  IPSEC
    Selector: 0.0.0.0/0 0.0.0.0/0   tunnel1
    Profile: default
  ISAKMP
    LocalID: 10.1.0.10
    RemoteID: 10.2.0.10
awplus#ping 192.168.1.2

PING 192.168.1.2 (192.168.1.2) 56(84) bytes of data.
21:04:13 awplus iked: [DEBUG]: ike_pfkey.c:622:sadb_acquire_callback():
sadb_acquire_callback: seq=6 reqid=409
6 satype=96 sa_src=10.1.0.10[0] sa_dst=10.2.0.10[0] samode=229 selid=1
21:04:13 awplus iked: [DEBUG]: isakmp.c:918:isakmp_initiate(): new request (seq:6
spid:1 reqid:4096)
21:04:13 awplus iked: [DEBUG]: ikev2.c:758:ikev2_initiate(): creating new ike_sa
21:04:13 awplus iked: [DEBUG]: ike_sa.c:431:ikev2_allocate_sa():
ikev2_create_sa((nil), 10.1.0.10[500], 10.2.0
.10[500], 0x810b678)
21:04:13 awplus iked: [DEBUG]: ike_sa.c:434:ikev2_allocate_sa(): sa: 0x810d3a0
21:04:13 awplus iked: [DEBUG]: ikev2.c:800:ikev2_initiate(): child_sa: 0x810dd60
21:04:13 awplus iked: [DEBUG]: ikev2_child.c:139:ikev2_child_state_set(): child_sa
0x810dd60 state IDLING -> G
ETSPI
21:04:13 awplus iked: [DEBUG]: ike_pfkey.c:269:sadb_getspi(): sadb_getspi: seq=6,
satype=96
21:04:13 awplus iked: [DEBUG]: ike_pfkey.c:622:sadb_acquire_callback():
sadb_acquire_callback: seq=7 reqid=409
6 satype=96 sa_src=10.1.0.10[0] sa_dst=10.2.0.10[0] samode=229 selid=1
21:04:13 awplus iked: [DEBUG]: isakmp.c:918:isakmp_initiate(): new request (seq:7
spid:1 reqid:4096)
21:04:13 awplus iked: [DEBUG]: ikev2.c:800:ikev2_initiate(): child_sa: 0x810ec68
21:04:13 awplus iked: [DEBUG]: ikev2_child.c:139:ikev2_child_state_set(): child_sa
0x810ec68 state IDLING -> G
ETSPI

awplus#no debug isakmp
awplus#show debugging isakmp

ISAKMP Debugging status:
  ISAKMP Informational debugging is disabled
  ISAKMP Trace debugging is disabled
```

Related Commands

no debug isakmp

undebug isakmp

dpd-interval

Overview Use this command to specify the Dead Peer Detection (DPD) interval for an ISAKMP profile.

DPD is an IKE mechanism using a form of keep-alive to determine if a tunnel peer is still active.

The interval parameter specifies the amount of time the device waits for traffic from its peer before sending a DPD acknowledgment message.

Use the **no** variant to set the interval to its default (30 seconds).

Syntax

```
dpd-interval <10-86400>
no dpd-interval
```

Parameter	Description
<10-86400>	Interval expressed in seconds.

Default If you do not specify an interval, the default interval of 30 seconds applies.

Mode ISAKMP Profile Configuration

Examples To specify a DPD interval, use the following commands:

```
awplus(config)# crypto isakmp profile my_profile
awplus(config-isakmp-profile)# dpd-interval 20
```

To set the interval to its default, use the following commands:

```
awplus(config-isakmp-profile)# no dpd-interval
```

Related Commands crypto isakmp profile

Validation Commands show isakmp profile

dpd-timeout

Overview Use this command to specify a Dead Peer Detection (DPD) timeout for IKEv1.

DPD is an IKE mechanism using a form of keep-alive to determine if a tunnel peer is still active.

DPD timeout defines the timeout interval after which all connections to a peer are deleted in case of inactivity. This only applies to IKEv1, in IKEv2 the default retransmission timeout applies as every exchange is used to detect dead peers.

Use the **no** variant to set the timeout to its default (150 seconds).

Syntax

```
dpd-timeout <10-86400>
no dpd-timeout
```

Parameter	Description
<10-86400>	Timeout in seconds.

Default If you do not specify a timeout, the default timeout of 150 seconds applies.

Mode ISAKMP Profile Configuration

Examples To specify a DPD timeout for IKEv1, use the following commands:

```
awplus(config)# crypto isakmp profile my_profile
awplus(config-isakmp-profile)# dpd-timeout 200
```

To set the timeout to its default, use the following command:

```
awplus(config-isakmp-profile)# no dpd-timeout
```

Related Commands crypto isakmp profile

Related Commands show isakmp profile

interface tunnel

Overview Use this command to create a tunnel interface. Tunnel interfaces are identified by an index identifier that is an integer in the range from 0 through 255. Note that the **tunnel mode** command is needed to enable the tunnel.

Use the **no** variant of this command to remove a previously created tunnel interface.

Syntax

```
interface tunnel<0-255>
no interface tunnel<tunnel-index>
```

Parameter	Description
<0-255>	Specify a tunnel interface index identifier in the range from 0 through 255.

Default Tunnel interfaces do not exist.

Mode Global Configuration

Usage This command creates a new tunnel interface to configure in Global Configuration mode.

This command is also used to enter Interface Configuration mode for existing tunnel interfaces.

Usage Note that you need to designate a tunnel mode, tunnel source address, tunnel destination address, IP address of tunnel interface and use tunnel protection ipsec (IPsec) command to encrypt and authenticate the packets travelling though the tunnel.

Examples To configure an IPSec tunnel interface with index 100, enter the commands below:

```
awplus# configure terminal
awplus(config)# interface tunnel100
awplus(config-if)# tunnel mode ipsec ipv4
```

To remove the IPSec tunnel interface `tunnel100`, enter the commands below:

```
awplus# configure terminal
awplus(config)# no interface tunnel100
```

lifetime (IPsec Profile)

Overview Use this command to specify a lifetime for an IPsec SA.

Lifetime measures how long the IPsec SA can be maintained before it expires. Lifetime prevents a connection from being used too long.

Use the **no** variant to set the lifetime to default (28800 seconds).

Syntax

```
lifetime seconds <300-31449600>
no lifetime seconds
```

Parameter	Description
<300-31449600>	Lifetime in seconds.

Default If you do not specify a lifetime, the default lifetime of 28800 seconds (8 hours) applies.

Mode IPsec Profile Configuration

Examples To specify a lifetime for an IPsec SA, use the following commands:

```
awplus(config)# crypto ipsec profile my_profile
awplus(config-ipsec-profile)# lifetime seconds 400
```

To set the lifetime to its default, use the following commands:

```
awplus(config)# crypto ipsec profile my_profile
awplus(config-ipsec-profile)# no lifetime seconds
```

Related Commands crypto ipsec profile

lifetime (ISAKMP Profile)

Overview Use this command to specify a lifetime for an ISAKMP SA.

Lifetime measures how long the ISAKMP SA can be maintained before it expires. Lifetime prevents a connection from being used too long.

Use the **no** variant to set the lifetime to default (86400 seconds).

Syntax

```
lifetime <600-31449600>
no lifetime
```

Parameter	Description
<600-31449600>	Lifetime in seconds.

Default If you do not specify a lifetime, the default lifetime of 86400 seconds (8 hours) applies.

Mode ISAKMP Profile Configuration

Examples To specify a lifetime for an ISAKMP SA, use the following commands:

```
awplus(config)# configure isakmp profile my_profile
awplus(config-isakmp-profile)# lifetime 700
```

To set the lifetime to its default, use the following commands:

```
awplus(config-isakmp-profile)# no lifetime
```

Related Commands crypto isakmp profile

no debug isakmp

Overview Use this command to disable debugging ISAKMP.

To enable debugging ISAKMP, see debug isakmp.

Syntax

```
no [crypto] isakmp [info|trace|all]
```

Parameter	Description
`no`	Disable debugging function.
`crypto`	Security specific.
`isakmp`	Internet Security Association Key Management Protocol provides a common framework for key management implementations.
`info`	Informational debug messages such as protocol events.
`trace`	Verbose debug messages including protocol events and message traces.
`all`	All debug enabled.

Mode Privileged Exec

Related Commands debug isakmp

undebug isakmp

pfs

Overview Use this command to enable PFS and set a Diffie-Hellman group for PFS in an IPsec profile.

Use the **no** variant to disable PFS.

Syntax

```
pfs {2|5|14|15|16|18}
no pfs
```

Parameter	Description
2	1024-bit MODP Group
5	1536-bit MODP Group
14	2048-bit MODP Group
15	3072-bit MODP Group
16	4096-bit MODP Group
18	8192-bit MODP Group

Default PFS is disabled.

Mode IPsec Profile Configuration

Usage Perfect Forward Secrecy (PFS) ensures generated keys, for example IPsec SA keys are not compromised if any other keys, for example, ISAKMP SA keys are compromised.

The specified PFS group must match the PFS group setting on the peer - especially when IKEv2 is used for ISAKMP SA negotiation. With IKEv2, if there is a PFS group mismatch an IPsec SA will be established and the tunnel will come up because PFS is not required for the initial child SA negotiation. However, when the IPsec SA rekeys it will fail due to the PFS group mismatch, and upon IPsec SA expiry the tunnel will no longer be able to carry traffic.

Examples To enable PFS and set a Diffie-Hellman group for PFS, use the following commands:

```
awplus(config)# crypto ipsec profile my_profile
awplus(config-ipsec-profile)# pfs 15
```

To disable PFS, use the following command:

```
awplus(config-ipsec-profile)# no pfs
```

Related Commands crypto ipsec profile

Validation Commands show ipsec profile

show debugging isakmp

Overview Use this command to show if debugging ISAKMP is enabled.

Syntax

```
show debugging [crypto] isakmp
```

Parameter	Description
`debugging`	Debugging information.
`crypto`	Security specific command.
`isakmp`	Internet Security Association Key Management Protocol provides a common framework for key management implementations.

Mode Privileged Exec

Examples To show if debugging ISAKMP is enabled, enter the command below:

```
awplus# show debugging isakmp
```

Output Figure 61-2: Example output from the **show debugging isakmp** command

```
awplus#show debugging isakmp
ISAKMP Debugging status:
  ISAKMP Informational debugging is enabled
  ISAKMP Trace debugging is disabled
```

show interface tunnel (IPsec)

Overview Use this command to display status information of tunnels.

The tunnel remains inactive if no valid tunnel source or tunnel destination is configured.

Syntax `show interface tunnel <tunnel-index>`

Parameter	Description
`tunnel`	Specify this parameter to display tunnel status information of a given tunnel identified by the <*tunnel-index*> parameter.
`<tunnel-index>`	Specify a tunnel index in the range from 0 through 255.

Mode Privileged Exec

Examples To display status information for IPsec `tunnel1`, enter the command below:

```
awplus# show interface tunnel1
```

Output Figure 61-3: Example output from the **show interface tunnel** command

```
awplus#show interface tunnel1
Interface tunnel1
  Link is UP, administrative state is UP
  Hardware is Tunnel
  IPv4 address 192.168.1.1/24 point-to-point 192.168.1.255
  index 21 metric 1 mtu 1438
  <UP,POINT-TO-POINT,RUNNING,MULTICAST>
  SNMP link-status traps: Disabled
  Tunnel source 10.1.0.10, destination 10.2.0.10
  Tunnel name local 10.1.0.10, remote 10.2.0.10
  Tunnel traffic selectors (ID, local, remote)
    1    192.168.2.0/24             192.168.3.0/24
    2    0.0.0.0/0                  192.168.10.0/24
  Tunnel protocol/transport ipsec ipv4, key disabled, sequencing disabled
  Checksumming of packets disabled, path MTU discovery disabled
  Tunnel protection via IPsec (profile "default")
    input packets 11, bytes 924, dropped 0, multicast packets 0
    output packets 0, bytes 0, multicast packets 0 broadcast packets 0
  Time since last state change: 0 days 03:23:10
```

Related Commands interface tunnel

show ipsec counters

Overview Use this command to show IPSec counters.

Syntax

```
show [crypto] ipsec counters
```

Parameter	Description
`crypto`	Security specific command.
`ipsec`	Internet Protocol Security defines the protection of IP packets using encryption and authentication.
`counters`	Show IPSec transformation statistic.

Mode Privileged Exec

Examples To show IPSec counters, enter the command below:

```
awplus# show ipsec counters
```

Output Figure 61-4: Example output from the **show ipsec counters** command

```
awplus#show ipsec counters
Name                          Value
-------------------------------------
InError                       0
InBufferError                 0
InHdrError                    0
InNoStates                    0
InStateProtoError             0
InStateModeError              0
InStateSeqError               0
InStateExpired                0
InStateMismatch               0
InStateInvalid                0
InTmplMismatch                0
InNoPols                      0
InPolBlock                    0
InPolError                    0
OutError                      0
OutBundleGenError             0
OutBundleCheckError           0
OutNoStates                   0
OutStateProtoError            0
OutStateModeError             0
OutStateSeqError              0
OutStateExpired               0
OutPolBlock                   0
OutPolDead                    0
OutPolError                   0
FwdHdrError                   0
```

show ipsec peer

Overview Use this command to show IPSec information on a per peer basis.

Syntax `show [crypto] ipsec peer [<hostname>|<ipv4-addr>|<ipv6-addr>]`

Parameter	Description
`crypto`	Security specific command.
`peer`	Remote endpoint.
<hostname>	Destination hostname.
<ipv4-addr>	Destination IPv4 address. The IPv4 address uses the format A.B.C.D.
<ipv6-addr>	Destination IPv6 address. The IPv6 address uses the format X:X::X:X.

Mode Privileged Exec

Examples To show IPSec information on a per peer basis, enter the command below:

```
awplus# show ipsec peer 172.16.0.1
```

Output Figure 61-5: Example output from the **show ipsec peer** command

```
awplus#show ipsec peer 172.16.0.1
172.16.0.2
  IPsec
    Selectors (local:remote)
      Address:  0.0.0.0/0 : 0.0.0.0/0
      Protocol: any:any
      Port:     any:any
      Mark:     1:1
    Profile: default
    SAs:
      SPI (In:Out): ca865389:c9c7e3d3
        Selectors:  192.168.1.0/24 : 192.168.2.0/24
        Proto:      ESP
        Mode:       tunnel
        Encryption: AES256
        Integrity:  SHA256
        Expires:    28796s
  ISAKMP
    LocalID:  172.16.0.1
    RemoteID: 172.16.0.2
    SAs:
      Cookies (Initiator:Responder) 03071749781e5992:93f8457816d3d40d
        Ver:            2           Lifetime: 84569s    State: Established
        Authentication: PSK         Group:    14
        Encryption:     AES256      NATT:     no
        Integrity:      SHA256      DPD:      yes
```

show ipsec policy

Overview Use this command to show IPSec policies.

Syntax

```
show [crypto] ipsec policy
```

Parameter	Description
`crypto`	Security specific command.
`ipsec`	Internet Protocol Security defines the protection of IP packets using encryption and authentication.
`policy`	Policy.

Mode Privileged Exec

Examples To show IPSec policies, enter the command below:

```
awplus# show ipsec policy
```

Output Figure 61-6: Example output from the **show ipsec policy** command

```
awplus#show ipsec policy
Traffic Selector (addresses protocol ports interface)
  Profile           Peer
0.0.0.0/0 0.0.0.0/0   tunnel1
  default           10.2.0.10
```

show ipsec profile

Overview Use this command to show IPsec default and custom profiles.

An IPsec profile consists of a set of parameters that are used by IPsec when establishing IPsec SAs with a remote peer. AlliedWare Plus provides default ISAKMP and IPsec profiles that contain a priority ordered set of transforms that are considered secure by the security community.

Syntax `show [crypto] ipsec pofile [<profile_name>]`

Parameter	Description
`crypto`	Security specific.
`ipsec`	Internet Protocol Security defines the protection of IP packets using encryption and authentication.
`profile`	An IPsec profile consists of a set of parameters that are used by IPsec SAs with a remote peer.
<profile_name>	Custom profile name.

Mode Privileged Exec

Examples To show all IPsec profiles, including the default profile, use the following command:

```
awplus# show ipsec profile
```

Output Figure 61-7: Example output from the **show ipsec profile** command

```
awplus#show ipsec profile
IPsec Profile: default
  Replay-window:  32
  Expiry:         8h
  PFS group:      disabled
  Transforms:
      Protocol  Integrity   Encryption
    1    ESP       SHA256      AES256
    2    ESP       SHA1        AES256
    3    ESP       SHA256      AES128
    4    ESP       SHA1        AES128
    5    ESP       SHA256      3DES
    6    ESP       SHA1        3DES
IPsec Profile: my_profile
  Replay-window:  32
  Expiry:         8h
  PFS group:      disabled
  Transforms:
       Protocol  Integrity   Encryption
    2    ESP       SHA1        3DES
```

Examples To show IPsec profile “my_profile”, use the command:

```
awplus# show ipsec profile my_profile
```

Output Figure 61-8: Example output from the **show ipsec profile** command

```
awplus#show ipsec profile my_profile
IPsec Profile: my_profile
  Replay-window:  32
  Expiry:         8h
  PFS group:      disabled
  Transforms:
       Protocol  Integrity   Encryption
    2    ESP       SHA1        3DES
```

Related Commands crypto ipsec profile

show ipsec sa

Overview Use this command to view the settings used by current security associations. SAs specify the Security Parameter Index (SPI), protocols, algorithms and keys for protecting a single flow of traffic between two IPSec peers. For more information about SA, see the Internet Protocol Security (IPSec) Feature Overview and Configuration Guide.

Syntax

```
show [crypto] ipsec sa
```

Parameter	Description
`crypto`	Security specific command.
`ipsec`	Internet Protocol Security defines the protection of IP packets using encryption and authentication.
`sa`	Security Association.

Mode Privileged Exec

Examples To view the settings used by current security associations, enter the command below:

```
awplus# show ipsec sa
```

Output Figure 61-9: Example output from the **show ipsec sa** command

```
awplus#show ipsec sa
------------------------------------------------------------------------
Peer                SPI (in:out)          Mode          Proto  Expires
                    Encryption            Integrity     PFS
------------------------------------------------------------------------
10.0.0.20           c2d8c150:7b24d3f5     tunnel        ESP    28786s
                    AES256                SHA256        -
10.0.0.22           c6c2ad0d:0d008e3d     tunnel        ESP    3582s
                    3DES                  SHA1          -
10.0.0.25           cb36f9dd:cd87a834     tunnel        ESP    28778s
                    AES128                SHA1          2
```

show isakmp counters

Overview Use this command to show ISAKMP counters.

Syntax

```
show [crypto] isakmp counters
```

Parameter	Description
`crypto`	Security specific command.
`isakmp`	Internet Security Association Key Management Protocol provides a common framework for key management implementations.
`counters`	Show ISAKMP counters.

Mode Privileged Exec

Examples To show ISAKMP counters, enter the command below:

```
awplus# show isakmp counters
```

Output Figure 61-10: Example output from the **show isakmp counters** command

```
awplus#show isakmp counters
Name                          Value
-------------------------------------
ikeInitRekey                  0
ikeRspRekey                   0
ikeChildSaRekey               0
ikeInInvalid                  0
ikeInInvalidSpi               0
ikeInInitReq                  0
ikeInInitRsp                  0
ikeOutInitReq                 0
ikeOutInitRsp                 0
ikeInAuthReq                  0
ikeInAuthRsp                  0
ikeOutAuthReq                 0
ikeOutAuthRsp                 0
ikeInCrChildReq               0
ikeInCrChildRsp               0
ikeOutCrChildReq              0
ikeOutCrChildRsp              0
ikeInInfoReq                  0
ikeInInfoRsp                  0
ikeOutInfoReq                 0
ikeOutInfoRsp                 0
```

show isakmp key (IPsec)

Overview Use this command to show the ISAKMP pre-shared key. Pre-shared key authentication using optionally encrypted shared keys identified by hostname, IPv4 or IPv6 address. Pre-shared keys are not viewable and stored encrypted in the running-configuration.

Syntax

```
show [crypto] isakmp key
```

Parameter	Description
`crypto`	Security specific command.
`isakmp`	Internet Security Association Key Management Protocol provides a common framework for key management implementations.
`key`	Pre-shared key.

Mode Privileged Exec

Examples To show ISAKMP pre-shared key, enter the command below:

```
awplus# show isakmp key
```

Output Figure 61-11: Example output from the **show isakmp key** command

```
awplus#show isakmp key
Hostname/IP address             Key
10.2.0.10                       mytunnelkey
```

show isakmp peer

Overview Use this command to show ISAKMP profile and key status for ISAKMP peers.

Syntax

```
show isakmp peer [<hostname>|<ipv4-addr>|<ipv6-addr>]
```

Parameter	Description
<hostname>	Destination hostname.
<ipv4-addr>	Destination IPv4 address. The IPv4 address uses the format A.B.C.D.
<ipv6-addr>	Destination IPv6 address. The IPv6 address uses the format X:X::X:X.

Mode Privileged Exec

Examples To show ISAKMP profile and key status for ISAKMP peers, use the following command:

```
awplus# show isakmp peer
```

Output Figure 61-12: Example output from the **show isakmp peer** command

```
awplus#show isakmp peer
Peer                        Profile (* incomplete)                    Key
-------------------------------------------------------------------------------
example.com                 LEGACY                                    Not Found
2.2.2.2                     default                                   PSK
1.1.1.1                     SECURE                                    PSK
```

Related Commands crypto isakmp peer

Command changes Version 5.4.7-0.1: Parameter <hostname> added for DDNS feature.

show isakmp profile

Overview Use this command to show ISAKMP default and custom profiles.

Syntax

```
show [crypto] isakmp profile [<profile_name>]
```

Parameter	Description
<profile_name>	Custom profile name.

Mode Privileged Exec

Examples To show ISAKMP profiles, including the default profile, use the command:

```
awplus# show isakmp profile
```

Output Figure 61-13: Example output from the **show isakmp profile** command

```
awplus#show isakmp profile
ISAKMP Profile: default
  Version:        IKEv2
  Authentication: PSK
  Expiry:         24h
  DPD Interval:   30s
  Transforms:
       Integrity   Encryption  DH Group
    1    SHA256      AES256      14
    2    SHA256      AES256      16
    3    SHA1        AES256      14
    4    SHA1        AES256      16
    5    SHA256      AES128      14
    6    SHA256      AES128      16
    7    SHA1        AES128      14
    8    SHA1        AES128      16
    9    SHA256      3DES        14
   10    SHA256      3DES        16
   11    SHA1        3DES        14
   12    SHA1        3DES        16

ISAKMP Profile: my_profile
  Version:        IKEv2
  Authentication: PSK
  Expiry:         24h
  DPD Interval:   30s
  Transforms:
       Integrity   Encryption  DH Group
    2    SHA1        3DES         5
```

Examples To show ISAKMP profile “my_profile”, use the command:

```
awplus# show isakmp profile my_profile
```

Output Figure 61-14: Example output from the **show isakmp profile** command

```
awplus#show isakmp profile my_profile
ISAKMP Profile: my_profile
  Version:        IKEv2
  Authentication: PSK
  Expiry:         24h
  DPD Interval:   30s
  Transforms:
       Integrity   Encryption  DH Group
    2    SHA1         3DES         5
```

Related Commands crypto isakmp profile

show isakmp sa

Overview Use this command to show current IKE security associations at a peer.

Syntax

```
show [crypto] isakmp sa
```

Parameter	Description
`crypto`	Security specific command.
`isakmp`	Internet Security Association Key Management Protocol provides a common framework for key management implementations.
`sa`	Security Association.

Mode Privileged Exec

Examples To show current IKE security associations at a peer, enter the command below:

```
awplus# show isakmp sa
```

Output Figure 61-15: Example output from the **show isakmp sa** command

```
awplus#show isakmp sa
-------------------------------------------------------------------------------
Peer                Cookies (initiator:responder)       Auth  Ver   Expires
                    Encryption    Integrity    Group    DPD   NATT  State
-------------------------------------------------------------------------------
10.0.0.20           f93c2717a1ece407:972bc0c77344d7a4   PSK   1     78340s
                    AES256        SHA256       2        yes   no    Established
10.0.0.22           ccb7f90b54945375:2642525bd20f3428   PSK   1     3334s
                    3DES          SHA1         2        yes   no    Established
10.0.0.25           bd0efef134c86656:d46d0b1b72b46444   PSK   1     819s
                    AES128        SHA1         2        yes   no    Established
```

transform (IPsec Profile)

Overview Use this command to create an IPsec profile transform, which specifies the encryption and authentication algorithms used to protect data.

Use the **no** variant to delete a previously created transform.

Syntax

```
transform <1-255> protocol esp integrity {sha1|sha256|sha512}
encryption {3des|aes128|aes192|aes256|null}
```

```
no transform <1-255>
```

Parameter	Description
<1-255>	Transform priority (1 is the highest)
sha1	Secure Hash Standard with 160-bit digest size
sha256	Secure Hash Standard with 256-bit digest size
sha512	Secure Hash Standard with 512 bit digest size
3des	Triple DES symmetric key block cipher with a 168-bit key
aes128	Advanced Encryption Standard symmetric key block cipher with a 128-bit key
aes192	Advanced Encryption Standard symmetric key block cipher with a 192-bit key
aes256	Advanced Encryption Standard symmetric key block cipher with a 256-bit key
null	No encryption. This option is not intended for use in a live network. It should only be used for testing purposes.

Default By default, an IPsec profile has no transforms and so will not be active.

Mode IPsec Profile Configuration

Examples To configure an IPsec profile transform, use the following commands:

```
awplus(config)# crypto ipsec profile my_profile
```

```
awplus(config-ipsec-profile)# transform 2 protocol esp
integrity sha1 encryption 3des
```

To delete a created transform, use the following command:

```
awplus(config-ipsec-profile)# no transform 2
```

Related Commands crypto ipsec profile

Validation Commands show ipsec profile

transform (ISAKMP Profile)

Overview Use this command to create an ISAKMP profile transform which specifies the encryption and authentication algorithms used to protect data in the tunnel.

Use the **no** variant to delete a previously created transform.

Syntax

```
transform <1-255> integrity {sha1|sha256|sha512} encryption
{3des|aes128|aes192|aes256} group {2|5|14|15|16|18}
```

```
no transform <1-255>
```

Parameter	Description
<1-255>	Transform priority (1 is the highest)
sha1	Secure Hash Standard with 160-bit digest size
sha256	Secure Hash Standard with 256-bit digest size
sha512	Secure Hash Standard with 512 bit digest size
3des	Triple DES symmetric key block cipher with a 168-bit key
aes128	Advanced Encryption Standard symmetric key block cipher with a 128-bit key
aes192	Advanced Encryption Standard symmetric key block cipher with a 192-bit key
aes256	Advanced Encryption Standard symmetric key block cipher with a 256-bit key
group	Diffie-Hellman group
2	1024-bit MODP Group
5	1536-bit MODP Group
14	2048-bit MODP Group
15	3072-bit MODP Group
16	4096-bit MODP Group
18	8192-bit MODP Group

Default By default, an ISASMP profile has no transforms and so will not be active.

Mode ISAKMP Profile Configuration

Examples To create an ISAKMP profile transform, use the following commands:

```
awplus(config)# crypto isakmp profile my_profile
```

```
awplus(config-isakmp-profile)# transform 2 integrity sha1
encryption 3des group 5
```

To delete a created transform, use the following command:

```
awplus(config-isakmp-profile)# no transform 2
```

Related Commands crypto isakmp profile

tunnel destination (IPsec)

Overview Use this command to specify a destination IPv4 or IPv6 address or destination network name for the remote end of the tunnel.

Use the **no** variant of this command to remove a configured tunnel destination address.

Syntax

```
tunnel destination {<WORD>|<ipv4-address>|<ipv6-address>}
no tunnel destination {<WORD>|<ipv4-address>|<ipv6-address>}
```

Parameter	Description
<WORD>	Destination network name or "dynamic". The "dynamic" parameter allows you to specify a dynamic IP address for the remote endpoint. The dynamic IP address can be obtained, for example, via DHCP.
<ipv4-address>	Destination IPv4 address. The IPv4 address uses the format A.B.C.D.
<ipv6-address>	Destination IPv6 address. The IPv4 address uses the format X:X::X:X.

Mode Interface Configuration

Examples To configure a destination IPv4 address for IPsec `tunnel145`, use the commands below:

```
awplus# configure terminal
awplus(config)# interface tunnel145
awplus(config-if)# tunnel mode ipsec ipv4
awplus(config-if# tunnel destination 192.0.3.1
```

To configure a destination IPv6 address for IPsec `tunnel145`, use the commands below:

```
awplus# configure terminal
awplus(config)# interface tunnel145
awplus(config-if)# tunnel mode ipsec ipv6
awplus(config-if# tunnel destination 2001:0db8::
```

To configure a destination network name for IPsec `tunnel145`, use the commands below:

```
awplus# configure terminal
awplus(config)# interface tunnel145
awplus(config-if)# tunnel mode ipsec ipv4
awplus(config-if# tunnel destination www.z.com
```

To configure a dynamic IP address for the tunnel destination, use the commands below:

```
awplus# configure terminal
awplus(config)# interface tunnel145
awplus(config-if)# tunnel mode ipsec ipv4
awplus(config-if# tunnel destination dynamic
```

To remove the destination address of IPSec `tunnel145`, use the commands below:

```
awplus# configure terminal
awplus(config)# interface tunnel145
awplus(config-if)# no tunnel destination 192.0.3.1
```

Related Commands tunnel source (IPsec)

tunnel local name (IPsec)

Overview Use this command to specify an IPSec tunnel hostname to send to the peer for authentication when you apply tunnel protection ipsec (IPsec) to encrypt the packets and configure an ISAKMP key.

Use the **no** variant of this command to remove a previously configured IPSec tunnel hostname.

Syntax

```
tunnel local name <local-name>
no tunnel local name
```

Parameter	Description
<local-name>	Source tunnel hostname.

Default The default tunnel local name is the IP address of tunnel source.

Mode Interface Configuration

Examples To configure the tunnel local name office1 for `tunnel6`, use the commands below:

```
awplus# configure terminal
awplus(config)# interface tunnel6
awplus(config-if)# tunnel local name office1
```

To remove a configured tunnel local name for `tunnel6`, use the commands below:

```
awplus# configure terminal
awplus(config)# interface tunnel6
awplus(config-if)# no tunnel local name
```

Related Commands tunnel remote name (IPsec)

tunnel local selector

Overview Use this command to specify a local subnet for a traffic selector pair.

Use the **no** variant of this command to unset the local subnet for the traffic selector pair so that it matches all sources, i.e. 0.0.0.0/0 or ::/0 for IPv4 and IPv6, respectively. When local and remote subnets for a traffic selector pair are both unset, the traffic selector pair is removed.

Syntax

```
tunnel local selector [<traffic-selector-ID>]
{<ipv4-subnet>|<ipv6-subnet>}
```

```
no tunnel local selector [<traffic-selector-ID>]
```

Parameter	Description
<traffic-selector-ID>	Optional traffic selector ID from 1 through 65535. The default is 1.
<ipv4-subnet>	IPv4 subnet in the format A.B.C.D/M.
<ipv6-subnet>	IPv6 subnet in the format of X:X::X:X/M

Default When no traffic selector pairs are configured there is an implicit traffic selector pair, where the local and remote subnets are 0.0.0.0/0 or ::/0 depending on the tunnel IPsec mode.

Mode Interface configuration

Usage A traffic selector pair is an agreement between IKE peers to permit traffic through a tunnel if the traffic matches a specified pair of local and remote subnets. When the local selector is specified but the remote selector is not, the selector pair implicitly matches all destinations.

Examples To specify an IPv4 destination address as the traffic selector for the traffic to match for `tunnel0`, use the commands below:

```
awplus# configure terminal
awplus(config)# interface tunnel0
awplus(config-if)# tunnel source eth1
awplus(config-if)# tunnel destination 10.0.0.2
awplus(config-if)# tunnel local name office
awplus(config-if)# tunnel mode ipsec ipv4
awplus(config-if)# tunnel local selector 192.168.1.0/24
awplus(config-if)# tunnel remote selector 192.168.2.0/24
```

To configure an additional source and destination traffic selector pair for the traffic to match for tunnel0, use the commands:

```
awplus(config-if)# tunnel local selector 5 192.168.1.0/24
awplus(config-if)# tunnel remote selector 5 192.168.2.0/24
```

To specify an IPv6 source address as the traffic selector for the traffic to match for `tunnel0`, use the commands below:

```
awplus# configure terminal
awplus(config)# interface tunnel0
awplus(config-if)# tunnel source eth1
awplus(config-if)# tunnel destination 2001:db8:10::1
awplus(config-if)# tunnel local name office
awplus(config-if)# tunnel mode ipsec ipv6
awplus(config-if)# tunnel local selector 2001:db8:1::/64
awplus(config-if)# tunnel remote selector 2001:db8:2::/64
```

To configure an additional source and destination traffic selector pair for the traffic to match for tunnel0, use the commands:

```
awplus(config-if)# tunnel local selector 5 2001:db8:1::/64
awplus(config-if)# tunnel remote selector 5 2001:db8:2::/64
```

To unset the destination traffic selector for the traffic selector pair with ID 1, for tunnel 6, use the commands:

```
awplus# configure terminal
awplus(config)# interface tunnel6
awplus(config-if)# no tunnel remote selector
```

or

```
awplus(config-if)# no tunnel remote selector 1
```

Related Commands

tunnel remote selector

show interface tunnel (IPsec)

tunnel mode (IPsec)

Overview Use this command to configure the encapsulation tunneling mode to use.

Use the **no** variant of this command to remove an established tunnel.

Syntax

```
tunnel mode {gre [ipv6]|ipsec {ipv4|ipv6}|l2tp v3
[ipv6]|openvpn {tap|tun}}
```

```
no tunnel mode
```

Parameter	Description
`gre`	GRE IPv4 or IPv6 as the payload over IPv4 tunneling. IPv4 is the delivery protocol.
`gre ipv6`	GRE IPv4 or IPv6 as the payload over IPv6 tunneling. IPv6 is the delivery protocol.
`ipsec ipv4`	IPv4 IPsec tunnel
`ipsec ipv6`	IPv6 IPsec tunnel
`l2tp v3`	Layer 2 Tunneling Protocol version 3. By default, IPv4 is the deliver protocol.
`l2tp v3 ipv6`	Set IPv6 as the deliver protocol for L2TPv3
`openvpn`	OpenVPN tunneling mode
`openvpn tap`	OpenVPN TAP mode
`openvpn tun`	OpenVPN TUN mode

Default Virtual tunnel interfaces have no mode set.

Mode Interface Configuration

Usage A tunnel will not become operational until it is configured with this command.

Examples To configure IPSec in IPv4 tunnel mode, use the commands:

```
awplus# configure terminal
awplus(config)# interface tunnel6
awplus(config-if)# tunnel mode ipsec ipv4
```

To remove configured IPSec tunnels for `tunnel6`, use the commands:

```
awplus# configure terminal
awplus(config)# interface tunnel6
awplus(config-if)# no tunnel mode
```

tunnel protection ipsec (IPsec)

Overview Use this command to enable IPsec protection for packets encapsulated by this tunnel.

Use the **no** variant to disable IPsec protection.

Syntax

```
tunnel protection ipsec [profile <profile_name>]
no tunnel protection ipsec
```

Default IPsec protection for packets encapsulated by tunnel is disabled. If no custom profile is specified, the default profile is used.

Parameter	Description
<profile_name>	Custom profile name. You can use the crypto ipsec profile command to create custom profiles.

Mode Interface Configuration

Usage IPsec mode tunnels (IPv4 and IPv6) require this command for them to work. GRE IPv6 and L2TPv3 IPv6 tunnel have IPsec protection as an option.

Examples To enable IPsec protection by using default profile, use the following commands:

```
awplus# configure terminal
awplus(config)# interface tunnel14
awplus(config-if)# tunnel protection ipsec
```

To enable IPsec protection by using a custom profile, use the following commands:

```
awplus(config)# interface tunnel14
awplus(config-if)# tunnel protection ipsec profile
my_profile
```

To disable IPsec protection for packets encapsulated by `tunnel14`, use the following commands:

```
awplus# configure terminal
awplus(config)# interface tunnel14
awplus(config-if)# no tunnel protection ipsec
```

Related Commands crypto ipsec profile

tunnel remote name (IPsec)

Overview Use this command to specify a tunnel remote name to authenticate the tunnel's remote peer device when you apply tunnel protection ipsec (IPsec) to encrypt the packets and configure an ISAKMP key.

Use the **no** variant of this command to remove a previously configured tunnel remote name.

Syntax

```
tunnel remote name <remote-name>
no tunnel local name
```

Parameter	Description
<remote-name>	Destination tunnel hostname

Default The default tunnel remote name is the IP address of tunnel destination.

Mode Interface Configuration

Examples To configure tunnel remote name `office2` for `tunnel6`, use the commands below:

```
awplus# configure terminal
awplus(config)# interface tunnel6
awplus(config-if)# tunnel remote name office2
```

To remove a configured tunnel local name for `tunnel6`, use the commands below:

```
awplus# configure terminal
awplus(config)# interface tunnel6
awplus(config-if)# no tunnel remote name
```

Related Commands tunnel local name (IPsec)

tunnel remote selector

Overview Use this command to specify a destination subnet for a traffic selector pair.

Use the **no** variant of this command to unset the remote subnet for a traffic selector pair so that it matches all destinations, i.e. 0.0.0.0/0 or ::/0 for IPv4 and IPv6, respectively. When local and remote subnets for a traffic selector pair are both unset, the traffic selector pair is removed.

Syntax

```
tunnel remote selector [<traffic-selector-ID>]
{<IPv4-subnet>|<IPv6-subnet>}
```

```
no tunnel remote selector [<traffic-selector-ID>]
```

Parameter	Description
<traffic-selector-ID>	Traffic selector ID from 1 through 65535. If not specified the default value 1 is used.
<ipv4-subnet>	IPv4 subnet in the format A.B.C.D/M.
<ipv6-subnet>	IPv6 subnet in the format of X:X::X:X/M

Default When no traffic selector pairs are configured there is an implicit traffic selector pair, where the local and remote subnets are 0.0.0.0/0 or ::/0 depending on the tunnel IPsec mode.

Mode Interface configuration

Usage A traffic selector pair is an agreement between IKE peers to permit trafic through a tunnel if the traffic matches a specified pair of local and remote subnets. When the remote selector is specified but the local selector is not, the selector pair implicitly matches all sources.

Examples To specify an IPv4 destination address as the traffic selector for the traffic to match for `tunnel0`, use the commands below:

```
awplus# configure terminal
awplus(config)# interface tunnel0
awplus(config-if)# tunnel source eth1
awplus(config-if)# tunnel destination 10.0.0.2
awplus(config-if)# tunnel local name office
awplus(config-if)# tunnel mode ipsec ipv4
awplus(config-if)# tunnel local selector 192.168.1.0/24
awplus(config-if)# tunnel remote selector 192.168.2.0/24
```

When no traffic selector ID is specified the default ID value is used. By specifying a traffic selector ID, additional selector pairs can be configured.

To configure an additional source and destination traffic selector pair for the traffic to match for tunnel0, use the commands:

```
awplus(config-if)# tunnel local selector 5 192.168.1.0/24
awplus(config-if)# tunnel remote selector 5 192.168.2.0/24
```

To specify an IPv6 source address as the traffic selector for the traffic to match for `tunnel0`, use the commands below:

```
awplus# configure terminal
awplus(config)# interface tunnel0
awplus(config-if)# tunnel source eth1
awplus(config-if)# tunnel destination 2001:db8:10::1
awplus(config-if)# tunnel local name office
awplus(config-if)# tunnel mode ipsec ipv6
awplus(config-if)# tunnel local selector 2001:db8:1::/64
awplus(config-if)# tunnel remote selector 2001:db8:2::/64
```

To configure an additional source and destination traffic selector pair for the traffic to match for tunnel0, use the commands:

```
awplus(config-if)# tunnel local selector 5 2001:db8:1::/64
awplus(config-if)# tunnel remote selector 5 2001:db8:2::/64
```

To unset the destination traffic selector for the traffic selector pair with ID 1, for tunnel6, use the commands:

```
awplus# configure terminal
awplus(config)# interface tunnel6
awplus(config-if)# no tunnel remote selector
```

or

```
awplus(config-if)# no tunnel remote selector 5
```

Related Commands

tunnel local selector

show interface tunnel (IPsec)

tunnel source (IPsec)

Overview Use this command to specify an IPv4 or IPv6 source address or interface name for packets being encapsulated in the IPsec tunnel. The source address should be an existing IPv4 address or IPv6 address or interface name configured for an interface.

Note that if the tunnel source interface has multiple IP addresses, for example, one primary and one or more secondary IP addresses, the lowest IP address on the interface is used for transporting the tunnel encapsulated traffic.

Use the **no** variant of this command to remove a tunnel source address for a tunnel interface.

Syntax

```
tunnel source {<interface-name>|<ipv4-address>|<ipv6-address>}
no tunnel source
{<interface-name>|<ipv4-address>|<ipv6-address>}
```

Parameter	Description
<interface>	Interface name.
<ipv4-address>	The IPv4 address uses the format A.B.C.D.
<ipv6-address>	The IPv6 address uses the format X:X::X:X.

Mode Interface Configuration

Examples To configure a source IPv4 address for IPsec `tunnel145`, use the commands below:

```
awplus# configure terminal
awplus(config)# interface tunnel145
awplus(config-if)# tunnel mode ipsec ipv4
awplus(config-if)# tunnel source 192.168.1.1
```

To configure a source IPv6 address for IPsec `tunnel145`, use the commands below:

```
awplus# configure terminal
awplus(config)# interface tunnel145
awplus(config-if)# tunnel mode ipsec ipv6
awplus(config-if)# tunnel source 2001:db8::
```

To configure a source interface for IPsec `tunnel145`, use the commands below:

```
awplus# configure terminal
awplus(config)# interface tunnel145
awplus(config-if)# tunnel mode ipsec ipv4
awplus(config-if)# tunnel source eth1
```

To remove the source address of IPsec `tunnel145`, use the commands below:

```
awplus# configure terminal
awplus(config)# interface tunnel145
awplus(config-if)# no tunnel source 192.168.1.1
```

Related Commands tunnel destination (IPsec)

undebug isakmp

Overview Use this command to disable debugging ISAKMP.

To enable debugging ISAKMP, see debug isakmp.

Syntax

```
undebug [crypto] isakmp [info|trace|all]
```

Parameter	Description
`undebug`	Disable debugging function.
`crypto`	Security specific command.
`isakmp`	Internet Security Association Key Management Protocol provides a common framework for key management implementations.
`info`	Informational debug messages such as protocol events.
`trace`	Verbose debug messages including protocol events and message traces.
`all`	All debug enabled.

Mode Privileged Exec

Related Commands

debug isakmp

no debug isakmp

version (ISAKMP)

Overview Use this command to set the ISAKMP protocol version.

Use the **no** variant to set the protocol version to default (IKEv2).

Syntax

```
version {1 mode {aggressive|main}|2}
no version
```

Parameter	Description
`1`	IKEv1
`main`	IKEv1 Main mode. An IKE session begins with the initiator and recipient sending three two-way exchanges to define what encryption and authentication protocols are acceptable, how long keys should remain active, and whether perfect forward secrecy should be enforced. Main mode uses more packets for the process than Aggressive mode, but Main mode is considered more secure.
`aggressive`	IKEv1 Aggressive mode. The initiator and recipient accomplish the same objectives, but in only two exchanges.
`2`	IKEv2

Default If you do not specify the version, the default version is IKEv2

Mode IPsec ISAKMP Configuration

Examples To set the ISAKMP protocol version of profile "my_profile" to IKEv1 main mode, use the following commands:

```
awplus(config)# configure isakmp profile my_profile
awplus(config-isakmp-profile)# version 1 mode main
```

To set the version to its default, use the following command:

```
awplus# no version
```

Related Commands crypto isakmp profile

Validation Commands show isakmp profile

62 GRE Tunneling Commands

Introduction

Overview This chapter provides an alphabetical reference of commands used to configure IPv6 tunnels. For more information about IPv6 tunnels, see the Generic Routing Encapsulation (GRE) Feature Overview and_Configuration Guide.

Command List

- "crypto isakmp key" on page 2742
- "interface tunnel" on page 2744
- "ip address (GRE)" on page 2745
- "ip tcp adjust-mss" on page 2747
- "ipv6 address (GRE)" on page 2749
- "ipv6 tcp adjust-mss" on page 2751
- "show interface tunnel (GRE)" on page 2753
- "show isakmp key (GRE)" on page 2754
- "tunnel checksum" on page 2755
- "tunnel dscp" on page 2756
- "tunnel destination (GRE)" on page 2757
- "tunnel local name (GRE)" on page 2759
- "tunnel mode (GRE)" on page 2760
- "tunnel protection ipsec (GRE)" on page 2761
- "tunnel remote name (GRE)" on page 2762
- "tunnel source (GRE)" on page 2763
- "tunnel ttl" on page 2765

crypto isakmp key

Overview Use this command to configure a pre-shared authentication key.

Pre-shared key authentication uses optionally encrypted shared keys identified by hostname, IPv4 or IPv6 address. Pre-shared keys are not viewable and stored encrypted in the running-configuration.

You must configure this key whenever you specify pre-shared keys in an (Internet Key Exchange) IKE policy and at both peers.

To use the **no** variant to remove a previously created pre-shared key.

Syntax

```
crypto isakmp key [8] <key> {hostname <host-name>|address
{<ipv4-addr>|<ipv6-addr>}}
```

```
no crypto isakmp key [8] <key> {hostname <host-name>|address
{<ipv4-addr>|<ipv6-addr>}
```

Parameter	Description
`crypto`	Security specific command.
`isakmp`	Internet Security Association Key Management Protocol provides a common framework for key management implementations.
`key`	Pre-shared key.
<key>	Specify the pre-shared key. Us any combination of alphanumeric characters up to 128 bytes.
`8`	Specifies that an encrypted key follows.
<host-name>	Destination hostname.
<ipv4-addr>	Destination IPv4 address. The IPv4 address uses the format A.B.C.D.
<ipv6-addr>	Destination IPv6 address. The IPv4 address uses the format X:X::X:X.

Default ISAKMP keys do not exist.

Mode Global Configuration

Examples To configure a pre-shared authentication key for a destination host, use the commands below:

```
awplus# configure terminal
```

```
awplus(config)# crypto isakmp key friend hostname
mypeer@my.domain.com
```

To configure a pre-shared authentication key at a peer with IPv4 address, use the commands below:

```
awplus# configure terminal

awplus(config)# crypto isakmp key friend address
192.168.1.1
```

To configure a pre-shared encrypted authentication key at a peer with IPv4 address, use the commands below:

```
awplus# configure terminal

awplus(config)# crypto isakmp key 8 Nhe6ioQmzbysQaJr6Du+cA==
address
192.168.1.2
```

To remove a pre-shared key at a peer, use the commands below:

```
awplus# configure terminal

awplus(config)# no crypto isakmp key friend hostname
mypeer@my.domain.com
```

interface tunnel

Overview Use this command to create a tunnel interface. Tunnel interfaces are identified by an index identifier that is an integer in the range from 0 through 255. Note that the **tunnel mode** command is needed to enable the tunnel.

Use the **no** variant of this command to remove a previously created tunnel interface.

Syntax

```
interface tunnel<0-255>
no interface tunnel<tunnel-index>
```

Parameter	Description
<0-255>	Specify a tunnel interface index identifier in the range from 0 through 255.

Default Tunnel interfaces do not exist.

Mode Global Configuration

Usage This command creates a new tunnel interface to configure in Global Configuration mode.

This command is also used to enter Interface Configuration mode for existing tunnel interfaces.

Examples To configure a tunnel interface with index `30` and enable GRE, use the commands:

```
awplus# configure terminal
awplus(config)# interface tunnel30
awplus(config-if)# tunnel mode gre
```

To remove the GRE tunnel interface `tunnel30`, use the commands:

```
awplus# configure terminal
awplus(config)# no interface tunnel30
```

ip address (GRE)

Overview This command sets a static IP address on a tunnel interface. To set the primary IP address on the interface, specify only **ip address**<*ip-address/m*>. This overwrites any configured primary IP address. To add additional IP addresses on this interface, use the **secondary** parameter. You must configure a primary address on the interface before configuring a secondary address. The secondary address should not be the same as the primary address.

NOTE: *Use **show running-config interface** not **show ip interface brief** when you need to view a secondary address configured on an interface. **show ip interface brief** will only show the primary address not a secondary address for an interface.*

The **no** variant of this command removes the IP address from the tunnel interface. You cannot remove the primary address when a secondary address is present.

Syntax

```
ip address <ip-addr/prefix-length> [secondary] [label <label>]
no ip address <ip-addr/prefix-length> [secondary]
no ip address
```

Parameter	Description
<ip-addr/prefix-length>	The IPv4 address and prefix length you are assigning to the tunnel interface.
<label>	A user-defined description of the secondary IP address. Valid characters are any printable character and spaces.

Mode Interface Configuration

Examples To add the primary IP address `172.16.1.1/24` to the tunnel interface `tunnel20`, use the commands:

```
awplus# configure terminal
awplus(config)# interface tunnel20
awplus(config-if)# ip address 172.16.1.1/24
```

To add the secondary IP address `172.16.2.1/24` to the same tunnel interface, use the commands:

```
awplus# configure terminal
awplus(config)# interface tunnel20
awplus(config-if)# ip address 172.168.2.1/24 secondary
```

To remove the secondary IP address `172.16.2.1/24`, use the commands:

```
awplus# configure terminal
awplus(config)# interface tunnel20
awplus(config-if)# no ip address 172.168.2.1/24 secondary
```

Related Commands

interface tunnel

show ip interface

show running-config interface

ip tcp adjust-mss

Overview Use this command to set the Maximum Segment Size (MSS) size for an interface, where MSS is the maximum TCP data packet size that the interface can transmit before fragmentation.

Use the **no** variant of this command to remove a previously specified MSS size for a PPP interface, and restore the default MSS size.

Syntax

```
ip tcp adjust-mss {<mss-size>|pmtu}
no ip tcp adjust-mss
```

Parameter	Description
<mss-size>	<64-1460> Specifies the MSS size in bytes.
pmtu	Adjust TCP MSS automatically with respect to the MTU on the interface.

Default The default setting allows a TCP server or a TCP client to set the MSS value for itself.

Mode Interface Configuration

Usage When a host initiates a TCP session with a server it negotiates the IP segment size by using the MSS option field in the TCP packet. The value of the MSS option field is determined by the Maximum Transmission Unit (MTU) configuration on the host.

You can set a feasible MSS value on the following interfaces:

- PPPoE
- Ethernet
- VTI Tunnels (IPSeC, GRE, IPv6, L2TP, OpenVPN)
- VLAN

Examples To configure an MSS size of 1452 bytes on PPP interface ppp0, use the commands:

```
awplus# configure terminal
awplus(config)# interface ppp0
awplus(config-if)# ip tcp adjust-mss 1452
```

To configure an MSS size of 1452 bytes on Ethernet interface eth1, use the commands:

```
awplus# configure terminal
awplus(config)# interface eth1
awplus(config-if)# ip tcp adjust-mss 1452
```

To restore the MSS size to the default size on PPP interface `ppp0`, use the commands:

```
awplus# configure terminal
awplus(config)# interface ppp0
awplus(config-if)# no ip tcp adjust-mss
```

Related Commands

mtu (PPP)

show interface

show interface (PPP)

show interface tunnel (GRE)

ipv6 address (GRE)

Overview Use this command to set an IPv6 address on a tunnel interface and enable IPv6. Use the optional **eui64** parameter to derive the interface identifier of the IPv6 address from the MAC address of the first Ethernet port.

Use the **no** variant of this command to remove the IPv6 address assigned and disable IPv6. Note that if no global addresses are left after removing the IPv6 address then IPv6 is disabled.

Syntax

```
ipv6 address <ipv6-addr/prefix-length> [eui64]
no ipv6 address <ipv6-addr/prefix-length> [eui64]
```

Parameter	Description
<ipv6-addr/prefix-length>	Specifies an IPv6 address. The IPv6 address uses the format X:X::X:X/prefix-length.
`eui64`	Specifies the lower 64 bits of the IPv6 address from the eui64 interface identifier (EUI - Extended Unique Identifier). EUI-64 identifiers are used as the least significant 64 bits of a unicast network address or a link-local address using stateless autoconfiguration.

Mode Interface Configuration

Usage If the **eui64** parameter is specified then the lower 64 bits of the IPv6 address are replaced with the same address that would be acquired through stateless address autoconfiguration (SLAAC) if the device received an RA (Router Advertisement) specifying this prefix. See ipv6 address autoconfig for a detailed command description and examples to enable and disable SLAAC.

Note that link-local addresses are retained in the system until they are negated by using the no variant of the command that established them. See the ipv6 enable command for more information.

Also note that the link-local address is retained in the system if the global address is removed using another command, which was not used to establish the link-local address. For example, if a link local address is established with the ipv6 enable command then it will not be removed using a **no ipv6 address** command.

Example To assign the IPv6 address 2001:0db8::a2/64 to the tunnel interface`tunnel2`, use the commands:

```
awplus# configure terminal
awplus(config)# interface tunnel2
awplus(config-if)# ipv6 address 2001:0db8::a2/64
```

To remove the IPv6 address 2001:0db8::a2/64 from the tunnel interface `tunnel2`, use the commands:

```
awplus# configure terminal
awplus(config)# interface tunnel2
awplus(config-if)# no ipv6 address 2001:0db8::a2/64
```

To assign the **eui64** derived address in the prefix `2001:db8::/48` to tunnel interface `tunnel2`, use the commands:

```
awplus# configure terminal
awplus(config)# interface tunnel2
awplus(config-if)# ipv6 address 2001:0db8::/48 eui64
```

To remove the **eui64** derived address in the prefix `2001:db8::/48` from tunnel interface `tunnel2`, use the commands:

```
awplus# configure terminal
awplus(config)# interface tunnel2
awplus(config-if)# no ipv6 address 2001:0db8::/48 eui64
```

Validation commands

show running-config

show ipv6 interface brief

Related commands

ipv6 address autoconfig

ipv6 tcp adjust-mss

Overview Use this command to set the IPv6 Maximum Segment Size (MSS) size for an interface, where MSS is the maximum TCP data packet size that the interface can transmit before fragmentation.

Use the **no** variant of this command to remove a previously specified MSS size for a PPP interface, and restore the default MSS size.

Syntax

```
ip tcp adjust-mss {<mss-size>|pmtu}
no ip tcp adjust-mss
```

Parameter	Description
<mss-size>	<64-1460> Specifies the MSS size in bytes.
pmtu	Adjust TCP MSS automatically with respect to the MTU on the interface.

Default The default setting allows a TCP server or a TCP client to set the MSS value for itself.

Mode Interface Configuration

Usage When a host initiates a TCP session with a server it negotiates the IP segment size by using the MSS option field in the TCP packet. The value of the MSS option field is determined by the Maximum Transmission Unit (MTU) configuration on the host.

You can set a feasible MSS value on the following interfaces:

- PPPoE
- Ethernet
- VTI Tunnels (IPSec, GRE, IPv6, L2TP, OpenVPN)
- VLAN

Examples To configure an IPv6 MSS size of 1452 bytes on PPP interface ppp0, use the commands:

```
awplus# configure terminal
awplus(config)# interface ppp0
awplus(config-if)# ipv6 tcp adjust-mss 1452
```

To configure an IPv6 MSS size of 1452 bytes on Ethernet interface eth1, use the commands:

```
awplus# configure terminal
awplus(config)# interface eth1
awplus(config-if)# ip tcp adjust-mss 1452
```

To restore the MSS size to the default size on PPP interface `ppp0`, use the commands:

```
awplus# configure terminal
awplus(config)# interface ppp0
awplus(config-if)# no ip tcp adjust-mss
```

Related Commands

mtu (PPP)

show interface

show interface (PPP)

show interface tunnel (GRE)

show interface tunnel (GRE)

Overview Use this command to display status information of tunnels.

The tunnel remains inactive if no valid tunnel source or tunnel destination is configured.

Syntax `show interface tunnel<tunnel-index>`

Parameter	Description
`tunnel`	Specify this parameter to display tunnel status information of a given tunnel identified by the <0-255> parameter.
<0-255>	Specify a tunnel index in the range from 0 through 255.

Mode Privileged Exec

Example To display status information for GRE tunnel `tunnel20`, use the command:

```
awplus# show interface tunnel20
```

Figure 62-1: Example output from the **show interface tunnel** command

```
awplus#show interface tunnel20
Interface tunnel20
  Link is UP, administrative state is UP
  Hardware is Tunnel
  IPv4 address 172.16.1.1/24 pointopoint 172.16.1.255
  index 4750 metric 1 mtu 1480
  arp ageing timeout 300
  <UP,POINTOPOINT,RUNNING,MULTICAST>
  SNMP link-status traps: Disabled
  Tunnel source 192.168.1.1, destination 192.168.2.1
  Tunnel local 192.168.1.1, remote 192.168.2.1
  Tunnel protocol/transport gre, key disabled, sequencing disabled
  Tunnel TTL inherit
  Checksumming of packets disabled, path MTU discovery disabled
    input packets 0, bytes 0, dropped 0, multicast packets 0
    output packets 0, bytes 0, multicast packets 0 broadcast
packets 0
  Time since last state change: 0 days 00:05:25
```

show isakmp key (GRE)

Overview Use this command to show the ISAKMP pre-shared key. Pre-shared key authentication using optionally encrypted shared keys identified by hostname, IPv4 or IPv6 address. Pre-shared keys are not viewable and stored encrypted in the running-configuration.

Syntax

```
show [crypto] isakmp key
```

Parameter	Description
`crypto`	Security specific command.
`isakmp`	Internet Security Association Key Management Protocol provides a common framework for key management implementations.
`key`	Pre-shared key.

Mode Privileged Exec

Examples To show ISAKMP pre-shared key, enter the command below:

```
awplus# show isakmp key
```

Output Figure 62-2: Example output from the **show isakmp key** command

```
awplus#show isakmp key
Hostname/IP address             Key
10.2.0.10                       mytunnelkey
```

tunnel checksum

Overview Use this command to enable GRE tunnel checksum insertion and checking. This results in the first two bytes after the protocol field in the IPv4 header containing the checksum. The tunnel checksum is used to detect packet corruption.

Use the **no** variant of this command to disable checksum insertion and checking.

Syntax tunnel checksum

no tunnel checksum

Default Checksum insertion and checking is disabled.

Mode Interface Configuration

Examples To enable checksum insertion and checking, use the commands:

```
awplus# configure terminal
awplus(config)# interface tunnel2
awplus(config-if)# tunnel mode gre
awplus(config-if)# tunnel checksum
```

To disable checksum insertion and checking, use the commands:

```
awplus# configure terminal
awplus(config)# interface tunnel2
awplus(config-if)# no tunnel checksum
```

tunnel dscp

Overview Use this command to configure the Differentiated Services Code Point (DSCP) value for the DSCP field in the packet header that encapsulates the tunneled packets.

Use the **no** variant of this command to reset the DSCP field to its default value.

Syntax

```
tunnel dscp <0-63>
no tunnel dscp
```

Parameter	Description
<0-63>	Specify the DSCP value in the range from 0 through 63 for the DSCP field in the packet header that encapsulates the tunneled packets.

Default The IPv4 DSCP field value is inherited from the inner header to the outer header.

Mode Interface Configuration

Examples To configure the DSCP value to `10` for `tunnel2`, use the commands:

```
awplus# configure terminal
awplus(config)# interface tunnel2
awplus(config-if)# tunnel mode gre
awplus(config-if)# tunnel dscp 10
```

To remove a configured DSCP value for `tunnel2`, use the commands:

```
awplus# configure terminal
awplus(config)# interface tunnel2
awplus(config-if)# no tunnel dscp
```

Related commands interface tunnel

tunnel mode (GRE)

tunnel destination (GRE)

Overview Use this command to specify a tunnel destination for the remote end of the tunnel. Tunnel destination can be specified by using a destination network name or an IPv4 address.

Use the **no** variant of this command to remove a configured tunnel destination.

Syntax

```
tunnel source {<ipv4-addr>|<destination-network-name>}
no tunnel destination
```

Parameter	Description
<ipv4-addr>	Specify the tunnel destination IPv4 address in the dotted decimal format A.B.C.D. The endpoints of the tunnel must be configured by mirroring IP addresses, that is, the tunnel source on one endpoint must be specified as the tunnel destination on the other endpoint.
<destination-network-name>	Destination network name. If the destination network name cannot be resolved, then the GRE tunnel remains inactive.

Mode Interface Configuration

Examples To configure an IPv4 tunnel destination by using an IPv4 address, use the commands:

```
awplus# configure terminal
awplus(config)# interface tunnel40
awplus(config-if)# tunnel mode gre
awplus(config-if)# tunnel destination 2.2.2.2
```

To configure a GRE tunnel destination by using a destination network name, use the commands:

```
awplus# configure terminal
awplus(config)# interface tunnel40
awplus(config-if)# tunnel mode gre
awplus(config-if)# tunnel destination
corporate_lan.example.com
```

To remove a GRE tunnel destination, use the commands:

```
awplus# configure terminal
awplus(config)# interface tunnel40
awplus(config-if)# no tunnel destination
```

Related commands

interface tunnel

tunnel mode (GRE)

tunnel source (GRE)

tunnel local name (GRE)

Overview Use this command to specify an IPSec tunnel hostname to send to the peer for authentication when you apply tunnel protection ipsec (GRE) to encrypt the packets and configure an ISAKMP key.

Use the **no** variant of this command to remove a previously configured IPSec tunnel hostname.

Syntax

```
tunnel local name <local-name>
no tunnel local name
```

Parameter	Description
<local-name>	Source tunnel hostname.

Default The default tunnel local name is the IP address of tunnel source.

Mode Interface Configuration

Examples To configure the tunnel local name office1 for tunnel6, use the commands below:

```
awplus# configure terminal
awplus(config)# interface tunnel6
awplus(config-if)# tunnel local name office1
```

To remove a configured tunnel local name for tunnel6, use the commands below:

```
awplus# configure terminal
awplus(config)# interface tunnel6
awplus(config-if)# no tunnel local name
```

Related Commands tunnel remote name (GRE)

tunnel mode (GRE)

Overview Use this command to configure the encapsulation tunneling mode to use.

Use the **no** variant of this command to remove an established tunnel.

Syntax

```
tunnel mode {gre [ipv6]|ipsec {ipv4|ipv6}|l2tp v3
[ipv6]|openvpn {tap|tun}}
```

```
no tunnel mode
```

Parameter	Description
`gre`	GRE IPv4 or IPv6 as the payload over IPv4 tunneling. IPv4 is the delivery protocol.
gre ipv6	GRE IPv4 or IPv6 as the payload over IPv6 tunneling. IPv6 is the delivery protocol.
`ipsec ipv4`	IPv4 IPsec tunnel
`ipsec ipv6`	IPv6 IPsec tunnel
`l2tp v3`	Layer 2 Tunneling Protocol version 3. By default, IPv4 is the deliver protocol.
`l2tp v3 ipv6`	Set IPv6 as the deliver protocol for L2TPv3
`openvpn tap`	OpenVPN TAP mode
`openvpn tun`	OpenVPN TUN mode

Default Virtual tunnel interfaces have no mode set.

Mode Interface Configuration

Usage A tunnel will not become operational until it is configured with this command.

Examples To configure GRE as the encapsulation mode, use the commands:

```
awplus# configure terminal
awplus(config)# interface tunnel2
awplus(config-if)# tunnel mode gre
```

To remove a configured GRE tunnel for `tunnel2`, use the commands:

```
awplus# configure terminal
awplus(config)# interface tunnel2
awplus(config-if)# no tunnel mode
```

Related commands interface tunnel

tunnel protection ipsec (GRE)

Overview Use this command to optionally enable IPSec protection for packets encapsulated by this tunnel.

Use the **no** variant to disable IPSec protection.

Syntax

```
tunnel protection ipsec
no tunnel protection ipsec
```

Default IPSec protection for packets encapsulated by tunnel is disabled.

Mode Interface Configuration

Usage You also need to configure a pre-shared key in conjunction with this command. See the crypto isakmp key command for more information about configuring the pre-share key.

Examples To enable IPSec protection for packets encapsulated by `tunnel14`, use the commands below:

```
awplus# configure terminal
awplus(config)# interface tunnel14
awplus(config-if)# tunnel protection ipsec
```

To disable IPSec protection for packets encapsulated by `tunnel14`, use the commands below:

```
awplus# configure terminal
awplus(config)# interface tunnel14
awplus(config-if)# no tunnel protection ipsec
```

tunnel remote name (GRE)

Overview Use this command to specify a tunnel remote name to authenticate the tunnel's remote peer device when you apply tunnel protection ipsec (GRE) to encrypt the packets and configure an ISAKMP key.

Use the **no** variant of this command to remove a previously configured tunnel remote name.

Syntax

```
tunnel remote name <remote-name>
no tunnel local name
```

Parameter	Description
<remote-name>	Destination tunnel hostname

Default The default tunnel remote name is the IP address of tunnel destination.

Mode Interface Configuration

Examples To configure tunnel remote name `office2` for `tunnel6`, use the commands below:

```
awplus# configure terminal
awplus(config)# interface tunnel6
awplus(config-if)# tunnel remote name office2
```

To remove a configured tunnel local name for `tunnel6`, use the commands below:

```
awplus# configure terminal
awplus(config)# interface tunnel6
awplus(config-if)# no tunnel remote name
```

Related Commands tunnel local name (GRE)

tunnel source (GRE)

Overview Use this command to specify a tunnel source for the tunnel interface. Tunnel source can be specified by using an interface name or an IPv4 address. The source address must be an existing IPv4 address configured for an interface.

Use the **no** variant of this command to remove a tunnel source for a tunnel interface.

Syntax

```
tunnel source {<ipv4-addr>|<interface-name>}
no tunnel source
```

Parameter	Description
<ipv4-addr>	Specify the tunnel source IPv4 address for the GRE tunnel interface in the dotted decimal format A.B.C.D. The endpoints of the tunnel must be configured by mirroring IP addresses, that is, the tunnel source on one endpoint must be specified as the tunnel destination on the other endpoint.
<interface-name>	Available interface name. Any AlliedWare Plus interface type (eth, vlan, ppp, tunnel, lo and so on). Using interface name can minimize the number of user-configured IP addresses and allow the tunnel source IP address to be dynamically issued via, for example, DHCP.

Mode Interface Configuration

Examples To configure a GRE tunnel source IPv4 address, use the commands:

```
awplus# configure terminal
awplus# interface eth1
awplus(config-if)# ip address 1.1.1.1/24
awplus(config-if)# interface tunnel1
awplus(config-if)# tunnel mode gre
awplus(config-if)# tunnel source 1.1.1.1
```

To use an interface name as the tunnel source, use the commands:

```
awplus# configure terminal
awplus(config)# interface tunnel2
awplus(config-if)# tunnel mode gre
awplus(config-if)# tunnel source eth2
```

To remove a GRE tunnel source, use the commands:

```
awplus# configure terminal
awplus(config)# interface tunnel1
awplus(config-if)# no tunnel source
```

Related commands

interface tunnel

tunnel destination (GRE)

tunnel mode (GRE)

tunnel ttl

Overview Use this command to configure the value to use for the Time to Live (TTL) field in the IPv4 header that encapsulates the tunneled IPv4 or IPv6 packets.

Use the **no** variant of this command to set the TTL value to its default.

Syntax

```
tunnel ttl <1-255>
no tunnel ttl
```

Parameter	Description
<1-255>	TTL value from 1 through 255.

Default The default TTL value is inherited from the encapsulated packet.

Mode Interface Configuration

Example To set the TTL value of the packet to 255, use the commands:

```
awplus# configure terminal
awplus(config)# interface tunnel20
awplus(config-if)# tunnel ttl 255
```

To remove the configured TTL value of the packet, use the commands:

```
awplus# configure terminal
awplus(config)# interface tunnel20
awplus(config-if)# no tunnel ttl
```

Related commands interface tunnel

63 OpenVPN Commands

Introduction

This chapter provides an alphabetical reference of commands used to configure AlliedWare Plus OpenVPN.

For introductory information about AlliedWare Plus OpenVPN, including overview and configuration information, see the OpenVPN Feature Overview and Configuration_Guide.

The table below lists the OpenVPN commands and their applicable modes.

Figure 63-1: OpenVPN commands and applicable modes

Mode	Command
Privileged Exec	show openvpn connections
	show openvpn connections detail
Interface Configuration	tunnel mode openvpn tap
	tunnel mode openvpn tun
	tunnel openvpn port
	tunnel openvpn tagging

Command List

- "ip tcp adjust-mss" on page 2768
- "ipv6 tcp adjust-mss" on page 2770
- "show interface tunnel (OpenVPN)" on page 2772
- "show openvpn connections" on page 2773
- "show openvpn connections detail" on page 2774
- "tunnel openvpn authentication" on page 2775
- "tunnel openvpn cipher" on page 2776

- "tunnel mode openvpn tap" on page 2778
- "tunnel mode openvpn tun" on page 2779
- "tunnel openvpn expiry-bytes" on page 2780
- "tunnel openvpn expiry-seconds" on page 2781
- "tunnel openvpn port" on page 2782
- "tunnel openvpn tagging" on page 2783

ip tcp adjust-mss

Overview Use this command to set the Maximum Segment Size (MSS) size for an interface, where MSS is the maximum TCP data packet size that the interface can transmit before fragmentation.

Use the **no** variant of this command to remove a previously specified MSS size for a PPP interface, and restore the default MSS size.

Syntax

```
ip tcp adjust-mss {<mss-size>|pmtu}
no ip tcp adjust-mss
```

Parameter	Description
<mss-size>	<64-1460> Specifies the MSS size in bytes.
pmtu	Adjust TCP MSS automatically with respect to the MTU on the interface.

Default The default setting allows a TCP server or a TCP client to set the MSS value for itself.

Mode Interface Configuration

Usage When a host initiates a TCP session with a server it negotiates the IP segment size by using the MSS option field in the TCP packet. The value of the MSS option field is determined by the Maximum Transmission Unit (MTU) configuration on the host.

You can set a feasible MSS value on the following interfaces:

- PPPoE
- Ethernet
- VTI Tunnels (IPSeC, GRE, IPv6, L2TP, OpenVPN)
- VLAN

Examples To configure an MSS size of 1452 bytes on PPP interface ppp0, use the commands:

```
awplus# configure terminal
awplus(config)# interface ppp0
awplus(config-if)# ip tcp adjust-mss 1452
```

To configure an MSS size of 1452 bytes on Ethernet interface eth1, use the commands:

```
awplus# configure terminal
awplus(config)# interface eth1
awplus(config-if)# ip tcp adjust-mss 1452
```

To restore the MSS size to the default size on PPP interface `ppp0`, use the commands:

```
awplus# configure terminal
awplus(config)# interface ppp0
awplus(config-if)# no ip tcp adjust-mss
```

Related Commands

mtu (PPP)

show interface

show interface (PPP)

show interface tunnel (GRE)

ipv6 tcp adjust-mss

Overview Use this command to set the IPv6 Maximum Segment Size (MSS) size for an interface, where MSS is the maximum TCP data packet size that the interface can transmit before fragmentation.

Use the **no** variant of this command to remove a previously specified MSS size for a PPP interface, and restore the default MSS size.

Syntax

```
ip tcp adjust-mss {<mss-size>|pmtu}
no ip tcp adjust-mss
```

Parameter	Description
<mss-size>	<64-1460> Specifies the MSS size in bytes.
pmtu	Adjust TCP MSS automatically with respect to the MTU on the interface.

Default The default setting allows a TCP server or a TCP client to set the MSS value for itself.

Mode Interface Configuration

Usage When a host initiates a TCP session with a server it negotiates the IP segment size by using the MSS option field in the TCP packet. The value of the MSS option field is determined by the Maximum Transmission Unit (MTU) configuration on the host.

You can set a feasible MSS value on the following interfaces:

- PPPoE
- Ethernet
- VTI Tunnels (IPSec, GRE, IPv6, L2TP, OpenVPN)
- VLAN

Examples To configure an IPv6 MSS size of 1452 bytes on PPP interface ppp0, use the commands:

```
awplus# configure terminal
awplus(config)# interface ppp0
awplus(config-if)# ipv6 tcp adjust-mss 1452
```

To configure an IPv6 MSS size of 1452 bytes on Ethernet interface eth1, use the commands:

```
awplus# configure terminal
awplus(config)# interface eth1
awplus(config-if)# ip tcp adjust-mss 1452
```

To restore the MSS size to the default size on PPP interface `ppp0`, use the commands:

```
awplus# configure terminal
awplus(config)# interface ppp0
awplus(config-if)# no ip tcp adjust-mss
```

Related Commands

mtu (PPP)

show interface

show interface (PPP)

show interface tunnel (GRE)

show interface tunnel (OpenVPN)

Overview Use this command to display status information of tunnels.

The tunnel remains inactive if no valid tunnel source or tunnel destination is configured.

Syntax `show interface tunnel<tunnel-index>`

Parameter	Description
`tunnel`	`Specify this parameter to display tunnel status information of a given tunnel identified by the <0-255> parameter.`
<tunnel-index>	Specify a tunnel index in the range from 0 through 255.

Mode Privileged Exec

Examples To display brief status information for OpenVPN `tunnel0`, enter the command below:

```
awplus# show interface tunnel0
```

Output Figure 63-2: Example output from the **show interface tunnel** command

```
awplus#show interface tunnel0
Interface tunnel0
  Link is UP, administrative state is UP
  Hardware is Tunnel
  IPv4 address 192.168.1.1/24 pointopoint 192.168.1.255
  IPv6 address 2001:db8:1::1/64
  IPv6 address fe80::200:cdff:fe38:111/64
  index 12 metric 1 mtu 1500
  <UP,POINTOPOINT,RUNNING,MULTICAST>
  SNMP link-status traps: Disabled
  Tunnel source UNKNOWN, destination UNKNOWN
  Tunnel name local AR3050S, remote  UNKNOWN
  Tunnel ID local (not set), remote (not set)
  Tunnel protocol/transport openvpn tun, key disabled, sequencing disabled
  Tunnel TTL -
  Checksumming of packets disabled, path MTU discovery disabled
    input packets 0, bytes 0, dropped 0, multicast packets 0
    output packets 8, bytes 488, multicast packets 0 broadcast packets 0
  Time since last state change: 0 days 00:00:36
```

show openvpn connections

Overview Use this command to show information about connected OpenVPN users.

Syntax `show openvpn connections`

Mode Privileged Exec

Examples To show information about connected OpenVPN users, use the command:

```
awplus# show openvpn connections
```

Output Figure 63-3: Example output from the **show openvpn connections** command

```
awplus#show openvpn connections

Maximum connections: 100


Interface: tunnel0
                                Rx     Tx
Username    Real Address              Bytes   Bytes   Connected
Since
-------------------------------------------------------------------
--------------
foo         ::ffff:192.168.1.2        3553    3906    Wed Aug 13
01:09:07 2014
```

Related Commands show openvpn connections detail

show openvpn connections detail

Overview Use this command to show detailed information about connected OpenVPN users.

Note that in the output parameters (such as Route, Address, DNS Server) for a specific user may vary because the parameters depend on the configuration information of the RADIUS server associated with the user.

Syntax

```
show openvpn connections detail
```

Mode Privileged Exec

Examples To show detailed information about connected OpenVPN users, use the command:

```
awplus# show openvpn connections detail
```

Output Figure 63-4: Example output from the **show openvpn connections detail** command

```
awplus#show openvpn connections detail

Interface: tunnel0
 Username: user1
  Route:      192.168.20.0 255.255.255.0 192.168.10.2
  Address:    192.168.10.3 255.255.255.0
  DNS Server: 192.168.10.253
  DNS Server: 192.168.10.254
  VID:        20
 Username: user2
  Route:      192.168.20.0 255.255.255.0 192.168.10.2
  Address:    192.168.10.4 255.255.255.0
  DNS Server: 192.168.10.253
  DNS Server: 192.168.10.254
  VID:        20
```

Related Commands show openvpn connections

tunnel openvpn authentication

Overview Use this command to configure the data channel authentication digest for an OpenVPN tunnel.

Use the **no** variant of this command to set the data channel authentication digest for an OpenVPN tunnel to its default value of SHA1.

Syntax

```
tunnel openvpn authentication {sha1|sha256}
no tunnel openvpn authentication
```

Parameter	Description
aes128	Use Secure Hash Standard with 160-bit digest size as the data channel authentication digest.
aes256	Use Secure Hash Standard with 256-bit digest size as the data channel authentication digest.

Default SHA1

Mode Interface configuration

Usage You need to configure the client to use the same setting as the server. To do this, include one of the following lines in your client's OpenVPN configuration (.ovpn) file:

Setting	Line
SHA1	auth SHA1
SHA256	auth SHA256

Example To configure tunnel 5, which is an OpenVPN tunnel, to use SHA256 data channel authentication, use the commands:

```
awplus# configure terminal
awplus(config)# interface tunnel5
awplus(config-if)# tunnel openvpn authentication SHA256
```

Related Commands tunnel openvpn cipher

Command changes Version 5.4.7-0.1: command added

tunnel openvpn cipher

Overview Use this command to configure the data channel encryption cipher for an OpenVPN tunnel.

Use the **no** variant of this command to set the data channel encryption cipher for an OpenVPN tunnel to its default value of AES-128.

Syntax

```
tunnel openvpn cipher {aes128|aes256}
no tunnel openvpn cipher
```

Parameter	Description
aes128	Use Advanced Encryption Standard symmetric key block cipher with a 128-bit key as the data channel encryption cipher.
aes256	Use Advanced Encryption Standard symmetric key block cipher with a 256-bit key as the data channel encryption cipher.

Default AES-128

Mode Interface configuration

Usage You need to configure the client to use the same setting as the server. To do this, include one of the following lines in your client's OpenVPN configuration (.ovpn) file:

Setting	Line
AES-128	cipher AES-128-CBC
AES-256	cipher AES-256-CBC

For example, consider a client file tun.ovpn that has the following settings:

```
# tun.ovpn
client
auth-user-pass
cipher AES-128-CBC
dev tap
proto udp
remote 192.168.1.1
ca c:/users/support/cacert.pem
verb 7
```

To change the client to AES-256, replace the line "cipher AES-128-CBC" with "cipher AES-256-CBC".

Example To configure tunnel 5, which is an OpenVPN tunnel, to use AES-256 data channel encryption, use the commands:

```
awplus# configure terminal
awplus(config)# interface tunnel5
awplus(config-if)# tunnel openvpn cipher aes256
```

Related Commands tunnel openvpn authentication

Command changes Version 5.4.7-0.1: command added

tunnel mode openvpn tap

Overview Use this command to set the tunnel mode to OpenVPN TAP for a tunnel interface.

Use the **no** variant of this command to remove the mode.

TAP is a virtual network device. TAP creates a Virtual Tunnel Interface (VTI) that carries layer 2 frames. You may want to use TAP in the following scenarios:

- You want to use bridges to transport Ethernet frames
- You want to transport any network protocol, such as IPv4, IPv6, IPX

Note that TAP will cause broadcast overhead on the VPN tunnel and add the overhead of Ethernet headers on all packets transported over the VPN tunnel.

Note that the distribution of client IP addresses through DHCP is only supported in TAP mode.

Syntax

```
tunnel mode openvpn tap
no tunnel mode
```

Mode Interface Configuration

Examples To set `tunnel5` to be an OpenVPN tunnel in TAP mode, use the commands:

```
awplus# configure terminal
awplus(config)# interface tunnel5
awplus(config-if)# tunnel mode openvpn tap
```

To remove tunnel mode, use the commands:

```
awplus# configure terminal
awplus(config)# interface tunnel5
awplus(config-if)# no tunnel mode
```

Related Commands tunnel mode openvpn tun

tunnel mode openvpn tun

Overview Use this command to set the tunnel mode to OpenVPN TUN for a tunnel interface.

Use the **no** variant of this command to remove the mode.

TUN is a virtual network device. TUN creates a Virtual Tunnel Interface (VTI) that carries layer 3 packets. You may want to use TUN in the following scenarios:

- You want to transport traffic that is destined for the VPN client
- You want to transport only layer 3 packets
- You want to support VPN on mobile devices

Note that TUN cannot be used in bridges and broadcast traffic is not transported in TUN mode.

Syntax

```
tunnel mode openvpn tun
no tunnel mode
```

Mode Interface Configuration

Examples To set `tunnel5` to be an OpenVPN tunnel in TUN mode, use the commands:

```
awplus# configure terminal
awplus(config)# interface tunnel5
awplus(config-if)# tunnel mode openvpn tun
```

To remove tunnel mode, use the commands:

```
awplus# configure terminal
awplus(config)# interface tunnel5
awplus(config-if)# no tunnel mode
```

Related Commands tunnel mode openvpn tap

tunnel openvpn expiry-bytes

Overview Use this command to change how the firewall decides when to renegotiate client keys. By default, client keys are renegotiated after an hour; you can use this command to base rekeying on data usage instead of time.

Use the **no** variant of this command to return to time-based rekeying instead.

Syntax

```
tunnel openvpn expiry-bytes <0-4294967295>
no tunnel openvpn expiry-bytes
```

Parameter	Description
`expiry-bytes <0-4294967295>`	The number of bytes of traffic after which the firewall renegotiates client keys. A value of 0 bytes means that keys are not renegotiated after the VPN is formed. Otherwise, setting the expiry-bytes to a non-zero value will cause a rekey when the firewall has received that many bytes of traffic.

Default Not configured - the firewall renegotiates keys every hour instead.

Mode Interface mode for a tunnel

Example To configure tunnel2 to rekey after 1Gbyte of traffic, use the following commands:

```
awplus# configure terminal
awplus(config)# interface tunnel2
awplus(config-if)# tunnel openvpn expiry-bytes 1000000000
```

To return tunnel2 to the default of rekeying hourly, use the following commands:

```
awplus# configure terminal
awplus(config)# interface tunnel2
awplus(config-if)# no tunnel openvpn expiry-bytes
```

Related Commands tunnel openvpn expiry-seconds

Command changes Version 5.4.7-0.1: command added

tunnel openvpn expiry-seconds

Overview Use this command to change when client keys are renegotiated. By default, client keys are renegotiated after an hour; you can use this command to turn off renegotiation or to change that time period.

Use the **no** variant of this command to return to the default of 1 hour.

Syntax

```
tunnel openvpn expiry-seconds <0-4294967295>
no tunnel openvpn expiry-seconds
```

Parameter	Description
`expiry-seconds <0-4294967295>`	The length of time after which the firewall renegotiates client keys. A value of 0 seconds means that keys are not renegotiated after the VPN is formed. Otherwise, setting the expiry-seconds to a non-zero timer value will cause a rekey when that time is exceeded.

Default 3600 seconds (1 hour).

Mode Interface mode for a tunnel

Example To configure tunnel2 to rekey every 30 minutes, use the following commands:

```
awplus# configure terminal
awplus(config)# interface tunnel2
awplus(config-if)# tunnel openvpn expiry-seconds 1800
```

To return tunnel2 to the default of rekeying hourly, use the following commands:

```
awplus# configure terminal
awplus(config)# interface tunnel2
awplus(config-if)# no tunnel openvpn expiry-seconds
```

Related Commands tunnel openvpn expiry-bytes

Command changes Version 5.4.7-0.1: command added

tunnel openvpn port

Overview Use this command to specify the UDP listening port that is used to receive OpenVPN tunnel connections.

Use the **no** variant to set the port number to its default value which is 1194.

Syntax

```
tunnel openvpn port <1-65535>
no tunnel openvpn port
```

Parameter	Description
<1-65535>	Port number from 1 through 65535.

Default The default UDP port number is 1194.

Mode Interface Configuration

Usage If firewall protection is enabled, you need to create a firewall rule that allows the OpenVPN application traffic to traverse the firewall. OpenVPN is a pre-defined application with destination port number 1194. You can use the show application detail command to see the application details. If you specify a UDP number that is different to the default port number, you need to create an application with the same specified UDP port number for OpenVPN, and then create a firewall rule to allow the application to traverse the firewall. For more information about firewall rules, see the rule (Firewall) command.

Examples To configure tunnel `tunnel5` to receive incoming tunnel connections on UDP port 4567, use the commands:

```
awplus(config)# interface tunnel5
awplus(config-if)# tunnel openvpn port 4567
```

To remove the specified UDP port for tunnel `tunnel5`and set the UDP port to its default value, use the commands:

```
awplus# configure terminal
awplus(config)# interface tunnel5
awplus(config-if)# no tunnel openvpn port
```

tunnel openvpn tagging

Overview This command configures an OpenVPN tunnel to add an 802.1Q tag (a VLAN ID) to traffic received over the tunnel. VLAN ID (VID) is a VLAN identifier that is used to determine which VLAN the traffic belongs to. The VID is determined from information received from the RADIUS server during the authentication process. If no VID information is received from the RADIUS server, the value specified in this command is used.

Use the **no** variant of this command to remove the VID over the tunnel.

Note that you can add an 802.1Q tag in the TAP mode only.

Syntax

```
tunnel openvpn tagging <1-4094>
no tunnel openvpn tagging
```

Parameter	Description
<1-4094>	VLAN ID from 1 through 4094

Mode Interface Configuration

Examples To add a 802.1Q tag to packets received over tunnel `tunnel5`, use the commands:

```
awplus# configure terminal
awplus(config)# interface tunnel5
awplus(config-if)# tunnel openvpn tagging 1
```

To remove the 802.1Q tag over tunnel `tunnel5`, use the commands:

```
awplus# configure terminal
awplus(config)# interface tunnel5
awplus(config-if)# no tunnel openvpn tagging
```

64 L2TP Commands

Introduction

This chapter provides an alphabetical reference of commands used to configure L2TPv2 and L2TPv3 tunnels.

For introductory information about L2TPV3 in AlliedWare Plus, including overview and configuration information, see the L2TPv3 Ethernet Pseudowire Feature Overview and Configuration Guide.

For introductory information about tunneling of PPP over L2TPv2 in AlliedWare Plus, including overview and configuration information, see the L2TPv2 Feature Overview and Configuration Guide

Command List

- "crypto isakmp key" on page 2786
- "debug l2tp" on page 2788
- "destination" on page 2789
- "encapsulation ppp" on page 2790
- "ip-version" on page 2792
- "l2tp tunnel" on page 2793
- "l2tp unmanaged port" on page 2795
- "l2tp-profile" on page 2796
- "local-subaddress" on page 2797
- "protection ipsec" on page 2798
- "protection local-name" on page 2799
- "protection profile" on page 2801
- "protection remote-name" on page 2802
- "remote-subaddress" on page 2804
- "shared-secret" on page 2805

- "show debugging l2tp" on page 2806
- "show interface tunnel (L2TPv3)" on page 2807
- "show isakmp key (L2TPv3)" on page 2808
- "show l2tp session" on page 2809
- "show l2tp tunnel" on page 2811
- "show l2tp tunnel config-check" on page 2815
- "show running-config l2tp-profile" on page 2817
- "show running-config l2tp-tunnel" on page 2818
- "source" on page 2819
- "tunnel local id" on page 2820
- "tunnel mode (L2TPv3)" on page 2821
- "tunnel protection ipsec" on page 2822
- "tunnel remote id" on page 2823
- "version" on page 2824

crypto isakmp key

Overview Use this command to configure a pre-shared authentication key.

Pre-shared key authentication uses optionally encrypted shared keys identified by hostname, IPv4 or IPv6 address. Pre-shared keys are not viewable and stored encrypted in the running-configuration.

You must configure this key whenever you specify pre-shared keys in an (Internet Key Exchange) IKE policy and at both peers.

To use the no variant to remove a previously created pre-shared key.

Syntax

```
crypto isakmp key [8] <key> {hostname <host-name>|address
{<ipv4-address>|<ipv6-address>}
```

```
no crypto isakmp key [8] <key> {hostname
<host-name>|address {<ipv4-address>|<ipv6-address>}
```

Parameter	Description
`crypto`	Security specific command.
`isakmp`	Internet Security Association Key Management Protocol provides a common framework for key management implementations.
`key`	Pre-shared key.
`<key>`	Specify the pre-shared key. Us any combination of alphanumeric characters up to 128 bytes.
`8`	Specifies that an encrypted key follows.
`<host-name>`	Destination hostname.
`<ipv4-addr>`	Destination IPv4 address. The IPv4 address uses the format A.B.C.D.
`<ipv6-addr>`	Destination IPv6 address. The IPv4 address uses the format X:X::X:X.

Default ISAKMP keys do not exist.

Mode Global Configuration

Examples To configure a pre-shared authentication key for a destination host, use the commands:

```
awplus#configure terminal
```

```
awplus(config)#crypto isakmp key friend hostname
mypeer@my.domain.com
```

To configure a pre-shared authentication key at a peer with IPv4 address, use the commands:

```
awplus#configure terminal
awplus(config)#crypto isakmp key friend address 192.168.1.1
```

To configure a pre-shared encrypted authentication key at a peer with IPv4 address, use the commands:

```
awplus#configure terminal
awplus(config)#crypto isakmp key 8 Nhe6ioQmzbysQaJr6Du+cA== address 192.168.1.2
```

To remove a pre-shared key at a peer, use the commands:

```
awplus#configure terminal
awplus(config)#no crypto isakmp key friend hostname mypeer@my.domain.com
```

debug l2tp

Overview Use this command to enable debugging of L2TPv2 tunnels.

Use the **no** variant of this command to disable debugging of L2TPv2 tunnels.

Syntax

```
debug l2tp
no debug l2tp
undebug l2tp
```

Default Debugging of L2TPv2 tunnels is disabled by default.

Mode Privileged Exec

Example To enable debugging for L2TPv2 tunnels, use the commands:

```
awplus# debug l2tp
awplus# terminal monitor
% Warning: Console logging enabled
```

To disable debugging of L2TPv2 tunnels, use the command:

```
awplus# no debug l2tp
```

or the command:

```
awplus# undebug l2tp
```

Related Commands debug pppoe-ac

show debugging l2tp

destination

Overview Use this command to set the destination of an L2TP tunnel.

Use the **no** variant of this command to remove the destination from the L2TP tunnel.

Syntax

```
destination [<ipv4-addr>|<ipv6-addr>|<domain-name>]
no destination
```

Parameter	Description
<ipv4-addr>	The destination of the L2TP tunnel as an IPv4 address.
<ipv6-addr>	The destination of the L2TP tunnel as an IPv6 address.
<domain-name>	The destination of the L2TP tunnel as a fully-qualified domain name.

Default No destination is set by default.

Mode L2TP Tunnel Configuration

Example To set the destination IP address for tunnel1 to 10.1.1.1, use the commands:

```
awplus# configure terminal
awplus(config)# l2tp tunnel tunnel1
awplus(config-l2tp-tunnel)# destination 10.1.1.1
```

To remove the destination IP address from tunnel1, use the commands:

```
awplus# configure terminal
awplus(config)# l2tp tunnel tunnel1
awplus(config-l2tp-tunnel)# no destination
```

Related Commands

encapsulation ppp

ip-version

l2tp tunnel

show l2tp tunnel config-check

show running-config l2tp-tunnel

source

version

encapsulation ppp

Overview Use this command to enable PPP encapsulation and create one or more PPP interfaces over Ethernet, a cellular interface, or a L2TPv2 managed VPN.

Use the **no** variant of this command to disable PPP encapsulation and remove the specified PPP interface.

Syntax

```
encapsulation ppp <index>
no encapsulation ppp <index>
```

Parameter	Description
<index>	The PPP interface index number in the range from 0 to 255.

Default No PPP encapsulation or interfaces are configured by default.

Mode Interface Configuration mode for an Ethernet interface (e.g. **interface eth1**), or an Ethernet sub-interface (e.g. **interface eth1.1**), or a cellular interface (e.g. **interface cellular0**).

L2TP Tunnel Configuration mode for an L2TP tunnel (e.g. **l2tp tunnel tunnel0**).

Examples To configure a PPP interface with index 0 for Ethernet interface eth1, use the commands:

```
awplus# configure terminal
awplus(config)# interface eth1
awplus(config-if)# encapsulation ppp 0
```

To shut down the ppp0 interface and remove it from Ethernet interface eth1, use the commands:

```
awplus# configure terminal
awplus(config)# interface ppp0
awplus(config-if)# shutdown
awplus(config-if)# interface eth1
awplus(config-if)# no encapsulation ppp 0
```

To set the L2TP tunnel tunnel1 to encapsulate the PPP interface with index 1, use the commands:

```
awplus# configure terminal
awplus(config)# l2tp tunnel tunnel1
awplus(config-l2tp-tunnel)# encapsulation ppp 1
```

To remove the PPP interface with index 1 from L2TP tunnel tunnel1, use the commands:

```
awplus# configure terminal
awplus(config)# l2tp tunnel tunnel1
awplus(config-l2tp-tunnel)# no encapsulation ppp 1
```

Related Commands

l2tp tunnel

ppp service-name (PPPoE)

show interface (PPP)

ip-version

Overview Use this command to set the IP version for the L2TP tunnel.

The IP version must be set to the same value at both ends of the tunnel.

Syntax

```
ip-version [4|6]
```

Parameter	Description
4	IPv4
6	IPv6

Default The IP version is set to IPv4 by default.

Mode L2TP Tunnel Configuration

Example To set the IP version for tunnel1 to IPv6, use the commands:

```
awplus# configure terminal
awplus(config)# l2tp tunnel tunnel1
awplus(config-l2tp-tunnel)# ip-verson 6
```

To set the IP version for tunnel1 to the default (IPv4), use the commands:

```
awplus# configure terminal
awplus(config)# l2tp tunnel tunnel1
awplus(config-l2tp-tunnel)# ip-version 4
```

Related Commands

encapsulation ppp

ip-version

l2tp tunnel

show running-config l2tp-tunnel

show l2tp tunnel config-check

source

version

l2tp tunnel

Overview Use this command to create a named L2TP tunnel, and to enter L2TP Tunnel Configuration mode to configure it.

Use the **no** variant of this command to remove the named tunnel and all of its configuration.

Syntax

```
l2tp tunnel <tunnel-name>
no l2tp tunnel <tunnel-name>
```

Parameter	Description
<tunnel-name>	The name of the tunnel to create, change or delete.

Default No L2TP tunnel is configured by default.

Mode Global Configuration

Example To create and begin configuring a new L2TP tunnel named 'tunnel1', use the commands:

```
awplus# configure terminal
awplus(config)# l2tp tunnel tunnel1
awplus(config-l2tp-tunnel)#
```

To remove the tunnel 'tunnel1' and its configuration, use the commands:

```
awplus# configure terminal
awplus(config)# no l2tp tunnel tunnel1
```

Related Commands

destination

encapsulation ppp

ip-version

local-subaddress

protection ipsec

protection local-name

protection profile

protection remote-name

remote-subaddress

shared-secret

show l2tp session

show l2tp tunnel

show l2tp tunnel config-check

show running-config l2tp-tunnel

source

version

l2tp unmanaged port

Overview Use this command to set the UDP port for an (IPv4 and IPv6) unmanaged L2TP tunnel (L2TPv3 Ethernet Pseudowires).

This command can only change the UDP port when there is no unmanaged L2TP tunnel (L2TPv3 Ethernet Pseudowires) configured.

Use the **no** variant of this command to reset the UDP port to the default (1701).

Syntax

```
l2tp unmanaged port [<1-65535>]
no l2tp unmanaged port
```

Parameter	Description
<1-65535>	The number of the UDP port to use for an unmanaged L2TP tunnel (L2TPv3 Ethernet Pseudowires).

Default The UDP port is 1701 by default.

Mode Global Configuration

Usage The default UDP port for both unmanaged and managed L2TP tunnels is 1701. If both kinds of tunnel will be configured, the UDP port for the unmanaged tunnel must be changed to a different port by using the **l2tp unmanaged port** command.

Be aware of potential clashes with other UDP port users. Unless it is likely to be used for other purposes, we recommend configuring UDP port 1702 as a suitable alternative.

Example To set the UDP port for an L2TP unmanaged tunnel (L2TPv3 Ethernet Pseudowires) to 1702, use the following commands:

```
awplus# configure terminal
awplus(config)# l2tp unmanaged port 1702
```

Related Commands tunnel mode (L2TPv3)

show running-config

l2tp-profile

Overview Use this command to create an L2TP profile and to enter the L2TP Profile Configuration mode.

Use the **no** variant of this command to remove the L2TP profile and all its configuration.

Syntax

```
l2tp-profile <name>
no l2tp-profile <name>
```

Parameter	Description
<name>	The name of the L2TP profile being created or configured.

Default No L2TP profile is configured by default. This command is not configured by default.

Mode Global Configuration

Example To create a L2TP profile named "public", use the commands:

```
awplus# configure terminal
awplus(config)# l2tp-profile public
awplus(config-l2tp-profile)#
```

To remove all configuration of this L2TP profile, use the commands:

```
awplus# configure terminal
awplus(config)# no l2tp-profile public
```

Related Commands

l2tp profile

pppoe-ac

shared-secret

show running-config l2tp-profile

version

local-subaddress

Overview Use this command to set the local sub-address for L2TPv2 tunnel authentication.

Use the **no** variant of this command to remove the configured local sub-address.

Syntax

```
local-subaddress [<sub-address>]
no local-subaddress
```

Parameter	Description
<sub-address>	The local sub-address for the tunnel.

Default The local sub-address is not set by default; by default, the received L2TPv2 sub-address AVP will not be checked before establishing the tunnel.

Mode L2TP Tunnel Configuration

Usage If a local sub-address is set, this is checked against incoming the sub-address AVP as a requirement for tunnel establishment. The received sub-address AVP content must match the configured local sub-address.

Example To set the local-sub address of tunnel1 to 'office1', use the commands:

```
awplus# configure terminal
awplus(config)# l2tp tunnel tunnel1
awplus(config-l2tp-tunnel)# local-subaddress office1
```

To remove the local sub-address configuration from tunnel1, use the commands:

```
awplus# configure terminal
awplus(config)# l2tp tunnel tunnel1
awplus(config-l2tp-tunnel)# no local-subaddress
```

Related Commands

l2tp tunnel

remote-subaddress

show l2tp tunnel config-check

show running-config l2tp-tunnel

protection ipsec

Overview Use this command to enable IPsec protection on the L2TP tunnel.

Use the **no** variant of this command to disable IPsec on the tunnel.

Syntax

```
protection ipsec
no protection ipsec
```

Default IPsec protection is disabled by default.

Mode L2TP Tunnel Configuration

Example To protect tunnel1 with IPsec, use the commands:

```
awplus# configure terminal
awplus(config)# l2tp tunnel tunnel1
awplus(config-l2tp-tunnel)# protection ipsec
```

To disable IPsec protection for tunnel1, use the commands:

```
awplus# configure terminal
awplus(config)# l2tp tunnel tunnel1
awplus(config-l2tp-tunnel)# no protection ipsec
```

Related Commands

l2tp tunnel

protection ipsec

protection local-name

protection profile

protection remote-name

show l2tp tunnel config-check

show running-config l2tp-tunnel

protection local-name

Overview Use this command to set the IPsec local name for the L2TP tunnel. This is the local identifier for IKE.

Use the **no** variant of this command to reset the local name to the default—the source IP address of the L2TP tunnel.

Syntax

```
protection local-name [<ipsec-local-name>]
no protection local-name
```

Parameter	Description
<ipsec-local-name>	The IPsec local name for the tunnel.

Default By default, the IPsec local name is set to the source IP address of the L2TP tunnel.

Mode L2TP Tunnel Configuration

Usage If no local name is configured with this command, the source IP address of the tunnel is used. If a local name is configured with this command, the **crypto isakmp key** command is required to configure a preshared authentication key using this local name as the hostname.

Example To set the IPsec local name for tunnel1 to office1 and set the key to 'friend', use the commands:

```
awplus# configure terminal
awplus(config)# l2tp tunnel tunnel1
awplus(config-l2tp-tunnel)# protection ipsec
awplus(config-l2tp-tunnel)# protection local-name office1
awplus(config)# crypto isakmp key friend hostname office1
```

To remove the IPsec local name for tunnel1, use the commands:

```
awplus# configure terminal
awplus(config)# l2tp tunnel tunnel1
awplus(config-l2tp-tunnel)# no protection local-name
```

Related Commands

crypto isakmp key

l2tp tunnel

protection ipsec

protection profile

protection remote-name

show l2tp tunnel config-check

show running-config l2tp-tunnel

protection profile

Overview Use this command to set the IPsec profile to use for this L2TP tunnel.

Use the **no** variant of this command to set it back to the default IPsec profile: the profile named 'default'.

Syntax

```
protection profile [<profile-name>]
no protection profile
```

Parameter	Description
<profile-name>	The name of the IPsec profile to use. This is the profile created by the **crypto ipsec profile** command.

Default The L2TP tunnel protection profile is set to the IPsec profile named 'default' by default.

Mode L2TP Tunnel Configuration

Example To set up tunnel1 with IPsec protection using IPsec profile 'profile1', use the commands:

```
awplus# configure terminal
awplus(config)# l2tp tunnel tunnel1
awplus(config-l2tp-tunnel)# protection ipsec
awplus(config-l2tp-tunnel)# protection profile profile1
```

To reset tunnel1 to use IPsec protection with IPsec profile 'default', use the commands:

```
awplus# configure terminal
awplus(config)# l2tp tunnel tunnel1
awplus(config-l2tp-tunnel)# no protection profile
```

Related Commands

crypto ipsec profile

l2tp tunnel

protection ipsec

protection local-name

protection remote-name

show l2tp tunnel config-check

show running-config l2tp-tunnel

protection remote-name

Overview Use this command to set the L2TP tunnel IPsec remote name. This is the remote identifier for IKE.

Use the **no** variant of this command to reset the remote name to the default—the destination IP address of the tunnel.

Syntax

```
protection remote-name [<ipsec-remote-name>]
no protection remote-name
```

Parameter	Description
<ipsec-remote-name>	The IPsec remote name for the tunnel.

Default By default, the IPsec remote name is set to the destination IP address of the tunnel.

Mode L2TP Tunnel Configuration

Usage In order to set the IPsec remote name for the tunnel and add a corresponding ISAKMP key for the tunnel, set the IPsec remote name with this command (**protection remote-name**) and set the key for this by using the **crypto isakmp key** command with this remote name as the hostname.

Example To set the IPsec remote name for tunnel1 to 'office2' and set the key to 'friend', use the commands:

```
awplus# configure terminal
awplus(config)# l2tp tunnel tunnel1
awplus(config-l2tp-tunnel)# protection ipsec
awplus(config-l2tp-tunnel)# protection remote-name office2
awplus(config)# crypto isakmp key friend hostname office2
```

To reset the IPsec remote name for tunnel1 to default (destination IP address of the tunnel), use the commands:

```
awplus# configure terminal
awplus(config)# l2tp tunnel tunnel1
awplus(config-l2tp-tunnel)# no protection remote-name
```

Related Commands

crypto isakmp key

l2tp tunnel

protection ipsec

protection local-name

protection profile

show l2tp tunnel config-check

show running-config l2tp-tunnel

remote-subaddress

Overview Use this command to set the remote sub-address for L2TPv2 tunnel authentication.

Use the **no** variant of this command to remove the sub-address from the tunnel configuration.

Syntax

```
remote-subaddress [<sub-address>]
no remote-subaddress
```

Parameter	Description
<sub-address>	The remote sub-address for the tunnel.

Default The remote sub-address is not set by default; the outgoing L2TP sub-address AVP for the tunnel will not be populated.

Mode L2TP Tunnel Configuration

Usage If the L2TP peer is also an AR-Series firewall, the remote-subaddress must match the local sub-address configured at the other end of the tunnel.

If a remote sub-address is configured for the tunnel, this value is placed in the outgoing sub-address AVP. The other tunnel end point can check this value against its configured local sub-address for the tunnel before establishing the tunnel.

Example To set the remote sub-address of tunnel1 to 'office1', use the commands:

```
awplus# configure terminal
awplus(config)# l2tp tunnel tunnel1
awplus(config-l2tp-tunnel)# remote-subaddress office1
```

To remove the remote sub-address configuration from tunnel1, use the commands:

```
awplus# configure terminal
awplus(config)# l2tp tunnel tunnel1
awplus(config-l2tp-tunnel)# no remote-subaddress
```

Related Commands

l2tp tunnel

local-subaddress

show l2tp tunnel config-check

show running-config l2tp-tunnel

shared-secret

Overview Use this command to set the secret password that is shared with L2TP tunnel peers.

Use the **no** variant of this command to remove the shared secret.

Syntax

```
shared-secret <secret>
no shared-secret
```

Parameter	Description
<secret>	The password shared with the tunnel peer.

Default No shared secret is configured by default.

Mode L2TP Profile Configuration and L2TP Tunnel Configuration

Example To set tunnel secret to "my_password" for tunnel profile "public", use the commands:

```
awplus# configure terminal
awplus(config)# l2tp-profile public
awplus(config-l2tp-profile)# shared-secret my_password
```

To set tunnel secret to "my_password" for tunnel "tunnelone", use the commands:

```
awplus# configure terminal
awplus(config)# l2tp tunnel tunnelone
awplus(config-l2tp-tunnel)# shared-secret my_password
```

To remove the tunnel secret for the tunnel profile, use the commands:

```
awplus# configure terminal
awplus(config)# l2tp-profile public
awplus(config-l2tp-profile)# no shared-secret
```

To remove the tunnel secret for the tunnel ‘tunnelone’, use the commands:

```
awplus# configure terminal
awplus(config)# l2tp tunnel tunnelone
awplus(config-l2tp-tunnel)# no shared-secret
```

Related Commands

l2tp tunnel

l2tp-profile

show running-config l2tp-profile

version

show debugging l2tp

Overview Use this command to display whether debugging of L2TP tunnels is on or off.

Syntax

```
show debugging l2tp
```

Mode Privileged Exec

Example To display whether debugging of L2TP tunnels is on or off, use the command:

```
awplus# show debugging l2tp
```

Output Figure 64-1: Example output from **show debugging l2tp**

```
awplus#show debugging l2tp
L2TP Tunnel Debugging is on
```

Related Commands debug l2tp

show interface tunnel (L2TPv3)

Overview Use this command to display status information of L2TPv3 tunnels.

Syntax `show interface tunnel<0-255>`

Parameter	Description
<0-255>	Specify an L2TPv3 tunnel index in the range from 0 through 255.

Mode Privileged Exec

Examples To display status information for L2TPv3 tunnel tunnel20, use the command.

```
awplus#show interface tunnel20
```

Output Figure 64-2: Example output of the **show tunnel interface** command on the console.

Table 64-1:

```
awplus#show interface tunnel20
Interface tunnel20
 Link is UP, administrative state is UP
 Hardware is Tunnel
 IPv4 address 192.168.10.1/24 broadcast 192.168.10.255
 IPv6 address 2001:db8:10::1/64
 IPv6 address fe80::5054:d4ff:fe84:d1aa/64
 index 16795714 metric 1 mtu 1480
 arp ageing timeout 300
 <UP,BROADCAST,RUNNING,MULTICAST>
 SNMP link-status traps: Disabled
 Tunnel source 192.168.1.1, destination 192.168.1.2
 Tunnel name local 192.168.1.1, remote 192.168.1.2
 Tunnel ID local 66, remote 77
 Tunnel protocol/transport l2tp v3, key disabled, sequencing
disabled
 Tunnel TTL inherit
 Checksumming of packets disabled, path MTU discovery disabled
 input packets 0, bytes 0, dropped 0, multicast packets 0
 output packets 5, bytes 366, multicast packets 0 broadcast
packets 0
 Time since last state change: 0 days 00:00:24
```

show isakmp key (L2TPv3)

Overview Use this command to show the ISAKMP pre-shared key. Pre-shared key authentication using optionally encrypted shared keys identified by hostname, IPv4 or IPv6 address. Pre-shared keys are not viewable and stored encrypted in the running-configuration.

Syntax

```
show [crypto] isakmp key
```

Parameter	Description
`crypto`	Security specific command.
`isakmp`	Internet Security Association Key Management Protocol provides a common framework for key management implementations.
`key`	Pre-shared key.

Mode Privileged Exec

Examples To show ISAKMP pre-share key, use the command.

```
awplus#show isakmp key
```

Output Figure 64-3: Example output of the **show isakmp key** command on the console.

Table 64-2:

```
awplus#show isakmp key
Hostname/IP address                    key
10.2.0.10                              mytunnelkey
```

show l2tp session

Overview Use this command to display a summary or detailed list of information about L2TP sessions.

Syntax

```
show l2tp session [detail]
```

Parameter	Description
`detail`	Displays more detailed information about L2TP sessions.

Mode Privileged Exec

Example To display summary information about all L2TPv2 sessions, use the command:

```
awplus# show l2tp session
```

Output Figure 64-4: Example output from **show l2tp session**

```
awplus#show l2tp session

L2TP Session Information

------------------------------------------------------------------
Session ID:                     59400
Tunnel ID:                      25351
State:                          RETRY
Type:                           LAIC
Created At:                     May 31 20:03:04 2016
Interface Name:                 ppp1
Remote Session ID:              61156
Establish Timeout:              120
```

Table 64-3: Parameters in the output from **show l2tp session**

Parameter	Description
`Session ID`	L2TP session ID.
`Tunnel ID`	The ID of the L2TP tunnel for this session.

Table 64-3: Parameters in the output from **show l2tp session** (cont.)

Parameter	Description
State	The current state of the L2TP session: • idle—Idle • wait-tunnel—Await tunnel • wait-reply—Await reply • wait-connect—Await connect • wait-cs-answer—Await circuit switched answer • established—Successful connection • retry—Retrying connection
Type	The type of the L2TP session: • LAIC—LAC incoming call • LAOC—LAC outgoing call • LNIC—LNS incoming call • LNOC—LNS outgoing call • UNSPEC—unspecified call type
Created At	The date and time when the session was created.
Interface Name	The name of the interface for this session.
Remote Session ID	The ID of the session on the peer.
Establish Timeout	The time (in seconds) that a session will wait for the peer to complete the session setup message exchange.

Related Commands

l2tp tunnel

show l2tp tunnel

show l2tp tunnel

Overview Use this command to display information about all the current L2TP tunnels.

Syntax

```
show l2tp tunnel [detail]
```

Parameter	Description
`detail`	Display additional detailed information about the tunnels.

Mode Privileged Exec

Usage The output from this command depends on whether it won the tiebreaker and took the LAC role for the tunnel, or lost the tiebreaker and took the LNS role. In the latter case, a corresponding idle LAC tunnel is also displayed.

Example To display information about all L2TPv2 tunnels, use the command:

```
awplus# show l2tp tunnel
```

Output Figure 64-5: Example output from **show l2tp tunnel**

```
AWP-2#show l2tp tunnel

L2TP Tunnel Information

------------------------------------------------------------------
Tunnel ID:                      25351
Tunnel Name:                    tunnel1
Local IP Address:               10.1.1.2
Remote IP Address:              10.1.1.1
State:                          ESTABLISHED
Created At:                     May 31 20:03:04 2016
Tunnel Mode:                    LAC
Remote Tunnel ID:               43832
Remote Host Name:               AWP-1
Remote Vendor Name:             Allied Telesis International
Local UDP Port:                 1701
Remote UDP Port:                1701
Hello Timeout:                  60
Retry Timeout:                  1
Idle Timeout:                   0
Establish Timeout:              60
```

Figure 64-6: Example output from **show l2tp tunnel detail**

```
awplus#show l2tp tunnel detail

L2TP Tunnel Information details

Tunnel 25351, from 10.1.1.2 to 10.1.1.1:-
  state: ESTABLISHED
  created at:  May 31 20:03:04 2016
  administrative name: 'tunnel1'
  created by admin: YES, tunnel mode: LAC, persist: YES
  peer tunnel id: 43832, host name: AWP-1
  UDP ports: local 1701, peer 1701
  authorization mode: CHALLENGE, hide AVPs: OFF
  digest type: md5
  tunnel secret: 'hello'
  session limit: 0, session count: 1
  tunnel profile: tunnel_profile_tunnel1, session profile:
    session_profile_tunnel1, peer profile: peer_profile_tunnel1
  hello timeout: 60, retry timeout: 1, idle timeout: 0
  establish timeout: 60
  persist pend timeout: 60
  rx window size: 10, tx window size: 10, max retries: 5
  use udp checksums: ON
  do pmtu discovery: OFF, mtu: 1460
  tos: inherit
  framing capability: SYNC ASYNC, bearer capability: DIGITAL
ANALOG
  use tiebreaker: ON
  tiebreaker: f6 5e 50 9c 02 99 45 83
  interopability flags: 128
  trace flags: PROTOCOL FSM API AVP FUNC XPRT DATA PPP SYSTEM
  Status:-
    peer vendor name: Allied Telesis International
    peer protocol version: 1.0, firmware 385
    peer framing capability: SYNC ASYNC
    peer bearer capability: DIGITAL ANALOG
    peer rx window size: 10
  Transport status:-
    ns/nr: 8/9, peer 8/8
    cwnd: 9, ssthresh: 10, congpkt_acc: 0
  Transport statistics:-
    out-of-sequence control/data discards: 0/0
    zlbs tx/txfail/rx: 6/0/5
    retransmits: 0, duplicate pkt discards: 0, data pkt discards:
      0
    hellos tx/txfail/rx: 1/0/5
    control rx packets: 14, rx bytes: 413
    control tx packets: 14, tx bytes: 542
    data rx packets: 4, rx bytes: 100, rx errors: 0
    data tx packets: 14, tx bytes: 512, tx errors: 0
  memory usage: 2111 bytes
  Events:-
    20:03:04 OPEN_REQ in state IDLE, new state WAITCTLREPLY
    20:03:04 SCCRP_ACCEPT in state WAITCTLREPLY, new state
ESTABLISHED
```

Table 65: Parameters in the output from **show l2tp tunnel** .

Parameter	Description
`Tunnel ID`	The L2TP tunnel ID, (assigned automatically by the device.
`Tunnel Name`	The name of the L2TP tunnel as specified by the **l2tp tunnel** command.
`Local IP Address`	The IPv4 or IPv6 address of the tunnel on this device. This is either specified by the configuration if the device is in LAC mode, or assigned automatically by the device if it is in LNS mode.This may be specified directly by the **source** command, or derived from the interface set by that command.
`Remote IP Address`	The IPv4 or IPv6 address of the device at the remote end of the tunnel. This may be specified directly by the **destination** command, or derived from a domain name set by that command.
`State`	The current state of the tunnel: • idle—Idle • wait-ctl-reply—Await control reply • wait-ctl-conn—Await connect reply • established—Successful connection • closing—Closing connection • retry—Tie breaker lost, retrying connection
`Created at`	The date and time when the tunnel was created.
`Tunnel Mode`	The tunnel mode: • LAC—L2TP Access Concentrator—the initiating end of the tunnel • LNS—L2TP Network Server—the other end of the tunnel, authenticates the user and starts the PPP negotiation.
`Remote Tunnel ID`	The tunnel ID on the L2TP peer.
`Remote Host Name`	The host name of the L2TP peer.
`Remote Vendor Name`	The name of the vendor for the L2TP peer device. E.g. Allied Telesis International.
`Local UDP Port`	By default the local UDP port used for both L2TPv2 managed tunnels and L2TPv3 unmanaged tunnels (Ethernet Pseudowires) is 1701. If both are configured, change the UDP port for the unmanaged tunnel (**l2tp unmanaged port** command).
`Remote UDP Port`	The UPD port used by the remote device for this L2TP tunnel.

Table 65: Parameters in the output from **show l2tp tunnel** . (cont.)

Parameter	Description
`Hello Timeout`	The period between sending L2TP Hello messages (in seconds).
`Retry Timeout`	The delay (in seconds) before sending the first retry of unacknowledged control frames.
`Idle Timeout`	The time (in seconds) that a tunnel will remain after its last session has been torn down.
`Establish Timeout`	The time (in seconds) that a tunnel will wait for the peer to complete the tunnel setup message exchange.

Related Commands l2tp tunnel

show l2tp tunnel config-check

Overview Use this command to check the configuration of the specified L2TP tunnel or all L2TP tunnels for errors or missing required configuration.

Syntax

```
show l2tp tunnel [<tunnel-name>] config-check
```

Parameter	Description
<tunnel-name>	The name of the L2TP tunnel to check. If not specified, all tunnels are checked.

Mode Privileged Exec

Usage Only tunnels that have a complete configuration may appear in the **show l2tp tunnel** commands. For details of the configuration in the system, use the **show running-config l2tp-tunnel** command.

Example To check for missing L2TP tunnel configuration for the tunnel 'tunnel1', use the command:

```
awplus# show l2tp tunnel config-check
```

Output Figure 64-7: Example output from **show l2tp tunnel config-check**

```
awplus#show l2tp tunnel config-check

L2TP Tunnel tunnel1:
  Complete Configuration


L2TP Tunnel tunnel2:
  Incomplete Configuration
  Missing tunnel name or tunnel name mismatch
  Required: PPP interface
  Required: destination
  Source IP address required when IPSec protection on
```

Table 64-1: Parameters in the output from **show l2tp tunnel config-check**

Parameter	Description
`Complete configuration`	The tunnel has a complete and valid configuration.
`Incomplete configuration`	There is configuration still required or invalid for this tunnel, as specified. Examples of possible messages indicating missing or invalid configuration include: • Missing tunnel name or tunnel name mismatch • Required: PPP interface • Required: destination • Required: IP version • Destination IP address does not match the configured IP version • Source IP address does not match the configured IP version • Source IP address required when IPSec protection on

Related Commands

show running-config l2tp-tunnel

show running-config l2tp-profile

Overview Use this command to display the running configuration for L2Tp profiles.

Syntax

```
show running-config l2tp-profile
```

Mode Privileged Exec

Example To display the running configuration of L2TP profiles, use the command:

```
awplus# show running-config l2tp-profile
```

Output Figure 64-8: Example output from **show running-config l2tp-profile**

```
awplus#show running-config l2tp-profile

l2tp-profile public
 version 2
 secret "my_password"
```

Related Commands

l2tp-profile

shared-secret

version

show running-config l2tp-tunnel

Overview Use this command to display the current details for L2TP tunnel configuration.

Syntax

```
show running-config l2tp-tunnel
```

Mode Privileged Exec

Example To display the L2TP tunnel running configuration, use the command:

```
awplus# show running-config l2tp-tunnel
```

Output Figure 64-9: Example output from **show running-config l2tp-tunnel**

```
awplus#show running-config l2tp-tunnel
l2tp tunnel example
 version 2
 ip-version 4
 encapsulation ppp 0
 source 1.0.0.2
 destination 1.0.0.1
 local-subaddress TUNNEL2
 remote-subaddress TUNNEL1
!
```

Related Commands

destination

encapsulation ppp

ip-version

l2tp tunnel

local-subaddress

protection ipsec

protection local-name

protection profile

protection remote-name

remote-subaddress

shared-secret

show l2tp tunnel config-check

source

version

source

Overview Use this command to set the source address or interface for an L2TP tunnel.

Use the **no** variant of this command to remove the source address or interface from an L2TP tunnel.

Syntax

```
source [<interface-name>|<ipv4-addr>|<ipv6-addr>
no source
```

Parameter	Description
<interface-name>	The name of the interface to be used as the tunnel starting point.
<ipv4-addr>	The IPv4 address to be used as the tunnel starting point.
<ipv6-addr>	The IPv6 address to be used as the tunnel starting point.

Default If no source address or interface is configured, the source address used will be calculated based on the route to the tunnel destination.

Mode L2TP Tunnel Configuration

Example To configure IP address 10.1.1.2 as the source address for the tunnel named 'tunnel1', use the commands:

```
awplus# configure terminal
awplus(config)# l2tp tunnel tunnel1
awplus(config-l2tp-tunnel)# source 10.1.1.2
```

To remove the configured source address from 'tunnel1', so that it uses the default source, use the commands:

```
awplus# configure terminal
awplus(config)# l2tp tunnel tunnel1
awplus(config-l2tp-tunnel)# no source
```

Related Commands destination

l2tp tunnel

show l2tp tunnel

tunnel local id

Overview This command specifies a tunnel local identifier sent to the peer to match.

Use the **no** variant of this command to remove the tunnel local ID.

Syntax

```
tunnel local id <1-2147483647>
no tunnel local id
```

Parameter	Description
<1-2147483647>	Tunnel ID from 1 through 2147483647

Default No tunnel local ID is set.

Mode Interface Configuration

Usage The endpoints of the tunnel must be configured by mirroring tunnel IDs, that is, the tunnel local ID on one endpoint must be specified as the tunnel remote ID on the other endpoint.

The local session ID defaults to the tunnel local ID and the local session ID is not configurable. A session provides the data channel in L2TPv3. There is a single pseudowire per L2TP session.

Examples To specify a tunnel local ID, use the commands:

```
awplus#configure terminal
awplus(config)#interface tunnel20
awplus(config-if)#tunnel mode l2tp v3
awplus(config-if)#tunnel local id 22
```

To remove the tunnel local ID, use the commands:

```
awplus#configure terminal
awplus(config)#interface tunnel20
awplus(config-if)#no tunnel local id
```

Related Commands tunnel remote id

Validation Commands show interface tunnel (L2TPv3)

tunnel mode (L2TPv3)

Overview Use this command to configure the encapsulation tunneling mode.

Use the **no** variant of this command to remove an established tunnel.

Syntax

```
tunnel mode {gre [ipv6]|ipsec {ipv4|ipv6}|ipv6|l2tp v3
[ipv6]|openvpn {tap|tun}}
```

```
no tunnel mode
```

Parameter	Description
`gre`	GRE IPv4 or IPv6 as the payload over IPv4 tunneling. IPv4 is the delivery protocol.
gre ipv6	GRE IPv4 or IPv6 as the payload over IPv6 tunneling. IPv6 is the delivery protocol.
`ipsec ipv4`	IPv4 IPsec tunnel
`ipsec ipv6`	IPv6 IPsec tunnel
`l2tp v3`	Layer 2 Tunneling Protocol version 3. By default, IPv4 is the deliver protocol.
`l2tp v3 ipv6`	Set IPv6 as the deliver protocol for L2TPv3
`openvpn tap`	OpenVPN TAP mode
openvpn `tun`	OpenVPN TUN mode

Mode Interface Configuration

Usage A tunnel will not become operational until it is configured with this command.

Examples To configure L2TPv3 as the encapsulation tunneling mode, use the commands:

```
awplus#configure terminal
awplus(config)#interface tunnel20
awplus(config-if)#tunnel mode l2tp v3
```

To remove the established tunnel, use the commands:

```
awplus#configure terminal
awplus(config)#interface tunnel20
awlus(config-if)#no tunnel mode
```

Validation Commands show interface tunnel (L2TPv3)

tunnel protection ipsec

Overview Use this command to optionally enable IPSec protection for packets encapsulated by this tunnel.

Use the no variant of this command to disable IPSec protection.

Syntax

```
tunnel protection ipsec
no tunnel protection ipsec
```

Default IPSec protection for packets encapsulated by tunnel is disabled.

Mode Interface Configuration

Usage You also need to configure a pre-shared key in conjunction with this command. See the crypto isakmpkey command for more information about configuring the pre-share key.

Examples To enable IPSec protection for packets encapsulated by tunnel114, use the commands:

```
awplus#configure terminal
awplus(config)#interface tunnel114
awplus(config-if)#tunnel protection ipsec
```

To disable IPSec protection for packets encapsulated by tunnel114, use the commands:

```
awplus#configure terminal
awplus(config)#interface tunnel114
awplus(config-if)#no tunnel protection ipsec
```

tunnel remote id

Overview This command specifies a tunnel remote identifier sent to the peer for match.

Use the **no** variant of this command to remove the tunnel remote ID.

Syntax

```
tunnel remote id <1-2147483647>
no tunnel remote id
```

Parameter	Description
<1-2147483647>	Tunnel ID from 1 through 2147483647

Default No tunnel remote ID is set.

Mode Interface Configuration

Usage The endpoints of the tunnel must be configured by mirroring tunnel IDs, that is, the tunnel remote ID on one endpoint must be specified as the tunnel local ID on the other endpoint.

The remote session ID defaults to the tunnel remote ID and the remote session ID is not configurable. A session provides the data channel in L2TPv3. There is a single pseudowire per L2TP session.

Examples To specify a tunnel remote ID, use the commands:

```
awplus#configure terminal
awplus(config)#interface tunnel20
awplus(config-if)#tunnel mode l2tp v3
awplus(config-if)#tunnel remote id 22
```

To remove the tunnel remote ID, use the commands:

```
awplus#configure terminal
awplus(config)#interface tunnel20
awplus(config-if)#no tunnel remote id
```

Related Commands tunnel local id

Validation Commands show interface tunnel (L2TPv3)

version

Overview Use this command to specify the protocol version of a L2TP tunnel.

Syntax

```
version [<version>]
```

Parameter	Description
<version>	The protocol version of the L2TP tunnel. Version 2 is supported.

Default The L2TP version is 2 by default.

Mode L2TP Profile Configuration and L2TP Tunnel Configuration

Example To use L2TPv2 for L2TP tunnel profile 'public', use the commands:

```
awplus# configure terminal
awplus(config)# l2tp-profile public
awplus(config-l2tp-profile)# version 2
```

To use L2TPv2 for L2TP tunnel 'tunnelone', use the commands:

```
awplus# configure terminal
awplus(config)# l2tp tunnel tunnelone
awplus(config-l2tp-tunnel)# version 2
```

Related Commands

l2tp tunnel

l2tp-profile

shared-secret

show running-config l2tp-profile