# AR3050S

## UNIFIED THREAT MANAGEMENT FIREWALL

# Command Reference for AlliedWare Plus™ Version 5.5.0-2.x

C613-50445-01 Rev A

# Acknowledgments

This product includes software developed by the University of California, Berkeley and its contributors.

Copyright ©1982, 1986, 1990, 1991, 1993 The Regents of the University of California.

All rights reserved.

This product includes software developed by the OpenSSL Project for use in the OpenSSL Toolkit. For information about this see **www.openssl.org/**

Copyright ©1998-2008 The OpenSSL Project. All rights reserved.

This product includes software licensed under v2 and v3 of the GNU General Public License, available from: **www.gnu.org/licenses/gpl2.html** and **www.gnu.org/licenses/gpl.html** respectively.

Source code for all GPL licensed software in this product can be obtained from the Allied Telesis GPL Code Download Center at: **www.alliedtelesis.com/support/**

Allied Telesis is committed to meeting the requirements of the open source licenses including the GNU General Public License (GPL) and will make all required source code available.

If you would like a copy of the GPL source code contained in Allied Telesis products, please send us a request by registered mail including a check for US$15 to cover production and shipping costs and a CD with the GPL code will be mailed to you.

**GPL Code Request**
**Allied Telesis Labs (Ltd)**
**PO Box 8011**
**Christchurch**
**New Zealand**

Allied Telesis, AlliedWare Plus, Allied Telesis Management Framework, EPSRing, SwitchBlade, VCStack, and VCStack Plus are trademarks or registered trademarks in the United States and elsewhere of Allied Telesis, Inc.

Microsoft and Internet Explorer are registered trademarks of Microsoft Corporation. All other product names, company names, logos or other designations mentioned herein may be trademarks or registered trademarks of their respective owners.

© 2020 Allied Telesis, Inc.

All rights reserved. No part of this publication may be reproduced without prior written permission from Allied Telesis, Inc.

Allied Telesis, Inc. reserves the right to make changes in specifications and other information contained in this document without prior written notice. The information provided herein is subject to change without notice. In no event shall Allied Telesis, Inc. be liable for any incidental, special, indirect, or consequential damages whatsoever, including but not limited to lost profits, arising out of or related to this manual or the information contained herein, even if Allied Telesis, Inc. has been advised of, known, or should have known, the possibility of such damages.

# Contents

**PART 1: Setup and Troubleshooting . . . . . 121**

**Chapter 1: CLI Navigation Commands . . . . . 122**
Introduction . . . . . 122
configure terminal . . . . . 123
disable (Privileged Exec mode) . . . . . 124
do . . . . . 125
enable (Privileged Exec mode) . . . . . 126
end . . . . . 128
exit . . . . . 129
help . . . . . 130
logout . . . . . 131
show history . . . . . 132

**Chapter 2: Device GUI and Vista Manager EX Commands . . . . . 133**
Introduction . . . . . 133
atmf topology-gui enable . . . . . 134
http log webapi-requests . . . . . 135
http port . . . . . 136
http secure-port . . . . . 137
log event-host . . . . . 138
service http . . . . . 139
show http . . . . . 140
update webgui now . . . . . 141

**Chapter 3: File and Configuration Management Commands . . . . . 142**
Introduction . . . . . 142
autoboot enable . . . . . 146
boot config-file . . . . . 147
boot config-file backup . . . . . 149
boot system . . . . . 150
boot system backup . . . . . 152
cd . . . . . 153

copy (filename) . . . . . 154
copy debug . . . . . 156
copy running-config . . . . . 157
copy startup-config . . . . . 158
copy zmodem . . . . . 159
create autoboot . . . . . 160
delete . . . . . 161
delete debug . . . . . 162
dir . . . . . 163
edit . . . . . 165
edit (filename) . . . . . 166
erase factory-default . . . . . 167
erase startup-config . . . . . 168
ip tftp source-interface . . . . . 169
ipv6 tftp source-interface . . . . . 170
mkdir . . . . . 171
move . . . . . 172
move debug . . . . . 173
pwd . . . . . 174
rmdir . . . . . 175
show autoboot . . . . . 176
show boot . . . . . 177
show file . . . . . 179
show file systems . . . . . 180
show running-config . . . . . 182
show running-config interface . . . . . 185
show startup-config . . . . . 188
show version . . . . . 189
unmount . . . . . 190
write file . . . . . 191
write memory . . . . . 192
write terminal . . . . . 193

**Chapter 4: User Access Commands . . . . . 194**

Introduction . . . . . 194
aaa authentication enable default local . . . . . 196
aaa local authentication attempts lockout-time . . . . . 197
aaa local authentication attempts max-fail . . . . . 198
aaa login fail-delay . . . . . 199
clear aaa local user lockout . . . . . 200
clear line console . . . . . 201
clear line vty . . . . . 202
enable password . . . . . 203
enable secret (deprecated) . . . . . 206
exec-timeout . . . . . 207
flowcontrol hardware (asyn/console) . . . . . 209
length (asyn) . . . . . 211
line . . . . . 212
privilege level . . . . . 214
security-password history . . . . . 215
security-password forced-change . . . . . 216
security-password lifetime . . . . . 217
security-password min-lifetime-enforce . . . . . 218

security-password minimum-categories . . . . . 219
security-password minimum-length . . . . . 220
security-password reject-expired-pwd . . . . . 221
security-password warning . . . . . 222
service advanced-vty . . . . . 223
service password-encryption . . . . . 224
service telnet . . . . . 225
service terminal-length (deleted) . . . . . 226
show aaa local user locked . . . . . 227
show privilege . . . . . 228
show security-password configuration . . . . . 229
show security-password user . . . . . 230
show telnet . . . . . 231
show users . . . . . 232
telnet . . . . . 233
telnet server . . . . . 234
terminal length . . . . . 235
terminal resize . . . . . 236
username . . . . . 237

**Chapter 5: Subscription Licensing Commands . . . . . 239**
Introduction . . . . . 239
license update file . . . . . 240
license update online . . . . . 241
show license external . . . . . 243

**Chapter 6: Update Manager Commands . . . . . 244**
Introduction . . . . . 244
show resource . . . . . 245
update now . . . . . 247
update webgui now . . . . . 249

**Chapter 7: Web Redirect Commands . . . . . 250**
Introduction . . . . . 250
browser-only (web-redirect) . . . . . 251
enable (web-redirect) . . . . . 252
exclude ip . . . . . 253
exclude mac . . . . . 254
idle-time (web-redirect) . . . . . 255
repeat-time (web-redirect) . . . . . 257
server-url (web-redirect) . . . . . 258
show running-config web-redirect . . . . . 259
show web-redirect . . . . . 260
web-redirect . . . . . 261

**Chapter 8: System Configuration and Monitoring Commands . . . . . 262**
Introduction . . . . . 262
banner exec . . . . . 264
banner login (system) . . . . . 266
banner motd . . . . . 268
clock set . . . . . 270
clock summer-time date . . . . . 271

clock summer-time recurring . . . . . 273
clock timezone . . . . . 275
debug core-file . . . . . 276
hostname . . . . . 277
max-fib-routes . . . . . 279
max-static-routes . . . . . 281
no debug all . . . . . 282
reboot . . . . . 284
receive-packet-scheduler . . . . . 285
reload . . . . . 287
show clock . . . . . 288
show cpu . . . . . 290
show cpu history . . . . . 293
show debugging . . . . . 295
show interface memory . . . . . 296
show memory . . . . . 298
show memory allocations . . . . . 300
show memory history . . . . . 302
show memory pools . . . . . 303
show memory shared . . . . . 304
show process . . . . . 305
show reboot history . . . . . 307
show router-id . . . . . 308
show system . . . . . 309
show system environment . . . . . 310
show system environment counters . . . . . 311
show system interrupts . . . . . 313
show system mac . . . . . 314
show system pci device . . . . . 315
show system pci tree . . . . . 316
show system serialnumber . . . . . 317
show tech-support . . . . . 318
speed (asyn) . . . . . 320
terminal monitor . . . . . 322
undebug all . . . . . 323

**Chapter 9: Pluggables and Cabling Commands . . . . . 324**
Introduction . . . . . 324
clear fiber-monitoring interface . . . . . 325
debug fiber-monitoring . . . . . 326
fiber-monitoring action . . . . . 328
fiber-monitoring baseline . . . . . 330
fiber-monitoring enable . . . . . 332
fiber-monitoring interval . . . . . 333
fiber-monitoring sensitivity . . . . . 334
show system fiber-monitoring . . . . . 336
show system pluggable . . . . . 339
show system pluggable detail . . . . . 341
show system pluggable diagnostics . . . . . 344

**Chapter 10: Logging Commands . . . . . 346**
Introduction . . . . . 346

clear exception log . . . . . 349
clear log . . . . . 350
clear log buffered . . . . . 351
clear log external . . . . . 352
clear log permanent . . . . . 353
connection-log events . . . . . 354
copy buffered-log . . . . . 355
copy permanent-log . . . . . 356
default log buffered . . . . . 357
default log console . . . . . 358
default log email . . . . . 359
default log external . . . . . 360
default log host . . . . . 361
default log monitor . . . . . 362
default log permanent . . . . . 363
log buffered . . . . . 364
log buffered (filter) . . . . . 365
log buffered exclude . . . . . 368
log buffered size . . . . . 371
log console . . . . . 372
log console (filter) . . . . . 373
log console exclude . . . . . 376
log date-format . . . . . 379
log email . . . . . 380
log email (filter) . . . . . 381
log email exclude . . . . . 384
log email time . . . . . 387
log external . . . . . 389
log external (filter) . . . . . 391
log external exclude . . . . . 394
log external rotate . . . . . 397
log external size . . . . . 399
log facility . . . . . 400
log host . . . . . 402
log host (filter) . . . . . 404
log host exclude . . . . . 407
log host source . . . . . 410
log host startup-delay . . . . . 411
log host time . . . . . 413
log monitor (filter) . . . . . 415
log monitor exclude . . . . . 418
log permanent . . . . . 421
log permanent (filter) . . . . . 422
log permanent exclude . . . . . 425
log permanent size . . . . . 428
log-rate-limit nsm . . . . . 429
log trustpoint . . . . . 430
log url-requests . . . . . 431
show connection-log events . . . . . 432
show counter log . . . . . 433
show exception log . . . . . 434
show log . . . . . 435
show log config . . . . . 437

show log external . . . . . 439
show log permanent . . . . . 440
show running-config log . . . . . 441
unmount . . . . . 442

**Chapter 11: Scripting Commands . . . . . 443**
Introduction . . . . . 443
activate . . . . . 444
echo . . . . . 445
wait . . . . . 446

**Chapter 12: Interface Commands . . . . . 447**
Introduction . . . . . 447
description (interface) . . . . . 448
interface (to configure) . . . . . 449
ip tcp adjust-mss . . . . . 451
ipv6 tcp adjust-mss . . . . . 453
mru jumbo . . . . . 455
mtu . . . . . 456
service statistics interfaces counter . . . . . 458
show interface . . . . . 459
show interface brief . . . . . 463
show interface memory . . . . . 464
show interface status . . . . . 466
shutdown . . . . . 468

**Chapter 13: USB Cellular Modem Commands . . . . . 469**
Introduction . . . . . 469
apn . . . . . 470
chat-script . . . . . 472
cid . . . . . 473
encapsulation ppp . . . . . 474
show cellular . . . . . 476
show system usb . . . . . 479
usb mode-switch . . . . . 481

**Chapter 14: Port Mirroring Commands . . . . . 483**
Introduction . . . . . 483
mirror interface . . . . . 484
show mirror . . . . . 486
show mirror interface . . . . . 487

**PART 2: Interfaces and Layer 2 . . . . . 488**

**Chapter 15: Switching Commands . . . . . 489**
Introduction . . . . . 489
backpressure . . . . . 491
clear mac address-table dynamic . . . . . 493
clear mac address-table static . . . . . 494
clear port counter . . . . . 495
cut-through . . . . . 496

debug platform packet . . . . . 497
duplex . . . . . 499
flowcontrol (switch port) . . . . . 500
linkflap action . . . . . 502
mac address-table acquire . . . . . 503
mac address-table ageing-time . . . . . 504
mac address-table static . . . . . 505
platform multicast-ratelimit . . . . . 506
polarity . . . . . 507
show debugging platform packet . . . . . 508
show flowcontrol interface . . . . . 509
show interface err-disabled . . . . . 510
show interface switchport . . . . . 511
show mac address-table . . . . . 512
show platform . . . . . 514
show platform port . . . . . 516
show storm-control . . . . . 518
speed . . . . . 519
storm-control level . . . . . 521
undebug platform packet . . . . . 522

**Chapter 16: Bridging Commands . . . . . 523**
Introduction . . . . . 523
ageing-time . . . . . 525
bridge . . . . . 526
bridge-group . . . . . 527
clear mac-filter counter . . . . . 529
default-action . . . . . 530
default-protocol-action . . . . . 532
l3-filtering enable . . . . . 533
mac-filter-group egress . . . . . 534
mac-filter . . . . . 535
mac-filter-group . . . . . 536
mac-learning . . . . . 537
protocol ethii (macfilter) . . . . . 538
protocol novell (macfilter) . . . . . 540
protocol sap (macfilter) . . . . . 542
protocol snap (macfilter) . . . . . 544
rule (macfilter) . . . . . 546
rule ip (macfilter) . . . . . 548
rule ipv6 (macfilter) . . . . . 550
show bridge . . . . . 552
show bridge macaddr . . . . . 554
show mac-filter . . . . . 555

**Chapter 17: VLAN Commands . . . . . 557**
Introduction . . . . . 557
show vlan . . . . . 558
switchport access vlan . . . . . 559
switchport mode access . . . . . 560
switchport mode trunk . . . . . 561
switchport trunk allowed vlan . . . . . 562

switchport trunk native vlan . . . . . 565
switchport voice dscp . . . . . 566
switchport voice vlan . . . . . 567
switchport voice vlan priority . . . . . 569
vlan . . . . . 570
vlan database . . . . . 572

**Chapter 18: Spanning Tree Commands . . . . . 573**
Introduction . . . . . 573
clear spanning-tree statistics . . . . . 575
clear spanning-tree detected protocols (RSTP and MSTP) . . . . . 576
debug mstp (RSTP and STP) . . . . . 577
instance priority (MSTP) . . . . . 581
instance vlan (MSTP) . . . . . 583
region (MSTP) . . . . . 585
revision (MSTP) . . . . . 586
show debugging mstp . . . . . 587
show spanning-tree . . . . . 588
show spanning-tree brief . . . . . 591
show spanning-tree mst . . . . . 592
show spanning-tree mst config . . . . . 593
show spanning-tree mst detail . . . . . 594
show spanning-tree mst detail interface . . . . . 596
show spanning-tree mst instance . . . . . 598
show spanning-tree mst instance interface . . . . . 599
show spanning-tree mst interface . . . . . 600
show spanning-tree statistics . . . . . 601
show spanning-tree statistics instance . . . . . 603
show spanning-tree statistics instance interface . . . . . 604
show spanning-tree statistics interface . . . . . 606
show spanning-tree vlan range-index . . . . . 608
spanning-tree autoedge (RSTP and MSTP) . . . . . 609
spanning-tree cisco-interoperability (MSTP) . . . . . 610
spanning-tree edgeport (RSTP and MSTP) . . . . . 611
spanning-tree enable . . . . . 612
spanning-tree errdisable-timeout enable . . . . . 614
spanning-tree errdisable-timeout interval . . . . . 615
spanning-tree force-version . . . . . 616
spanning-tree forward-time . . . . . 617
spanning-tree guard root . . . . . 618
spanning-tree hello-time . . . . . 619
spanning-tree link-type . . . . . 620
spanning-tree max-age . . . . . 621
spanning-tree max-hops (MSTP) . . . . . 622
spanning-tree mode . . . . . 623
spanning-tree mst configuration . . . . . 624
spanning-tree mst instance . . . . . 625
spanning-tree mst instance path-cost . . . . . 626
spanning-tree mst instance priority . . . . . 628
spanning-tree mst instance restricted-role . . . . . 629
spanning-tree mst instance restricted-tcn . . . . . 631
spanning-tree path-cost . . . . . 632
spanning-tree portfast (STP) . . . . . 633

spanning-tree portfast bpdu-filter . . . . . 635
spanning-tree portfast bpdu-guard . . . . . 637
spanning-tree priority (bridge priority) . . . . . 639
spanning-tree priority (port priority) . . . . . 640
spanning-tree restricted-role . . . . . 641
spanning-tree restricted-tcn . . . . . 642
spanning-tree transmit-holdcount . . . . . 643
undebug mstp . . . . . 644

**Chapter 19: Link Aggregation Commands . . . . . 645**
Introduction . . . . . 645
channel-group . . . . . 647
clear lacp counters . . . . . 649
debug lacp . . . . . 650
lacp global-passive-mode enable . . . . . 651
lacp port-priority . . . . . 652
lacp system-priority . . . . . 653
lacp timeout . . . . . 654
show debugging lacp . . . . . 656
show diagnostic channel-group . . . . . 657
show etherchannel . . . . . 658
show etherchannel detail . . . . . 659
show etherchannel summary . . . . . 660
show lacp sys-id . . . . . 661
show lacp-counter . . . . . 662
show port etherchannel . . . . . 663
show static-channel-group . . . . . 664
static-channel-group . . . . . 665
undebug lacp . . . . . 667

**Chapter 20: 802.1Q Encapsulation Commands . . . . . 668**
Introduction . . . . . 668
encapsulation dot1q . . . . . 669

**Chapter 21: PPP Commands . . . . . 671**
Introduction . . . . . 671
debug ppp . . . . . 673
encapsulation ppp . . . . . 676
interface (PPP) . . . . . 678
ip address negotiated . . . . . 679
ip tcp adjust-mss . . . . . 681
ip unnumbered . . . . . 683
ipv6 tcp adjust-mss . . . . . 685
keepalive (PPP) . . . . . 687
mtu (PPP) . . . . . 689
peer default ip address . . . . . 690
peer neighbor-route . . . . . 692
ppp authentication . . . . . 694
ppp authentication refuse . . . . . 696
ppp hostname . . . . . 698
ppp ipcp dns . . . . . 700
ppp ipcp dns suffix-list . . . . . 702

ppp ipcp ip-override . . . . . 704
ppp password . . . . . 705
ppp service-name (PPPoE) . . . . . 706
ppp timeout idle . . . . . 707
ppp username . . . . . 708
show debugging ppp . . . . . 709
show interface (PPP) . . . . . 710
undebug ppp . . . . . 714

**Chapter 22: PPP over Ethernet (PPPoE) Commands . . . . . 715**
Introduction . . . . . 715
clear pppoe-ac statistics . . . . . 717
client (pppoe-relay) . . . . . 718
debug pppoe-ac . . . . . 719
destination l2tp . . . . . 720
l2tp peer-address dns-lookup . . . . . 721
l2tp peer-address radius-lookup group . . . . . 723
l2tp peer-address static . . . . . 724
l2tp profile . . . . . 726
max-sessions . . . . . 728
ppp-auth-protocol . . . . . 729
pppoe-ac . . . . . 730
pppoe-ac-service . . . . . 731
pppoe-relay . . . . . 732
proxy-auth . . . . . 733
server (pppoe-relay) . . . . . 734
service-name . . . . . 735
show debugging pppoe ac . . . . . 737
show pppoe-ac config-check . . . . . 738
show pppoe-ac connections . . . . . 740
show pppoe-ac statistics . . . . . 742
show running-config pppoe-ac . . . . . 745
show running-config pppoe-relay . . . . . 746
timeout (pppoe-relay) . . . . . 747

**PART 3: Routing . . . . . 748**

**Chapter 23: IP Addressing and Protocol Commands . . . . . 749**
Introduction . . . . . 749
arp-aging-timeout . . . . . 751
arp . . . . . 752
arp log . . . . . 754
arp opportunistic-nd . . . . . 757
arp-reply-bc-dmac . . . . . 759
clear arp-cache . . . . . 760
debug ip packet interface . . . . . 762
ip address (IP Addressing and Protocol) . . . . . 764
ip directed-broadcast . . . . . 766
ip forwarding . . . . . 768
ip forward-protocol udp . . . . . 769
ip gratuitous-arp-link . . . . . 771
ip helper-address . . . . . 773

ip icmp error-interval . . . . . 775
ip limited-local-proxy-arp . . . . . 776
ip local-proxy-arp . . . . . 778
ip proxy-arp . . . . . 779
ip redirects . . . . . 780
ip tcp synack-retries . . . . . 781
ip tcp timeout established . . . . . 782
ip unreachables . . . . . 783
local-proxy-arp . . . . . 785
optimistic-nd . . . . . 786
ping . . . . . 787
show arp . . . . . 789
show debugging ip packet . . . . . 791
show ip flooding-nexthops . . . . . 792
show ip forwarding . . . . . 793
show ip interface . . . . . 794
show ip interface vrf . . . . . 795
show ip sockets . . . . . 797
show ip traffic . . . . . 800
tcpdump . . . . . 802
traceroute . . . . . 803
undebug ip packet interface . . . . . 804

**Chapter 24: Domain Name Service (DNS) Commands . . . . . 805**

Introduction . . . . . 805
accept-invalid-sslcert . . . . . 807
clear ip dns forwarding cache . . . . . 808
ddns enable . . . . . 809
ddns-update-method . . . . . 810
ddns-update now . . . . . 811
debug ddns . . . . . 812
debug ip dns forwarding . . . . . 813
description (Domain List) . . . . . 814
domain (Domain List) . . . . . 815
host-name (DDNS) . . . . . 816
ip ddns-update-method . . . . . 817
ip dns forwarding . . . . . 818
ip dns forwarding cache . . . . . 819
ip dns forwarding dead-time . . . . . 821
ip dns forwarding domain-list . . . . . 822
ip dns forwarding retry . . . . . 823
ip dns forwarding source-interface . . . . . 824
ip dns forwarding timeout . . . . . 825
ip domain-list . . . . . 826
ip domain-lookup . . . . . 827
ip domain-name . . . . . 829
ip name-server . . . . . 830
ip name-server preferred-order . . . . . 832
ipv6 ddns-update-method . . . . . 833
password (DDNS) . . . . . 834
ppp ipcp dns . . . . . 835
ppp ipcp dns suffix-list . . . . . 837
retry-interval (DDNS) . . . . . 839

show ddns-update-method status . . . . . 840
show debugging ip dns forwarding . . . . . 841
show hosts . . . . . 842
show ip dns forwarding . . . . . 843
show ip dns forwarding cache . . . . . 844
show ip dns forwarding server . . . . . 846
show ip domain-list . . . . . 848
show ip domain-name . . . . . 849
show ip name-server . . . . . 850
suppress-ipv4-updates (DDNS) . . . . . 852
undebug (DDNS) . . . . . 853
update-interval (DDNS) . . . . . 854
update-url (DDNS) . . . . . 855
use-ipv4-for-ipv6-updates (DDNS) . . . . . 858
username (DDNS) . . . . . 859

**Chapter 25: IPv6 Commands . . . . . 860**
Introduction . . . . . 860
clear ipv6 neighbors . . . . . 862
ipv6 address . . . . . 863
ipv6 address autoconfig . . . . . 865
ipv6 address suffix . . . . . 867
ipv6 enable . . . . . 868
ipv6 eui64-linklocal . . . . . 870
ipv6 forwarding . . . . . 871
ipv6 icmp error-interval . . . . . 872
ipv6 multicast forward-slow-path-packet . . . . . 873
ipv6 multihoming . . . . . 874
ipv6 nd accept-ra-default-routes . . . . . 875
ipv6 nd accept-ra-pinfo . . . . . 876
ipv6 nd current-hoplimit . . . . . 877
ipv6 nd managed-config-flag . . . . . 879
ipv6 nd minimum-ra-interval . . . . . 880
ipv6 nd other-config-flag . . . . . 882
ipv6 nd prefix . . . . . 883
ipv6 nd proxy interface . . . . . 885
ipv6 nd ra-interval . . . . . 887
ipv6 nd ra-lifetime . . . . . 888
ipv6 nd reachable-time . . . . . 889
ipv6 nd retransmission-time . . . . . 891
ipv6 nd suppress-ra . . . . . 893
ipv6 neighbor . . . . . 894
ipv6 opportunistic-nd . . . . . 895
ipv6 route . . . . . 896
ipv6 unreachables . . . . . 898
optimistic-nd . . . . . 899
ping ipv6 . . . . . 900
show ipv6 forwarding . . . . . 902
show ipv6 interface . . . . . 903
show ipv6 neighbors . . . . . 904
show ipv6 route . . . . . 905
show ipv6 route summary . . . . . 907
traceroute ipv6 . . . . . 908

**Chapter 26: Routing Commands . . . . . 909**
Introduction . . . . . 909
ip route . . . . . 910
ipv6 route . . . . . 913
max-fib-routes . . . . . 915
max-static-routes . . . . . 917
maximum-paths . . . . . 918
show ip route . . . . . 919
show ip route database . . . . . 922
show ip route summary . . . . . 925
show ipv6 route . . . . . 927
show ipv6 route summary . . . . . 929

**Chapter 27: RIP Commands . . . . . 930**
Introduction . . . . . 930
accept-lifetime . . . . . 932
address-family ipv4 (RIP) . . . . . 934
alliedware-behavior . . . . . 935
cisco-metric-behavior (RIP) . . . . . 937
clear ip rip route . . . . . 938
debug rip . . . . . 940
default-information originate (RIP) . . . . . 941
default-metric (RIP) . . . . . 942
distance (RIP) . . . . . 943
distribute-list (RIP) . . . . . 944
fullupdate (RIP) . . . . . 945
ip summary-address rip . . . . . 946
ip prefix-list . . . . . 947
ip rip authentication key-chain . . . . . 949
ip rip authentication mode . . . . . 951
ip rip authentication string . . . . . 954
ip rip receive-packet . . . . . 956
ip rip receive version . . . . . 957
ip rip send-packet . . . . . 958
ip rip send version . . . . . 959
ip rip send version 1-compatible . . . . . 962
ip rip split-horizon . . . . . 964
key . . . . . 965
key chain . . . . . 966
key-string . . . . . 967
maximum-prefix . . . . . 968
neighbor (RIP) . . . . . 969
network (RIP) . . . . . 970
passive-interface (RIP) . . . . . 972
recv-buffer-size (RIP) . . . . . 973
redistribute (RIP) . . . . . 974
restart rip graceful . . . . . 976
rip restart grace-period . . . . . 977
route (RIP) . . . . . 978
router rip . . . . . 979
send-lifetime . . . . . 980
show debugging rip . . . . . 982

show ip prefix-list . . . . . 983
show ip protocols rip . . . . . 984
show ip rip . . . . . 985
show ip rip database . . . . . 986
show ip rip interface . . . . . 987
show ip rip vrf database . . . . . 988
show ip rip vrf interface . . . . . 989
timers (RIP) . . . . . 990
undebug rip . . . . . 992
version (RIP) . . . . . 993

**Chapter 28: RIPng for IPv6 Commands . . . . . 995**
Introduction . . . . . 995
aggregate-address (IPv6 RIPng) . . . . . 997
clear ipv6 rip route . . . . . 998
debug ipv6 rip . . . . . 999
default-information originate (IPv6 RIPng) . . . . . 1000
default-metric (IPv6 RIPng) . . . . . 1001
distribute-list (IPv6 RIPng) . . . . . 1002
ipv6 prefix-list . . . . . 1003
ipv6 rip metric-offset . . . . . 1005
ipv6 rip split-horizon . . . . . 1007
ipv6 router rip . . . . . 1009
neighbor (IPv6 RIPng) . . . . . 1010
passive-interface (IPv6 RIPng) . . . . . 1011
recv-buffer-size (IPv6 RIPng) . . . . . 1012
redistribute (IPv6 RIPng) . . . . . 1013
route (IPv6 RIPng) . . . . . 1014
router ipv6 rip . . . . . 1015
show debugging ipv6 rip . . . . . 1016
show ipv6 prefix-list . . . . . 1017
show ipv6 protocols rip . . . . . 1018
show ipv6 rip . . . . . 1019
show ipv6 rip database . . . . . 1020
show ipv6 rip interface . . . . . 1021
timers (IPv6 RIPng) . . . . . 1022
undebug ipv6 rip . . . . . 1023

**Chapter 29: OSPF Commands . . . . . 1024**
Introduction . . . . . 1024
area default-cost . . . . . 1027
area authentication . . . . . 1028
area filter-list . . . . . 1029
area nssa . . . . . 1030
area range . . . . . 1032
area stub . . . . . 1034
area virtual-link . . . . . 1035
auto-cost reference bandwidth . . . . . 1038
bandwidth . . . . . 1040
capability opaque . . . . . 1041
capability restart . . . . . 1042
clear ip ospf process . . . . . 1043

compatible rfc1583 . . . . . 1044
debug ospf events . . . . . 1045
debug ospf ifsm . . . . . 1046
debug ospf lsa . . . . . 1047
debug ospf nfsm . . . . . 1048
debug ospf nsm . . . . . 1049
debug ospf packet . . . . . 1050
debug ospf route . . . . . 1051
default-information originate . . . . . 1052
default-metric (OSPF) . . . . . 1053
distance (OSPF) . . . . . 1054
distribute-list (OSPF) . . . . . 1056
enable db-summary-opt . . . . . 1058
host area . . . . . 1059
ip ospf authentication . . . . . 1060
ip ospf authentication-key . . . . . 1061
ip ospf cost . . . . . 1063
ip ospf database-filter . . . . . 1064
ip ospf dead-interval . . . . . 1065
ip ospf disable all . . . . . 1066
ip ospf hello-interval . . . . . 1067
ip ospf message-digest-key . . . . . 1068
ip ospf mtu . . . . . 1070
ip ospf mtu-ignore . . . . . 1071
ip ospf network . . . . . 1072
ip ospf priority . . . . . 1073
ip ospf resync-timeout . . . . . 1074
ip ospf retransmit-interval . . . . . 1075
ip ospf transmit-delay . . . . . 1076
max-concurrent-dd . . . . . 1077
maximum-area . . . . . 1078
neighbor (OSPF) . . . . . 1079
network area . . . . . 1080
ospf abr-type . . . . . 1082
ospf restart grace-period . . . . . 1083
ospf restart helper . . . . . 1084
ospf router-id . . . . . 1086
overflow database . . . . . 1087
overflow database external . . . . . 1088
passive-interface (OSPF) . . . . . 1089
redistribute (OSPF) . . . . . 1090
restart ospf graceful . . . . . 1092
router ospf . . . . . 1093
router-id . . . . . 1095
show debugging ospf . . . . . 1096
show ip ospf . . . . . 1097
show ip ospf border-routers . . . . . 1100
show ip ospf database . . . . . 1101
show ip ospf database asbr-summary . . . . . 1103
show ip ospf database external . . . . . 1104
show ip ospf database network . . . . . 1106
show ip ospf database nssa-external . . . . . 1107
show ip ospf database opaque-area . . . . . 1109

show ip ospf database opaque-as . . . . . 1110
show ip ospf database opaque-link . . . . . 1111
show ip ospf database router . . . . . 1112
show ip ospf database summary . . . . . 1114
show ip ospf interface . . . . . 1117
show ip ospf neighbor . . . . . 1118
show ip ospf route . . . . . 1120
show ip ospf virtual-links . . . . . 1121
show ip protocols ospf . . . . . 1122
summary-address . . . . . 1123
timers spf exp . . . . . 1124
undebug ospf events . . . . . 1125
undebug ospf ifsm . . . . . 1126
undebug ospf lsa . . . . . 1127
undebug ospf nfsm . . . . . 1128
undebug ospf nsm . . . . . 1129
undebug ospf packet . . . . . 1130
undebug ospf route . . . . . 1131

**Chapter 30: OSPFv3 for IPv6 Commands . . . . . 1132**
Introduction . . . . . 1132
abr-type . . . . . 1135
area authentication ipsec spi . . . . . 1136
area default-cost (IPv6 OSPF) . . . . . 1138
area encryption ipsec spi esp . . . . . 1139
area range (IPv6 OSPF) . . . . . 1142
area stub (IPv6 OSPF) . . . . . 1144
area virtual-link (IPv6 OSPF) . . . . . 1145
area virtual-link authentication ipsec spi . . . . . 1147
area virtual-link encryption ipsec spi . . . . . 1149
auto-cost reference bandwidth (IPv6 OSPF) . . . . . 1152
bandwidth . . . . . 1154
clear ipv6 ospf process . . . . . 1155
debug ipv6 ospf events . . . . . 1156
debug ipv6 ospf ifsm . . . . . 1157
debug ipv6 ospf lsa . . . . . 1158
debug ipv6 ospf nfsm . . . . . 1159
debug ipv6 ospf packet . . . . . 1160
debug ipv6 ospf route . . . . . 1161
default-information originate . . . . . 1162
default-metric (IPv6 OSPF) . . . . . 1163
distance (IPv6 OSPF) . . . . . 1164
ipv6 ospf authentication spi . . . . . 1166
ipv6 ospf cost . . . . . 1168
ipv6 ospf dead-interval . . . . . 1170
ipv6 ospf display route single-line . . . . . 1171
ipv6 ospf encryption spi esp . . . . . 1172
ipv6 ospf hello-interval . . . . . 1175
ipv6 ospf neighbor . . . . . 1176
ipv6 ospf network . . . . . 1178
ipv6 ospf priority . . . . . 1179
ipv6 ospf retransmit-interval . . . . . 1180
ipv6 ospf transmit-delay . . . . . 1181

ipv6 router ospf area . . . . . 1182
max-concurrent-dd (IPv6 OSPF) . . . . . 1184
passive-interface (IPv6 OSPF) . . . . . 1185
redistribute (IPv6 OSPF) . . . . . 1186
restart ipv6 ospf graceful . . . . . 1188
router ipv6 ospf . . . . . 1189
router-id (IPv6 OSPF) . . . . . 1190
show debugging ipv6 ospf . . . . . 1191
show ipv6 ospf . . . . . 1192
show ipv6 ospf database . . . . . 1194
show ipv6 ospf database external . . . . . 1196
show ipv6 ospf database grace . . . . . 1197
show ipv6 ospf database inter-prefix . . . . . 1198
show ipv6 ospf database inter-router . . . . . 1199
show ipv6 ospf database intra-prefix . . . . . 1200
show ipv6 ospf database link . . . . . 1201
show ipv6 ospf database network . . . . . 1202
show ipv6 ospf database router . . . . . 1204
show ipv6 ospf interface . . . . . 1209
show ipv6 ospf neighbor . . . . . 1211
show ipv6 ospf route . . . . . 1213
show ipv6 ospf virtual-links . . . . . 1215
summary-address (IPv6 OSPF) . . . . . 1216
timers spf exp (IPv6 OSPF) . . . . . 1218
undebug ipv6 ospf events . . . . . 1219
undebug ipv6 ospf ifsm . . . . . 1220
undebug ipv6 ospf lsa . . . . . 1221
undebug ipv6 ospf nfsm . . . . . 1222
undebug ipv6 ospf packet . . . . . 1223
undebug ipv6 ospf route . . . . . 1224

**Chapter 31: BGP and BGP4+ Commands . . . . . 1225**
Introduction . . . . . 1225
address-family . . . . . 1231
aggregate-address . . . . . 1233
auto-summary (BGP only) . . . . . 1236
bgp aggregate-nexthop-check . . . . . 1238
bgp always-compare-med . . . . . 1239
bgp bestpath as-path ignore . . . . . 1241
bgp bestpath compare-confed-aspath . . . . . 1242
bgp bestpath compare-routerid . . . . . 1243
bgp bestpath med . . . . . 1244
bgp bestpath med remove-recv-med . . . . . 1246
bgp bestpath med remove-send-med . . . . . 1247
bgp client-to-client reflection . . . . . 1248
bgp cluster-id . . . . . 1249
bgp confederation identifier . . . . . 1251
bgp confederation peers . . . . . 1252
bgp config-type . . . . . 1254
bgp dampening . . . . . 1256
bgp damp-peer-oscillation (BGP only) . . . . . 1258
bgp default ipv4-unicast . . . . . 1259
bgp default local-preference (BGP only) . . . . . 1260

bgp deterministic-med . . . . . 1261
bgp enforce-first-as . . . . . 1263
bgp fast-external-failover . . . . . 1264
bgp graceful-restart . . . . . 1265
bgp graceful-restart graceful-reset . . . . . 1267
bgp log-neighbor-changes . . . . . 1268
bgp memory maxallocation . . . . . 1270
bgp nexthop-trigger-count . . . . . 1271
bgp nexthop-trigger delay . . . . . 1272
bgp nexthop-trigger enable . . . . . 1273
bgp rfc1771-path-select (BGP only) . . . . . 1274
bgp rfc1771-strict (BGP only) . . . . . 1275
bgp router-id . . . . . 1276
bgp scan-time (BGP only) . . . . . 1278
bgp update-delay . . . . . 1279
clear bgp * . . . . . 1280
clear bgp (IPv4 or IPv6 address) . . . . . 1281
clear bgp (ASN) . . . . . 1283
clear bgp external . . . . . 1284
clear bgp peer-group . . . . . 1285
clear bgp ipv6 (ipv6 address) (BGP4+ only) . . . . . 1286
clear bgp ipv6 dampening (BGP4+ only) . . . . . 1287
clear bgp ipv6 flap-statistics (BGP4+ only) . . . . . 1288
clear bgp ipv6 (ASN) (BGP4+ only) . . . . . 1289
clear bgp ipv6 external (BGP4+ only) . . . . . 1290
clear bgp ipv6 peer-group (BGP4+ only) . . . . . 1291
clear ip bgp * (BGP only) . . . . . 1292
clear ip bgp (IPv4) (BGP only) . . . . . 1294
clear ip bgp dampening (BGP only) . . . . . 1296
clear ip bgp flap-statistics (BGP only) . . . . . 1297
clear ip bgp (ASN) (BGP only) . . . . . 1298
clear ip bgp external (BGP only) . . . . . 1299
clear ip bgp peer-group (BGP only) . . . . . 1300
clear ip prefix-list . . . . . 1301
debug bgp (BGP only) . . . . . 1302
distance (BGP and BGP4+) . . . . . 1304
exit-address-family . . . . . 1306
ip community-list . . . . . 1307
ip community-list expanded . . . . . 1309
ip community-list standard . . . . . 1311
ip extcommunity-list expanded . . . . . 1313
ip extcommunity-list standard . . . . . 1315
ip prefix-list . . . . . 1317
ipv6 prefix-list . . . . . 1319
match as-path . . . . . 1321
match community . . . . . 1322
max-paths . . . . . 1324
neighbor activate . . . . . 1325
neighbor advertisement-interval . . . . . 1328
neighbor allowas-in . . . . . 1331
neighbor as-origination-interval . . . . . 1334
neighbor attribute-unchanged . . . . . 1336
neighbor capability graceful-restart . . . . . 1339

neighbor capability orf prefix-list . . . . . 1342
neighbor capability route-refresh . . . . . 1345
neighbor collide-established . . . . . 1348
neighbor default-originate . . . . . 1351
neighbor description . . . . . 1354
neighbor disallow-infinite-holdtime . . . . . 1357
neighbor dont-capability-negotiate . . . . . 1359
neighbor ebgp-multihop . . . . . 1362
neighbor enforce-multihop . . . . . 1365
neighbor filter-list . . . . . 1368
neighbor interface . . . . . 1371
neighbor local-as . . . . . 1372
neighbor maximum-prefix . . . . . 1375
neighbor next-hop-self . . . . . 1378
neighbor override-capability . . . . . 1381
neighbor passive . . . . . 1383
neighbor password . . . . . 1386
neighbor peer-group (add a neighbor) . . . . . 1390
neighbor peer-group (create a peer-group) . . . . . 1392
neighbor port . . . . . 1393
neighbor prefix-list . . . . . 1396
neighbor remote-as . . . . . 1399
neighbor remove-private-AS (BGP only) . . . . . 1402
neighbor restart-time . . . . . 1404
neighbor route-map . . . . . 1407
neighbor route-reflector-client (BGP only) . . . . . 1411
neighbor route-server-client (BGP only) . . . . . 1413
neighbor send-community . . . . . 1414
neighbor shutdown . . . . . 1418
neighbor soft-reconfiguration inbound . . . . . 1420
neighbor timers . . . . . 1423
neighbor transparent-as . . . . . 1426
neighbor transparent-nexthop . . . . . 1428
neighbor unsuppress-map . . . . . 1430
neighbor update-source . . . . . 1433
neighbor version (BGP only) . . . . . 1437
neighbor weight . . . . . 1439
network (BGP and BGP4+) . . . . . 1442
network synchronization . . . . . 1445
redistribute (into BGP or BGP4+) . . . . . 1446
restart bgp graceful (BGP only) . . . . . 1448
router bgp . . . . . 1449
route-map . . . . . 1450
set as-path . . . . . 1453
set community . . . . . 1454
show bgp ipv6 (BGP4+ only) . . . . . 1456
show bgp ipv6 community (BGP4+ only) . . . . . 1457
show bgp ipv6 community-list (BGP4+ only) . . . . . 1459
show bgp ipv6 dampening (BGP4+ only) . . . . . 1460
show bgp ipv6 filter-list (BGP4+ only) . . . . . 1461
show bgp ipv6 inconsistent-as (BGP4+ only) . . . . . 1462
show bgp ipv6 longer-prefixes (BGP4+ only) . . . . . 1463
show bgp ipv6 neighbors (BGP4+ only) . . . . . 1464

show bgp ipv6 paths (BGP4+ only) . . . . . 1467
show bgp ipv6 prefix-list (BGP4+ only) . . . . . 1468
show bgp ipv6 quote-regexp (BGP4+ only) . . . . . 1469
show bgp ipv6 regexp (BGP4+ only) . . . . . 1470
show bgp ipv6 route-map (BGP4+ only) . . . . . 1472
show bgp ipv6 summary (BGP4+ only) . . . . . 1473
show bgp memory maxallocation (BGP only) . . . . . 1474
show bgp nexthop-tracking (BGP only) . . . . . 1475
show bgp nexthop-tree-details (BGP only) . . . . . 1476
show debugging bgp (BGP only) . . . . . 1477
show ip bgp (BGP only) . . . . . 1478
show ip bgp attribute-info (BGP only) . . . . . 1479
show ip bgp cidr-only (BGP only) . . . . . 1480
show ip bgp community (BGP only) . . . . . 1481
show ip bgp community-info (BGP only) . . . . . 1483
show ip bgp community-list (BGP only) . . . . . 1484
show ip bgp dampening (BGP only) . . . . . 1485
show ip bgp filter-list (BGP only) . . . . . 1487
show ip bgp inconsistent-as (BGP only) . . . . . 1488
show ip bgp longer-prefixes (BGP only) . . . . . 1489
show ip bgp neighbors (BGP only) . . . . . 1490
show ip bgp neighbors connection-retrytime (BGP only) . . . . . 1493
show ip bgp neighbors hold-time (BGP only) . . . . . 1494
show ip bgp neighbors keepalive (BGP only) . . . . . 1495
show ip bgp neighbors keepalive-interval (BGP only) . . . . . 1496
show ip bgp neighbors notification (BGP only) . . . . . 1497
show ip bgp neighbors open (BGP only) . . . . . 1498
show ip bgp neighbors rcvd-msgs (BGP only) . . . . . 1499
show ip bgp neighbors sent-msgs (BGP only) . . . . . 1500
show ip bgp neighbors update (BGP only) . . . . . 1501
show ip bgp paths (BGP only) . . . . . 1502
show ip bgp prefix-list (BGP only) . . . . . 1503
show ip bgp quote-regexp (BGP only) . . . . . 1504
show ip bgp regexp (BGP only) . . . . . 1506
show ip bgp route-map (BGP only) . . . . . 1508
show ip bgp scan (BGP only) . . . . . 1509
show ip bgp summary (BGP only) . . . . . 1510
show ip community-list . . . . . 1512
show ip extcommunity-list . . . . . 1513
show ip prefix-list . . . . . 1514
show ipv6 prefix-list . . . . . 1515
show ip protocols bgp (BGP only) . . . . . 1516
show route-map . . . . . 1517
synchronization . . . . . 1518
timers (BGP) . . . . . 1520
undebug bgp (BGP only) . . . . . 1522

**Chapter 32: Route Map Commands . . . . . 1523**
Introduction . . . . . 1523
match as-path . . . . . 1525
match community . . . . . 1526
match interface . . . . . 1528
match ip address . . . . . 1529

match ip next-hop . . . . . 1531
match ipv6 address . . . . . 1533
match ipv6 next-hop . . . . . 1535
match metric . . . . . 1536
match origin . . . . . 1537
match route-type . . . . . 1539
match tag . . . . . 1540
route-map . . . . . 1541
set aggregator . . . . . 1544
set as-path . . . . . 1545
set atomic-aggregate . . . . . 1546
set comm-list delete . . . . . 1547
set community . . . . . 1548
set dampening . . . . . 1550
set extcommunity . . . . . 1552
set ip next-hop (route map) . . . . . 1554
set ipv6 next-hop . . . . . 1555
set local-preference . . . . . 1556
set metric . . . . . 1557
set metric-type . . . . . 1559
set origin . . . . . 1560
set originator-id . . . . . 1561
set tag . . . . . 1562
set weight . . . . . 1563
show route-map . . . . . 1564

**Chapter 33: Policy-based Routing Commands . . . . . 1565**

Introduction . . . . . 1565
application-decision . . . . . 1566
debug policy-based-routing . . . . . 1568
ip policy-route . . . . . 1569
ipv6 policy-route . . . . . 1571
policy-based-routing . . . . . 1573
policy-based-routing enable . . . . . 1574
show ip pbr route . . . . . 1575
show ipv6 pbr route . . . . . 1577
show pbr rules . . . . . 1579
show pbr rules brief . . . . . 1584

**Chapter 34: VRF-lite Commands . . . . . 1586**

Introduction . . . . . 1586
address-family . . . . . 1589
address-family ipv4 (RIP) . . . . . 1591
arp . . . . . 1592
arp opportunistic-nd . . . . . 1594
clear arp-cache . . . . . 1596
clear ip bgp * (BGP only) . . . . . 1598
clear ip bgp (IPv4) (BGP only) . . . . . 1600
clear ip rip route . . . . . 1602
crypto key pubkey-chain knownhosts . . . . . 1604
default-metric (RIP) . . . . . 1606
description (VRF) . . . . . 1607

distance (RIP) . . . . . 1608
distribute-list (RIP) . . . . . 1609
export map . . . . . 1610
fullupdate (RIP) . . . . . 1611
import map . . . . . 1612
ip route static inter-vrf . . . . . 1613
ip route . . . . . 1614
ip vrf . . . . . 1617
ip vrf forwarding . . . . . 1618
max-fib-routes (VRF) . . . . . 1619
max-static-routes (VRF) . . . . . 1621
neighbor next-hop-self . . . . . 1622
neighbor remote-as . . . . . 1625
neighbor password . . . . . 1628
network (RIP) . . . . . 1632
passive-interface (RIP) . . . . . 1634
ping . . . . . 1635
rd (route distinguisher) . . . . . 1637
redistribute (into BGP or BGP4+) . . . . . 1638
redistribute (OSPF) . . . . . 1640
redistribute (RIP) . . . . . 1642
route (RIP) . . . . . 1644
route-target . . . . . 1645
router ospf . . . . . 1647
router-id (VRF) . . . . . 1649
show arp . . . . . 1650
show crypto key pubkey-chain knownhosts . . . . . 1652
show ip bgp cidr-only (BGP only) . . . . . 1654
show ip bgp community (BGP only) . . . . . 1655
show ip bgp community-list (BGP only) . . . . . 1657
show ip bgp dampening (BGP only) . . . . . 1658
show ip bgp filter-list (BGP only) . . . . . 1660
show ip bgp inconsistent-as (BGP only) . . . . . 1661
show ip bgp longer-prefixes (BGP only) . . . . . 1662
show ip bgp prefix-list (BGP only) . . . . . 1663
show ip bgp quote-regexp (BGP only) . . . . . 1664
show ip bgp regexp (BGP only) . . . . . 1666
show ip bgp route-map (BGP only) . . . . . 1668
show ip bgp summary (BGP only) . . . . . 1669
show ip interface vrf . . . . . 1671
show ip rip vrf database . . . . . 1673
show ip rip vrf interface . . . . . 1674
show ip route . . . . . 1675
show ip route database . . . . . 1678
show ip route summary . . . . . 1681
show ip vrf . . . . . 1683
show ip vrf detail . . . . . 1684
show ip vrf interface . . . . . 1685
show running-config vrf . . . . . 1686
ssh . . . . . 1687
tcpdump . . . . . 1689
telnet . . . . . 1690
timers (RIP) . . . . . 1691

traceroute . . . . . 1693
version (RIP) . . . . . 1694

**Chapter 35: SD-WAN Commands . . . . . 1696**
Introduction . . . . . 1696
application-decision . . . . . 1698
consecutive probe loss . . . . . 1700
debug linkmon . . . . . 1702
destination (linkmon-probe) . . . . . 1704
dscp (linkmon-probe) . . . . . 1706
egress interface (linkmon-probe) . . . . . 1707
enable (linkmon-probe) . . . . . 1708
interval (linkmon-probe) . . . . . 1709
ip policy-route . . . . . 1710
ip-version (linkmon-probe) . . . . . 1712
ipv6 policy-route . . . . . 1713
jitter . . . . . 1715
latency . . . . . 1717
linkmon group . . . . . 1719
linkmon probe-history . . . . . 1720
linkmon probe . . . . . 1722
linkmon profile . . . . . 1724
load-balancing . . . . . 1725
member (linkmon-group) . . . . . 1726
pktloss . . . . . 1728
preference . . . . . 1730
sample-size (linkmon-probe) . . . . . 1732
show debugging linkmon . . . . . 1733
show linkmon probe . . . . . 1734
show linkmon probe-history . . . . . 1737
show pbr rules . . . . . 1739
show pbr rules brief . . . . . 1744
size (linkmon-probe) . . . . . 1746
source (linkmon-probe) . . . . . 1747
url (linkmon-probe) . . . . . 1748

**PART 4: Multicast Applications . . . . . 1749**

**Chapter 36: IGMP and IGMP Snooping Commands . . . . . 1750**
Introduction . . . . . 1750
clear ip igmp . . . . . 1752
clear ip igmp group . . . . . 1753
clear ip igmp interface . . . . . 1754
debug igmp . . . . . 1755
ip igmp . . . . . 1756
ip igmp flood specific-query . . . . . 1757
ip igmp last-member-query-count . . . . . 1758
ip igmp last-member-query-interval . . . . . 1759
ip igmp maximum-groups . . . . . 1760
ip igmp mroute-proxy . . . . . 1762
ip igmp proxy-service . . . . . 1763
ip igmp querier-timeout . . . . . 1765

ip igmp query-holdtime . . . . . 1766
ip igmp query-interval . . . . . 1768
ip igmp query-max-response-time . . . . . 1770
ip igmp ra-option . . . . . 1772
ip igmp robustness-variable . . . . . 1773
ip igmp snooping . . . . . 1774
ip igmp snooping fast-leave . . . . . 1775
ip igmp snooping mrouter . . . . . 1776
ip igmp snooping querier . . . . . 1777
ip igmp snooping report-suppression . . . . . 1778
ip igmp snooping routermode . . . . . 1779
ip igmp snooping source-timeout . . . . . 1781
ip igmp snooping tcn query solicit . . . . . 1782
ip igmp source-address-check . . . . . 1784
ip igmp startup-query-count . . . . . 1785
ip igmp startup-query-interval . . . . . 1786
ip igmp trusted . . . . . 1787
ip igmp version . . . . . 1788
show debugging igmp . . . . . 1789
show ip igmp groups . . . . . 1790
show ip igmp interface . . . . . 1792
show ip igmp proxy . . . . . 1794
show ip igmp proxy groups . . . . . 1795
show ip igmp snooping mrouter . . . . . 1797
show ip igmp snooping routermode . . . . . 1798
show ip igmp snooping source-timeout . . . . . 1799
show ip igmp snooping statistics . . . . . 1800
undebug igmp . . . . . 1802

**Chapter 37: MLD and MLD Snooping Commands . . . . . 1803**

Introduction . . . . . 1803
clear ipv6 mld . . . . . 1805
clear ipv6 mld group . . . . . 1806
clear ipv6 mld interface . . . . . 1807
debug mld . . . . . 1808
ipv6 mld . . . . . 1809
ipv6 mld last-member-query-count . . . . . 1810
ipv6 mld last-member-query-interval . . . . . 1811
ipv6 mld querier-timeout . . . . . 1812
ipv6 mld query-interval . . . . . 1813
ipv6 mld query-max-response-time . . . . . 1814
ipv6 mld robustness-variable . . . . . 1815
ipv6 mld snooping . . . . . 1816
ipv6 mld snooping fast-leave . . . . . 1818
ipv6 mld snooping mrouter . . . . . 1819
ipv6 mld snooping querier . . . . . 1821
ipv6 mld snooping report-suppression . . . . . 1822
ipv6 mld ssm-map enable . . . . . 1824
ipv6 mld static-group . . . . . 1825
ipv6 mld version . . . . . 1827
show debugging mld . . . . . 1828
show ipv6 mld groups . . . . . 1829
show ipv6 mld interface . . . . . 1830

show ipv6 mld snooping mrouter . . . . . 1831
show ipv6 mld snooping statistics . . . . . 1832

**Chapter 38: Multicast Commands . . . . . 1833**
Introduction . . . . . 1833
clear ip mroute . . . . . 1835
clear ip mroute statistics . . . . . 1836
clear ipv6 mroute . . . . . 1837
clear ipv6 mroute statistics . . . . . 1838
debug nsm . . . . . 1839
debug nsm mcast . . . . . 1840
debug nsm mcast6 . . . . . 1841
ip mroute . . . . . 1842
ip multicast route . . . . . 1844
ip multicast route-limit . . . . . 1846
ip multicast wrong-vif-suppression . . . . . 1847
ip multicast-routing . . . . . 1848
ipv6 mroute . . . . . 1849
ipv6 multicast route . . . . . 1851
ipv6 multicast route-limit . . . . . 1853
ipv6 multicast-routing . . . . . 1854
multicast . . . . . 1855
platform multicast-ratelimit . . . . . 1856
show debugging nsm mcast . . . . . 1857
show ip mroute . . . . . 1858
show ip mvif . . . . . 1861
show ip rpf . . . . . 1862
show ipv6 mroute . . . . . 1863
show ipv6 multicast forwarding . . . . . 1865
show ipv6 mif . . . . . 1866

**Chapter 39: PIM-SM Commands . . . . . 1867**
Introduction . . . . . 1867
clear ip pim sparse-mode bsr rp-set * . . . . . 1869
clear ip pim sparse-mode packet statistics . . . . . 1870
clear ip mroute pim sparse-mode . . . . . 1871
debug pim sparse-mode . . . . . 1872
debug pim sparse-mode timer . . . . . 1873
ip pim anycast-rp . . . . . 1875
ip pim bsr-border . . . . . 1876
ip pim bsr-candidate . . . . . 1877
ip pim cisco-register-checksum . . . . . 1878
ip pim crp-cisco-prefix . . . . . 1879
ip pim dr-priority . . . . . 1880
ip pim exclude-genid . . . . . 1881
ip pim ext-srcs-directly-connected . . . . . 1882
ip pim hello-holdtime (PIM-SM) . . . . . 1883
ip pim hello-interval (PIM-SM) . . . . . 1884
ip pim ignore-rp-set-priority . . . . . 1885
ip pim jp-timer . . . . . 1886
ip pim register-rate-limit . . . . . 1887
ip pim register-rp-reachability . . . . . 1888

ip pim register-source . . . . . 1889
ip pim register-suppression . . . . . 1890
ip pim rp-address . . . . . 1891
ip pim rp-candidate . . . . . 1893
ip pim rp-register-kat . . . . . 1894
ip pim sparse-mode . . . . . 1895
ip pim sparse-mode join-prune-batching . . . . . 1896
ip pim sparse-mode passive . . . . . 1898
ip pim sparse-mode wrong-vif-suppression . . . . . 1899
ip pim spt-threshold . . . . . 1901
ip pim ssm . . . . . 1902
service pim . . . . . 1903
show debugging pim sparse-mode . . . . . 1904
show ip pim sparse-mode bsr-router . . . . . 1905
show ip pim sparse-mode interface . . . . . 1906
show ip pim sparse-mode interface detail . . . . . 1908
show ip pim sparse-mode local-members . . . . . 1909
show ip pim sparse-mode mroute . . . . . 1910
show ip pim sparse-mode mroute detail . . . . . 1912
show ip pim sparse-mode neighbor . . . . . 1914
show ip pim sparse-mode nexthop . . . . . 1915
show ip pim sparse-mode packet statistics . . . . . 1916
show ip pim sparse-mode rp-hash . . . . . 1917
show ip pim sparse-mode rp mapping . . . . . 1918
undebug all pim sparse-mode . . . . . 1919

**Chapter 40: PIM-SMv6 Commands . . . . . 1920**

Introduction . . . . . 1920
clear ipv6 mroute pim . . . . . 1923
clear ipv6 mroute pim sparse-mode . . . . . 1924
clear ipv6 pim sparse-mode bsr rp-set * . . . . . 1925
debug ipv6 pim sparse-mode . . . . . 1926
debug ipv6 pim sparse-mode packet . . . . . 1928
debug ipv6 pim sparse-mode timer . . . . . 1929
ipv6 pim anycast-rp . . . . . 1931
ipv6 pim bsr-border . . . . . 1933
ipv6 pim bsr-candidate . . . . . 1935
ipv6 pim cisco-register-checksum . . . . . 1937
ipv6 pim crp-cisco-prefix . . . . . 1938
ipv6 pim dr-priority . . . . . 1939
ipv6 pim exclude-genid . . . . . 1941
ipv6 pim ext-srcs-directly-connected . . . . . 1942
ipv6 pim hello-holdtime . . . . . 1943
ipv6 pim hello-interval . . . . . 1944
ipv6 pim ignore-rp-set-priority . . . . . 1945
ipv6 pim jp-timer . . . . . 1946
ipv6 pim neighbor-filter . . . . . 1947
ipv6 pim register-rate-limit . . . . . 1948
ipv6 pim register-rp-reachability . . . . . 1949
ipv6 pim register-source . . . . . 1950
ipv6 pim register-suppression . . . . . 1951
ipv6 pim rp-address . . . . . 1952
ipv6 pim rp-candidate . . . . . 1954

ipv6 pim rp embedded . . . . . 1955
ipv6 pim rp-register-kat . . . . . 1956
ipv6 pim sparse-mode . . . . . 1957
ipv6 pim sparse-mode passive . . . . . 1958
ipv6 pim spt-threshold . . . . . 1959
ipv6 pim ssm . . . . . 1960
ipv6 pim unicast-bsm . . . . . 1961
service pim6 . . . . . 1962
show debugging ipv6 pim sparse-mode . . . . . 1963
show ipv6 pim sparse-mode bsr-router . . . . . 1964
show ipv6 pim sparse-mode interface . . . . . 1965
show ipv6 pim sparse-mode interface detail . . . . . 1967
show ipv6 pim sparse-mode local-members . . . . . 1968
show ipv6 pim sparse-mode mroute . . . . . 1970
show ipv6 pim sparse-mode mroute detail . . . . . 1972
show ipv6 pim sparse-mode neighbor . . . . . 1974
show ipv6 pim sparse-mode nexthop . . . . . 1975
show ipv6 pim sparse-mode rp-hash . . . . . 1976
show ipv6 pim sparse-mode rp mapping . . . . . 1977
show ipv6 pim sparse-mode rp nexthop . . . . . 1978
undebug all ipv6 pim sparse-mode . . . . . 1980
undebug ipv6 pim sparse-mode . . . . . 1981

**PART 5: Access and Security . . . . . 1983**

**Chapter 41: Traffic Control Commands . . . . . 1984**

Introduction . . . . . 1984
class (htb) . . . . . 1986
class (priority) . . . . . 1988
class (wrr) . . . . . 1990
debug traffic-control . . . . . 1992
interface (traffic-control) . . . . . 1993
l3-filtering enable . . . . . 1994
move rule (traffic-control) . . . . . 1995
policy (traffic-control) . . . . . 1996
red-curve . . . . . 1998
rule (traffic-control) . . . . . 2000
show debugging traffic-control . . . . . 2002
show running-config traffic-control . . . . . 2003
show traffic-control counters . . . . . 2005
show traffic-control interface . . . . . 2007
show traffic-control policy . . . . . 2009
show traffic-control red-curve . . . . . 2011
show traffic-control rule config-check . . . . . 2013
show traffic-control rule . . . . . 2014
show traffic-control . . . . . 2015
sub-class (htb) . . . . . 2016
sub-class (priority) . . . . . 2018
sub-class (wrr) . . . . . 2020
sub-sub-class (htb) . . . . . 2022
sub-sub-class (priority) . . . . . 2024
sub-sub-class (wrr) . . . . . 2026

traffic-control enable . . . . . 2028
traffic-control . . . . . 2029

**Chapter 42: 802.1X Commands . . . . . 2031**
Introduction . . . . . 2031
dot1x accounting . . . . . 2033
dot1x authentication . . . . . 2034
debug dot1x . . . . . 2035
dot1x control-direction . . . . . 2036
dot1x eap . . . . . 2038
dot1x eapol-version . . . . . 2039
dot1x initialize interface . . . . . 2040
dot1x initialize supplicant . . . . . 2041
dot1x keytransmit . . . . . 2042
dot1x max-auth-fail . . . . . 2043
dot1x max-reauth-req . . . . . 2045
dot1x port-control . . . . . 2047
dot1x timeout tx-period . . . . . 2049
show debugging dot1x . . . . . 2050
show dot1x . . . . . 2051
show dot1x diagnostics . . . . . 2054
show dot1x interface . . . . . 2056
show dot1x sessionstatistics . . . . . 2058
show dot1x statistics interface . . . . . 2059
show dot1x supplicant . . . . . 2060
show dot1x supplicant interface . . . . . 2062
undebug dot1x . . . . . 2064

**Chapter 43: Authentication Commands . . . . . 2065**
Introduction . . . . . 2065
auth auth-fail vlan . . . . . 2069
auth critical . . . . . 2071
auth dhcp-framed-ip-lease . . . . . 2072
auth dynamic-vlan-creation . . . . . 2074
auth guest-vlan . . . . . 2076
auth guest-vlan forward . . . . . 2078
auth host-mode . . . . . 2080
auth log . . . . . 2082
auth max-supplicant . . . . . 2084
auth multi-vlan-session . . . . . 2086
auth priority . . . . . 2087
auth profile (global) . . . . . 2089
auth profile (interface) . . . . . 2090
auth reauthentication . . . . . 2091
auth roaming disconnected . . . . . 2092
auth roaming enable . . . . . 2094
auth supplicant-ip . . . . . 2096
auth supplicant-mac . . . . . 2098
auth timeout connect-timeout . . . . . 2101
auth timeout quiet-period . . . . . 2103
auth timeout reauth-period . . . . . 2104
auth timeout server-timeout . . . . . 2106

auth timeout supp-timeout . . . . . 2108
auth two-step enable . . . . . 2109
auth two-step order . . . . . 2111
auth-mac accounting . . . . . 2113
auth-mac authentication . . . . . 2114
auth-mac enable . . . . . 2115
auth-mac method . . . . . 2117
auth-mac password . . . . . 2119
auth-mac reauth-relearning . . . . . 2120
auth-mac static . . . . . 2121
auth-mac username . . . . . 2122
auth-web accounting . . . . . 2123
auth-web authentication . . . . . 2124
auth-web enable . . . . . 2125
auth-web forward . . . . . 2127
auth-web idle-timeout enable . . . . . 2130
auth-web idle-timeout timeout . . . . . 2131
auth-web max-auth-fail . . . . . 2132
auth-web method . . . . . 2134
auth-web-server dhcp ipaddress . . . . . 2135
auth-web-server dhcp lease . . . . . 2136
auth-web-server dhcp-wpad-option . . . . . 2137
auth-web-server host-name . . . . . 2138
auth-web-server intercept-port . . . . . 2139
auth-web-server ipaddress . . . . . 2140
auth-web-server page language . . . . . 2141
auth-web-server login-url . . . . . 2142
auth-web-server page logo . . . . . 2143
auth-web-server page sub-title . . . . . 2144
auth-web-server page success-message . . . . . 2145
auth-web-server page title . . . . . 2146
auth-web-server page welcome-message . . . . . 2147
auth-web-server ping-poll enable . . . . . 2148
auth-web-server ping-poll failcount . . . . . 2149
auth-web-server ping-poll interval . . . . . 2150
auth-web-server ping-poll reauth-timer-refresh . . . . . 2151
auth-web-server ping-poll timeout . . . . . 2152
auth-web-server port . . . . . 2153
auth-web-server redirect-delay-time . . . . . 2154
auth-web-server redirect-url . . . . . 2155
auth-web-server session-keep . . . . . 2156
auth-web-server ssl . . . . . 2157
auth-web-server ssl intercept-port . . . . . 2158
copy proxy-autoconfig-file . . . . . 2159
copy web-auth-https-file . . . . . 2160
description (auth-profile) . . . . . 2161
erase proxy-autoconfig-file . . . . . 2162
erase web-auth-https-file . . . . . 2163
show auth . . . . . 2164
show auth diagnostics . . . . . 2165
show auth interface . . . . . 2166
show auth sessionstatistics . . . . . 2168
show auth statistics interface . . . . . 2169

show auth supplicant . . . . . 2170
show auth supplicant interface . . . . . 2173
show auth two-step supplicant brief . . . . . 2174
show auth-web-server . . . . . 2176
show auth-web-server page . . . . . 2177
show proxy-autoconfig-file . . . . . 2178

**Chapter 44: AAA Commands . . . . . 2179**
Introduction . . . . . 2179
aaa accounting auth-mac . . . . . 2181
aaa accounting auth-web . . . . . 2183
aaa accounting commands . . . . . 2185
aaa accounting dot1x . . . . . 2187
aaa accounting login . . . . . 2189
aaa accounting update . . . . . 2192
aaa authentication auth-mac . . . . . 2194
aaa authentication auth-web . . . . . 2196
aaa authentication dot1x . . . . . 2198
aaa authentication enable default group tacacs+ . . . . . 2200
aaa authentication enable default local . . . . . 2202
aaa authentication isakmp . . . . . 2203
aaa authentication login . . . . . 2204
aaa authentication openvpn . . . . . 2206
aaa authorization commands . . . . . 2207
aaa authorization config-commands . . . . . 2209
aaa group server . . . . . 2210
aaa local authentication attempts lockout-time . . . . . 2212
aaa local authentication attempts max-fail . . . . . 2213
aaa login fail-delay . . . . . 2214
accounting login . . . . . 2215
authorization commands . . . . . 2216
clear aaa local user lockout . . . . . 2218
debug aaa . . . . . 2219
login authentication . . . . . 2220
proxy-port . . . . . 2221
radius-secure-proxy aaa . . . . . 2222
server (radsecproxy-aaa) . . . . . 2223
server mutual-authentication . . . . . 2225
server name-check . . . . . 2226
server trustpoint . . . . . 2227
show aaa local user locked . . . . . 2229
show aaa server group . . . . . 2230
show debugging aaa . . . . . 2231
show radius server group . . . . . 2232
undebug aaa . . . . . 2234

**Chapter 45: RADIUS Commands . . . . . 2235**
Introduction . . . . . 2235
deadtime (RADIUS server group) . . . . . 2236
debug radius . . . . . 2237
ip radius source-interface . . . . . 2238
radius-server deadtime . . . . . 2239

radius-server host . . . . . 2240
radius-server key . . . . . 2243
radius-server retransmit . . . . . 2244
radius-server timeout . . . . . 2246
server (server group) . . . . . 2248
show debugging radius . . . . . 2250
show radius . . . . . 2251
undebug radius . . . . . 2254

**Chapter 46: Local RADIUS Server Commands . . . . . 2255**
Introduction . . . . . 2255
attribute . . . . . 2257
authentication . . . . . 2259
client (radsecproxy-srv) . . . . . 2260
client mutual-authentication . . . . . 2262
client name-check . . . . . 2263
client trustpoint . . . . . 2264
clear radius local-server statistics . . . . . 2265
copy fdb-radius-users (to file) . . . . . 2266
copy local-radius-user-db (from file) . . . . . 2268
copy local-radius-user-db (to file) . . . . . 2269
crypto pki enroll local (deleted) . . . . . 2270
crypto pki enroll local local-radius-all-users (deleted) . . . . . 2271
crypto pki enroll local user (deleted) . . . . . 2272
crypto pki export local pem (deleted) . . . . . 2273
crypto pki export local pkcs12 (deleted) . . . . . 2274
crypto pki trustpoint local (deleted) . . . . . 2275
debug crypto pki (deleted) . . . . . 2276
domain-style . . . . . 2277
egress-vlan-id . . . . . 2278
egress-vlan-name . . . . . 2279
group . . . . . 2280
nas . . . . . 2281
help radius-attribute . . . . . 2282
radius-secure-proxy local-server . . . . . 2284
radius-server local . . . . . 2285
server auth-port . . . . . 2286
server enable . . . . . 2287
show radius local-server group . . . . . 2288
show radius local-server nas . . . . . 2289
show radius local-server statistics . . . . . 2290
show radius local-server user . . . . . 2291
user (RADIUS server) . . . . . 2293
vlan (RADIUS server) . . . . . 2295

**Chapter 47: Public Key Infrastructure and Crypto Commands . . . . . 2296**
Introduction . . . . . 2296
crypto key generate rsa . . . . . 2297
crypto key zeroize . . . . . 2298
crypto pki authenticate . . . . . 2299
crypto pki enroll . . . . . 2300
crypto pki enroll user . . . . . 2301

crypto pki export pem . . . . . 2303
crypto pki export pkcs12 . . . . . 2304
crypto pki import pem . . . . . 2306
crypto pki import pkcs12 . . . . . 2308
crypto pki trustpoint . . . . . 2309
enrollment (ca-trustpoint) . . . . . 2310
fingerprint (ca-trustpoint) . . . . . 2311
no crypto pki certificate . . . . . 2313
rsakeypair (ca-trustpoint) . . . . . 2314
show crypto key mypubkey rsa . . . . . 2315
show crypto pki certificates . . . . . 2316
show crypto pki enrollment user . . . . . 2318
show crypto pki trustpoint . . . . . 2319
subject-name (ca-trustpoint) . . . . . 2320

**Chapter 48: TACACS+ Commands . . . . . 2322**
Introduction . . . . . 2322
aaa authorization commands . . . . . 2323
aaa authorization config-commands . . . . . 2325
authorization commands . . . . . 2326
ip tacacs source-interface . . . . . 2328
show tacacs+ . . . . . 2329
tacacs-server host . . . . . 2331
tacacs-server key . . . . . 2333
tacacs-server timeout . . . . . 2334

**PART 6: High Availability . . . . . 2335**

**Chapter 49: High Availability Commands . . . . . 2336**
Introduction . . . . . 2336
ha associate . . . . . 2337
wan-bypass (interface mode) . . . . . 2339

**Chapter 50: VRRP Commands . . . . . 2340**
Introduction . . . . . 2340
advertisement-interval . . . . . 2342
alternate-checksum-mode . . . . . 2344
circuit-failover . . . . . 2345
debug vrrp . . . . . 2347
debug vrrp events . . . . . 2348
debug vrrp packet . . . . . 2349
disable (VRRP) . . . . . 2350
enable (VRRP) . . . . . 2351
preempt-mode . . . . . 2352
priority . . . . . 2354
router ipv6 vrrp (interface) . . . . . 2356
router vrrp (interface) . . . . . 2358
show debugging vrrp . . . . . 2360
show running-config router ipv6 vrrp . . . . . 2361
show running-config router vrrp . . . . . 2362
show vrrp . . . . . 2363
show vrrp counters . . . . . 2365

show vrrp ipv6 . . . . . 2368
show vrrp (session) . . . . . 2369
transition-mode . . . . . 2371
undebug vrrp . . . . . 2373
undebug vrrp events . . . . . 2374
undebug vrrp packet . . . . . 2375
virtual-ip . . . . . 2376
virtual-ipv6 . . . . . 2378
vrrp vmac . . . . . 2380

**PART 7: Network Management . . . . . 2381**

**Chapter 51: Allied Telesis Management Framework™ (AMF) Commands . . . . . 2382**
Introduction . . . . . 2382
application-proxy ip-filter . . . . . 2388
application-proxy quarantine-vlan . . . . . 2389
application-proxy redirect-url . . . . . 2390
application-proxy threat-protection . . . . . 2391
application-proxy threat-protection send-summary . . . . . 2392
application-proxy whitelist advertised-address . . . . . 2393
application-proxy whitelist enable . . . . . 2394
application-proxy whitelist protection tls . . . . . 2395
application-proxy whitelist server . . . . . 2396
application-proxy whitelist trustpoint (deprecated) . . . . . 2398
area-link . . . . . 2399
atmf-arealink . . . . . 2401
atmf-link . . . . . 2403
atmf area . . . . . 2404
atmf area password . . . . . 2406
atmf authorize . . . . . 2408
atmf authorize provision . . . . . 2410
atmf backup . . . . . 2412
atmf backup area-masters delete . . . . . 2413
atmf backup area-masters enable . . . . . 2414
atmf backup area-masters now . . . . . 2415
atmf backup area-masters synchronize . . . . . 2416
atmf backup bandwidth . . . . . 2417
atmf backup delete . . . . . 2418
atmf backup enable . . . . . 2419
atmf backup guests delete . . . . . 2420
atmf backup guests enable . . . . . 2421
atmf backup guests now . . . . . 2422
atmf backup guests synchronize . . . . . 2423
atmf backup now . . . . . 2424
atmf backup redundancy enable . . . . . 2426
atmf backup server . . . . . 2427
atmf backup stop . . . . . 2429
atmf backup synchronize . . . . . 2430
atmf cleanup . . . . . 2431
atmf container . . . . . 2432
atmf container login . . . . . 2433
atmf controller . . . . . 2434

atmf distribute firmware . . . . . 2435
atmf domain vlan . . . . . 2437
atmf enable . . . . . 2440
atmf group (membership) . . . . . 2441
atmf guest-class . . . . . 2443
atmf log-verbose . . . . . 2445
atmf management subnet . . . . . 2446
atmf management vlan . . . . . 2449
atmf master . . . . . 2451
atmf mtu . . . . . 2452
atmf network-name . . . . . 2453
atmf provision (interface) . . . . . 2454
atmf provision node . . . . . 2455
atmf reboot-rolling . . . . . 2457
atmf recover . . . . . 2461
atmf recover guest . . . . . 2463
atmf recover led-off . . . . . 2464
atmf recover over-eth . . . . . 2465
atmf recovery-server . . . . . 2466
atmf remote-login . . . . . 2468
atmf restricted-login . . . . . 2470
atmf retry guest-link . . . . . 2472
atmf secure-mode . . . . . 2473
atmf secure-mode certificate expire . . . . . 2475
atmf secure-mode certificate expiry . . . . . 2476
atmf secure-mode certificate renew . . . . . 2477
atmf secure-mode enable-all . . . . . 2478
atmf select-area . . . . . 2480
atmf topology-gui enable . . . . . 2481
atmf trustpoint . . . . . 2482
atmf virtual-crosslink . . . . . 2484
atmf virtual-link . . . . . 2486
atmf virtual-link description . . . . . 2489
atmf virtual-link protection . . . . . 2490
atmf working-set . . . . . 2492
bridge-group . . . . . 2494
clear application-proxy threat-protection . . . . . 2495
clear atmf links . . . . . 2496
clear atmf links virtual . . . . . 2497
clear atmf links statistics . . . . . 2498
clear atmf recovery-file . . . . . 2499
clear atmf secure-mode certificates . . . . . 2500
clear atmf secure-mode statistics . . . . . 2501
clone (amf-provision) . . . . . 2502
configure boot config (amf-provision) . . . . . 2504
configure boot system (amf-provision) . . . . . 2506
copy (amf-provision) . . . . . 2508
create (amf-provision) . . . . . 2509
debug atmf . . . . . 2511
debug atmf packet . . . . . 2513
delete (amf-provision) . . . . . 2516
discovery . . . . . 2518
description (amf-container) . . . . . 2520

erase factory-default . . . . . 2521
http-enable . . . . . 2522
identity (amf-provision) . . . . . 2524
license-cert (amf-provision) . . . . . 2526
locate (amf-provision) . . . . . 2528
log event-host . . . . . 2530
login-fallback enable . . . . . 2531
modeltype . . . . . 2532
service atmf-application-proxy . . . . . 2533
show application-proxy threat-protection . . . . . 2534
show application-proxy whitelist advertised-address . . . . . 2536
show application-proxy whitelist interface . . . . . 2537
show application-proxy whitelist server . . . . . 2539
show application-proxy whitelist supplicant . . . . . 2540
show atmf . . . . . 2542
show atmf area . . . . . 2546
show atmf area guests . . . . . 2549
show atmf area guests-detail . . . . . 2551
show atmf area nodes . . . . . 2553
show atmf area nodes-detail . . . . . 2555
show atmf area summary . . . . . 2557
show atmf authorization . . . . . 2558
show atmf backup . . . . . 2561
show atmf backup area . . . . . 2565
show atmf backup guest . . . . . 2567
show atmf container . . . . . 2569
show atmf detail . . . . . 2572
show atmf group . . . . . 2574
show atmf group members . . . . . 2576
show atmf guests . . . . . 2578
show atmf guests detail . . . . . 2580
show atmf links . . . . . 2583
show atmf links detail . . . . . 2585
show atmf links guest . . . . . 2594
show atmf links guest detail . . . . . 2596
show atmf links statistics . . . . . 2600
show atmf nodes . . . . . 2603
show atmf provision nodes . . . . . 2605
show atmf recovery-file . . . . . 2607
show atmf secure-mode . . . . . 2608
show atmf secure-mode audit . . . . . 2610
show atmf secure-mode audit link . . . . . 2611
show atmf secure-mode certificates . . . . . 2612
show atmf secure-mode sa . . . . . 2615
show atmf secure-mode statistics . . . . . 2618
show atmf tech . . . . . 2620
show atmf virtual-links . . . . . 2623
show atmf working-set . . . . . 2625
show debugging atmf . . . . . 2626
show debugging atmf packet . . . . . 2627
show running-config atmf . . . . . 2628
state . . . . . 2629
switchport atmf-agentlink . . . . . 2631

switchport atmf-arealink . . . . . 2632
switchport atmf-crosslink . . . . . 2634
switchport atmf-guestlink . . . . . 2636
switchport atmf-link . . . . . 2638
type atmf node . . . . . 2639
undebug atmf . . . . . 2642
username . . . . . 2643

**Chapter 52: Autonomous Wave Control Commands . . . . . 2644**
Introduction . . . . . 2644
airtime-fairness enable (wireless-ap-prof-radio) . . . . . 2650
antenna (wireless-ap-prof-radio) . . . . . 2652
ap . . . . . 2653
ap-profile (wireless) . . . . . 2654
ap-profile (wireless-ap) . . . . . 2655
authentication (wireless-sec-wep) . . . . . 2656
auto-discovery disable . . . . . 2657
band . . . . . 2658
band-steering (wireless-network) . . . . . 2659
bandwidth (wireless-ap-prof-radio) . . . . . 2660
bcast-key-refresh-interval (wireless-sec-wpa-ent) . . . . . 2661
bcast-key-refresh-interval (wireless-sec-wpa-psnl) . . . . . 2662
captive-portal . . . . . 2663
captive-portal virtual-ip . . . . . 2664
cb-channel . . . . . 2665
channels (wireless-ap-prof-radio) . . . . . 2666
channel-blanket . . . . . 2667
channel (wireless-ap-radio) . . . . . 2668
ciphers (wireless-sec-wpa-ent) . . . . . 2669
ciphers (wireless-sec-wpa-psnl) . . . . . 2670
community read-only (wireless-ap-prof-snmp) . . . . . 2671
community trap (wireless-ap-prof-snmp) . . . . . 2672
control-vlan . . . . . 2673
country-code . . . . . 2674
day (wireless-task) . . . . . 2675
debug wireless . . . . . 2676
description (wireless-ap) . . . . . 2678
description (wireless-ap-prof) . . . . . 2679
description (wireless-mac-flt) . . . . . 2680
description (wireless-network) . . . . . 2681
description (wireless-sc-prof) . . . . . 2682
description (wireless-task) . . . . . 2683
designated-ap . . . . . 2684
enable (wireless-ap-prof-snmp) . . . . . 2685
emergency-mode . . . . . 2686
enable (wireless) . . . . . 2687
enable (wireless-ap) . . . . . 2688
enable (wireless-ap-prof-radio) . . . . . 2689
enable (wireless-network-cp) . . . . . 2690
enable (wireless-sec-wep) . . . . . 2691
enable (wireless-task) . . . . . 2692
enable (wireless-wds) . . . . . 2693
external-page-url . . . . . 2694

filter-entry . . . . . 2695
force-disable (wireless-ap-radio) . . . . . 2697
hide-ssid (wireless-network) . . . . . 2698
hwtype . . . . . 2699
index . . . . . 2701
initialization-button enable . . . . . 2702
ip-address (wireless-ap) . . . . . 2703
key . . . . . 2704
key (wireless-sc-prof) . . . . . 2705
key (wireless-sec-wep) . . . . . 2706
key (wireless-sec-wpa-psnl) . . . . . 2708
led enable . . . . . 2709
length (wireless-sec-wep) . . . . . 2710
log enable destination . . . . . 2711
log interval neighbor-ap . . . . . 2712
log rotate neighbor-ap . . . . . 2713
log rotate wireless-client . . . . . 2714
log size wireless-client . . . . . 2715
login username (wireless-ap) . . . . . 2716
login-password (wireless-ap) . . . . . 2717
mac-address (wireless-ap) . . . . . 2718
mac-auth password . . . . . 2719
mac-auth radius auth group (wireless-network) . . . . . 2720
mac-auth username . . . . . 2721
management address . . . . . 2723
management-frame-protection enable (wireless-sec-wpa-ent) . . . . . 2724
management-frame-protection enable (wireless-sec-wpa-psnl) . . . . . 2725
max-clients . . . . . 2726
mode (wireless-ap-prof-radio) . . . . . 2727
mode (wireless-network-cp) . . . . . 2729
network (wireless) . . . . . 2731
ntp designated-server . . . . . 2732
ntp designated-server enable . . . . . 2733
ntp designated-server period . . . . . 2734
outdoor . . . . . 2735
page-proxy-url . . . . . 2736
peer (wireless-wds) . . . . . 2737
permit host (wireless-ap-prof-snmp) . . . . . 2738
port (wireless-ap-prof-snmp) . . . . . 2739
power (wireless-ap-radio) . . . . . 2740
pre-authentication enable (wireless-sec-wpa-ent) . . . . . 2741
radio (wireless-ap) . . . . . 2742
radio (wireless-ap-profile) . . . . . 2743
radius accounting enable . . . . . 2744
radius auth group (wireless-network-cp) . . . . . 2745
radius auth group (wireless-sec-wpa-ent) . . . . . 2747
redirect-url . . . . . 2748
rogue-ap-detection enable (wireless) . . . . . 2750
sc-profile . . . . . 2751
sc-channel . . . . . 2752
security (wireless) . . . . . 2753
security (wireless-network) . . . . . 2755
security (wireless-wds) . . . . . 2756

service wireless . . . . . 2757
session-keep . . . . . 2758
session-key-refresh-interval . . . . . 2759
show debugging wireless . . . . . 2760
show wireless . . . . . 2761
show wireless ap . . . . . 2762
show wireless ap capability . . . . . 2767
show wireless ap client . . . . . 2769
show wireless ap neighbors . . . . . 2770
show wireless ap power-channel . . . . . 2771
show wireless ap-profile . . . . . 2772
show wireless auto-config . . . . . 2775
show wireless captive-portal network walled-garden . . . . . 2778
show wireless channel-blanket ap status . . . . . 2779
show wireless channel-blanket ap-profile status . . . . . 2780
show wireless country-code . . . . . 2781
show wireless network . . . . . 2782
show wireless power-channel calculate . . . . . 2784
show wireless sc-profile . . . . . 2785
show wireless security . . . . . 2787
show wireless smart-connect ap . . . . . 2789
show wireless task . . . . . 2790
show wireless wds . . . . . 2793
show wireless wireless-mac-filter . . . . . 2795
smart-connect-profile . . . . . 2797
snmp (wireless-ap-prof) . . . . . 2798
ssid (wireless-network) . . . . . 2799
ssid (wireless-sc-prof) . . . . . 2800
station-isolation enable . . . . . 2801
station-isolation enable (wireless-ap-prof-radio) . . . . . 2802
task . . . . . 2803
time (wireless-task) . . . . . 2804
trap host (wireless-ap-prof-snmp) . . . . . 2805
type (wireless-sec-wep) . . . . . 2806
type ap-configuration apply ap . . . . . 2807
type download ap (wireless-task) . . . . . 2808
type power-channel ap all . . . . . 2809
username (wireless-ap-prof-snmp) . . . . . 2810
vap . . . . . 2812
vap network (wireless-ap-prof-radio) . . . . . 2814
version (wireless-ap-prof-snmp) . . . . . 2815
versions (wireless-sec-wpa-ent) . . . . . 2816
versions (wireless-sec-wpa-psnl) . . . . . 2817
vlan (wireless-network) . . . . . 2818
walled-garden entry . . . . . 2819
wds . . . . . 2821
wds radio (wireless-ap) . . . . . 2822
web-auth radius auth group . . . . . 2823
wireless . . . . . 2824
wireless ap-configuration apply ap . . . . . 2825
wireless auto-config . . . . . 2826
wireless download ap url . . . . . 2828
wireless emergency-mode . . . . . 2830

wireless export . . . . . 2831
wireless import . . . . . 2832
wireless power-channel ap all . . . . . 2833
wireless reset ap . . . . . 2834
wireless-mac-filter (wireless) . . . . . 2835
wireless-mac-filter (wireless-ap-prof) . . . . . 2836
wireless-mac-filter enable . . . . . 2838

**Chapter 53: Device Discovery using SNMP Commands . . . . . 2839**
Introduction . . . . . 2839
clear snmp-discovery . . . . . 2840
service snmp-discovery . . . . . 2841
show running-config snmp-discovery . . . . . 2842
show snmp-discovery . . . . . 2843
snmp-discovery arp-polling-interval . . . . . 2846
snmp-discovery community . . . . . 2847
snmp-discovery deny . . . . . 2848
snmp-discovery permit . . . . . 2850
snmp-discovery snmp-polling-interval . . . . . 2851
snmp-discovery snmp-version . . . . . 2852
snmp-discovery user . . . . . 2853

**Chapter 54: Dynamic Host Configuration Protocol (DHCP) Commands . . . . . 2855**
Introduction . . . . . 2855
bootfile . . . . . 2857
clear ip dhcp binding . . . . . 2858
default-router . . . . . 2859
dns-server . . . . . 2860
domain-name . . . . . 2861
host (DHCP) . . . . . 2862
ip address dhcp . . . . . 2863
ip dhcp bootp ignore . . . . . 2865
ip dhcp leasequery enable . . . . . 2866
ip dhcp option . . . . . 2867
ip dhcp pool . . . . . 2869
ip dhcp-client default-route distance . . . . . 2870
ip dhcp-client request vendor-identifying-specific . . . . . 2872
ip dhcp-client vendor-identifying-class . . . . . 2873
ip dhcp-relay agent-option . . . . . 2874
ip dhcp-relay agent-option checking . . . . . 2876
ip dhcp-relay agent-option remote-id . . . . . 2878
ip dhcp-relay information policy . . . . . 2880
ip dhcp-relay maxhops . . . . . 2882
ip dhcp-relay max-message-length . . . . . 2883
ip dhcp-relay server-address . . . . . 2885
ip dhcp-relay use-client-side-address . . . . . 2887
lease . . . . . 2889
network (DHCP) . . . . . 2891
next-server . . . . . 2892
option . . . . . 2893
probe enable . . . . . 2895
probe packets . . . . . 2896

probe timeout . . . . . 2897
probe type . . . . . 2898
range . . . . . 2899
route . . . . . 2900
service dhcp-relay . . . . . 2901
service dhcp-server . . . . . 2902
short-lease-threshold . . . . . 2903
show counter dhcp-client . . . . . 2905
show counter dhcp-relay . . . . . 2906
show counter dhcp-server . . . . . 2910
show dhcp lease . . . . . 2912
show ip dhcp binding . . . . . 2913
show ip dhcp pool . . . . . 2915
show ip dhcp-relay . . . . . 2920
show ip dhcp server statistics . . . . . 2922
show ip dhcp server summary . . . . . 2924
subnet-mask . . . . . 2925

**Chapter 55: DHCP for IPv6 (DHCPv6) Commands . . . . . 2926**
Introduction . . . . . 2926
address prefix . . . . . 2928
address range . . . . . 2930
clear counter ipv6 dhcp-client . . . . . 2932
clear counter ipv6 dhcp-server . . . . . 2933
clear ipv6 dhcp binding . . . . . 2934
clear ipv6 dhcp client . . . . . 2936
dns-server (DHCPv6) . . . . . 2937
domain-name (DHCPv6) . . . . . 2939
ip dhcp-relay agent-option . . . . . 2940
ip dhcp-relay agent-option checking . . . . . 2942
ip dhcp-relay agent-option remote-id . . . . . 2944
ip dhcp-relay information policy . . . . . 2946
ip dhcp-relay maxhops . . . . . 2948
ip dhcp-relay max-message-length . . . . . 2949
ip dhcp-relay server-address . . . . . 2951
ipv6 address (DHCPv6 PD) . . . . . 2953
ipv6 address dhcp . . . . . 2956
ipv6 dhcp client pd . . . . . 2958
ipv6 dhcp option . . . . . 2960
ipv6 dhcp pool . . . . . 2962
ipv6 dhcp server . . . . . 2964
ipv6 local pool . . . . . 2965
ipv6 nd prefix (DHCPv6) . . . . . 2967
link-address . . . . . 2969
option (DHCPv6) . . . . . 2971
prefix-delegation pool . . . . . 2973
service dhcp-relay . . . . . 2975
show counter dhcp-relay . . . . . 2976
show counter ipv6 dhcp-client . . . . . 2980
show counter ipv6 dhcp-server . . . . . 2982
show ip dhcp-relay . . . . . 2984
show ipv6 dhcp . . . . . 2986
show ipv6 dhcp binding . . . . . 2987

show ipv6 dhcp interface . . . . . 2990
show ipv6 dhcp pool . . . . . 2992
sntp-address . . . . . 2994

**Chapter 56: NTP Commands . . . . . 2995**
Introduction . . . . . 2995
ntp authentication-key . . . . . 2996
ntp broadcastdelay . . . . . 2997
ntp master . . . . . 2998
ntp peer . . . . . 2999
ntp rate-limit . . . . . 3001
ntp restrict . . . . . 3002
ntp server . . . . . 3004
ntp source . . . . . 3006
show ntp associations . . . . . 3008
show ntp counters . . . . . 3010
show ntp counters associations . . . . . 3011
show ntp status . . . . . 3012

**Chapter 57: SNMP Commands . . . . . 3013**
Introduction . . . . . 3013
alias (interface) . . . . . 3015
debug snmp . . . . . 3016
show counter snmp-server . . . . . 3017
show debugging snmp . . . . . 3021
show running-config snmp . . . . . 3022
show snmp-server . . . . . 3023
show snmp-server community . . . . . 3024
show snmp-server group . . . . . 3025
show snmp-server user . . . . . 3026
show snmp-server view . . . . . 3027
snmp trap link-status . . . . . 3028
snmp trap link-status suppress . . . . . 3030
snmp-server . . . . . 3032
snmp-server community . . . . . 3034
snmp-server contact . . . . . 3035
snmp-server enable trap . . . . . 3036
snmp-server engineID local . . . . . 3039
snmp-server engineID local reset . . . . . 3041
snmp-server group . . . . . 3042
snmp-server host . . . . . 3044
snmp-server legacy-ifadminstatus . . . . . 3046
snmp-server location . . . . . 3047
snmp-server source-interface . . . . . 3048
snmp-server startup-trap-delay . . . . . 3049
snmp-server user . . . . . 3050
snmp-server view . . . . . 3053
undebug snmp . . . . . 3054

**Chapter 58: LLDP Commands . . . . . 3055**
Introduction . . . . . 3055
clear lldp statistics . . . . . 3057

clear lldp table . . . . . 3058
debug lldp . . . . . 3059
lldp faststart-count . . . . . 3060
lldp holdtime-multiplier . . . . . 3061
lldp management-address . . . . . 3062
lldp med-notifications . . . . . 3063
lldp med-tlv-select . . . . . 3064
lldp non-strict-med-tlv-order-check . . . . . 3067
lldp notification-interval . . . . . 3068
lldp notifications . . . . . 3069
lldp port-number-type . . . . . 3070
lldp reinit . . . . . 3071
lldp run . . . . . 3072
lldp timer . . . . . 3073
lldp tlv-select . . . . . 3074
lldp transmit receive . . . . . 3076
lldp tx-delay . . . . . 3077
location civic-location configuration . . . . . 3078
location civic-location identifier . . . . . 3082
location civic-location-id . . . . . 3083
location coord-location configuration . . . . . 3084
location coord-location identifier . . . . . 3086
location coord-location-id . . . . . 3087
location elin-location . . . . . 3089
location elin-location-id . . . . . 3090
show debugging lldp . . . . . 3091
show lldp . . . . . 3092
show lldp interface . . . . . 3094
show lldp local-info . . . . . 3096
show lldp neighbors . . . . . 3101
show lldp neighbors detail . . . . . 3102
show lldp statistics . . . . . 3106
show lldp statistics interface . . . . . 3108
show location . . . . . 3110

**Chapter 59: Mail (SMTP) Commands . . . . . 3112**
Introduction . . . . . 3112
debug mail . . . . . 3113
delete mail . . . . . 3114
mail . . . . . 3115
mail from . . . . . 3117
mail smtpserver . . . . . 3118
mail smtpserver authentication . . . . . 3119
mail smtpserver port . . . . . 3121
show counter mail . . . . . 3123
show mail . . . . . 3124
undebug mail . . . . . 3125

**Chapter 60: Secure Shell (SSH) Commands . . . . . 3126**
Introduction . . . . . 3126
banner login (SSH) . . . . . 3128
clear ssh . . . . . 3129

crypto key destroy hostkey . . . . . 3130
crypto key destroy userkey . . . . . 3131
crypto key generate hostkey . . . . . 3132
crypto key generate userkey . . . . . 3134
crypto key pubkey-chain knownhosts . . . . . 3135
crypto key pubkey-chain userkey . . . . . 3137
debug ssh client . . . . . 3139
debug ssh server . . . . . 3140
service ssh . . . . . 3141
show banner login . . . . . 3143
show crypto key hostkey . . . . . 3144
show crypto key pubkey-chain knownhosts . . . . . 3146
show crypto key pubkey-chain userkey . . . . . 3148
show crypto key userkey . . . . . 3149
show running-config ssh . . . . . 3150
show ssh . . . . . 3152
show ssh client . . . . . 3154
show ssh server . . . . . 3155
show ssh server allow-users . . . . . 3157
show ssh server deny-users . . . . . 3158
ssh . . . . . 3159
ssh client . . . . . 3161
ssh server . . . . . 3163
ssh server allow-users . . . . . 3165
ssh server authentication . . . . . 3167
ssh server deny-users . . . . . 3169
ssh server max-auth-tries . . . . . 3171
ssh server resolve-host . . . . . 3172
ssh server scp . . . . . 3173
ssh server secure-ciphers . . . . . 3174
ssh server sftp . . . . . 3175
undebug ssh client . . . . . 3176
undebug ssh server . . . . . 3177

**Chapter 61: Trigger Commands . . . . . 3178**
Introduction . . . . . 3178
active (trigger) . . . . . 3180
day . . . . . 3181
debug trigger . . . . . 3183
description (trigger) . . . . . 3184
repeat . . . . . 3185
script . . . . . 3186
show debugging trigger . . . . . 3188
show running-config trigger . . . . . 3189
show trigger . . . . . 3190
test . . . . . 3195
time (trigger) . . . . . 3196
trap . . . . . 3198
trigger . . . . . 3199
trigger activate . . . . . 3200
type atmf node . . . . . 3201
type card . . . . . 3204
type cpu . . . . . 3205

type interface . . . . . 3206
type linkmon-probe . . . . . 3207
type log . . . . . 3209
type memory . . . . . 3210
type periodic . . . . . 3211
type ping-poll . . . . . 3212
type reboot . . . . . 3213
type time . . . . . 3214
type usb . . . . . 3215
undebug trigger . . . . . 3216

**Chapter 62: Ping-Polling Commands . . . . . 3217**
Introduction . . . . . 3217
active (ping-polling) . . . . . 3219
clear ping-poll . . . . . 3220
critical-interval . . . . . 3221
debug ping-poll . . . . . 3222
description (ping-polling) . . . . . 3223
fail-count . . . . . 3224
ip (ping-polling) . . . . . 3225
length (ping-poll data) . . . . . 3226
normal-interval . . . . . 3227
ping-poll . . . . . 3228
sample-size . . . . . 3229
show counter ping-poll . . . . . 3231
show ping-poll . . . . . 3233
source-ip . . . . . 3237
timeout (ping polling) . . . . . 3239
up-count . . . . . 3240
undebug ping-poll . . . . . 3241

**PART 8: Firewall and Network Address Translation (NAT) . . . . . 3242**

**Chapter 63: Firewall Commands . . . . . 3243**
Introduction . . . . . 3243
clear firewall connections . . . . . 3245
connection-limit (firewall) . . . . . 3246
connection-log events . . . . . 3248
firewall . . . . . 3249
debug firewall . . . . . 3250
ip tcp timeout established . . . . . 3251
move rule (firewall) . . . . . 3252
protect (firewall) . . . . . 3253
rule (firewall) . . . . . 3254
show connection-log events . . . . . 3256
show firewall . . . . . 3257
show firewall connections . . . . . 3258
show firewall connections limits . . . . . 3259
show firewall connections limits config-check . . . . . 3260
show firewall rule . . . . . 3261
show firewall rule config-check . . . . . 3263
show debugging firewall . . . . . 3264

show running-config firewall . . . . . 3265

**Chapter 64: Application and Entity Commands . . . . . 3266**
Introduction . . . . . 3266
application . . . . . 3268
dport . . . . . 3270
dscp . . . . . 3272
host (network) . . . . . 3274
icmp-code . . . . . 3276
icmp-type . . . . . 3278
ip address (host) . . . . . 3280
ip subnet . . . . . 3282
ipv6 address (host) . . . . . 3284
ipv6 subnet . . . . . 3286
network (zone) . . . . . 3288
protocol . . . . . 3290
show application . . . . . 3291
show application detail . . . . . 3292
show entity . . . . . 3295
sport . . . . . 3298
zone . . . . . 3300

**Chapter 65: NAT Commands . . . . . 3302**
Introduction . . . . . 3302
enable (nat) . . . . . 3304
ip limited-local-proxy-arp . . . . . 3305
local-proxy-arp . . . . . 3307
move rule (nat) . . . . . 3308
nat . . . . . 3309
rule (nat) . . . . . 3310
show nat . . . . . 3314
show nat rule . . . . . 3315
show nat rule config-check . . . . . 3317
show running-config nat . . . . . 3318

**PART 9: Advanced Network Protection . . . . . 3319**

**Chapter 66: IPS Commands . . . . . 3320**
Introduction . . . . . 3320
alert-thresholding . . . . . 3321
category action (IPS) . . . . . 3322
ips . . . . . 3323
protect (IPS) . . . . . 3324
show ips . . . . . 3325
show ips categories . . . . . 3326
show running-config ips . . . . . 3328

**Chapter 67: Malware Protection Commands . . . . . 3329**
Introduction . . . . . 3329
malware-protection . . . . . 3330
protect (malware) . . . . . 3331

provider kaspersky (malware) . . . . . 3332
show malware-protection . . . . . 3333
show running-config malware-protection . . . . . 3334
update-interval (malware) . . . . . 3335

**Chapter 68: Antivirus Commands . . . . . 3337**
Introduction . . . . . 3337
action (antivirus) . . . . . 3339
antivirus . . . . . 3341
debug antivirus . . . . . 3342
protect (antivirus) . . . . . 3343
provider kaspersky (antivirus) . . . . . 3344
show antivirus . . . . . 3345
show antivirus statistics . . . . . 3346
show debugging antivirus . . . . . 3347
show running-config antivirus . . . . . 3348
update-interval (antivirus) . . . . . 3349

**Chapter 69: URL Filtering Commands . . . . . 3351**
Introduction . . . . . 3351
blacklist . . . . . 3353
log url-requests . . . . . 3355
protect (url-filter) . . . . . 3356
provider kaspersky (url-filter) . . . . . 3357
show running-config url-filter . . . . . 3358
show url-filter . . . . . 3359
update-interval (url-filter) . . . . . 3360
url-filter reload custom-lists . . . . . 3362
url-filter . . . . . 3363
whitelist (url-filter) . . . . . 3364

**Chapter 70: Web Control Commands . . . . . 3366**
Introduction . . . . . 3366
action (web-control) . . . . . 3368
bypass-web-control entity . . . . . 3369
category (web-control) . . . . . 3371
debug web-control . . . . . 3373
match (web-control) . . . . . 3374
move rule (web-control) . . . . . 3376
protect (web-control) . . . . . 3377
provider digitalarts (web-control) . . . . . 3378
rule (web-control) . . . . . 3379
show debugging web-control . . . . . 3382
show running-config web-control . . . . . 3383
show web-control . . . . . 3384
show web-control bypass . . . . . 3386
show web-control categories . . . . . 3387
show web-control rules . . . . . 3389
web-control . . . . . 3390
web-control categorize . . . . . 3392

**Chapter 71: Application Awareness Commands . . . . . 3393**

Introduction . . . . . 3393
counters detailed . . . . . 3394
dpi . . . . . 3395
enable (dpi) . . . . . 3396
provider (dpi) . . . . . 3398
show dpi . . . . . 3399
show dpi statistics . . . . . 3401
show running-config dpi . . . . . 3403
update-interval (dpi) . . . . . 3404

**Chapter 72: IP Reputation Commands . . . . . 3405**
Introduction . . . . . 3405
category action (IP Reputation) . . . . . 3407
ip-reputation . . . . . 3409
protect (IP Reputation) . . . . . 3410
provider proofpoint (IP Reputation) . . . . . 3411
show ip-reputation . . . . . 3412
show ip-reputation categories . . . . . 3413
show running-config ip-reputation . . . . . 3415
update-interval (IP Reputation) . . . . . 3416
whitelist (IP Reputation) . . . . . 3418

**Chapter 73: URL Offload Commands . . . . . 3419**
Introduction . . . . . 3419
endpoint-source . . . . . 3421
entry (endpoint-manual) . . . . . 3423
exclude-entry (endpoint-manual) . . . . . 3425
exclude-entry (endpoint-office365) . . . . . 3427
filter-endpoint . . . . . 3429
filter-endpoint include all . . . . . 3432
filter-entry exclude . . . . . 3434
filter-entry exclude type . . . . . 3436
pac-file http-server port . . . . . 3438
pac-file proxy-address . . . . . 3440
pac-file template . . . . . 3441
parser-updates enable . . . . . 3443
parser-updates interval . . . . . 3444
service url-offload . . . . . 3445
show running-config url-offload . . . . . 3446
show url-offload endpoint-source . . . . . 3447
show url-offload endpoint-source manual entries . . . . . 3448
show url-offload endpoint-source office365 entries . . . . . 3450
show url-offload endpoint-source office365 raw-data . . . . . 3453
show url-offload pac-file . . . . . 3456
show url-offload pac-file template . . . . . 3460
update-interval (endpoint-office365) . . . . . 3462
url (endpoint office365) . . . . . 3463
url-offload . . . . . 3464
url-offload update-now . . . . . 3465

**PART 10: Virtual Private Networks (VPNs) . . . . . 3466**

**Chapter 74: IPsec Commands . . . . . 3467**
Introduction . . . . . 3467
clear isakmp sa . . . . . 3469
crypto ipsec profile . . . . . 3470
crypto isakmp key . . . . . 3472
crypto isakmp peer . . . . . 3475
crypto isakmp profile . . . . . 3477
debug isakmp . . . . . 3479
dpd-interval . . . . . 3481
dpd-timeout . . . . . 3482
interface tunnel (IPsec) . . . . . 3483
lifetime (IPsec Profile) . . . . . 3484
lifetime (ISAKMP Profile) . . . . . 3485
no debug isakmp . . . . . 3486
pfs . . . . . 3487
rekey . . . . . 3489
show debugging isakmp . . . . . 3490
show interface tunnel (IPsec) . . . . . 3491
show ipsec counters . . . . . 3492
show ipsec peer . . . . . 3493
show ipsec policy . . . . . 3494
show ipsec profile . . . . . 3495
show ipsec sa . . . . . 3497
show isakmp counters . . . . . 3498
show isakmp key (IPsec) . . . . . 3499
show isakmp peer . . . . . 3500
show isakmp profile . . . . . 3501
show isakmp sa . . . . . 3503
transform (IPsec Profile) . . . . . 3504
transform (ISAKMP Profile) . . . . . 3505
tunnel destination (IPsec) . . . . . 3507
tunnel local name (IPsec) . . . . . 3509
tunnel local selector . . . . . 3510
tunnel mode ipsec . . . . . 3512
tunnel protection ipsec (IPsec) . . . . . 3513
tunnel remote name (IPsec) . . . . . 3514
tunnel remote selector . . . . . 3515
tunnel security-reprocessing . . . . . 3517
tunnel selector paired . . . . . 3518
tunnel source (IPsec) . . . . . 3519
undebug isakmp . . . . . 3521
version (ISAKMP) . . . . . 3522

**Chapter 75: GRE Tunneling Commands . . . . . 3523**
Introduction . . . . . 3523
interface tunnel (GRE) . . . . . 3524
local authentication . . . . . 3525
remote authentication . . . . . 3527
show interface tunnel (GRE) . . . . . 3529
tunnel checksum . . . . . 3530
tunnel dscp . . . . . 3531
tunnel destination (GRE) . . . . . 3532

tunnel endpoint . . . . . 3534
tunnel local name (GRE) . . . . . 3536
tunnel mode gre . . . . . 3537
tunnel mode gre multipoint . . . . . 3538
tunnel protection ipsec (GRE) . . . . . 3539
tunnel remote name (GRE) . . . . . 3540
tunnel security-reprocessing . . . . . 3541
tunnel source (GRE) . . . . . 3542
tunnel ttl . . . . . 3544

**Chapter 76: OpenVPN Commands . . . . . 3545**
Introduction . . . . . 3545
ip tcp adjust-mss . . . . . 3547
ipv6 tcp adjust-mss . . . . . 3549
show interface tunnel (OpenVPN) . . . . . 3551
show openvpn connections . . . . . 3552
show openvpn connections detail . . . . . 3553
tunnel openvpn authentication . . . . . 3554
tunnel openvpn cipher . . . . . 3555
tunnel mode openvpn tap . . . . . 3557
tunnel mode openvpn tun . . . . . 3558
tunnel openvpn expiry-bytes . . . . . 3559
tunnel openvpn expiry-seconds . . . . . 3560
tunnel openvpn port . . . . . 3561
tunnel openvpn tagging . . . . . 3562
tunnel security-reprocessing . . . . . 3563

**Chapter 77: L2TPv2 PPP Commands . . . . . 3564**
Introduction . . . . . 3564
debug l2tp . . . . . 3566
destination . . . . . 3567
encapsulation ppp . . . . . 3568
ip-version . . . . . 3570
l2tp tunnel . . . . . 3571
l2tp unmanaged port . . . . . 3573
l2tp-profile . . . . . 3574
local-subaddress . . . . . 3575
protection ipsec . . . . . 3576
protection local-name . . . . . 3577
protection profile . . . . . 3579
protection remote-name . . . . . 3580
remote-subaddress . . . . . 3582
shared-secret . . . . . 3583
show debugging l2tp . . . . . 3584
show l2tp session . . . . . 3585
show l2tp tunnel . . . . . 3587
show l2tp tunnel config-check . . . . . 3591
show running-config l2tp-profile . . . . . 3593
show running-config l2tp-tunnel . . . . . 3594
source . . . . . 3595
version . . . . . 3596

**Chapter 78: L2TPv3 Ethernet Pseudowire Commands . . . . . 3597**
Introduction . . . . . 3597
interface tunnel (L2TPv3) . . . . . 3598
l2tp unmanaged port . . . . . 3599
show interface tunnel (L2TPv3) . . . . . 3600
tunnel destination (L2TPv3) . . . . . 3601
tunnel df . . . . . 3603
tunnel local id . . . . . 3604
tunnel mode l2tp v3 . . . . . 3605
tunnel protection ipsec . . . . . 3606
tunnel remote id . . . . . 3607
tunnel security-reprocessing . . . . . 3608
tunnel source (L2TPv3) . . . . . 3609

**Chapter 79: Transitioning IPv4 to IPv6 Commands . . . . . 3611**
Introduction . . . . . 3611
br-address (softwire) . . . . . 3613
mesh-mode . . . . . 3614
method (softwire) . . . . . 3615
rule (softwire) . . . . . 3616
show running-config softwire-configuration . . . . . 3618
show softwire-configuration . . . . . 3619
softwire-configuration . . . . . 3621
tunnel security-reprocessing . . . . . 3622
tunnel destination (DS-Lite) . . . . . 3623
tunnel mode ds-lite . . . . . 3624
tunnel mode lw4o6 . . . . . 3625
tunnel mode map-e . . . . . 3626
tunnel softwire . . . . . 3627
upstream-interface . . . . . 3628

**Chapter 80: IPv6 Tunneling Commands . . . . . 3629**
Introduction . . . . . 3629
interface tunnel (IPv6) . . . . . 3630
ip address (IP Addressing and Protocol) . . . . . 3631
ip tcp adjust-mss . . . . . 3633
ipv6 address . . . . . 3635
ipv6 tcp adjust-mss . . . . . 3637
mtu . . . . . 3639
show interface tunnel (IPv6) . . . . . 3641
tunnel destination (IPv6) . . . . . 3642
tunnel dscp . . . . . 3644
tunnel mode (IPv6) . . . . . 3645
tunnel source (IPv6) . . . . . 3646
tunnel ttl . . . . . 3648

# List of Commands


aaa accounting auth-mac . . . . . 2181
aaa accounting auth-web . . . . . 2183
aaa accounting commands. . . . . 2185
aaa accounting dot1x . . . . . 2187
aaa accounting login. . . . . 2189
aaa accounting update. . . . . 2192
aaa authentication auth-mac. . . . . 2194
aaa authentication auth-web. . . . . 2196
aaa authentication dot1x . . . . . 2198
aaa authentication enable default group tacacs+ . . . . . 2200
aaa authentication enable default local. . . . . .196
aaa authentication enable default local. . . . . 2202
aaa authentication isakmp . . . . . 2203
aaa authentication login . . . . . 2204
aaa authentication openvpn . . . . . 2206
aaa authorization commands . . . . . 2207
aaa authorization commands . . . . . 2323
aaa authorization config-commands . . . . . 2209
aaa authorization config-commands . . . . . 2325
aaa group server. . . . . 2210
aaa local authentication attempts lockout-time. . . . . .197
aaa local authentication attempts lockout-time. . . . . 2212
aaa local authentication attempts max-fail. . . . . .198
aaa local authentication attempts max-fail. . . . . 2213
aaa login fail-delay. . . . . .199

aaa login fail-delay....2214
abr-type....1135
accept-invalid-sslcert....807
accept-lifetime....932
accounting login....2215
action (antivirus)....3339
action (web-control)....3368
activate....444
active (ping-polling)....3219
active (trigger)....3180
address prefix....2928
address range....2930
address-family ipv4 (RIP)....1591
address-family ipv4 (RIP)....934
address-family....1231
address-family....1589
advertisement-interval....2342
ageing-time....525
aggregate-address (IPv6 RIPng)....997
aggregate-address....1233
airtime-fairness enable (wireless-ap-prof-radio)....2650
alert-thresholding....3321
alias (interface)....3015
alliedware-behavior....935
alternate-checksum-mode....2344
antenna (wireless-ap-prof-radio)....2652
antivirus....3341
ap....2653
apn....470
application....3268
application-decision....1566
application-decision....1698
application-proxy ip-filter....2388
application-proxy quarantine-vlan....2389
application-proxy redirect-url....2390

application-proxy threat-protection send-summary.....2392
application-proxy threat-protection.....2391
application-proxy whitelist advertised-address.....2393
application-proxy whitelist enable.....2394
application-proxy whitelist protection tls.....2395
application-proxy whitelist server.....2396
application-proxy whitelist trustpoint (deprecated).....2398
ap-profile (wireless).....2654
ap-profile (wireless-ap).....2655
area authentication ipsec spi.....1136
area authentication.....1028
area default-cost (IPv6 OSPF).....1138
area default-cost.....1027
area encryption ipsec spi esp.....1139
area filter-list.....1029
area nssa.....1030
area range (IPv6 OSPF).....1142
area range.....1032
area stub (IPv6 OSPF).....1144
area stub.....1034
area virtual-link (IPv6 OSPF).....1145
area virtual-link authentication ipsec spi.....1147
area virtual-link encryption ipsec spi.....1149
area virtual-link.....1035
area-link.....2399
arp log.....754
arp opportunistic-nd.....1594
arp opportunistic-nd.....757
arp.....1592
arp.....752
arp-aging-timeout.....751
arp-reply-bc-dmac.....759
atmf area password.....2406
atmf area.....2404
atmf authorize provision.....2410

atmf authorize....2408
atmf backup area-masters delete....2413
atmf backup area-masters enable....2414
atmf backup area-masters now....2415
atmf backup area-masters synchronize....2416
atmf backup bandwidth....2417
atmf backup delete....2418
atmf backup enable....2419
atmf backup guests delete....2420
atmf backup guests enable....2421
atmf backup guests now....2422
atmf backup guests synchronize....2423
atmf backup now....2424
atmf backup redundancy enable....2426
atmf backup server....2427
atmf backup stop....2429
atmf backup synchronize....2430
atmf backup....2412
atmf cleanup....2431
atmf container login....2433
atmf container....2432
atmf controller....2434
atmf distribute firmware....2435
atmf domain vlan....2437
atmf enable....2440
atmf group (membership)....2441
atmf guest-class....2443
atmf log-verbose....2445
atmf management subnet....2446
atmf management vlan....2449
atmf master....2451
atmf mtu....2452
atmf network-name....2453
atmf provision (interface)....2454
atmf provision node....2455

atmf reboot-rolling . . . . . 2457
atmf recover guest. . . . . 2463
atmf recover led-off. . . . . 2464
atmf recover over-eth. . . . . 2465
atmf recover. . . . . 2461
atmf recovery-server. . . . . 2466
atmf remote-login . . . . . 2468
atmf restricted-login. . . . . 2470
atmf retry guest-link . . . . . 2472
atmf secure-mode certificate expire . . . . . 2475
atmf secure-mode certificate expiry . . . . . 2476
atmf secure-mode certificate renew . . . . . 2477
atmf secure-mode enable-all. . . . . 2478
atmf secure-mode . . . . . 2473
atmf select-area . . . . . 2480
atmf topology-gui enable. . . . . 134
atmf topology-gui enable. . . . . 2481
atmf trustpoint . . . . . 2482
atmf virtual-crosslink . . . . . 2484
atmf virtual-link description. . . . . 2489
atmf virtual-link protection . . . . . 2490
atmf virtual-link . . . . . 2486
atmf working-set . . . . . 2492
atmf-arealink . . . . . 2401
atmf-link . . . . . 2403
attribute . . . . . 2257
auth auth-fail vlan . . . . . 2069
auth critical. . . . . 2071
auth dhcp-framed-ip-lease. . . . . 2072
auth dynamic-vlan-creation. . . . . 2074
auth guest-vlan forward . . . . . 2078
auth guest-vlan. . . . . 2076
auth host-mode . . . . . 2080
auth log . . . . . 2082
auth max-supplicant. . . . . 2084

auth multi-vlan-session . . . . . 2086
auth priority . . . . . 2087
auth profile (global). . . . . 2089
auth profile (interface) . . . . . 2090
auth reauthentication. . . . . 2091
auth roaming disconnected. . . . . 2092
auth roaming enable . . . . . 2094
auth supplicant-ip . . . . . 2096
auth supplicant-mac. . . . . 2098
auth timeout connect-timeout . . . . . 2101
auth timeout quiet-period . . . . . 2103
auth timeout reauth-period . . . . . 2104
auth timeout server-timeout . . . . . 2106
auth timeout supp-timeout . . . . . 2108
auth two-step enable . . . . . 2109
auth two-step order . . . . . 2111
authentication (wireless-sec-wep). . . . . 2656
authentication. . . . . 2259
auth-mac accounting . . . . . 2113
auth-mac authentication. . . . . 2114
auth-mac enable . . . . . 2115
auth-mac method . . . . . 2117
auth-mac password. . . . . 2119
auth-mac reauth-relearning. . . . . 2120
auth-mac static . . . . . 2121
auth-mac username . . . . . 2122
authorization commands . . . . . 2216
authorization commands . . . . . 2326
auth-web accounting . . . . . 2123
auth-web authentication . . . . . 2124
auth-web enable . . . . . 2125
auth-web forward . . . . . 2127
auth-web idle-timeout enable . . . . . 2130
auth-web idle-timeout timeout . . . . . 2131
auth-web max-auth-fail . . . . . 2132

auth-web method . . . . . 2134
auth-web-server dhcp ipaddress . . . . . 2135
auth-web-server dhcp lease . . . . . 2136
auth-web-server dhcp-wpad-option . . . . . 2137
auth-web-server host-name . . . . . 2138
auth-web-server intercept-port . . . . . 2139
auth-web-server ipaddress . . . . . 2140
auth-web-server login-url . . . . . 2142
auth-web-server page language . . . . . 2141
auth-web-server page logo . . . . . 2143
auth-web-server page sub-title . . . . . 2144
auth-web-server page success-message . . . . . 2145
auth-web-server page title . . . . . 2146
auth-web-server page welcome-message . . . . . 2147
auth-web-server ping-poll enable . . . . . 2148
auth-web-server ping-poll failcount . . . . . 2149
auth-web-server ping-poll interval . . . . . 2150
auth-web-server ping-poll reauth-timer-refresh . . . . . 2151
auth-web-server ping-poll timeout . . . . . 2152
auth-web-server port . . . . . 2153
auth-web-server redirect-delay-time . . . . . 2154
auth-web-server redirect-url . . . . . 2155
auth-web-server session-keep . . . . . 2156
auth-web-server ssl intercept-port . . . . . 2158
auth-web-server ssl . . . . . 2157
autoboot enable . . . . . 146
auto-cost reference bandwidth (IPv6 OSPF) . . . . . 1152
auto-cost reference bandwidth . . . . . 1038
auto-discovery disable . . . . . 2657
auto-summary (BGP only) . . . . . 1236
backpressure . . . . . 491
band . . . . . 2658
band-steering (wireless-network) . . . . . 2659
bandwidth (wireless-ap-prof-radio) . . . . . 2660
bandwidth . . . . . 1040

bandwidth ..... 1154
banner exec ..... 264
banner login (SSH) ..... 3128
banner login (system) ..... 266
banner motd ..... 268
bcast-key-refresh-interval (wireless-sec-wpa-ent) ..... 2661
bcast-key-refresh-interval (wireless-sec-wpa-psnl) ..... 2662
bgp aggregate-nexthop-check ..... 1238
bgp always-compare-med ..... 1239
bgp bestpath as-path ignore ..... 1241
bgp bestpath compare-confed-aspath ..... 1242
bgp bestpath compare-routerid ..... 1243
bgp bestpath med remove-recv-med ..... 1246
bgp bestpath med remove-send-med ..... 1247
bgp bestpath med ..... 1244
bgp client-to-client reflection ..... 1248
bgp cluster-id ..... 1249
bgp confederation identifier ..... 1251
bgp confederation peers ..... 1252
bgp config-type ..... 1254
bgp dampening ..... 1256
bgp damp-peer-oscillation (BGP only) ..... 1258
bgp default ipv4-unicast ..... 1259
bgp default local-preference (BGP only) ..... 1260
bgp deterministic-med ..... 1261
bgp enforce-first-as ..... 1263
bgp fast-external-failover ..... 1264
bgp graceful-restart graceful-reset ..... 1267
bgp graceful-restart ..... 1265
bgp log-neighbor-changes ..... 1268
bgp memory maxallocation ..... 1270
bgp nexthop-trigger delay ..... 1272
bgp nexthop-trigger enable ..... 1273
bgp nexthop-trigger-count ..... 1271
bgp rfc1771-path-select (BGP only) ..... 1274

bgp rfc1771-strict (BGP only) . . . . . 1275
bgp router-id . . . . . 1276
bgp scan-time (BGP only) . . . . . 1278
bgp update-delay . . . . . 1279
blacklist . . . . . 3353
boot config-file backup . . . . . 149
boot config-file . . . . . 147
boot system backup . . . . . 152
boot system . . . . . 150
bootfile . . . . . 2857
br-address (softwire) . . . . . 3613
bridge . . . . . 526
bridge-group . . . . . 2494
bridge-group . . . . . 527
browser-only (web-redirect) . . . . . 251
bypass-web-control entity . . . . . 3369
capability opaque . . . . . 1041
capability restart . . . . . 1042
captive-portal virtual-ip . . . . . 2664
captive-portal . . . . . 2663
category (web-control) . . . . . 3371
category action (IP Reputation) . . . . . 3407
category action (IPS) . . . . . 3322
cb-channel . . . . . 2665
cd . . . . . 153
channel (wireless-ap-radio) . . . . . 2668
channel-blanket . . . . . 2667
channel-group . . . . . 647
channels (wireless-ap-prof-radio) . . . . . 2666
chat-script . . . . . 472
cid . . . . . 473
ciphers (wireless-sec-wpa-ent) . . . . . 2669
ciphers (wireless-sec-wpa-psnl) . . . . . 2670
circuit-failover . . . . . 2345
cisco-metric-behavior (RIP) . . . . . 937

class (htb) . . . . . 1986
class (priority) . . . . . 1988
class (wrr) . . . . . 1990
clear aaa local user lockout. . . . . 200
clear aaa local user lockout. . . . . 2218
clear application-proxy threat-protection. . . . . 2495
clear arp-cache . . . . . 1596
clear arp-cache . . . . . 760
clear atmf links statistics . . . . . 2498
clear atmf links virtual . . . . . 2497
clear atmf links . . . . . 2496
clear atmf recovery-file . . . . . 2499
clear atmf secure-mode certificates . . . . . 2500
clear atmf secure-mode statistics. . . . . 2501
clear bgp (ASN) . . . . . 1283
clear bgp (IPv4 or IPv6 address) . . . . . 1281
clear bgp * . . . . . 1280
clear bgp external . . . . . 1284
clear bgp ipv6 (ASN) (BGP4+ only). . . . . 1289
clear bgp ipv6 (ipv6 address) (BGP4+ only) . . . . . 1286
clear bgp ipv6 dampening (BGP4+ only). . . . . 1287
clear bgp ipv6 external (BGP4+ only) . . . . . 1290
clear bgp ipv6 flap-statistics (BGP4+ only) . . . . . 1288
clear bgp ipv6 peer-group (BGP4+ only). . . . . 1291
clear bgp peer-group . . . . . 1285
clear counter ipv6 dhcp-client. . . . . 2932
clear counter ipv6 dhcp-server . . . . . 2933
clear exception log . . . . . 349
clear fiber-monitoring interface . . . . . 325
clear firewall connections . . . . . 3245
clear ip bgp (ASN) (BGP only). . . . . 1298
clear ip bgp (IPv4) (BGP only). . . . . 1294
clear ip bgp (IPv4) (BGP only). . . . . 1600
clear ip bgp * (BGP only) . . . . . 1292
clear ip bgp * (BGP only) . . . . . 1598

clear ip bgp dampening (BGP only) . . . . . 1296
clear ip bgp external (BGP only) . . . . . 1299
clear ip bgp flap-statistics (BGP only) . . . . . 1297
clear ip bgp peer-group (BGP only) . . . . . 1300
clear ip dhcp binding . . . . . 2858
clear ip dns forwarding cache . . . . . 808
clear ip igmp group . . . . . 1753
clear ip igmp interface . . . . . 1754
clear ip igmp . . . . . 1752
clear ip mroute pim sparse-mode . . . . . 1871
clear ip mroute statistics . . . . . 1836
clear ip mroute . . . . . 1835
clear ip ospf process . . . . . 1043
clear ip pim sparse-mode bsr rp-set * . . . . . 1869
clear ip pim sparse-mode packet statistics . . . . . 1870
clear ip prefix-list . . . . . 1301
clear ip rip route . . . . . 1602
clear ip rip route . . . . . 938
clear ipv6 dhcp binding . . . . . 2934
clear ipv6 dhcp client . . . . . 2936
clear ipv6 mld group . . . . . 1806
clear ipv6 mld interface . . . . . 1807
clear ipv6 mld . . . . . 1805
clear ipv6 mroute pim sparse-mode . . . . . 1924
clear ipv6 mroute pim . . . . . 1923
clear ipv6 mroute statistics . . . . . 1838
clear ipv6 mroute . . . . . 1837
clear ipv6 neighbors . . . . . 862
clear ipv6 ospf process . . . . . 1155
clear ipv6 pim sparse-mode bsr rp-set * . . . . . 1925
clear ipv6 rip route . . . . . 998
clear isakmp sa . . . . . 3469
clear lacp counters . . . . . 649
clear line console . . . . . 201
clear line vty . . . . . 202

clear lldp statistics . . . . . 3057
clear lldp table. . . . . 3058
clear log buffered. . . . . 351
clear log external . . . . . 352
clear log permanent . . . . . 353
clear log. . . . . 350
clear mac address-table dynamic. . . . . 493
clear mac address-table static . . . . . 494
clear mac-filter counter . . . . . 529
clear ping-poll . . . . . 3220
clear port counter . . . . . 495
clear pppoe-ac statistics . . . . . 717
clear radius local-server statistics . . . . . 2265
clear snmp-discovery . . . . . 2840
clear spanning-tree detected protocols (RSTP and MSTP) . . . . . 576
clear spanning-tree statistics . . . . . 575
clear ssh . . . . . 3129
client (pppoe-relay). . . . . 718
client (radsecproxy-srv) . . . . . 2260
client mutual-authentication. . . . . 2262
client name-check . . . . . 2263
client trustpoint . . . . . 2264
clock set. . . . . 270
clock summer-time date . . . . . 271
clock summer-time recurring . . . . . 273
clock timezone . . . . . 275
clone (amf-provision) . . . . . 2502
community read-only (wireless-ap-prof-snmp) . . . . . 2671
community trap (wireless-ap-prof-snmp) . . . . . 2672
compatible rfc1583 . . . . . 1044
configure boot config (amf-provision) . . . . . 2504
configure boot system (amf-provision) . . . . . 2506
configure terminal . . . . . 123
connection-limit (firewall). . . . . 3246
connection-log events . . . . . 3248

connection-log events . . . . . 354
consecutive probe loss. . . . . 1700
control-vlan . . . . . 2673
copy (amf-provision). . . . . 2508
copy (filename) . . . . . 154
copy buffered-log . . . . . 355
copy debug . . . . . 156
copy fdb-radius-users (to file) . . . . . 2266
copy local-radius-user-db (from file) . . . . . 2268
copy local-radius-user-db (to file) . . . . . 2269
copy permanent-log . . . . . 356
copy proxy-autoconfig-file . . . . . 2159
copy running-config . . . . . 157
copy startup-config . . . . . 158
copy web-auth-https-file. . . . . 2160
copy zmodem . . . . . 159
counters detailed . . . . . 3394
country-code . . . . . 2674
create (amf-provision) . . . . . 2509
create autoboot . . . . . 160
critical-interval . . . . . 3221
crypto ipsec profile . . . . . 3470
crypto isakmp key . . . . . 3472
crypto isakmp peer . . . . . 3475
crypto isakmp profile . . . . . 3477
crypto key destroy hostkey. . . . . 3130
crypto key destroy userkey. . . . . 3131
crypto key generate hostkey . . . . . 3132
crypto key generate rsa . . . . . 2297
crypto key generate userkey . . . . . 3134
crypto key pubkey-chain knownhosts . . . . . 1604
crypto key pubkey-chain knownhosts . . . . . 3135
crypto key pubkey-chain userkey. . . . . 3137
crypto key zeroize . . . . . 2298
crypto pki authenticate . . . . . 2299

crypto pki enroll local (deleted) ..... 2270
crypto pki enroll local local-radius-all-users (deleted) ..... 2271
crypto pki enroll local user (deleted) ..... 2272
crypto pki enroll user ..... 2301
crypto pki enroll ..... 2300
crypto pki export local pem (deleted) ..... 2273
crypto pki export local pkcs12 (deleted) ..... 2274
crypto pki export pem ..... 2303
crypto pki export pkcs12 ..... 2304
crypto pki import pem ..... 2306
crypto pki import pkcs12 ..... 2308
crypto pki trustpoint local (deleted) ..... 2275
crypto pki trustpoint ..... 2309
cut-through ..... 496
day (wireless-task) ..... 2675
day ..... 3181
ddns enable ..... 809
ddns-update now ..... 811
ddns-update-method ..... 810
deadtime (RADIUS server group) ..... 2236
debug aaa ..... 2219
debug antivirus ..... 3342
debug atmf packet ..... 2513
debug atmf ..... 2511
debug bgp (BGP only) ..... 1302
debug core-file ..... 276
debug crypto pki (deleted) ..... 2276
debug ddns ..... 812
debug dot1x ..... 2035
debug fiber-monitoring ..... 326
debug firewall ..... 3250
debug igmp ..... 1755
debug ip dns forwarding ..... 813
debug ip packet interface ..... 762
debug ipv6 ospf events ..... 1156

debug ipv6 ospf ifsm ....1157
debug ipv6 ospf lsa ....1158
debug ipv6 ospf nfsm ....1159
debug ipv6 ospf packet ....1160
debug ipv6 ospf route ....1161
debug ipv6 pim sparse-mode packet ....1928
debug ipv6 pim sparse-mode timer ....1929
debug ipv6 pim sparse-mode ....1926
debug ipv6 rip ....999
debug isakmp ....3479
debug l2tp ....3566
debug lacp ....650
debug linkmon ....1702
debug lldp ....3059
debug mail ....3113
debug mld ....1808
debug mstp (RSTP and STP) ....577
debug nsm mcast ....1840
debug nsm mcast6 ....1841
debug nsm ....1839
debug ospf events ....1045
debug ospf ifsm ....1046
debug ospf lsa ....1047
debug ospf nfsm ....1048
debug ospf nsm ....1049
debug ospf packet ....1050
debug ospf route ....1051
debug pim sparse-mode timer ....1873
debug pim sparse-mode ....1872
debug ping-poll ....3222
debug platform packet ....497
debug policy-based-routing ....1568
debug ppp ....673
debug pppoe-ac ....719
debug radius ....2237

debug rip . . . . . 940
debug snmp. . . . . 3016
debug ssh client . . . . . 3139
debug ssh server . . . . . 3140
debug traffic-control. . . . . 1992
debug trigger . . . . . 3183
debug vrrp events . . . . . 2348
debug vrrp packet . . . . . 2349
debug vrrp . . . . . 2347
debug web-control . . . . . 3373
debug wireless . . . . . 2676
default log buffered . . . . . 357
default log console . . . . . 358
default log email . . . . . 359
default log external . . . . . 360
default log host. . . . . 361
default log monitor . . . . . 362
default log permanent . . . . . 363
default-action . . . . . 530
default-information originate (IPv6 RIPng) . . . . . 1000
default-information originate (RIP) . . . . . 941
default-information originate . . . . . 1052
default-information originate . . . . . 1162
default-metric (IPv6 OSPF) . . . . . 1163
default-metric (IPv6 RIPng). . . . . 1001
default-metric (OSPF) . . . . . 1053
default-metric (RIP) . . . . . 1606
default-metric (RIP) . . . . . 942
default-protocol-action . . . . . 532
default-router . . . . . 2859
delete (amf-provision) . . . . . 2516
delete debug . . . . . 162
delete mail . . . . . 3114
delete . . . . . 161
description (amf-container) . . . . . 2520

description (auth-profile) . . . . . 2161
description (Domain List) . . . . . 814
description (interface) . . . . . 448
description (ping-polling) . . . . . 3223
description (trigger) . . . . . 3184
description (VRF) . . . . . 1607
description (wireless-ap) . . . . . 2678
description (wireless-ap-prof) . . . . . 2679
description (wireless-mac-flt) . . . . . 2680
description (wireless-network) . . . . . 2681
description (wireless-sc-prof) . . . . . 2682
description (wireless-task) . . . . . 2683
designated-ap . . . . . 2684
destination (linkmon-probe) . . . . . 1704
destination l2tp . . . . . 720
destination . . . . . 3567
dir . . . . . 163
disable (Privileged Exec mode) . . . . . 124
disable (VRRP) . . . . . 2350
discovery . . . . . 2518
distance (BGP and BGP4+) . . . . . 1304
distance (IPv6 OSPF) . . . . . 1164
distance (OSPF) . . . . . 1054
distance (RIP) . . . . . 1608
distance (RIP) . . . . . 943
distribute-list (IPv6 RIPng) . . . . . 1002
distribute-list (OSPF) . . . . . 1056
distribute-list (RIP) . . . . . 1609
distribute-list (RIP) . . . . . 944
dns-server (DHCPv6) . . . . . 2937
dns-server . . . . . 2860
do . . . . . 125
domain (Domain List) . . . . . 815
domain-name (DHCPv6) . . . . . 2939
domain-name . . . . . 2861

domain-style . . . . . 2277
dot1x accounting . . . . . 2033
dot1x authentication . . . . . 2034
dot1x control-direction . . . . . 2036
dot1x eap . . . . . 2038
dot1x eapol-version . . . . . 2039
dot1x initialize interface . . . . . 2040
dot1x initialize supplicant . . . . . 2041
dot1x keytransmit . . . . . 2042
dot1x max-auth-fail . . . . . 2043
dot1x max-reauth-req . . . . . 2045
dot1x port-control . . . . . 2047
dot1x timeout tx-period . . . . . 2049
dpd-interval . . . . . 3481
dpd-timeout . . . . . 3482
dpi . . . . . 3395
dport . . . . . 3270
dscp (linkmon-probe) . . . . . 1706
dscp . . . . . 3272
duplex . . . . . 499
echo . . . . . 445
edit (filename) . . . . . 166
edit . . . . . 165
egress interface (linkmon-probe) . . . . . 1707
egress-vlan-id . . . . . 2278
egress-vlan-name . . . . . 2279
emergency-mode . . . . . 2686
enable (dpi) . . . . . 3396
enable (linkmon-probe) . . . . . 1708
enable (nat) . . . . . 3304
enable (Privileged Exec mode) . . . . . 126
enable (VRRP) . . . . . 2351
enable (web-redirect) . . . . . 252
enable (wireless) . . . . . 2687
enable (wireless-ap) . . . . . 2688

enable (wireless-ap-prof-radio) . . . . . 2689
enable (wireless-ap-prof-snmp) . . . . . 2685
enable (wireless-network-cp) . . . . . 2690
enable (wireless-sec-wep) . . . . . 2691
enable (wireless-task) . . . . . 2692
enable (wireless-wds) . . . . . 2693
enable db-summary-opt . . . . . 1058
enable password . . . . . 203
enable secret (deprecated) . . . . . 206
encapsulation dot1q . . . . . 669
encapsulation ppp . . . . . 3568
encapsulation ppp . . . . . 474
encapsulation ppp . . . . . 676
end . . . . . 128
endpoint-source . . . . . 3421
enrollment (ca-trustpoint) . . . . . 2310
entry (endpoint-manual) . . . . . 3423
erase factory-default . . . . . 167
erase factory-default . . . . . 2521
erase proxy-autoconfig-file . . . . . 2162
erase startup-config . . . . . 168
erase web-auth-https-file . . . . . 2163
exclude ip . . . . . 253
exclude mac . . . . . 254
exclude-entry (endpoint-manual) . . . . . 3425
exclude-entry (endpoint-office365) . . . . . 3427
exec-timeout . . . . . 207
exit . . . . . 129
exit-address-family . . . . . 1306
export map . . . . . 1610
external-page-url . . . . . 2694
fail-count . . . . . 3224
fiber-monitoring action . . . . . 328
fiber-monitoring baseline . . . . . 330
fiber-monitoring enable . . . . . 332

fiber-monitoring interval....333
fiber-monitoring sensitivity....334
filter-endpoint include all....3432
filter-endpoint....3429
filter-entry exclude type....3436
filter-entry exclude....3434
filter-entry....2695
fingerprint (ca-trustpoint)....2311
firewall....3249
flowcontrol (switch port)....500
flowcontrol hardware (asyn/console)....209
force-disable (wireless-ap-radio)....2697
fullupdate (RIP)....1611
fullupdate (RIP)....945
group....2280
ha associate....2337
help radius-attribute....2282
help....130
hide-ssid (wireless-network)....2698
host (DHCP)....2862
host (network)....3274
host area....1059
host-name (DDNS)....816
hostname....277
http log webapi-requests....135
http port....136
http secure-port....137
http-enable....2522
hwtype....2699
icmp-code....3276
icmp-type....3278
identity (amf-provision)....2524
idle-time (web-redirect)....255
import map....1612
index....2701

initialization-button enable . . . . . 2702
instance priority (MSTP) . . . . . 581
instance vlan (MSTP) . . . . . 583
interface (PPP) . . . . . 678
interface (to configure) . . . . . 449
interface (traffic-control) . . . . . 1993
interface tunnel (GRE) . . . . . 3524
interface tunnel (IPsec) . . . . . 3483
interface tunnel (IPv6) . . . . . 3630
interface tunnel (L2TPv3) . . . . . 3598
interval (linkmon-probe) . . . . . 1709
ip (ping-polling) . . . . . 3225
ip address (host) . . . . . 3280
ip address (IP Addressing and Protocol) . . . . . 3631
ip address (IP Addressing and Protocol) . . . . . 764
ip address dhcp . . . . . 2863
ip address negotiated . . . . . 679
ip community-list expanded . . . . . 1309
ip community-list standard . . . . . 1311
ip community-list . . . . . 1307
ip ddns-update-method . . . . . 817
ip dhcp bootp ignore . . . . . 2865
ip dhcp leasequery enable . . . . . 2866
ip dhcp option . . . . . 2867
ip dhcp pool . . . . . 2869
ip dhcp-client default-route distance . . . . . 2870
ip dhcp-client request vendor-identifying-specific . . . . . 2872
ip dhcp-client vendor-identifying-class . . . . . 2873
ip dhcp-relay agent-option checking . . . . . 2876
ip dhcp-relay agent-option checking . . . . . 2942
ip dhcp-relay agent-option remote-id . . . . . 2878
ip dhcp-relay agent-option remote-id . . . . . 2944
ip dhcp-relay agent-option . . . . . 2874
ip dhcp-relay agent-option . . . . . 2940
ip dhcp-relay information policy . . . . . 2880

ip dhcp-relay information policy .....2946
ip dhcp-relay maxhops .....2882
ip dhcp-relay maxhops .....2948
ip dhcp-relay max-message-length.....2883
ip dhcp-relay max-message-length.....2949
ip dhcp-relay server-address .....2885
ip dhcp-relay server-address .....2951
ip dhcp-relay use-client-side-address.....2887
ip directed-broadcast.....766
ip dns forwarding cache .....819
ip dns forwarding dead-time.....821
ip dns forwarding domain-list.....822
ip dns forwarding retry .....823
ip dns forwarding source-interface .....824
ip dns forwarding timeout .....825
ip dns forwarding.....818
ip domain-list.....826
ip domain-lookup .....827
ip domain-name.....829
ip extcommunity-list expanded .....1313
ip extcommunity-list standard .....1315
ip forwarding.....768
ip forward-protocol udp .....769
ip gratuitous-arp-link .....771
ip helper-address.....773
ip icmp error-interval .....775
ip igmp flood specific-query .....1757
ip igmp last-member-query-count .....1758
ip igmp last-member-query-interval.....1759
ip igmp maximum-groups .....1760
ip igmp mroute-proxy .....1762
ip igmp proxy-service.....1763
ip igmp querier-timeout .....1765
ip igmp query-holdtime .....1766
ip igmp query-interval .....1768

ip igmp query-max-response-time .....1770
ip igmp ra-option.....1772
ip igmp robustness-variable .....1773
ip igmp snooping fast-leave.....1775
ip igmp snooping mrouter .....1776
ip igmp snooping querier .....1777
ip igmp snooping report-suppression .....1778
ip igmp snooping routermode .....1779
ip igmp snooping source-timeout.....1781
ip igmp snooping tcn query solicit .....1782
ip igmp snooping.....1774
ip igmp source-address-check .....1784
ip igmp startup-query-count.....1785
ip igmp startup-query-interval .....1786
ip igmp trusted.....1787
ip igmp version.....1788
ip igmp.....1756
ip limited-local-proxy-arp .....3305
ip limited-local-proxy-arp .....776
ip local-proxy-arp.....778
ip mroute .....1842
ip multicast route.....1844
ip multicast route-limit.....1846
ip multicast wrong-vif-suppression.....1847
ip multicast-routing .....1848
ip name-server preferred-order .....832
ip name-server .....830
ip ospf authentication .....1060
ip ospf authentication-key .....1061
ip ospf cost.....1063
ip ospf database-filter.....1064
ip ospf dead-interval.....1065
ip ospf disable all .....1066
ip ospf hello-interval.....1067
ip ospf message-digest-key .....1068

ip ospf mtu . . . . . 1070
ip ospf mtu-ignore . . . . . 1071
ip ospf network . . . . . 1072
ip ospf priority . . . . . 1073
ip ospf resync-timeout . . . . . 1074
ip ospf retransmit-interval . . . . . 1075
ip ospf transmit-delay . . . . . 1076
ip pim anycast-rp . . . . . 1875
ip pim bsr-border . . . . . 1876
ip pim bsr-candidate . . . . . 1877
ip pim cisco-register-checksum . . . . . 1878
ip pim crp-cisco-prefix . . . . . 1879
ip pim dr-priority . . . . . 1880
ip pim exclude-genid . . . . . 1881
ip pim ext-srcs-directly-connected . . . . . 1882
ip pim hello-holdtime (PIM-SM) . . . . . 1883
ip pim hello-interval (PIM-SM) . . . . . 1884
ip pim ignore-rp-set-priority . . . . . 1885
ip pim jp-timer . . . . . 1886
ip pim register-rate-limit . . . . . 1887
ip pim register-rp-reachability . . . . . 1888
ip pim register-source . . . . . 1889
ip pim register-suppression . . . . . 1890
ip pim rp-address . . . . . 1891
ip pim rp-candidate . . . . . 1893
ip pim rp-register-kat . . . . . 1894
ip pim sparse-mode join-prune-batching . . . . . 1896
ip pim sparse-mode passive . . . . . 1898
ip pim sparse-mode wrong-vif-suppression . . . . . 1899
ip pim sparse-mode . . . . . 1895
ip pim spt-threshold . . . . . 1901
ip pim ssm . . . . . 1902
ip policy-route . . . . . 1569
ip policy-route . . . . . 1710
ip prefix-list . . . . . 1317

ip prefix-list. . . . . 947
ip proxy-arp . . . . . 779
ip radius source-interface . . . . . 2238
ip redirects . . . . . 780
ip rip authentication key-chain . . . . . 949
ip rip authentication mode. . . . . 951
ip rip authentication string. . . . . 954
ip rip receive version. . . . . 957
ip rip receive-packet . . . . . 956
ip rip send version 1-compatible . . . . . 962
ip rip send version . . . . . 959
ip rip send-packet . . . . . 958
ip rip split-horizon . . . . . 964
ip route static inter-vrf . . . . . 1613
ip route . . . . . 1614
ip route . . . . . 910
ip subnet . . . . . 3282
ip summary-address rip . . . . . 946
ip tacacs source-interface . . . . . 2328
ip tcp adjust-mss . . . . . 3547
ip tcp adjust-mss . . . . . 3633
ip tcp adjust-mss . . . . . 451
ip tcp adjust-mss . . . . . 681
ip tcp synack-retries . . . . . 781
ip tcp timeout established . . . . . 3251
ip tcp timeout established . . . . . 782
ip tftp source-interface. . . . . 169
ip unnumbered. . . . . 683
ip unreachables . . . . . 783
ip vrf forwarding. . . . . 1618
ip vrf . . . . . 1617
ip-address (wireless-ap) . . . . . 2703
ip-reputation . . . . . 3409
ips . . . . . 3323
ipv6 address (DHCPv6 PD) . . . . . 2953

ipv6 address (host) ..... 3284
ipv6 address autoconfig ..... 865
ipv6 address dhcp ..... 2956
ipv6 address suffix ..... 867
ipv6 address ..... 3635
ipv6 address ..... 863
ipv6 ddns-update-method ..... 833
ipv6 dhcp client pd ..... 2958
ipv6 dhcp option ..... 2960
ipv6 dhcp pool ..... 2962
ipv6 dhcp server ..... 2964
ipv6 enable ..... 868
ipv6 eui64-linklocal ..... 870
ipv6 forwarding ..... 871
ipv6 icmp error-interval ..... 872
ipv6 local pool ..... 2965
ipv6 mld last-member-query-count ..... 1810
ipv6 mld last-member-query-interval ..... 1811
ipv6 mld querier-timeout ..... 1812
ipv6 mld query-interval ..... 1813
ipv6 mld query-max-response-time ..... 1814
ipv6 mld robustness-variable ..... 1815
ipv6 mld snooping fast-leave ..... 1818
ipv6 mld snooping mrouter ..... 1819
ipv6 mld snooping querier ..... 1821
ipv6 mld snooping report-suppression ..... 1822
ipv6 mld snooping ..... 1816
ipv6 mld ssm-map enable ..... 1824
ipv6 mld static-group ..... 1825
ipv6 mld version ..... 1827
ipv6 mld ..... 1809
ipv6 mroute ..... 1849
ipv6 multicast forward-slow-path-packet ..... 873
ipv6 multicast route ..... 1851
ipv6 multicast route-limit ..... 1853

ipv6 multicast-routing .....1854
ipv6 multihoming .....874
ipv6 nd accept-ra-default-routes .....875
ipv6 nd accept-ra-pinfo .....876
ipv6 nd current-hoplimit .....877
ipv6 nd managed-config-flag .....879
ipv6 nd minimum-ra-interval .....880
ipv6 nd other-config-flag .....882
ipv6 nd prefix (DHCPv6) .....2967
ipv6 nd prefix .....883
ipv6 nd proxy interface .....885
ipv6 nd ra-interval .....887
ipv6 nd ra-lifetime .....888
ipv6 nd reachable-time .....889
ipv6 nd retransmission-time .....891
ipv6 nd suppress-ra .....893
ipv6 neighbor .....894
ipv6 opportunistic-nd .....895
ipv6 ospf authentication spi .....1166
ipv6 ospf cost .....1168
ipv6 ospf dead-interval .....1170
ipv6 ospf display route single-line .....1171
ipv6 ospf encryption spi esp .....1172
ipv6 ospf hello-interval .....1175
ipv6 ospf neighbor .....1176
ipv6 ospf network .....1178
ipv6 ospf priority .....1179
ipv6 ospf retransmit-interval .....1180
ipv6 ospf transmit-delay .....1181
ipv6 pim anycast-rp .....1931
ipv6 pim bsr-border .....1933
ipv6 pim bsr-candidate .....1935
ipv6 pim cisco-register-checksum .....1937
ipv6 pim crp-cisco-prefix .....1938
ipv6 pim dr-priority .....1939

ipv6 pim exclude-genid . . . . . 1941
ipv6 pim ext-srcs-directly-connected . . . . . 1942
ipv6 pim hello-holdtime . . . . . 1943
ipv6 pim hello-interval . . . . . 1944
ipv6 pim ignore-rp-set-priority . . . . . 1945
ipv6 pim jp-timer . . . . . 1946
ipv6 pim neighbor-filter . . . . . 1947
ipv6 pim register-rate-limit . . . . . 1948
ipv6 pim register-rp-reachability . . . . . 1949
ipv6 pim register-source . . . . . 1950
ipv6 pim register-suppression . . . . . 1951
ipv6 pim rp embedded . . . . . 1955
ipv6 pim rp-address . . . . . 1952
ipv6 pim rp-candidate . . . . . 1954
ipv6 pim rp-register-kat . . . . . 1956
ipv6 pim sparse-mode passive . . . . . 1958
ipv6 pim sparse-mode . . . . . 1957
ipv6 pim spt-threshold . . . . . 1959
ipv6 pim ssm . . . . . 1960
ipv6 pim unicast-bsm . . . . . 1961
ipv6 policy-route . . . . . 1571
ipv6 policy-route . . . . . 1713
ipv6 prefix-list . . . . . 1003
ipv6 prefix-list . . . . . 1319
ipv6 rip metric-offset . . . . . 1005
ipv6 rip split-horizon . . . . . 1007
ipv6 route . . . . . 896
ipv6 route . . . . . 913
ipv6 router ospf area . . . . . 1182
ipv6 router rip . . . . . 1009
ipv6 subnet . . . . . 3286
ipv6 tcp adjust-mss . . . . . 3549
ipv6 tcp adjust-mss . . . . . 3637
ipv6 tcp adjust-mss . . . . . 453
ipv6 tcp adjust-mss . . . . . 685

ipv6 tftp source-interface . . . . . 170
ipv6 unreachables . . . . . 898
ip-version (linkmon-probe). . . . . 1712
ip-version . . . . . 3570
jitter. . . . . 1715
keepalive (PPP) . . . . . 687
key (wireless-sc-prof) . . . . . 2705
key (wireless-sec-wep) . . . . . 2706
key (wireless-sec-wpa-psnl) . . . . . 2708
key chain . . . . . 966
key . . . . . 2704
key . . . . . 965
key-string . . . . . 967
l2tp peer-address dns-lookup . . . . . 721
l2tp peer-address radius-lookup group . . . . . 723
l2tp peer-address static . . . . . 724
l2tp profile . . . . . 726
l2tp tunnel . . . . . 3571
l2tp unmanaged port . . . . . 3573
l2tp unmanaged port . . . . . 3599
l2tp-profile . . . . . 3574
l3-filtering enable. . . . . 1994
l3-filtering enable. . . . . 533
lacp global-passive-mode enable . . . . . 651
lacp port-priority . . . . . 652
lacp system-priority. . . . . 653
lacp timeout. . . . . 654
latency . . . . . 1717
lease . . . . . 2889
led enable . . . . . 2709
length (asyn) . . . . . 211
length (ping-poll data). . . . . 3226
length (wireless-sec-wep) . . . . . 2710
license update file . . . . . 240
license update online . . . . . 241

license-cert (amf-provision) . . . . . 2526
lifetime (IPsec Profile) . . . . . 3484
lifetime (ISAKMP Profile) . . . . . 3485
line. . . . . 212
link-address . . . . . 2969
linkflap action . . . . . 502
linkmon group . . . . . 1719
linkmon probe. . . . . 1722
linkmon probe-history . . . . . 1720
linkmon profile . . . . . 1724
lldp faststart-count . . . . . 3060
lldp holdtime-multiplier . . . . . 3061
lldp management-address . . . . . 3062
lldp med-notifications . . . . . 3063
lldp med-tlv-select. . . . . 3064
lldp non-strict-med-tlv-order-check . . . . . 3067
lldp notification-interval . . . . . 3068
lldp notifications . . . . . 3069
lldp port-number-type. . . . . 3070
lldp reinit. . . . . 3071
lldp run . . . . . 3072
lldp timer. . . . . 3073
lldp tlv-select . . . . . 3074
lldp transmit receive . . . . . 3076
lldp tx-delay . . . . . 3077
load-balancing . . . . . 1725
local authentication . . . . . 3525
local-proxy-arp . . . . . 3307
local-proxy-arp . . . . . 785
local-subaddress . . . . . 3575
locate (amf-provision) . . . . . 2528
location civic-location configuration . . . . . 3078
location civic-location identifier . . . . . 3082
location civic-location-id . . . . . 3083
location coord-location configuration . . . . . 3084

location coord-location identifier .....3086
location coord-location-id .....3087
location elin-location .....3089
location elin-location-id.....3090
log buffered (filter) .....365
log buffered exclude.....368
log buffered size.....371
log buffered .....364
log console (filter) .....373
log console exclude .....376
log console.....372
log date-format.....379
log email (filter).....381
log email exclude.....384
log email time .....387
log email .....380
log enable destination .....2711
log event-host.....138
log event-host.....2530
log external (filter) .....391
log external exclude .....394
log external rotate .....397
log external size .....399
log external .....389
log facility .....400
log host (filter).....404
log host exclude.....407
log host source .....410
log host startup-delay .....411
log host time .....413
log host .....402
log interval neighbor-ap .....2712
log monitor (filter) .....415
log monitor exclude .....418
log permanent (filter) .....422

log permanent exclude . . . . . 425
log permanent size . . . . . 428
log permanent . . . . . 421
log rotate neighbor-ap. . . . . 2713
log rotate wireless-client . . . . . 2714
log size wireless-client . . . . . 2715
log trustpoint. . . . . 430
log url-requests. . . . . 3355
log url-requests. . . . . 431
login authentication . . . . . 2220
login username (wireless-ap). . . . . 2716
login-fallback enable . . . . . 2531
login-password (wireless-ap). . . . . 2717
logout. . . . . 131
log-rate-limit nsm . . . . . 429
mac address-table acquire . . . . . 503
mac address-table ageing-time . . . . . 504
mac address-table static . . . . . 505
mac-address (wireless-ap). . . . . 2718
mac-auth password. . . . . 2719
mac-auth radius auth group (wireless-network). . . . . 2720
mac-auth username . . . . . 2721
mac-filter. . . . . 535
mac-filter-group egress . . . . . 534
mac-filter-group . . . . . 536
mac-learning . . . . . 537
mail from. . . . . 3117
mail smtpserver authentication . . . . . 3119
mail smtpserver port. . . . . 3121
mail smtpserver . . . . . 3118
mail . . . . . 3115
malware-protection . . . . . 3330
management address. . . . . 2723
management-frame-protection enable (wireless-sec-wpa-ent) . . . . . 2724
management-frame-protection enable (wireless-sec-wpa-psnl) . . . . . 2725

match (web-control) . . . . . 3374
match as-path . . . . . 1321
match as-path . . . . . 1525
match community . . . . . 1322
match community . . . . . 1526
match interface . . . . . 1528
match ip address . . . . . 1529
match ip next-hop . . . . . 1531
match ipv6 address . . . . . 1533
match ipv6 next-hop . . . . . 1535
match metric . . . . . 1536
match origin . . . . . 1537
match route-type . . . . . 1539
match tag . . . . . 1540
max-clients . . . . . 2726
max-concurrent-dd (IPv6 OSPF) . . . . . 1184
max-concurrent-dd . . . . . 1077
max-fib-routes (VRF) . . . . . 1619
max-fib-routes . . . . . 279
max-fib-routes . . . . . 915
maximum-area . . . . . 1078
maximum-paths . . . . . 918
maximum-prefix . . . . . 968
max-paths . . . . . 1324
max-sessions . . . . . 728
max-static-routes (VRF) . . . . . 1621
max-static-routes . . . . . 281
max-static-routes . . . . . 917
member (linkmon-group) . . . . . 1726
mesh-mode . . . . . 3614
method (softwire) . . . . . 3615
mirror interface . . . . . 484
mkdir . . . . . 171
mode (wireless-ap-prof-radio) . . . . . 2727
mode (wireless-network-cp) . . . . . 2729

modeltype . . . . . 2532
move debug. . . . . 173
move rule (firewall) . . . . . 3252
move rule (nat) . . . . . 3308
move rule (traffic-control). . . . . 1995
move rule (web-control) . . . . . 3376
move. . . . . 172
mru jumbo . . . . . 455
mtu (PPP) . . . . . 689
mtu . . . . . 3639
mtu . . . . . 456
multicast . . . . . 1855
nas. . . . . 2281
nat . . . . . 3309
neighbor (IPv6 RIPng). . . . . 1010
neighbor (OSPF) . . . . . 1079
neighbor (RIP) . . . . . 969
neighbor activate. . . . . 1325
neighbor advertisement-interval . . . . . 1328
neighbor allowas-in . . . . . 1331
neighbor as-origination-interval . . . . . 1334
neighbor attribute-unchanged. . . . . 1336
neighbor capability graceful-restart . . . . . 1339
neighbor capability orf prefix-list. . . . . 1342
neighbor capability route-refresh . . . . . 1345
neighbor collide-established . . . . . 1348
neighbor default-originate. . . . . 1351
neighbor description . . . . . 1354
neighbor disallow-infinite-holdtime. . . . . 1357
neighbor dont-capability-negotiate . . . . . 1359
neighbor ebgp-multihop . . . . . 1362
neighbor enforce-multihop . . . . . 1365
neighbor filter-list . . . . . 1368
neighbor interface. . . . . 1371
neighbor local-as . . . . . 1372

neighbor maximum-prefix . . . . . 1375
neighbor next-hop-self . . . . . 1378
neighbor next-hop-self . . . . . 1622
neighbor override-capability . . . . . 1381
neighbor passive . . . . . 1383
neighbor password . . . . . 1386
neighbor password . . . . . 1628
neighbor peer-group (add a neighbor) . . . . . 1390
neighbor peer-group (create a peer-group) . . . . . 1392
neighbor port . . . . . 1393
neighbor prefix-list . . . . . 1396
neighbor remote-as . . . . . 1399
neighbor remote-as . . . . . 1625
neighbor remove-private-AS (BGP only) . . . . . 1402
neighbor restart-time . . . . . 1404
neighbor route-map . . . . . 1407
neighbor route-reflector-client (BGP only) . . . . . 1411
neighbor route-server-client (BGP only) . . . . . 1413
neighbor send-community . . . . . 1414
neighbor shutdown . . . . . 1418
neighbor soft-reconfiguration inbound . . . . . 1420
neighbor timers . . . . . 1423
neighbor transparent-as . . . . . 1426
neighbor transparent-nexthop . . . . . 1428
neighbor unsuppress-map . . . . . 1430
neighbor update-source . . . . . 1433
neighbor version (BGP only) . . . . . 1437
neighbor weight . . . . . 1439
network (BGP and BGP4+) . . . . . 1442
network (DHCP) . . . . . 2891
network (RIP) . . . . . 1632
network (RIP) . . . . . 970
network (wireless) . . . . . 2731
network (zone) . . . . . 3288
network area . . . . . 1080

network synchronization.....1445
next-server.....2892
no crypto pki certificate.....2313
no debug all.....282
no debug isakmp.....3486
normal-interval.....3227
ntp authentication-key.....2996
ntp broadcastdelay.....2997
ntp designated-server enable.....2733
ntp designated-server period.....2734
ntp designated-server.....2732
ntp master.....2998
ntp peer.....2999
ntp rate-limit.....3001
ntp restrict.....3002
ntp server.....3004
ntp source.....3006
optimistic-nd.....786
optimistic-nd.....899
option (DHCPv6).....2971
option.....2893
ospf abr-type.....1082
ospf restart grace-period.....1083
ospf restart helper.....1084
ospf router-id.....1086
outdoor.....2735
overflow database external.....1088
overflow database.....1087
pac-file http-server port.....3438
pac-file proxy-address.....3440
pac-file template.....3441
page-proxy-url.....2736
parser-updates enable.....3443
parser-updates interval.....3444
passive-interface (IPv6 OSPF).....1185

passive-interface (IPv6 RIPng) . . . . . 1011
passive-interface (OSPF) . . . . . 1089
passive-interface (RIP) . . . . . 1634
passive-interface (RIP) . . . . . 972
password (DDNS) . . . . . 834
peer (wireless-wds) . . . . . 2737
peer default ip address . . . . . 690
peer neighbor-route . . . . . 692
permit host (wireless-ap-prof-snmp) . . . . . 2738
pfs . . . . . 3487
ping ipv6 . . . . . 900
ping . . . . . 1635
ping . . . . . 787
ping-poll . . . . . 3228
pktloss . . . . . 1728
platform multicast-ratelimit . . . . . 1856
platform multicast-ratelimit . . . . . 506
polarity . . . . . 507
policy (traffic-control) . . . . . 1996
policy-based-routing enable . . . . . 1574
policy-based-routing . . . . . 1573
port (wireless-ap-prof-snmp) . . . . . 2739
power (wireless-ap-radio) . . . . . 2740
ppp authentication refuse . . . . . 696
ppp authentication . . . . . 694
ppp hostname . . . . . 698
ppp ipcp dns suffix-list . . . . . 702
ppp ipcp dns suffix-list . . . . . 837
ppp ipcp dns . . . . . 700
ppp ipcp dns . . . . . 835
ppp ipcp ip-override . . . . . 704
ppp password . . . . . 705
ppp service-name (PPPoE) . . . . . 706
ppp timeout idle . . . . . 707
ppp username . . . . . 708

ppp-auth-protocol . . . . . 729
pppoe-ac . . . . . 730
pppoe-ac-service . . . . . 731
pppoe-relay . . . . . 732
pre-authentication enable (wireless-sec-wpa-ent) . . . . . 2741
preempt-mode . . . . . 2352
preference . . . . . 1730
prefix-delegation pool . . . . . 2973
priority . . . . . 2354
privilege level . . . . . 214
probe enable . . . . . 2895
probe packets . . . . . 2896
probe timeout . . . . . 2897
probe type . . . . . 2898
protect (antivirus) . . . . . 3343
protect (firewall) . . . . . 3253
protect (IP Reputation) . . . . . 3410
protect (IPS) . . . . . 3324
protect (malware) . . . . . 3331
protect (url-filter) . . . . . 3356
protect (web-control) . . . . . 3377
protection ipsec . . . . . 3576
protection local-name . . . . . 3577
protection profile . . . . . 3579
protection remote-name . . . . . 3580
protocol ethii (macfilter) . . . . . 538
protocol novell (macfilter) . . . . . 540
protocol sap (macfilter) . . . . . 542
protocol snap (macfilter) . . . . . 544
protocol . . . . . 3290
provider (dpi) . . . . . 3398
provider digitalarts (web-control) . . . . . 3378
provider kaspersky (antivirus) . . . . . 3344
provider kaspersky (malware) . . . . . 3332
provider kaspersky (url-filter) . . . . . 3357

provider proofpoint (IP Reputation) . . . . . 3411
proxy-auth . . . . . 733
proxy-port. . . . . 2221
pwd . . . . . 174
radio (wireless-ap) . . . . . 2742
radio (wireless-ap-profile) . . . . . 2743
radius accounting enable . . . . . 2744
radius auth group (wireless-network-cp) . . . . . 2745
radius auth group (wireless-sec-wpa-ent). . . . . 2747
radius-secure-proxy aaa. . . . . 2222
radius-secure-proxy local-server. . . . . 2284
radius-server deadtime . . . . . 2239
radius-server host . . . . . 2240
radius-server key . . . . . 2243
radius-server local . . . . . 2285
radius-server retransmit. . . . . 2244
radius-server timeout . . . . . 2246
range . . . . . 2899
rd (route distinguisher) . . . . . 1637
reboot . . . . . 284
receive-packet-scheduler . . . . . 285
recv-buffer-size (IPv6 RIPng) . . . . . 1012
recv-buffer-size (RIP) . . . . . 973
red-curve. . . . . 1998
redirect-url . . . . . 2748
redistribute (into BGP or BGP4+) . . . . . 1446
redistribute (into BGP or BGP4+) . . . . . 1638
redistribute (IPv6 OSPF). . . . . 1186
redistribute (IPv6 RIPng) . . . . . 1013
redistribute (OSPF) . . . . . 1090
redistribute (OSPF) . . . . . 1640
redistribute (RIP). . . . . 1642
redistribute (RIP). . . . . 974
region (MSTP) . . . . . 585
rekey . . . . . 3489

reload . . . . . 287
remote authentication . . . . . 3527
remote-subaddress . . . . . 3582
repeat . . . . . 3185
repeat-time (web-redirect) . . . . . 257
restart bgp graceful (BGP only) . . . . . 1448
restart ipv6 ospf graceful . . . . . 1188
restart ospf graceful . . . . . 1092
restart rip graceful . . . . . 976
retry-interval (DDNS) . . . . . 839
revision (MSTP) . . . . . 586
rip restart grace-period . . . . . 977
rmdir . . . . . 175
rogue-ap-detection enable (wireless) . . . . . 2750
route (IPv6 RIPng) . . . . . 1014
route (RIP) . . . . . 1644
route (RIP) . . . . . 978
route . . . . . 2900
route-map . . . . . 1450
route-map . . . . . 1541
router bgp . . . . . 1449
router ipv6 ospf . . . . . 1189
router ipv6 rip . . . . . 1015
router ipv6 vrrp (interface) . . . . . 2356
router ospf . . . . . 1093
router ospf . . . . . 1647
router rip . . . . . 979
router vrrp (interface) . . . . . 2358
router-id (IPv6 OSPF) . . . . . 1190
router-id (VRF) . . . . . 1649
router-id . . . . . 1095
route-target . . . . . 1645
rsakeypair (ca-trustpoint) . . . . . 2314
rule (firewall) . . . . . 3254
rule (macfilter) . . . . . 546

rule (nat) . . . . . 3310
rule (softwire) . . . . . 3616
rule (traffic-control) . . . . . 2000
rule (web-control) . . . . . 3379
rule ip (macfilter) . . . . . 548
rule ipv6 (macfilter) . . . . . 550
sample-size (linkmon-probe) . . . . . 1732
sample-size . . . . . 3229
sc-channel . . . . . 2752
sc-profile . . . . . 2751
script . . . . . 3186
security (wireless) . . . . . 2753
security (wireless-network) . . . . . 2755
security (wireless-wds) . . . . . 2756
security-password forced-change . . . . . 216
security-password history . . . . . 215
security-password lifetime . . . . . 217
security-password minimum-categories . . . . . 219
security-password minimum-length . . . . . 220
security-password min-lifetime-enforce . . . . . 218
security-password reject-expired-pwd . . . . . 221
security-password warning . . . . . 222
send-lifetime . . . . . 980
server (pppoe-relay) . . . . . 734
server (radsecproxy-aaa) . . . . . 2223
server (server group) . . . . . 2248
server auth-port . . . . . 2286
server enable . . . . . 2287
server mutual-authentication . . . . . 2225
server name-check . . . . . 2226
server trustpoint . . . . . 2227
server-url (web-redirect) . . . . . 258
service advanced-vty . . . . . 223
service atmf-application-proxy . . . . . 2533
service dhcp-relay . . . . . 2901

service dhcp-relay . . . . . 2975
service dhcp-server . . . . . 2902
service http. . . . . 139
service password-encryption. . . . . 224
service pim . . . . . 1903
service pim6. . . . . 1962
service snmp-discovery . . . . . 2841
service ssh. . . . . 3141
service statistics interfaces counter. . . . . 458
service telnet . . . . . 225
service terminal-length (deleted). . . . . 226
service url-offload . . . . . 3445
service wireless . . . . . 2757
service-name . . . . . 735
session-keep . . . . . 2758
session-key-refresh-interval . . . . . 2759
set aggregator. . . . . 1544
set as-path . . . . . 1453
set as-path . . . . . 1545
set atomic-aggregate . . . . . 1546
set comm-list delete . . . . . 1547
set community . . . . . 1454
set community . . . . . 1548
set dampening . . . . . 1550
set extcommunity . . . . . 1552
set ip next-hop (route map) . . . . . 1554
set ipv6 next-hop . . . . . 1555
set local-preference. . . . . 1556
set metric . . . . . 1557
set metric-type . . . . . 1559
set origin . . . . . 1560
set originator-id . . . . . 1561
set tag. . . . . 1562
set weight . . . . . 1563
shared-secret. . . . . 3583

short-lease-threshold . . . . . 2903
show aaa local user locked . . . . . 2229
show aaa local user locked . . . . . 227
show aaa server group . . . . . 2230
show antivirus statistics . . . . . 3346
show antivirus . . . . . 3345
show application detail . . . . . 3292
show application . . . . . 3291
show application-proxy threat-protection . . . . . 2534
show application-proxy whitelist advertised-address . . . . . 2536
show application-proxy whitelist interface . . . . . 2537
show application-proxy whitelist server . . . . . 2539
show application-proxy whitelist supplicant . . . . . 2540
show arp . . . . . 1650
show arp . . . . . 789
show atmf area guests . . . . . 2549
show atmf area guests-detail . . . . . 2551
show atmf area nodes . . . . . 2553
show atmf area nodes-detail . . . . . 2555
show atmf area summary . . . . . 2557
show atmf area . . . . . 2546
show atmf authorization . . . . . 2558
show atmf backup area . . . . . 2565
show atmf backup guest . . . . . 2567
show atmf backup . . . . . 2561
show atmf container . . . . . 2569
show atmf detail . . . . . 2572
show atmf group members . . . . . 2576
show atmf group . . . . . 2574
show atmf guests detail . . . . . 2580
show atmf guests . . . . . 2578
show atmf links detail . . . . . 2585
show atmf links guest detail . . . . . 2596
show atmf links guest . . . . . 2594
show atmf links statistics . . . . . 2600

show atmf links . . . . . 2583
show atmf nodes . . . . . 2603
show atmf provision nodes . . . . . 2605
show atmf recovery-file . . . . . 2607
show atmf secure-mode audit link . . . . . 2611
show atmf secure-mode audit . . . . . 2610
show atmf secure-mode certificates . . . . . 2612
show atmf secure-mode sa . . . . . 2615
show atmf secure-mode statistics . . . . . 2618
show atmf secure-mode . . . . . 2608
show atmf tech . . . . . 2620
show atmf virtual-links . . . . . 2623
show atmf working-set . . . . . 2625
show atmf . . . . . 2542
show auth diagnostics . . . . . 2165
show auth interface . . . . . 2166
show auth sessionstatistics . . . . . 2168
show auth statistics interface . . . . . 2169
show auth supplicant interface . . . . . 2173
show auth supplicant . . . . . 2170
show auth two-step supplicant brief . . . . . 2174
show auth . . . . . 2164
show auth-web-server page . . . . . 2177
show auth-web-server . . . . . 2176
show autoboot . . . . . 176
show banner login . . . . . 3143
show bgp ipv6 (BGP4+ only) . . . . . 1456
show bgp ipv6 community (BGP4+ only) . . . . . 1457
show bgp ipv6 community-list (BGP4+ only) . . . . . 1459
show bgp ipv6 dampening (BGP4+ only) . . . . . 1460
show bgp ipv6 filter-list (BGP4+ only) . . . . . 1461
show bgp ipv6 inconsistent-as (BGP4+ only) . . . . . 1462
show bgp ipv6 longer-prefixes (BGP4+ only) . . . . . 1463
show bgp ipv6 neighbors (BGP4+ only) . . . . . 1464
show bgp ipv6 paths (BGP4+ only) . . . . . 1467

show bgp ipv6 prefix-list (BGP4+ only) .....1468
show bgp ipv6 quote-regexp (BGP4+ only) .....1469
show bgp ipv6 regexp (BGP4+ only).....1470
show bgp ipv6 route-map (BGP4+ only) .....1472
show bgp ipv6 summary (BGP4+ only) .....1473
show bgp memory maxallocation (BGP only) .....1474
show bgp nexthop-tracking (BGP only).....1475
show bgp nexthop-tree-details (BGP only).....1476
show boot.....177
show bridge macaddr .....554
show bridge.....552
show cellular .....476
show clock .....288
show connection-log events .....3256
show connection-log events .....432
show counter dhcp-client.....2905
show counter dhcp-relay .....2906
show counter dhcp-relay .....2976
show counter dhcp-server .....2910
show counter ipv6 dhcp-client.....2980
show counter ipv6 dhcp-server .....2982
show counter log.....433
show counter mail.....3123
show counter ping-poll .....3231
show counter snmp-server.....3017
show cpu history .....293
show cpu.....290
show crypto key hostkey.....3144
show crypto key mypubkey rsa.....2315
show crypto key pubkey-chain knownhosts .....1652
show crypto key pubkey-chain knownhosts .....3146
show crypto key pubkey-chain userkey.....3148
show crypto key userkey.....3149
show crypto pki certificates .....2316
show crypto pki enrollment user .....2318

show crypto pki trustpoint . . . . . 2319
show ddns-update-method status . . . . . 840
show debugging aaa . . . . . 2231
show debugging antivirus . . . . . 3347
show debugging atmf packet . . . . . 2627
show debugging atmf . . . . . 2626
show debugging bgp (BGP only) . . . . . 1477
show debugging dot1x . . . . . 2050
show debugging firewall. . . . . 3264
show debugging igmp. . . . . 1789
show debugging ip dns forwarding . . . . . 841
show debugging ip packet. . . . . 791
show debugging ipv6 ospf. . . . . 1191
show debugging ipv6 pim sparse-mode. . . . . 1963
show debugging ipv6 rip . . . . . 1016
show debugging isakmp. . . . . 3490
show debugging l2tp . . . . . 3584
show debugging lacp. . . . . 656
show debugging linkmon. . . . . 1733
show debugging lldp . . . . . 3091
show debugging mld . . . . . 1828
show debugging mstp. . . . . 587
show debugging nsm mcast . . . . . 1857
show debugging ospf . . . . . 1096
show debugging pim sparse-mode . . . . . 1904
show debugging platform packet . . . . . 508
show debugging ppp. . . . . 709
show debugging pppoe ac . . . . . 737
show debugging radius. . . . . 2250
show debugging rip . . . . . 982
show debugging snmp . . . . . 3021
show debugging traffic-control . . . . . 2002
show debugging trigger . . . . . 3188
show debugging vrrp. . . . . 2360
show debugging web-control. . . . . 3382

show debugging wireless....2760
show debugging....295
show dhcp lease....2912
show diagnostic channel-group....657
show dot1x diagnostics....2054
show dot1x interface....2056
show dot1x sessionstatistics....2058
show dot1x statistics interface....2059
show dot1x supplicant interface....2062
show dot1x supplicant....2060
show dot1x....2051
show dpi statistics....3401
show dpi....3399
show entity....3295
show etherchannel detail....659
show etherchannel summary....660
show etherchannel....658
show exception log....434
show file systems....180
show file....179
show firewall connections limits config-check....3260
show firewall connections limits....3259
show firewall connections....3258
show firewall rule config-check....3263
show firewall rule....3261
show firewall....3257
show flowcontrol interface....509
show history....132
show hosts....842
show http....140
show interface (PPP)....710
show interface brief....463
show interface err-disabled....510
show interface memory....296
show interface memory....464

show interface status . . . . . 466
show interface switchport . . . . . 511
show interface tunnel (GRE) . . . . . 3529
show interface tunnel (IPsec) . . . . . 3491
show interface tunnel (IPv6) . . . . . 3641
show interface tunnel (L2TPv3) . . . . . 3600
show interface tunnel (OpenVPN) . . . . . 3551
show interface . . . . . 459
show ip bgp (BGP only) . . . . . 1478
show ip bgp attribute-info (BGP only) . . . . . 1479
show ip bgp cidr-only (BGP only) . . . . . 1480
show ip bgp cidr-only (BGP only) . . . . . 1654
show ip bgp community (BGP only) . . . . . 1481
show ip bgp community (BGP only) . . . . . 1655
show ip bgp community-info (BGP only) . . . . . 1483
show ip bgp community-list (BGP only) . . . . . 1484
show ip bgp community-list (BGP only) . . . . . 1657
show ip bgp dampening (BGP only) . . . . . 1485
show ip bgp dampening (BGP only) . . . . . 1658
show ip bgp filter-list (BGP only) . . . . . 1487
show ip bgp filter-list (BGP only) . . . . . 1660
show ip bgp inconsistent-as (BGP only) . . . . . 1488
show ip bgp inconsistent-as (BGP only) . . . . . 1661
show ip bgp longer-prefixes (BGP only) . . . . . 1489
show ip bgp longer-prefixes (BGP only) . . . . . 1662
show ip bgp neighbors (BGP only) . . . . . 1490
show ip bgp neighbors connection-retrytime (BGP only) . . . . . 1493
show ip bgp neighbors hold-time (BGP only) . . . . . 1494
show ip bgp neighbors keepalive (BGP only) . . . . . 1495
show ip bgp neighbors keepalive-interval (BGP only) . . . . . 1496
show ip bgp neighbors notification (BGP only) . . . . . 1497
show ip bgp neighbors open (BGP only) . . . . . 1498
show ip bgp neighbors rcvd-msgs (BGP only) . . . . . 1499
show ip bgp neighbors sent-msgs (BGP only) . . . . . 1500
show ip bgp neighbors update (BGP only) . . . . . 1501

show ip bgp paths (BGP only) . . . . . 1502
show ip bgp prefix-list (BGP only) . . . . . 1503
show ip bgp prefix-list (BGP only) . . . . . 1663
show ip bgp quote-regexp (BGP only) . . . . . 1504
show ip bgp quote-regexp (BGP only) . . . . . 1664
show ip bgp regexp (BGP only) . . . . . 1506
show ip bgp regexp (BGP only) . . . . . 1666
show ip bgp route-map (BGP only) . . . . . 1508
show ip bgp route-map (BGP only) . . . . . 1668
show ip bgp scan (BGP only) . . . . . 1509
show ip bgp summary (BGP only) . . . . . 1510
show ip bgp summary (BGP only) . . . . . 1669
show ip community-list . . . . . 1512
show ip dhcp binding . . . . . 2913
show ip dhcp pool . . . . . 2915
show ip dhcp server statistics . . . . . 2922
show ip dhcp server summary . . . . . 2924
show ip dhcp-relay . . . . . 2920
show ip dhcp-relay . . . . . 2984
show ip dns forwarding cache . . . . . 844
show ip dns forwarding server . . . . . 846
show ip dns forwarding . . . . . 843
show ip domain-list . . . . . 848
show ip domain-name . . . . . 849
show ip extcommunity-list . . . . . 1513
show ip flooding-nexthops . . . . . 792
show ip forwarding . . . . . 793
show ip igmp groups . . . . . 1790
show ip igmp interface . . . . . 1792
show ip igmp proxy groups . . . . . 1795
show ip igmp proxy . . . . . 1794
show ip igmp snooping mrouter . . . . . 1797
show ip igmp snooping routermode . . . . . 1798
show ip igmp snooping source-timeout . . . . . 1799
show ip igmp snooping statistics . . . . . 1800

show ip interface vrf ..... 1671
show ip interface vrf ..... 795
show ip interface ..... 794
show ip mroute ..... 1858
show ip mvif ..... 1861
show ip name-server ..... 850
show ip ospf border-routers ..... 1100
show ip ospf database asbr-summary ..... 1103
show ip ospf database external ..... 1104
show ip ospf database network ..... 1106
show ip ospf database nssa-external ..... 1107
show ip ospf database opaque-area ..... 1109
show ip ospf database opaque-as ..... 1110
show ip ospf database opaque-link ..... 1111
show ip ospf database router ..... 1112
show ip ospf database summary ..... 1114
show ip ospf database ..... 1101
show ip ospf interface ..... 1117
show ip ospf neighbor ..... 1118
show ip ospf route ..... 1120
show ip ospf virtual-links ..... 1121
show ip ospf ..... 1097
show ip pbr route ..... 1575
show ip pim sparse-mode bsr-router ..... 1905
show ip pim sparse-mode interface detail ..... 1908
show ip pim sparse-mode interface ..... 1906
show ip pim sparse-mode local-members ..... 1909
show ip pim sparse-mode mroute detail ..... 1912
show ip pim sparse-mode mroute ..... 1910
show ip pim sparse-mode neighbor ..... 1914
show ip pim sparse-mode nexthop ..... 1915
show ip pim sparse-mode packet statistics ..... 1916
show ip pim sparse-mode rp mapping ..... 1918
show ip pim sparse-mode rp-hash ..... 1917
show ip prefix-list ..... 1514

show ip prefix-list . . . . . 983
show ip protocols bgp (BGP only) . . . . . 1516
show ip protocols ospf . . . . . 1122
show ip protocols rip . . . . . 984
show ip rip database . . . . . 986
show ip rip interface . . . . . 987
show ip rip vrf database . . . . . 1673
show ip rip vrf database . . . . . 988
show ip rip vrf interface . . . . . 1674
show ip rip vrf interface . . . . . 989
show ip rip . . . . . 985
show ip route database . . . . . 1678
show ip route database . . . . . 922
show ip route summary . . . . . 1681
show ip route summary . . . . . 925
show ip route . . . . . 1675
show ip route . . . . . 919
show ip rpf . . . . . 1862
show ip sockets . . . . . 797
show ip traffic . . . . . 800
show ip vrf detail . . . . . 1684
show ip vrf interface . . . . . 1685
show ip vrf . . . . . 1683
show ip-reputation categories . . . . . 3413
show ip-reputation . . . . . 3412
show ips categories . . . . . 3326
show ips . . . . . 3325
show ipsec counters . . . . . 3492
show ipsec peer . . . . . 3493
show ipsec policy . . . . . 3494
show ipsec profile . . . . . 3495
show ipsec sa . . . . . 3497
show ipv6 dhcp binding . . . . . 2987
show ipv6 dhcp interface . . . . . 2990
show ipv6 dhcp pool . . . . . 2992

show ipv6 dhcp ..... 2986
show ipv6 forwarding ..... 902
show ipv6 interface ..... 903
show ipv6 mif ..... 1866
show ipv6 mld groups ..... 1829
show ipv6 mld interface ..... 1830
show ipv6 mld snooping mrouter ..... 1831
show ipv6 mld snooping statistics ..... 1832
show ipv6 mroute ..... 1863
show ipv6 multicast forwarding ..... 1865
show ipv6 neighbors ..... 904
show ipv6 ospf database external ..... 1196
show ipv6 ospf database grace ..... 1197
show ipv6 ospf database inter-prefix ..... 1198
show ipv6 ospf database inter-router ..... 1199
show ipv6 ospf database intra-prefix ..... 1200
show ipv6 ospf database link ..... 1201
show ipv6 ospf database network ..... 1202
show ipv6 ospf database router ..... 1204
show ipv6 ospf database ..... 1194
show ipv6 ospf interface ..... 1209
show ipv6 ospf neighbor ..... 1211
show ipv6 ospf route ..... 1213
show ipv6 ospf virtual-links ..... 1215
show ipv6 ospf ..... 1192
show ipv6 pbr route ..... 1577
show ipv6 pim sparse-mode bsr-router ..... 1964
show ipv6 pim sparse-mode interface detail ..... 1967
show ipv6 pim sparse-mode interface ..... 1965
show ipv6 pim sparse-mode local-members ..... 1968
show ipv6 pim sparse-mode mroute detail ..... 1972
show ipv6 pim sparse-mode mroute ..... 1970
show ipv6 pim sparse-mode neighbor ..... 1974
show ipv6 pim sparse-mode nexthop ..... 1975
show ipv6 pim sparse-mode rp mapping ..... 1977

show ipv6 pim sparse-mode rp nexthop....1978
show ipv6 pim sparse-mode rp-hash....1976
show ipv6 prefix-list....1017
show ipv6 prefix-list....1515
show ipv6 protocols rip....1018
show ipv6 rip database....1020
show ipv6 rip interface....1021
show ipv6 rip....1019
show ipv6 route summary....907
show ipv6 route summary....929
show ipv6 route....905
show ipv6 route....927
show isakmp counters....3498
show isakmp key (IPsec)....3499
show isakmp peer....3500
show isakmp profile....3501
show isakmp sa....3503
show l2tp session....3585
show l2tp tunnel config-check....3591
show l2tp tunnel....3587
show lacp sys-id....661
show lacp-counter....662
show license external....243
show linkmon probe....1734
show linkmon probe-history....1737
show lldp interface....3094
show lldp local-info....3096
show lldp neighbors detail....3102
show lldp neighbors....3101
show lldp statistics interface....3108
show lldp statistics....3106
show lldp....3092
show location....3110
show log config....437
show log external....439

show log permanent....440
show log....435
show mac address-table....512
show mac-filter....555
show mail....3124
show malware-protection....3333
show memory allocations....300
show memory history....302
show memory pools....303
show memory shared....304
show memory....298
show mirror interface....487
show mirror....486
show nat rule config-check....3317
show nat rule....3315
show nat....3314
show ntp associations....3008
show ntp counters associations....3011
show ntp counters....3010
show ntp status....3012
show openvpn connections detail....3553
show openvpn connections....3552
show pbr rules brief....1584
show pbr rules brief....1744
show pbr rules....1579
show pbr rules....1739
show ping-poll....3233
show platform port....516
show platform....514
show port etherchannel....663
show pppoe-ac config-check....738
show pppoe-ac connections....740
show pppoe-ac statistics....742
show privilege....228
show process....305

show proxy-autoconfig-file ..... 2178
show radius local-server group ..... 2288
show radius local-server nas ..... 2289
show radius local-server statistics ..... 2290
show radius local-server user ..... 2291
show radius server group ..... 2232
show radius ..... 2251
show reboot history ..... 307
show resource ..... 245
show route-map ..... 1517
show route-map ..... 1564
show router-id ..... 308
show running-config antivirus ..... 3348
show running-config atmf ..... 2628
show running-config dpi ..... 3403
show running-config firewall ..... 3265
show running-config interface ..... 185
show running-config ip-reputation ..... 3415
show running-config ips ..... 3328
show running-config l2tp-profile ..... 3593
show running-config l2tp-tunnel ..... 3594
show running-config log ..... 441
show running-config malware-protection ..... 3334
show running-config nat ..... 3318
show running-config pppoe-ac ..... 745
show running-config pppoe-relay ..... 746
show running-config router ipv6 vrrp ..... 2361
show running-config router vrrp ..... 2362
show running-config snmp ..... 3022
show running-config snmp-discovery ..... 2842
show running-config softwire-configuration ..... 3618
show running-config ssh ..... 3150
show running-config traffic-control ..... 2003
show running-config trigger ..... 3189
show running-config url-filter ..... 3358

show running-config url-offload ....3446
show running-config vrf ....1686
show running-config web-control....3383
show running-config web-redirect ....259
show running-config ....182
show security-password configuration ....229
show security-password user....230
show snmp-discovery....2843
show snmp-server community ....3024
show snmp-server group ....3025
show snmp-server user ....3026
show snmp-server view....3027
show snmp-server ....3023
show softwire-configuration ....3619
show spanning-tree brief ....591
show spanning-tree mst config ....593
show spanning-tree mst detail interface....596
show spanning-tree mst detail ....594
show spanning-tree mst instance interface ....599
show spanning-tree mst instance ....598
show spanning-tree mst interface....600
show spanning-tree mst ....592
show spanning-tree statistics instance interface ....604
show spanning-tree statistics instance ....603
show spanning-tree statistics interface ....606
show spanning-tree statistics ....601
show spanning-tree vlan range-index ....608
show spanning-tree ....588
show ssh client ....3154
show ssh server allow-users....3157
show ssh server deny-users ....3158
show ssh server....3155
show ssh ....3152
show startup-config ....188
show static-channel-group....664

show storm-control....518
show system environment counters....311
show system environment....310
show system fiber-monitoring....336
show system interrupts....313
show system mac....314
show system pci device....315
show system pci tree....316
show system pluggable detail....341
show system pluggable diagnostics....344
show system pluggable....339
show system serialnumber....317
show system usb....479
show system....309
show tacacs+....2329
show tech-support....318
show telnet....231
show traffic-control counters....2005
show traffic-control interface....2007
show traffic-control policy....2009
show traffic-control red-curve....2011
show traffic-control rule config-check....2013
show traffic-control rule....2014
show traffic-control....2015
show trigger....3190
show url-filter....3359
show url-offload endpoint-source manual entries....3448
show url-offload endpoint-source office365 entries....3450
show url-offload endpoint-source office365 raw-data....3453
show url-offload endpoint-source....3447
show url-offload pac-file template....3460
show url-offload pac-file....3456
show users....232
show version....189
show vlan....558

show vrrp (session) . . . . . 2369
show vrrp counters . . . . . 2365
show vrrp ipv6. . . . . 2368
show vrrp . . . . . 2363
show web-control bypass . . . . . 3386
show web-control categories . . . . . 3387
show web-control rules . . . . . 3389
show web-control . . . . . 3384
show web-redirect. . . . . 260
show wireless ap capability . . . . . 2767
show wireless ap client . . . . . 2769
show wireless ap neighbors . . . . . 2770
show wireless ap power-channel . . . . . 2771
show wireless ap . . . . . 2762
show wireless ap-profile . . . . . 2772
show wireless auto-config . . . . . 2775
show wireless captive-portal network walled-garden . . . . . 2778
show wireless channel-blanket ap status . . . . . 2779
show wireless channel-blanket ap-profile status . . . . . 2780
show wireless country-code. . . . . 2781
show wireless network. . . . . 2782
show wireless power-channel calculate . . . . . 2784
show wireless sc-profile. . . . . 2785
show wireless security . . . . . 2787
show wireless smart-connect ap . . . . . 2789
show wireless task . . . . . 2790
show wireless wds . . . . . 2793
show wireless wireless-mac-filter. . . . . 2795
show wireless . . . . . 2761
shutdown . . . . . 468
size (linkmon-probe). . . . . 1746
smart-connect-profile. . . . . 2797
snmp (wireless-ap-prof). . . . . 2798
snmp trap link-status suppress . . . . . 3030
snmp trap link-status . . . . . 3028

snmp-discovery arp-polling-interval....2846
snmp-discovery community....2847
snmp-discovery deny....2848
snmp-discovery permit....2850
snmp-discovery snmp-polling-interval....2851
snmp-discovery snmp-version....2852
snmp-discovery user....2853
snmp-server community....3034
snmp-server contact....3035
snmp-server enable trap....3036
snmp-server engineID local reset....3041
snmp-server engineID local....3039
snmp-server group....3042
snmp-server host....3044
snmp-server legacy-ifadminstatus....3046
snmp-server location....3047
snmp-server source-interface....3048
snmp-server startup-trap-delay....3049
snmp-server user....3050
snmp-server view....3053
snmp-server....3032
sntp-address....2994
softwire-configuration....3621
source (linkmon-probe)....1747
source....3595
source-ip....3237
spanning-tree autoedge (RSTP and MSTP)....609
spanning-tree cisco-interoperability (MSTP)....610
spanning-tree edgeport (RSTP and MSTP)....611
spanning-tree enable....612
spanning-tree errdisable-timeout enable....614
spanning-tree errdisable-timeout interval....615
spanning-tree force-version....616
spanning-tree forward-time....617
spanning-tree guard root....618

spanning-tree hello-time ..... 619
spanning-tree link-type ..... 620
spanning-tree max-age ..... 621
spanning-tree max-hops (MSTP) ..... 622
spanning-tree mode ..... 623
spanning-tree mst configuration ..... 624
spanning-tree mst instance path-cost ..... 626
spanning-tree mst instance priority ..... 628
spanning-tree mst instance restricted-role ..... 629
spanning-tree mst instance restricted-tcn ..... 631
spanning-tree mst instance ..... 625
spanning-tree path-cost ..... 632
spanning-tree portfast (STP) ..... 633
spanning-tree portfast bpdu-filter ..... 635
spanning-tree portfast bpdu-guard ..... 637
spanning-tree priority (bridge priority) ..... 639
spanning-tree priority (port priority) ..... 640
spanning-tree restricted-role ..... 641
spanning-tree restricted-tcn ..... 642
spanning-tree transmit-holdcount ..... 643
speed (asyn) ..... 320
speed ..... 519
sport ..... 3298
ssh client ..... 3161
ssh server allow-users ..... 3165
ssh server authentication ..... 3167
ssh server deny-users ..... 3169
ssh server max-auth-tries ..... 3171
ssh server resolve-host ..... 3172
ssh server scp ..... 3173
ssh server secure-ciphers ..... 3174
ssh server sftp ..... 3175
ssh server ..... 3163
ssh ..... 1687
ssh ..... 3159

ssid (wireless-network) . . . . . 2799
ssid (wireless-sc-prof) . . . . . 2800
state . . . . . 2629
static-channel-group . . . . . 665
station-isolation enable (wireless-ap-prof-radio) . . . . . 2802
station-isolation enable . . . . . 2801
storm-control level . . . . . 521
sub-class (htb) . . . . . 2016
sub-class (priority) . . . . . 2018
sub-class (wrr) . . . . . 2020
subject-name (ca-trustpoint) . . . . . 2320
subnet-mask . . . . . 2925
sub-sub-class (htb) . . . . . 2022
sub-sub-class (priority) . . . . . 2024
sub-sub-class (wrr) . . . . . 2026
summary-address (IPv6 OSPF) . . . . . 1216
summary-address . . . . . 1123
suppress-ipv4-updates (DDNS) . . . . . 852
switchport access vlan . . . . . 559
switchport atmf-agentlink . . . . . 2631
switchport atmf-arealink . . . . . 2632
switchport atmf-crosslink . . . . . 2634
switchport atmf-guestlink . . . . . 2636
switchport atmf-link . . . . . 2638
switchport mode access . . . . . 560
switchport mode trunk . . . . . 561
switchport trunk allowed vlan . . . . . 562
switchport trunk native vlan . . . . . 565
switchport voice dscp . . . . . 566
switchport voice vlan priority . . . . . 569
switchport voice vlan . . . . . 567
synchronization . . . . . 1518
tacacs-server host . . . . . 2331
tacacs-server key . . . . . 2333
tacacs-server timeout . . . . . 2334

task . . . . . 2803
tcpdump . . . . . 1689
tcpdump . . . . . 802
telnet server . . . . . 234
telnet . . . . . 1690
telnet . . . . . 233
terminal length . . . . . 235
terminal monitor . . . . . 322
terminal resize . . . . . 236
test . . . . . 3195
time (trigger) . . . . . 3196
time (wireless-task) . . . . . 2804
timeout (ping polling) . . . . . 3239
timeout (pppoe-relay) . . . . . 747
timers (BGP) . . . . . 1520
timers (IPv6 RIPng) . . . . . 1022
timers (RIP) . . . . . 1691
timers (RIP) . . . . . 990
timers spf exp (IPv6 OSPF) . . . . . 1218
timers spf exp . . . . . 1124
traceroute ipv6 . . . . . 908
traceroute . . . . . 1693
traceroute . . . . . 803
traffic-control enable . . . . . 2028
traffic-control . . . . . 2029
transform (IPsec Profile) . . . . . 3504
transform (ISAKMP Profile) . . . . . 3505
transition-mode . . . . . 2371
trap host (wireless-ap-prof-snmp) . . . . . 2805
trap . . . . . 3198
trigger activate . . . . . 3200
trigger . . . . . 3199
tunnel checksum . . . . . 3530
tunnel destination (DS-Lite) . . . . . 3623
tunnel destination (GRE) . . . . . 3532

tunnel destination (IPsec) . . . . . 3507
tunnel destination (IPv6) . . . . . 3642
tunnel destination (L2TPv3) . . . . . 3601
tunnel df . . . . . 3603
tunnel dscp . . . . . 3531
tunnel dscp . . . . . 3644
tunnel endpoint . . . . . 3534
tunnel local id . . . . . 3604
tunnel local name (GRE) . . . . . 3536
tunnel local name (IPsec) . . . . . 3509
tunnel local selector . . . . . 3510
tunnel mode (IPv6) . . . . . 3645
tunnel mode ds-lite . . . . . 3624
tunnel mode gre multipoint . . . . . 3538
tunnel mode gre . . . . . 3537
tunnel mode ipsec . . . . . 3512
tunnel mode l2tp v3 . . . . . 3605
tunnel mode lw4o6 . . . . . 3625
tunnel mode map-e . . . . . 3626
tunnel mode openvpn tap . . . . . 3557
tunnel mode openvpn tun . . . . . 3558
tunnel openvpn authentication . . . . . 3554
tunnel openvpn cipher . . . . . 3555
tunnel openvpn expiry-bytes . . . . . 3559
tunnel openvpn expiry-seconds . . . . . 3560
tunnel openvpn port . . . . . 3561
tunnel openvpn tagging . . . . . 3562
tunnel protection ipsec (GRE) . . . . . 3539
tunnel protection ipsec (IPsec) . . . . . 3513
tunnel protection ipsec . . . . . 3606
tunnel remote id . . . . . 3607
tunnel remote name (GRE) . . . . . 3540
tunnel remote name (IPsec) . . . . . 3514
tunnel remote selector . . . . . 3515
tunnel security-reprocessing . . . . . 3517

tunnel security-reprocessing . . . . . 3541
tunnel security-reprocessing . . . . . 3563
tunnel security-reprocessing . . . . . 3608
tunnel security-reprocessing . . . . . 3622
tunnel selector paired . . . . . 3518
tunnel softwire . . . . . 3627
tunnel source (GRE) . . . . . 3542
tunnel source (IPsec) . . . . . 3519
tunnel source (IPv6) . . . . . 3646
tunnel source (L2TPv3) . . . . . 3609
tunnel ttl . . . . . 3544
tunnel ttl . . . . . 3648
type (wireless-sec-wep) . . . . . 2806
type ap-configuration apply ap . . . . . 2807
type atmf node . . . . . 2639
type atmf node . . . . . 3201
type card . . . . . 3204
type cpu . . . . . 3205
type download ap (wireless-task) . . . . . 2808
type interface . . . . . 3206
type linkmon-probe . . . . . 3207
type log . . . . . 3209
type memory . . . . . 3210
type periodic . . . . . 3211
type ping-poll . . . . . 3212
type power-channel ap all . . . . . 2809
type reboot . . . . . 3213
type time . . . . . 3214
type usb . . . . . 3215
undebug (DDNS) . . . . . 853
undebug aaa . . . . . 2234
undebug all ipv6 pim sparse-mode . . . . . 1980
undebug all pim sparse-mode . . . . . 1919
undebug all . . . . . 323
undebug atmf . . . . . 2642

undebug bgp (BGP only) . . . . . 1522
undebug dot1x . . . . . 2064
undebug igmp . . . . . 1802
undebug ip packet interface . . . . . 804
undebug ipv6 ospf events . . . . . 1219
undebug ipv6 ospf ifsm . . . . . 1220
undebug ipv6 ospf lsa . . . . . 1221
undebug ipv6 ospf nfsm . . . . . 1222
undebug ipv6 ospf packet . . . . . 1223
undebug ipv6 ospf route . . . . . 1224
undebug ipv6 pim sparse-mode . . . . . 1981
undebug ipv6 rip . . . . . 1023
undebug isakmp . . . . . 3521
undebug lacp . . . . . 667
undebug mail . . . . . 3125
undebug mstp . . . . . 644
undebug ospf events . . . . . 1125
undebug ospf ifsm . . . . . 1126
undebug ospf lsa . . . . . 1127
undebug ospf nfsm . . . . . 1128
undebug ospf nsm . . . . . 1129
undebug ospf packet . . . . . 1130
undebug ospf route . . . . . 1131
undebug ping-poll . . . . . 3241
undebug platform packet . . . . . 522
undebug ppp . . . . . 714
undebug radius . . . . . 2254
undebug rip . . . . . 992
undebug snmp . . . . . 3054
undebug ssh client . . . . . 3176
undebug ssh server . . . . . 3177
undebug trigger . . . . . 3216
undebug vrrp events . . . . . 2374
undebug vrrp packet . . . . . 2375
undebug vrrp . . . . . 2373

unmount . . . . . 190
unmount . . . . . 442
up-count . . . . . 3240
update now . . . . . 247
update webgui now . . . . . 141
update webgui now . . . . . 249
update-interval (antivirus) . . . . . 3349
update-interval (DDNS) . . . . . 854
update-interval (dpi) . . . . . 3404
update-interval (endpoint-office365) . . . . . 3462
update-interval (IP Reputation) . . . . . 3416
update-interval (malware) . . . . . 3335
update-interval (url-filter) . . . . . 3360
update-url (DDNS) . . . . . 855
upstream-interface . . . . . 3628
url (endpoint office365) . . . . . 3463
url (linkmon-probe) . . . . . 1748
url-filter reload custom-lists . . . . . 3362
url-filter . . . . . 3363
url-offload update-now . . . . . 3465
url-offload . . . . . 3464
usb mode-switch . . . . . 481
use-ipv4-for-ipv6-updates (DDNS) . . . . . 858
user (RADIUS server) . . . . . 2293
username (DDNS) . . . . . 859
username (wireless-ap-prof-snmp) . . . . . 2810
username . . . . . 237
username . . . . . 2643
vap network (wireless-ap-prof-radio) . . . . . 2814
vap . . . . . 2812
version (ISAKMP) . . . . . 3522
version (RIP) . . . . . 1694
version (RIP) . . . . . 993
version (wireless-ap-prof-snmp) . . . . . 2815
version . . . . . 3596

versions (wireless-sec-wpa-ent) . . . . . 2816
versions (wireless-sec-wpa-psnl) . . . . . 2817
virtual-ip . . . . . 2376
virtual-ipv6 . . . . . 2378
vlan (RADIUS server) . . . . . 2295
vlan (wireless-network) . . . . . 2818
vlan database . . . . . 572
vlan . . . . . 570
vrrp vmac . . . . . 2380
wait . . . . . 446
walled-garden entry . . . . . 2819
wan-bypass (interface mode) . . . . . 2339
wds radio (wireless-ap) . . . . . 2822
wds . . . . . 2821
web-auth radius auth group . . . . . 2823
web-control categorize . . . . . 3392
web-control . . . . . 3390
web-redirect . . . . . 261
whitelist (IP Reputation) . . . . . 3418
whitelist (url-filter) . . . . . 3364
wireless ap-configuration apply ap . . . . . 2825
wireless auto-config . . . . . 2826
wireless download ap url . . . . . 2828
wireless emergency-mode . . . . . 2830
wireless export . . . . . 2831
wireless import . . . . . 2832
wireless power-channel ap all . . . . . 2833
wireless reset ap . . . . . 2834
wireless . . . . . 2824
wireless-mac-filter (wireless) . . . . . 2835
wireless-mac-filter (wireless-ap-prof) . . . . . 2836
wireless-mac-filter enable . . . . . 2838
write file . . . . . 191
write memory . . . . . 192
write terminal . . . . . 193

zone . . . . . .3300

# Part 1: Setup and Troubleshooting

# 1 CLI Navigation Commands

## Introduction

**Overview** This chapter provides an alphabetical reference for the commands used to navigate between different modes. This chapter also provides a reference for the help and show commands used to help navigate within the CLI.

**Command List**


- "configure terminal" on page 123
- "disable (Privileged Exec mode)" on page 124
- "do" on page 125
- "enable (Privileged Exec mode)" on page 126
- "end" on page 128
- "exit" on page 129
- "help" on page 130
- "logout" on page 131
- "show history" on page 132

# configure terminal

**Overview** This command enters the Global Configuration command mode.

**Syntax** `configure terminal`

**Mode** Privileged Exec

**Example** To enter the Global Configuration command mode (note the change in the command prompt), enter the command:

```
awplus# configure terminal
awplus(config)#
```

# disable (Privileged Exec mode)

**Overview** This command exits the Privileged Exec mode, returning the prompt to the User Exec mode. To end a session, use the exit command.

**Syntax**

```
disable
```

**Mode** Privileged Exec

**Example** To exit the Privileged Exec mode, enter the command:

```
awplus# disable
awplus>
```

**Related commands**

enable (Privileged Exec mode)

end

exit

# do

**Overview** This command lets you to run User Exec and Privileged Exec mode commands when you are in any configuration mode.

**Syntax** `do <command>`

| Parameter | Description |
|---|---|
| *<command>* | Specify the command and its parameters. |

**Mode** Any configuration mode

**Example**

```
awplus# configure terminal
awplus(config)# do ping 192.0.2.23
```

# enable (Privileged Exec mode)

**Overview** This command enters the Privileged Exec mode and optionally changes the privilege level for a session. If a privilege level is not specified then the maximum privilege level (15) is applied to the session. If the optional privilege level is omitted then only users with the maximum privilege level can access Privileged Exec mode without providing the password as specified by the enable password or enable secret (deprecated) commands. If no password is specified then only users with the maximum privilege level set with the username command can assess Privileged Exec mode.

**Syntax**

```
enable [<privilege-level>]
```

| Parameter | Description |
|---|---|
| `<privilege-level>` | Specify the privilege level for a CLI session in the range `<1-15>`, where 15 is the maximum privilege level, 7 is the intermediate privilege level and 1 is the minimum privilege level. The privilege level for a user must match or exceed the privilege level set for the CLI session for the user to access Privileged Exec mode. Privilege level for a user is configured by username. |

**Mode** User Exec

**Usage notes** Many commands are available from the Privileged Exec mode that configure operating parameters for the device, so you should apply password protection to the Privileged Exec mode to prevent unauthorized use. Passwords can be encrypted but then cannot be recovered. Note that non-encrypted passwords are shown in plain text in configurations.

The username command sets the privilege level for the user. After login, users are given access to privilege level 1. Users access higher privilege levels with the enable (Privileged Exec mode) command. If the privilege level specified is higher than the users configured privilege level specified by the username command, then the user is prompted for the password for that level.

Note that a separate password can be configured for each privilege level using the enable password and the enable secret (deprecated) commands from the Global Configuration mode. The service password-encryption command encrypts passwords configured by the enable password and the enable secret (deprecated) commands, so passwords are not shown in plain text in configurations.

**Example** The following example shows the use of the **enable** command to enter the Privileged Exec mode (note the change in the command prompt).

```
awplus> enable
awplus#
```

The following example shows the **enable** command enabling access the Privileged Exec mode for users with a privilege level of 7 or greater. Users with a privilege level of 7 or greater do not need to enter a password to access Privileged

Exec mode. Users with a privilege level 6 or less need to enter a password to access Privilege Exec mode. Use the enable password command or the enable secret (deprecated) commands to set the password to enable access to Privileged Exec mode.

```
awplus> enable 7
awplus#
```

**Related commands**

disable (Privileged Exec mode)

enable password

enable secret (deprecated)

exit

service password-encryption

username

# end

**Overview** This command returns the prompt to the Privileged Exec command mode, from any advanced command mode.

**Syntax** end

**Mode** All advanced command modes, including Global Configuration and Interface Configuration modes.

**Example** The following example shows how to use the **end** command to return to the Privileged Exec mode directly from Interface Configuration mode.

```
awplus# configure terminal
awplus(config)# interface eth1
awplus(config-if)# end
awplus#
```

**Related commands**

disable (Privileged Exec mode)

enable (Privileged Exec mode)

exit

# exit

**Overview** This command exits the current mode, and returns the prompt to the mode at the previous level. When used in User Exec mode, the **exit** command terminates the session.

**Syntax**

```
exit
```

**Mode** All command modes, including Interface Configuration and Global Configuration modes.

**Example** The following example shows the use of the **exit** command to exit Interface Configuration mode and return to Global Configuration mode.

```
awplus# configure terminal
awplus(config)# interface eth1
awplus(config-if)# exit
awplus(config)#
```

**Related commands**

disable (Privileged Exec mode)

enable (Privileged Exec mode)

end

# help

**Overview** This command displays a description of the AlliedWare Plus™ OS help system.

**Syntax** `help`

**Mode** All command modes

**Example** To display a description on how to use the system help, use the command:

```
awplus# help
```

**Output** Figure 1-1: Example output from the **help** command

```
When you need help at the command line, press '?'.

If nothing matches, the help list will be empty. Delete
characters until entering a '?' shows the available options.

Enter '?' after a complete parameter to show remaining valid
command parameters (e.g. 'show ?').

Enter '?' after part of a parameter to show parameters that
complete the typed letters (e.g. 'show ip?').
```

# logout

**Overview** This command exits the User Exec or Privileged Exec modes and ends the session.

**Syntax** `logout`

**Mode** User Exec and Privileged Exec

**Example** To exit the User Exec mode, use the command:

```
awplus# logout
```

# show history

**Overview** This command lists the commands entered in the current session. The history buffer is cleared automatically upon reboot.

The output lists all command line entries, including commands that returned an error.

For information on filtering and saving command output, see the "Getting Started with AlliedWare Plus" Feature Overview and Configuration Guide.

**Syntax** `show history`

**Mode** User Exec and Privileged Exec

**Example** To display the commands entered during the current session, use the command:

```
awplus# show history
```

**Output** Figure 1-2: Example output from the **show history** command

```
    1 en
    2 show ru
    3 conf t
    4 route-map er deny 3
    5 exit
    6 ex
    7 di
```

# 2 Device GUI and Vista Manager EX Commands

## Introduction

**Overview**

This chapter provides an alphabetical reference of commands used to configure the Device GUI. They also allow your device to be monitored and managed by Vista Manager EX™.

For more information, see Getting Started with the Device GUI on UTM Firewalls.

**Command List**


- "atmf topology-gui enable" on page 134
- "http log webapi-requests" on page 135
- "http port" on page 136
- "http secure-port" on page 137
- "log event-host" on page 138
- "service http" on page 139
- "show http" on page 140
- "update webgui now" on page 141

# atmf topology-gui enable

**Overview**

Use this command to enable the operation of Vista Manager EX on the Master device.

Vista Manager EX delivers state-of-the-art monitoring and management for your Autonomous Management Framework™ (AMF) network, by automatically creating a complete topology map of switches, firewalls and wireless access points (APs). An expanded view includes third-party devices such as security cameras.

Use the **no** variant of this command to disable operation of Vista Manager EX.

**Syntax**

```
atmf topology-gui enable
no atmf topology-gui enable
```

**Default**

Disabled by default on AMF Master and member nodes. Enabled by default on Controllers.

**Mode**

Global Configuration mode

**Usage notes**

To use Vista Manager EX, you must also enable the HTTP service on all AMF nodes, including all AMF masters and controllers. The HTTP service is enabled by default on AlliedWare Plus switches and disabled by default on AR-Series firewalls. To enable it, use the commands:

```
Node1# configure terminal
Node1(config)# service http
```

On one master in each AMF area in your network, you also need to configure the master to send event notifications to Vista Manager EX. To do this, use the commands:

```
Node1# configure terminal
Node1(config)# log event-host <ip-address> atmf-topology-event
```

**Examples**

To enable Vista Manager EX on Node1, use the commands:

```
Node1# configure terminal
Node1(config)# atmf topology-gui enable
```

To disable Vista Manager EX on Node1, use the commands:

```
Node1# configure terminal
Node1(config)# no atmf topology-gui enable
```

**Related commands**

atmf enable

log event-host

service http

# http log webapi-requests

**Overview**

Use this command to log authenticated web API requests. These logs allow you to monitor and debug Vista Manager EX or Device GUI interactions with your device.

See the Logging Feature Overview and Configuration Guide for more information about the different types of logging and how to filter log messages.

Use the **no** variant of this command to disable authenticated web API request logging.

**Syntax**

```
http log webapi-requests {configuration|all}
no http log webapi-requests
```

| Parameter | Description |
|---|---|
| `configuration` | Log PUT, POST, and DELETE requests. |
| `all` | Log PUT, POST, DELETE, and GET requests. |

**Default**

Web API request logging is disabled.

**Mode**

Global Configuration

**Example**

To enable logging of all authenticated web API requests, use the following commands:

```
awplus# configure terminal
awplus(config)# http log webapi-requests all
```

To disable logging of authenticated web API requests, use the following commands:

```
awplus# configure terminal
awplus(config)# no http log webapi-requests
```

**Related commands**

http port

service http

show log

**Command changes**

Version 5.4.8-1.1: command added

# http port

**Overview**

Use this command to change the HTTP port used to access the web-based device GUI, or to disable HTTP management.

Use the **no** variant of this command to return to using the default port, which is 80.

**Syntax**

```
http port {<1-65535>|none}
no http port
```

| Parameter | Description |
|---|---|
| *<1-65535>* | The HTTP port number |
| none | Disable HTTP management. You may want to do this if you need to use port 80 for a different service or you do not need to use HTTP at all. |

**Default**

The default port for accessing the GUI is port 80.

**Mode**

Global Configuration

**Usage notes**

Do not configure the HTTP port to be the same as the HTTPS port.

Note that the device will redirect from HTTP to HTTPS unless you have disabled HTTPS access, which we do not recommend doing.

**Example**

To set the port to 8080, use the commands:

```
awplus# configure terminal
awplus(config)# http port 8080
```

To return to using the default port of 80, use the commands:

```
awplus# configure terminal
awplus(config)# no http port
```

To stop users from accessing the GUI via HTTP, use the commands:

```
awplus# configure terminal
awplus(config)# http port none
```

**Related commands**

http secure-port

service http

show http

**Command changes**

Version 5.4.7-2.4: command added on AR-Series devices

Version 5.4.8-0.2: command added on AlliedWare Plus switches

# http secure-port

**Overview**

Use this command to change the HTTPS port used to access the web-based device GUI, or to disable HTTPS management.

Use the **no** variant of this command to return to using the default port, which is 443.

**Syntax**

```
http secure-port {<1-65535>|none}
no http secure-port
```

| Parameter | Description |
|---|---|
| *<1-65535>* | The HTTPS port number |
| none | Disable HTTPS management. Do not do this if you want to use Vista Manager EX or the GUI. |

**Default**

The default port for accessing the GUI is port 443.

**Mode**

Global Configuration

**Usage notes**

Do not configure the HTTPS port to be the same as the HTTP port.

Note that if you are using Vista Manager EX and need to change the HTTPS port, you must use certificate-based authorization in Vista Manager EX. See the Vista Manager EX Installation Guide for instructions.

**Example**

To set the port to 8443, use the commands:

```
awplus# configure terminal
awplus(config)# http secure-port 8443
```

To return to using the default port of 443, use the commands:

```
awplus# configure terminal
awplus(config)# no http secure-port
```

To stop users from accessing the GUI via HTTPS, use the commands:

```
awplus# configure terminal
awplus(config)# http secure-port none
```

**Related commands**

http port

service http

show http

**Command changes**

Version 5.4.7-1.1: command added on AR-Series devices

Version 5.4.7-2.4: **none** parameter added

Version 5.4.8-0.2: command added on AlliedWare Plus switches

# log event-host

**Overview**

Use this command to set up an external host to log AMF topology events through Vista Manager. This command is run on the Master device.

Use the **no** variant of this command to disable log events through Vista Manager.

**Syntax**

```
log event-host [<ipv4-addr>|<ipv6-addr>] atmf-topology-event
no log event-host [<ipv4-addr>|<ipv6-addr>] atmf-topology-event
```

| Parameter | Description |
|---|---|
| *<ipv4-addr>* | ipv4 address of the event host |
| *<ipv6-addr>* | ipv6 address of the event host |

**Default**

Log events are disabled by default.

**Mode**

Global Configuration

**Usage notes**

Event hosts are set so syslog sends the messages out as they come.

Note that there is a difference between log event and log host messages:

- Log event messages are sent out as they come by syslog
- Log host messages are set to wait for a number of messages (20) to send them out together for traffic optimization.

**Example**

To enable Node 1 to log event messages from host IP address 192.0.2.31, use the following commands:

```
Node1# configure terminal
Node1(config)# log event-host 192.0.2.31 atmf-topology-event
```

To disable Node 1 to log event messages from host IP address 192.0.2.31, use the following commands:

```
Node1# configure terminal
Node1(config)# no log event-host 192.0.2.31 atmf-topology-event
```

**Related commands**

atmf topology-gui enable

# service http

**Overview**

Use this command to enable the HTTP (Hypertext Transfer Protocol) service.

This service is required to support Vista Manager EX™ and the Device GUI.

Use the **no** variant of this command to disable the HTTP feature.

**Syntax**

```
service http
no service http
```

**Default**

Enabled if your device came from the factory with the Device GUI pre-installed. Otherwise disabled.

**Mode**

Global Configuration

**Example**

To enable the HTTP service, use the following commands:

```
awplus# configure terminal
awplus(config)# service http
```

To disable the HTTP service, use the following commands:

```
awplus# configure terminal
awplus(config)# no service http
```

**Related commands**

http port

http secure-port

show http

# show http

**Overview** This command shows the HTTP server settings.

**Syntax** `show http`

**Mode** User Exec and Privileged Exec

**Example** To show the HTTP server settings, use the command:

```
awplus# show http
```

**Output** Figure 2-1: Example output from the **show http** command

```
awplus#show http
HTTP Server Configuration
------------------------------------------------------------
HTTP server                     : Enabled
Port                            : 80
Web GUI Information
------------------------------------------------------------
GUI file in use                 : webgui
GUI version:                    : 3.1
```

**Related commands** clear line vty

service http

# update webgui now

**Overview** Use this command to check whether you have the latest version of the device's GUI and update it if a newer version is available.

**Syntax**

```
update webgui now
```

**Mode** Privileged Exec

**Usage notes** If you have previously used the **copy** command to copy GUI files onto your device, these files need to be deleted before running **update webgui now**. To delete all GUI files, use the command:

```
awplus# del *gui_*.tar.gz
```

**Examples** To check for GUI updates, use the following command:

```
awplus# update webgui now
```

**Related commands** show resource

**Command changes** Version 5.4.9-2.1: command added to SBx908 GEN2

# 3 File and Configuration Management Commands

## Introduction

**Overview**

This chapter provides an alphabetical reference of AlliedWare Plus™ OS file and configuration management commands.

**Filename Syntax and Keyword Usage**

Many of the commands in this chapter use the placeholder 'filename' to represent the name and location of the file that you want to act on. The following table explains the syntax of the filename for each different type of file location.

| When you copy a file... | Use this syntax: | Example: |
|---|---|---|
| Copying in local flash memory | `flash:[/][<directory>/]<filename>` | To specify a file in the configs directory in flash: flash:configs/example.cfg |
| Copying to or from an SD (or SDHC) card | `card:[/][<directory>/]<filename>` | To specify a file in the top-level directory of the SD card: card:example.cfg |
| Copying to or from a USB storage device | `usb:[/][<directory>/]<filename>` | To specify a file in the top-level directory of the USB stick: usb:example.cfg |
| Copying with HTTP | `http://[[<username>:<password>]@]{<hostname>\|<host-ip>}[/<filepath>]/<filename>` | To specify a file in the configs directory on the server: http://www.company.com/configs/example.cfg |
| Copying with TFTP | `tftp://[[<location>]/<directory>]/<filename>` | To specify a file in the top-level directory of the server: tftp://172.1.1.1/example.cfg |

| When you copy a file... | Use this syntax: | Example: |
|---|---|---|
| Copying with SCP | `scp://<username>@<location>[/<directory>][/<filename>]` | To specify a file in the configs directory on the server, logging on as user 'bob': e.g. scp://bob@10.10.0.12/configs/example.cfg |
| Copying with SFTP | `sftp://[[<location>]/<directory>]/<filename>` | To specify a file in the top-level directory of the server: sftp://10.0.0.5/example.cfg |

**Valid characters**

The filename and path can include characters from up to four categories. The categories are:

1) uppercase letters: A to Z
2) lowercase letters: a to z
3) digits: 0 to 9
4) special symbols: most printable ASCII characters not included in the previous three categories, including the following characters:
   - -
   - /
   - .
   - _
   - @
   - "
   - '
   - *
   - :
   - ~
   - ?

Do not use spaces, parentheses or the + symbol within filenames. Use hyphens or underscores instead.

**Syntax for directory listings**

A leading slash (/) indicates the root of the current file system location.

In commands where you need to specify the local file system's flash base directory, you may use **flash** or **flash:** or **flash:/**. For example, these commands are all the same:

- `dir flash`
- `dir flash:`
- `dir flash:/`

Similarly, you can specify the SD (or SDHC) card base directory with **card** or **card:** or **card:/**

Similarly, you can specify the USB storage device base directory with **usb** or **usb:** or **usb:/**

You cannot name a directory or subdirectory **flash**, **nvs**, **usb**, **card**, **tftp**, **scp**, **sftp** or **http.** These keywords are reserved for tab completion when using various file commands.

## Command List


- "autoboot enable" on page 146
- "boot config-file" on page 147
- "boot config-file backup" on page 149
- "boot system" on page 150
- "boot system backup" on page 152
- "cd" on page 153
- "copy (filename)" on page 154
- "copy debug" on page 156
- "copy running-config" on page 157
- "copy startup-config" on page 158
- "copy zmodem" on page 159
- "create autoboot" on page 160
- "delete" on page 161
- "delete debug" on page 162
- "dir" on page 163
- "edit" on page 165
- "edit (filename)" on page 166
- "erase factory-default" on page 167
- "erase startup-config" on page 168
- "ip tftp source-interface" on page 169
- "ipv6 tftp source-interface" on page 170
- "mkdir" on page 171
- "move" on page 172
- "move debug" on page 173
- "pwd" on page 174
- "rmdir" on page 175
- "show autoboot" on page 176
- "show boot" on page 177
- "show file" on page 179

- "show file systems" on page 180
- "show running-config" on page 182
- "show running-config interface" on page 185
- "show startup-config" on page 188
- "show version" on page 189
- "unmount" on page 190
- "write file" on page 191
- "write memory" on page 192
- "write terminal" on page 193

# autoboot enable

**Overview**

This command enables the device to restore a release file and/or a configuration file from an SD card or USB storage device.

When the Autoboot feature is enabled, the device looks for a special file called autoboot.txt on the external media. If this file exists, the device will check the key and values in the file and recover the device with a new release file and/or configuration file from the external media. An example of a valid autoboot.txt file is shown in the following figure.

Figure 3-1: Example autoboot.txt file

```
[AlliedWare Plus]
Copy_from_external_media_enabled=yes
Boot_Release=AR3050S-5.5.0-2.1.rel
Boot_Config=network1.cfg
```

Use the **no** variant of this command to disable the Autoboot feature.

**Syntax**

`autoboot enable`

`no autoboot enable`

**Default**

The Autoboot feature operates the first time the device is powered up in the field, after which the feature is disabled by default.

**Mode**

Global Configuration

**Example**

To enable the Autoboot feature, use the command:

```
awplus# configure terminal
awplus(config)# autoboot enable
```

**Related commands**

create autoboot

show autoboot

show boot

# boot config-file

**Overview** Use this command to set the configuration file to use during the next boot cycle.

Use the **no** variant of this command to remove the configuration file.

**Syntax**

```
boot config-file <filepath-filename>
no boot config-file
```

| Parameter | Description |
|---|---|
| *<filepath-filename>* | Filepath and name of a configuration file.<br>The specified configuration file must exist in the specified filesystem.<br>Valid configuration files must have a **.cfg** extension. |

**Mode** Global Configuration

**Usage notes** You can only specify that the configuration file is on external memory (an SD card or USB storage device) if there is a backup configuration file already specified in flash. If you attempt to set the configuration file on external memory and a backup configuration file is not specified in flash, the following error message is displayed:

```
% Backup configuration files must be stored in the flash
filesystem
```

In addition, you can only specify that the configuration file is on an SD card if the card is writable.

For an explanation of the configuration fallback order, see the File Management Feature Overview and Configuration Guide.

**Examples** To run the configuration file “branch.cfg” the next time the device boots up, when “branch.cfg” is stored on the device’s flash filesystem, use the commands:

```
awplus# configure terminal
awplus(config)# boot config-file flash:/branch.cfg
```

To stop running the configuration file “branch.cfg” when the device boots up, when “branch.cfg” is stored on the device’s flash filesystem, use the commands:

```
awplus# configure terminal
awplus(config)# no boot config-file flash:/branch.cfg
```

To run the configuration file “branch.cfg” the next time the device boots up, when “branch.cfg” is stored on an SD card, use the commands:

```
awplus# configure terminal
awplus(config)# boot config-file card:/branch.cfg
```

To stop running the configuration file “branch.cfg” when the device boots up, when “branch.cfg” is stored on an SD card, use the commands:

```
awplus# configure terminal
awplus(config)# no boot config-file card:/branch.cfg
```

To run the configuration file “branch.cfg” the next time the device boots up, when “branch.cfg” is stored on a USB storage device, use the commands:

```
awplus# configure terminal
awplus(config)# boot config-file usb:/branch.cfg
```

To stop running the configuration file “branch.cfg” when the device boots up, when “branch.cfg” is stored on a USB storage device, use the commands:

```
awplus# configure terminal
awplus(config)# no boot config-file usb:/branch.cfg
```

**Related commands**

boot config-file backup

boot system

boot system backup

show boot

# boot config-file backup

**Overview**

Use this command to set a backup configuration file to use if the main configuration file cannot be accessed.

Use the **no** variant of this command to remove the backup configuration file.

**Syntax**

```
boot config-file backup <filepath-filename>
no boot config-file backup
```

| Parameter | Description |
|---|---|
| *<filepath-filename>* | Filepath and name of a backup configuration file. Backup configuration files must be in the flash filesystem. Valid backup configuration files must have a **.cfg** extension. |
| backup | The specified file is a backup configuration file. |

**Mode**

Global Configuration

**Usage notes**

For an explRSanation of the configuration fallback order, see the File Management Feature Overview and Configuration Guide.

**Examples**

To set the configuration file backup.cfg as the backup to the main configuration file, use the commands:

```
awplus# configure terminal
awplus(config)# boot config-file backup flash:/backup.cfg
```

To remove the configuration file backup.cfg as the backup to the main configuration file, use the commands:

```
awplus# configure terminal
awplus(config)# no boot config-file backup flash:/backup.cfg
```

**Related commands**

boot config-file

boot system

boot system backup

show boot

# boot system

**Overview** Use this command to set the release file to load during the next boot cycle.

Use the **no** variant of this command to stop specifying a primary release file to boot from. If the device boots up with no release file set, it will use autoboot or the backup release file if either of those are configured, or you can use the boot menu to select a release file source. To access the boot menu, type Ctrl-B at bootup.

**Syntax**

```
boot system <filepath-filename>
no boot system
```

| Parameter | Description |
|---|---|
| *<filepath-filename>* | Filepath and name of a release file.<br>The specified release file must exist and must be stored in the root directory of the specified filesystem.<br>Valid release files must have a **.rel** extension. |

**Mode** Global Configuration

**Usage notes** You can only specify that the release file is on external memory (an SD card or USB storage device) if there is a backup release file already specified in flash. If you attempt to set the release file on external memory and a backup release file is not specified in flash, an error message like the following one is displayed:

```
% A backup boot image must be set before setting a current boot
image on card
```

In addition, you can only specify that the configuration file is on an SD card if the card is writable.

**Examples** To boot up with the release file AR3050S-5.5.0-2.1.rel the next time the device boots up, when the release file is stored on the device's flash filesystem, use the commands:

```
awplus# configure terminal
awplus(config)# boot system flash:/AR3050S-5.5.0-2.1.rel
```

To run the release file AR3050S-5.5.0-2.1.rel the next time the device boots up, when the release file is stored on an SD card, use the commands:

```
awplus# configure terminal
awplus(config)# boot system card:/AR3050S-5.5.0-2.1.rel
```

To run the release file AR3050S-5.5.0-2.1.rel the next time the device boots up, when the release file is stored on a USB storage device, use the commands:

```
awplus# configure terminal
awplus(config)# boot system usb:/AR3050S-5.5.0-2.1.rel
```

**Related commands**

boot config-file

boot config-file backup

boot system backup

show boot

# boot system backup

**Overview** Use this command to set a backup release file to load if the main release file cannot be loaded.

Use the **no** variant of this command to stop specifying a backup release file.

**Syntax**

```
boot system backup <filepath-filename>
no boot system backup
```

| Parameter | Description |
|---|---|
| *<filepath-filename>* | Filepath and name of a backup release file.<br>Backup release files must be in the Flash filesystem.<br>Valid release files must have a **.rel** extension. |
| backup | The specified file is a backup release file. |

**Mode** Global Configuration

**Examples** To specify the file AR3050S-5.5.0-1.1.rel as the backup to the main release file, use the commands:

```
awplus# configure terminal
awplus(config)# boot system backup flash:/AR3050S-5.5.0-1.1.rel
```

To stop specifying a backup to the main release file, use the commands:

```
awplus# configure terminal
awplus(config)# no boot system backup
```

**Related commands**

boot config-file

boot config-file backup

boot system

show boot

# cd

**Overview** This command changes the current working directory.

**Syntax** `cd <directory-name>`

| Parameter | Description |
|---|---|
| *<directory-name>* | Name and path of the directory. |

**Mode** Privileged Exec

**Example** To change to the directory called `images`, use the command:

```
awplus# cd images
```

**Related commands**

dir

pwd

show file systems

# copy (filename)

**Overview** This command copies a file. This allows you to:

- copy files from your device to a remote device
- copy files from a remote device to your device
- copy files stored on Flash memory to or from a different memory type, such as an SD card
- copy files stored on Flash memory to or from a different memory type, such as a USB storage device
- create two copies of the same file on your device

**Syntax**

```
copy [force] <source-name> <destination-name>
```

| Parameter | Description |
|---|---|
| `force` | This parameter forces the copy command to overwrite the destination file, if it already exists, without prompting the user for confirmation. |
| *<source-name>* | The filename and path of the source file. See Introduction on page 142 for valid syntax. |
| *<destination-name>* | The filename and path for the destination file. See Introduction on page 142 for valid syntax. |

**Mode** Privileged Exec

**Examples** To use TFTP to copy the file “bob.key” into the current directory from the remote server at 10.0.0.1, use the command:

```
awplus# copy tftp://10.0.0.1/bob.key bob.key
```

To use SFTP to copy the file “new.cfg” into the current directory from a remote server at 10.0.1.2, use the command:

```
awplus# copy sftp://10.0.1.2/new.cfg bob.key
```

To use SCP with the username “beth” to copy the file old.cfg into the directory config_files on a remote server that is listening on TCP port 2000, use the command:

```
awplus# copy scp://beth@serv:2000/config_files/old.cfg old.cfg
```

To copy the file “newconfig.cfg” onto your device’s Flash from an SD (or SDHC) Card, use the command:

```
awplus# copy card:/newconfig.cfg flash:/newconfig.cfg
```

To copy the file “newconfig.cfg” to an SD (or SDHC) Card from your device’s Flash, use the command:

```
awplus# copy flash:/newconfig.cfg card:/newconfig.cfg
```

To copy the file "config.cfg" into the current directory from an SD (or SDHC) Card, and rename it to "configtest.cfg", use the command:

```
awplus# copy card:/config.cfg configtest.cfg
```

To copy the file "newconfig.cfg" onto your device's Flash from a USB storage device, use the command:

```
awplus# copy usb:/newconfig.cfg flash:/newconfig.cfg
```

To copy the file "newconfig.cfg" to a USB storage device from your device's Flash, use the command:

```
awplus# copy flash:/newconfig.cfg usb:/newconfig.cfg
```

To copy the file "config.cfg" into the current directory from a USB storage device, and rename it to "configtest.cfg", use the command:

```
awplus# copy usb:/config.cfg configtest.cfg
```

To copy the file "config.cfg" into the current directory from a remote file server, and rename it to "configtest.cfg", use the command:

```
awplus# copy fserver:/config.cfg configtest.cfg
```

On an AMF network, to copy the device GUI file from the AMF master to the Flash memory of 'node_1', use the command:

```
master# copy awplus-gui_549_13.gui node_1.atmf/flash:
```

**Related commands**

copy zmodem

copy buffered-log

copy permanent-log

edit (filename)

show file systems

# copy debug

**Overview** This command copies a specified debug file to a destination file.

**Syntax**

```
copy debug
{<destination-name>|card|debug|flash|nvs|scp|tftp|usb}
{<source-name>|card|debug|flash|nvs|scp|tftp|usb}
```

| Parameter | Description |
|---|---|
| *<destination-name>* | The filename and path where you would like the debug output saved. See Introduction on page 142 for valid syntax. |
| *<source-name>* | The filename and path where the debug output originates. See the Introduction to this chapter for valid syntax. |

**Mode** Privileged Exec

**Example** To copy debug output to a file on flash called “my-debug”, use the following command:

```
awplus# copy debug flash:my-debug
```

To copy debug output to an SD (or SDHC) card with a filename “my-debug”, use the following command:

```
awplus# copy debug card:my-debug
```

To copy debug output to a USB storage device with a filename “my-debug”, use the following command:

```
awplus# copy debug usb:my-debug
```

**Output** Figure 3-2: CLI prompt after entering the **copy debug** command

```
Enter source file name []:
```

**Related commands** delete debug

move debug

# copy running-config

**Overview** This command copies the running-config to a destination file, or copies a source file into the running-config. Commands entered in the running-config do not survive a device reboot unless they are saved in a configuration file.

**Syntax**

```
copy <source-name> running-config
copy running-config [<destination-name>]
copy running-config startup-config
```

| Parameter | Description |
|---|---|
| *<source-name>* | The filename and path of a configuration file. This must be a valid configuration file with a **.cfg** filename extension. Specify this when you want the script in the file to become the new running-config. See Introduction on page 142 for valid syntax. |
| *<destination-name>* | The filename and path where you would like the current running-config saved. This command creates a file if no file exists with the specified filename. If a file already exists, then the CLI prompts you before overwriting the file. See Introduction on page 142 for valid syntax. If you do not specify a file name, the device saves the running-config to a file called default.cfg. |
| `startup-config` | Copies the running-config into the file set as the current startup-config file. |

**Mode** Privileged Exec

**Examples** To copy the running-config into the startup-config, use the command:

```
awplus# copy running-config startup-config
```

To copy the file 'layer3.cfg' into the running-config, use the command:

```
awplus# copy layer3.cfg running-config
```

To use SCP to copy the running-config as 'current.cfg' to the remote server listening on TCP port 2000, use the command:

```
awplus# copy running-config
scp://user@server:2000/config_files/current.cfg
```

**Related commands**

copy startup-config

write file

write memory

# copy startup-config

**Overview** This command copies the startup-config script into a destination file, or alternatively copies a configuration script from a source file into the startup-config file.

**Syntax**

```
copy <source-name> startup-config
copy startup-config <destination-name>
```

| Parameter | Description |
|---|---|
| *<source-name>* | The filename and path of a configuration file. This must be a valid configuration file with a **.cfg** filename extension. Specify this to copy the script in the file into the startup-config file. Note that this does not make the copied file the new startup file, so any further changes made in the configuration file are not added to the startup-config file unless you reuse this command. See Introduction on page 142 for valid syntax. |
| *<destination-name>* | The destination and filename that you are saving the startup- config as. This command creates a file if no file exists with the specified filename. If a file already exists, then the CLI prompts you before overwriting the file. See Introduction on page 142 for valid syntax. |

**Mode** Privileged Exec

**Examples** To copy the file 'Layer3.cfg' to the startup-config, use the command:

```
awplus# copy Layer3.cfg startup-config
```

To copy the startup-config as the file 'oldconfig.cfg' in the current directory, use the command:

```
awplus# copy startup-config oldconfig.cfg
```

**Related commands** copy running-config

# copy zmodem

**Overview** This command allows you to copy files using ZMODEM using Minicom. ZMODEM works over a serial connection and does not need any interfaces configured to do a file transfer.

**Syntax**

```
copy <source-name> zmodem
copy zmodem
```

| Parameter | Description |
|---|---|
| *<source-name>* | The filename and path of the source file. See Introduction on page 142 for valid syntax. |

**Mode** Privileged Exec

**Example** To copy the local file 'asuka.key' using ZMODEM, use the command:

```
awplus# copy asuka.key zmodem
```

**Related commands**

copy (filename)

show file systems

# create autoboot

**Overview**

Use this command to create an autoboot.txt file on an external storage device. This command will automatically ensure that the keys and values that are expected in this file are correct. After the file is created the **create autoboot** command will copy the current release and configuration files across to the external storage device. The external storage device is then available to restore a release file and/or a configuration file to the device.

**Syntax**

```
create autoboot card
create autoboot usb
```

**Mode**

Privileged Exec

**Example**

To create an autoboot.txt file on an SD card, use the command:

```
awplus# create autoboot card
```

To create an autoboot.txt file on a USB storage device, use the command:

```
awplus# create autoboot usb
```

**Related commands**

autoboot enable

show autoboot

show boot

# delete

**Overview** This command deletes files or directories.

**Syntax** `delete [force] [recursive] <filename>`

| Parameter | Description |
|---|---|
| `force` | Ignore nonexistent filenames and never prompt before deletion. |
| `recursive` | Remove the contents of directories recursively. |
| `<filename>` | The filename and path of the file to delete. See Introduction on page 142 for valid syntax. |

**Mode** Privileged Exec

**Examples** To delete the file `temp.cfg` from the current directory, use the command:

```
awplus# delete temp.cfg
```

To delete the read-only file `one.cfg` from the current directory, use the command:

```
awplus# delete force one.cfg
```

To delete the directory `old_configs`, which is not empty, use the command:

```
awplus# delete recursive old_configs
```

To delete the directory `new_configs`, which is not empty, without prompting if any read-only files are being deleted, use the command:

```
awplus# delete force recursive new_configs
```

**Related commands** erase startup-config

rmdir

# delete debug

**Overview** Use this command to delete a specified debug output file.

**Syntax** `delete debug <source-name>`

| Parameter | Description |
|---|---|
| *<source-name>* | The filename and path where the debug output originates. See Introduction on page 142 for valid URL syntax. |

**Mode** Privileged Exec

**Example** To delete debug output, use the following command:

```
awplus# delete debug
```

**Output** Figure 3-3: CLI prompt after entering the **delete debug** command

```
Enter source file name []:
```

**Related commands** copy debug

move debug

# dir

**Overview** This command lists the files on a filesystem. If you don't specify a directory or file, then this command lists the files in the current directory.

**Syntax**

```
dir [all] [recursive] [sort [reverse] [name|size|time]]
[<filename>|card|debug|flash|nvs|usb]
```

| Parameter | Description |
|---|---|
| `all` | List all files. |
| `recursive` | List the contents of directories recursively. |
| `sort` | Sort directory listing. |
| `reverse` | Sort using reverse order. |
| `name` | Sort by name. |
| `size` | Sort by size. |
| `time` | Sort by modification time (default). |
| `<filename>` | The name of the directory or file. If you don't specify a directory or file, then this command lists the files in the current directory. |
| `card` | SD (or SDHC) card root directory |
| `debug` | Debug root directory |
| `flash` | Flash memory root directory |
| `nvs` | NVS memory root directory |
| `usb` | USB storage device root directory |

**Mode** Privileged Exec

**Examples** To list the files in the current working directory, use the command:

```
awplus# dir
```

To list the non-hidden files in the root of the Flash filesystem, use the command:

```
awplus# dir flash
```

To list all the files in the root of the Flash filesystem, use the command:

```
awplus# dir all flash:
```

To list recursively the files in the Flash filesystem, use the command:

```
awplus# dir recursive flash:
```

To list the files in alphabetical order, use the command:

```
awplus# dir sort name
```

To list the files by size, smallest to largest, use the command:

```
awplus# dir sort reverse size
```

To sort the files by modification time, oldest to newest, use the command:

```
awplus# dir sort reverse time
```

**Output** Figure 3-4: Example output from the **dir** command

```
awplus#dir
       630 -rw- May 19 2016 23:36:31  example.cfg
  23652123 -rw- May 17 2016 03:41:18
       149 -rw- Feb  9 2016 00:40:35  exception.log
```

**Related commands**

cd

pwd

# edit

**Overview**

This command opens a text file in the AlliedWare Plus™ text editor. Once opened you can use the editor to alter to the file.

If a filename is specified and it already exists, then the editor opens it in the text editor.

If no filename is specified, the editor prompts you for one when you exit it.

Before starting the editor make sure your terminal, terminal emulation program, or Telnet client is 100% compatible with a VT100 terminal. The editor uses VT100 control sequences to display text on the terminal.

For more information about using the editor, including control sequences, see the File Management Feature Overview and Configuration Guide.

**Syntax**

`edit [<filename>]`

| Parameter | Description |
|---|---|
| *<filename>* | Name of a file in the local Flash filesystem. |

**Mode**

Privileged Exec

**Examples**

To create and edit a new text file, use the command:

```
awplus# edit
```

To edit the existing configuration file `myconfig.cfg` stored on your device's Flash memory, use the command:

```
awplus# edit myconfig.cfg
```

**Related commands**

edit (filename)

show file

# edit (filename)

**Overview**

This command opens a remote text file as read-only in the AlliedWare Plus™ text editor.

Before starting the editor make sure your terminal, terminal emulation program, or Telnet client is 100% compatible with a VT100 terminal. The editor uses VT100 control sequences to display text on the terminal.

**Syntax**

`edit <filename>`

| Parameter | Description |
|---|---|
| `<filename>` | The filename and path of the remote file. See Introduction on page 142 for valid syntax. |

**Mode**

Privileged Exec

**Example**

To view the file `bob.key` stored in the security directory of a TFTP server, use the command:

```
awplus# edit tftp://security/bob.key
```

**Related commands**

copy (filename)

edit

show file

# erase factory-default

**Overview**

This command erases all data from NVS and all data from flash **except** the following:

- the boot release file (a .rel file) and its release setting file
- all license files
- the latest GUI release file

The device is then rebooted and returned to its factory default condition. The device can then be used for AMF automatic node recovery.

**Syntax**

```
erase factory-default
```

**Mode**

Privileged Exec

**Usage notes**

This command is an alias to the atmf cleanup command.

**Example**

To erase data, use the command:

```
Node_1# erase factory-default
This command will erase all NVS, all flash contents except for
the boot release, a GUI resource file, and any license files,
and then reboot the switch. Continue? (y/n):y
```

**Related commands**

atmf cleanup

# erase startup-config

**Overview**

This command deletes the file that is set as the startup-config file, which is the configuration file that the system runs when it boots up.

At the next restart, the device loads the default configuration file, default.cfg. If default.cfg no longer exists, then the device loads with the factory default configuration. This provides a mechanism for you to return the device to the factory default settings.

**Syntax**

```
erase startup-config
```

**Mode**

Privileged Exec

**Example**

To delete the file currently set as the startup-config, use the command:

```
awplus# erase startup-config
```

**Related commands**

boot config-file backup

copy running-config

copy startup-config

show boot

# ip tftp source-interface

**Overview**

Use this command to manually specify the IP address that all TFTP requests originate from. This is useful in network configurations where TFTP servers only accept requests from certain devices, or where the server cannot dynamically determine the source of the request.

Use the **no** variant of this command to stop specifying a source.

**Syntax**

```
ip tftp source-interface [<interface>|<ip-add>]
no ip tftp source-interface
```

| Parameter | Description |
|---|---|
| *<interface>* | The interface that TFTP requests originate from. The device will use the IP address of this interface as its source IP address.<br>You can specify any interface that can have an IP address attached to it (e.g. a VLAN, PPP or Eth interface). |
| *<ip-add>* | The IP address that TFTP requests originate from, in dotted decimal format |

**Default**

There is no default source specified.

**Mode**

Global Configuration

**Usage**

This command is helpful in network configurations where TFTP traffic needs to traverse point-to-point links or subnets within your network, and you do not want to propagate those point-to-point links through your routing tables.

In those circumstances, the TFTP server cannot dynamically determine the source of the TFTP request, and therefore cannot send the requested data to the correct device. Specifying a source interface or address enables the TFTP server to send the data correctly.

**Example**

To specify that TFTP requests originate from the IP address 192.0.2.1, use the following commands:

```
awplus# configure terminal
awplus(config)# ip tftp source-interface 192.0.2.1
```

**Related commands**

copy (filename)

# ipv6 tftp source-interface

**Overview** Use this command to manually specify the IPv6 address that all TFTP requests originate from. This is useful in network configurations where TFTP servers only accept requests from certain devices, or where the server cannot dynamically determine the source of the request.

Use the **no** variant of this command to stop specifying a source.

**Syntax**

```
ipv6 tftp source-interface [<interface>|<ipv6-add>]
no ipv6 tftp source-interface
```

| Parameter | Description |
|---|---|
| *<interface>* | The interface that TFTP requests originate from. The device will use the IPv6 address of this interface as its source IPv6 address. You can specify any interface that can have an IPv6 address attached to it (e.g. a VLAN, PPP or Eth interface).<br>s |
| *<ipv6-add>* | The IPv6 address that TFTP requests originate from, in the format x:x::x:x, for example, 2001:db8::8a2e:7334. |

**Default** There is no default source specified.

**Mode** Global Configuration

**Usage** This command is helpful in network configurations where TFTP traffic needs to traverse point-to-point links or subnets within your network, and you do not want to propagate those point-to-point links through your routing tables.

In those circumstances, the TFTP server cannot dynamically determine the source of the TFTP request, and therefore cannot send the requested data to the correct device. Specifying a source interface or address enables the TFTP server to send the data correctly.

**Example** To specify that TFTP requests originate from the IPv6 address 2001:db8::8a2e:7334, use the following commands:

```
awplus# configure terminal
awplus(config)# ipv6 tftp source-interface 2001:db8::8a2e:7334
```

**Related commands** copy (filename)

# mkdir

**Overview** This command makes a new directory.

**Syntax** `mkdir <name>`

| Parameter | Description |
|---|---|
| *<name>* | The name and path of the directory that you are creating. |

**Mode** Privileged Exec

**Usage** You cannot name a directory or subdirectory **flash**, **nvs**, **usb**, **card**, **tftp**, **scp**, **sftp** or **http.** These keywords are reserved for tab completion when using various file commands.

**Example** To make a new directory called `images` in the current directory, use the command:

```
awplus# mkdir images
```

**Related commands**

cd

dir

pwd

# move

**Overview** This command renames or moves a file.

**Syntax** `move <source-name> <destination-name>`

| Parameter | Description |
|---|---|
| *<source-name>* | The filename and path of the source file. See Introduction on page 142 for valid syntax. |
| *<destination-name>* | The filename and path of the destination file. See Introduction on page 142 for valid syntax. |

**Mode** Privileged Exec

**Examples** To rename the file `temp.cfg` to `startup.cfg`, use the command:

```
awplus# move temp.cfg startup.cfg
```

To move the file `temp.cfg` from the root of the Flash filesystem to the directory `myconfigs`, use the command:

```
awplus# move temp.cfg myconfigs/temp.cfg
```

**Related commands**

delete

edit

show file

show file systems

# move debug

**Overview** This command moves a specified debug file to a destination debug file.

**Syntax** `move debug {<destination-name>|card|debug|nvs|flash|usb}`

| Parameter | Description |
|---|---|
| *<destination-name>* | The filename and path where you would like the debug output moved to. See Introduction on page 142 for valid syntax. |

**Mode** Privileged Exec

**Example** To move debug output into Flash memory with a filename "my-debug", use the following command:

```
awplus# move debug flash:my-debug
```

To move debug output onto an SD (or SDHC) card with a filename "my-debug", use the following command:

```
awplus# move debug card:my-debug
```

To move debug output onto a USB storage device with a filename "my-debug", use the following command:

```
awplus# move debug usb:my-debug
```

**Output** Figure 3-5: CLI prompt after entering the **move debug** command

```
Enter source file name []:
```

**Related commands** copy debug

delete debug

# pwd

**Overview** This command prints the current working directory.

**Syntax** `pwd`

**Mode** Privileged Exec

**Example** To print the current working directory, use the command:

```
awplus# pwd
```

**Related commands** cd

# rmdir

**Overview** This command removes a directory. This command only works on empty directories, unless you specify the optional **force** keyword.

**Syntax**

```
rmdir [force] <name>
```

| Parameter | Description |
|---|---|
| `force` | Optional keyword that allows you to delete directories that are not empty and contain files or subdirectories. |
| *<name>* | The name and path of the directory. |

**Mode** Privileged Exec

**Usage notes** You can use the CLI to access filesystems on a specific external memory device. See the Introduction on page 142 for syntax details.

**Examples** To remove the directory "images" from the top level of the Flash filesystem, use the command:

```
awplus# rmdir flash:/images
```

To create a directory called "level1" containing a subdirectory called "level2", and then force the removal of both directories, use the commands:

```
awplus# mkdir level1
awplus# mkdir level1/level2
awplus# rmdir force level1
```

**Related commands**

cd

dir

mkdir

pwd

# show autoboot

**Overview** This command displays the Autoboot configuration and status.

**Syntax** `show autoboot`

**Mode** Privileged Exec

**Example** To show the Autoboot configuration and status, use the command:

```
awplus# show autoboot
```

**Output** Figure 3-6: Example output from the **show autoboot** command

```
awplus#show autoboot
Autoboot configuration
-------------------------------------------------------------------------------
Autoboot status                  : enabled
USB file autoboot.txt exists     : yes

Restore information on USB
Autoboot enable in autoboot.txt  : yes
Restore release file             : AR3050S-5.5.0-2.1.rel (file exists)
Restore configuration file       : network_1.cfg (file exists)
```

Figure 3-7: Example output from the **show autoboot** command when an external media source is not present

```
awplus#show autoboot
Autoboot configuration
-------------------------------------------------------------------------------
Autoboot status                        : disabled
External media source                  : media not found.
```

**Related commands**

autoboot enable

create autoboot

show boot

# show boot

**Overview** This command displays the current boot configuration.

We recommend that the currently running release is set as the current boot image.

**Syntax** `show boot`

**Mode** Privileged Exec

**Example** To show the current boot configuration, use the command:

```
awplus# show boot
```

**Output** Figure 3-8: Example output from **show boot**

```
awplus#show boot
Boot configuration
---------------------------------------------------------------
Current software   : AR3050S-5.5.0-2.1.rel
Current boot image : flash:/AR3050S-5.5.0-2.1.rel
Backup  boot image : flash:/AR3050S-5.5.0-1.1.rel
Default boot config: flash:/default.cfg
Current boot config: flash:/my.cfg (file exists)
Backup  boot config: flash:/backup.cfg (file not found)
Autoboot status    : enabled
```

Table 3-1: Parameters in the output from **show boot**

| Parameter | Description |
|---|---|
| `Current software` | The current software release that the device is using. |
| `Current boot image` | The boot image currently configured for use during the next boot cycle. |
| `Backup boot image` | The boot image to use during the next boot cycle if the device cannot load the main image. |
| `Default boot config` | The default startup configuration file. The device loads this configuration script if no file is set as the startup-config file. |
| `Current boot config` | The configuration file currently configured as the startup-config file. The device loads this configuration file during the next boot cycle if this file exists. |
| `Backup boot config` | The configuration file to use during the next boot cycle if the main configuration file cannot be loaded. |
| `Autoboot status` | The status of the Autoboot feature; either enabled or disabled. |

**Related commands**

autoboot enable

boot config-file backup

boot system backup

show autoboot

# show file

**Overview** This command displays the contents of a specified file.

**Syntax** `show file <filename>`

| Parameter | Description |
|---|---|
| *<filename>* | Name of a file on the local Flash filesystem, or name and directory path of a file. |

**Mode** Privileged Exec

**Example** To display the contents of the file `oldconfig.cfg`, which is in the current directory, use the command:

```
awplus# show file oldconfig.cfg
```

**Related commands**

edit

edit (filename)

show file systems

# show file systems

**Overview** This command lists the file systems and their utilization information where appropriate.

**Syntax** `show file systems`

**Mode** Privileged Exec

**Examples** To display the file systems, use the command:

```
awplus# show file systems
```

**Output** Figure 3-9: Example output from the **show file systems** command

```
awplus#show file systems
 Size(b)  Free(b)  Type   Flags  Prefixes   S/D/V   Lcl/Ntwk  Avail
-------------------------------------------------------------------
  63.0M    28.5M   flash     rw  flash:     static  local      Y
      -        -   system    rw  system:    virtual local      -
  10.0M     9.8M   debug     rw  debug:     static  local      Y
 499.0K   431.0K   nvs       rw  nvs:       static  local      Y
      -        -   tftp      rw  tftp:      -       network    -
      -        -   scp       rw  scp:       -       network    -
      -        -   sftp      ro  sftp:      -       network    -
      -        -   http      ro  http:      -       network    -
      -        -   rsync     rw  rsync:     -       network    -
```

**Table 4:** Parameters in the output of the **show file systems** command

| Parameter | Description |
|---|---|
| `Size (b)` | The total memory available to this file system. The units are given after the value and are M for Megabytes or k for kilobytes. |
| `Free (b)` | The total memory free within this file system. The units are given after the value and are M for Megabytes or K for kilobytes. |
| `Type` | The memory type used for this file system, such as:<br>flash<br>system<br>sdcard<br>usbstick<br>tftp<br>scp<br>sftp<br>http. |
| `Flags` | The file setting options: rw (read write), ro (read only). |

**Table 4:** Parameters in the output of the **show file systems** command (cont.)

| Parameter | Description |
|---|---|
| `Prefixes` | The prefixes used when entering commands to access the file systems, such as:<br>flash<br>system<br>card<br>usb<br>tftp<br>scp<br>sftp<br>http. |
| `S/D/V` | The memory type: Static, Dynamic, Virtual. |
| `Lcl / Ntwk` | Whether the memory is located locally or via a network connection. |
| `Avail` | Whether the memory is accessible: Y (yes), N (no), - (not applicable) |

**Related commands**

edit

edit (filename)

show file

# show running-config

**Overview** This command displays the current configuration of your device. Its output includes all non-default configuration. The default settings are not displayed.

***NOTE:*** *You can control the output by entering | or > at the end of the command:*

- To display only lines that contain a particular word, enter:

`| include <word>`

- To start the display at the first line that contains a particular word, enter:

`| begin <word>`

- To save the output to a file, enter:

`> <filename>`

**Syntax** `show running-config [full|<feature>]`

| Parameter | Description | |
|---|---|---|
| `full` | Display the running-config for all features. This is the default setting, so it is the same as entering **show running-config**. | |
| `<feature>` | Display only the configuration for a single feature. The features available depend on your device and will be some of the following list: | |
| | access-list | ACL configuration |
| | antivirus | Antivirus configuration |
| | application | Application configuration |
| | as-path | Autonomous system path filter configuration |
| | as-path access-list | Configuration of ACLs for AS path filtering |
| | atmf | Allied Telesis Management Framework configuration |
| | bgp | Border Gateway Protocol (BGP) configuration |
| | community-list | Community-list configuration |
| | crypto | Security-specific configuration |
| | dhcp | DHCP configuration |
| | dpi | Deep Packet Inspection configuration |
| | entity | Entity configuration |
| | firewall | Firewall configuration |
| | interface | Interface configuration. See show running-config interface for further options. |

| Parameter | Description | |
|---|---|---|
| | ip | Internet Protocol (IP) configuration |
| | ip pim dense-mode | PIM-DM configuration |
| | ip pim sparse-mode | PIM-SM configuration |
| | ip route | IP static route configuration |
| | ip-reputation | IP Reputation configuration |
| | ips | IPS configuration |
| | ipsec | Internet Protocol Security (IPsec) configuration |
| | ipv6 | Internet Protocol version 6 (IPv6) configuration |
| | ipv6 access-list | IPv6 ACL configuration |
| | ipv6 mroute | IPv6 multicast route configuration |
| | ipv6 prefix-list | IPv6 prefix list configuration |
| | ipv6 route | IPv6 static route configuration |
| | isakmp | Internet Security Association Key Management Protocol (ISAKMP) configuration |
| | key chain | Authentication key management configuration |
| | l2tp-profile | L2TP tunnel profile configuration |
| | lldp | LLDP configuration |
| | log | Logging utility configuration |
| | malware-protection | Malware protection configuration |
| | nat | Network Address Translation configuration |
| | power-inline | Power over Ethernet (PoE) configuration |
| | policy-based-routing | Policy-based routing (PBR) configuration |
| | pppoe-ac | PPPoE access concentrator configuration |
| | prefix-list | Prefix-list configuration |
| | route-map | Route-map configuration |
| | router | Router configuration |
| | router-id | Configuration of the router identifier for this system |
| | security-password | Strong password security configuration |
| | snmp | SNMP configuration |
| | ssh | Secure Shell configuration |

| Parameter | Description | |
|---|---|---|
| | switch | Switch configuration |
| | web-control | Web Control configuration |

**Mode** Privileged Exec and Global Configuration

**Example** To display the current configuration of your device, use the command:

```
awplus# show running-config
```

**Output** Figure 3-10: Example output from **show running-config**

```
awplus#show running-config
!
service password-encryption
!
no banner motd
!
username manager privilege 15 password 8 $1$bJoVec4D$JwOJGPr7YqoExA0GVasdE0
!
service ssh
!
no service telnet
!
service http
!
no clock timezone

...

line con 0
line vty 0 4
!
end
```

**Related commands** copy running-config

show running-config interface

# show running-config interface

**Overview** This command displays the current configuration of one or more interfaces on the device.

You can optionally limit the command output to display only information for a given protocol or feature. The features available depend on your device and will be a subset of the features listed in the table below.

**Syntax**

```
show running-config interface
show running-config interface <interface-list>
show running-config interface <interface-list> <feature>
show running-config interface <interface-list> ip <feature>
show running-config interface <interface-list> ipv6 <feature>
```

| Parameter | Description |
|---|---|
| *<interface-list>* | The interfaces or ports to display information about. An interface-list can be:<br>• a PPP interface (e.g. ppp0)<br>• an Eth interface (e.g. eth1)<br>• an 802.1Q Ethernet sub-interface (e.g. eth1.10, where '10' is the VLAN ID specified by the **encapsulation dot1q** command)<br>• a VLAN (e.g. vlan2)<br>• a switchport (e.g. port1.0.4)<br>• a static channel group (e.g. sa2)<br>• a dynamic (LACP) channel group (e.g. po2)<br>• a bridge interface (e.g. br0)<br>• a tunnel interface (e.g. tunnel0)<br>• a 3G cellular interface (e.g. cellular0)<br>• a WWAN interface (e.g wwan0)<br>• the loopback interface (lo)<br>• a continuous range of interfaces, separated by a hyphen (e.g. ppp2-4)<br>• a comma-separated list (e.g. ppp0,ppp2-4). Do not mix interface types in a list.<br>The specified interfaces must exist. |
| `cfm` | Displays running configuration for CFM (Connectivity Fault Management) for the specified interfaces. |
| `dot1x` | Displays running configuration for 802.1X port authentication for the specified interfaces. |
| `lacp` | Displays running configuration for LACP (Link Aggregation Control Protocol) for the specified interfaces. |

| Parameter | Description |
|---|---|
| `ip igmp` | Displays running configuration for IGMP (Internet Group Management Protocol) for the specified interfaces. |
| `ip multicast` | Displays running configuration for general multicast settings for the specified interfaces. |
| `ip pim sparse-mode` | Displays running configuration for PIM-SM (Protocol Independent Multicast - Sparse Mode) for the specified interfaces. |
| `ip pim dense-mode` | Displays running configuration for PIM-DM (Protocol Independent Multicasting - Dense Mode) for the specified interfaces. |
| `mstp` | Displays running configuration for MSTP (Multiple Spanning Tree Protocol) for the specified interfaces. |
| `ospf` | Displays running configuration for OSPF (Open Shortest Path First) for the specified interfaces. |
| `rip` | Displays running configuration for RIP (Routing Information Protocol) for the specified interfaces. |
| `ipv6 rip` | Displays running configuration for RIPng (RIP for IPv6) for the specified interfaces. |
| `ipv6 ospf` | Displays running configuration for IPv6 OSPF (Open Shortest Path First) for the specified interfaces. |
| `ipv6 pim sparse-mode` | Displays running configuration for PIM-SM (Protocol Independent Multicast - Sparse Mode) for the specified interfaces. |
| `rstp` | Displays running configuration for RSTP (Rapid Spanning Tree Protocol) for the specified interfaces. |
| `stp` | Displays running configuration for STP (Spanning Tree Protocol) for the specified interfaces. |

**Mode** Privileged Exec and Global Configuration

**Default** Displays information for all protocols on all interfaces

**Examples** To display the current running configuration of your device for eth1, use the command:

```
awplus# show running-config interface eth1
```

To display the current running configuration of a device for vlan2, use the command:

```
awplus# show running-config interface vlan2
```

To display the current OSPF configuration of your device for ports 1 to 4, use the command:

```
awplus# show running-config interface port1.0.1-port1.0.4 ospf
```

**Output** Figure 3-11: Example output from a **show running-config interface ppp0** command

```
awplus#show running-config interface ppp0
!
interface ppp0
 ipv6 address 2001:db9::a3/64
 ipv6 enable
 snmp trap link-status
!
```

**Related commands**

copy running-config

show running-config

# show startup-config

**Overview** This command displays the contents of the start-up configuration file, which is the file that the device runs on start-up.

For information on filtering and saving command output, see the "Getting Started with AlliedWare Plus" Feature Overview and Configuration Guide.

**Syntax** `show startup-config`

**Mode** Privileged Exec

**Example** To display the contents of the current start-up configuration file, use the command:

```
awplus# show startup-config
```

**Output** Figure 3-12: Example output from the **show startup-config** command

```
awplus#show startup-config
!
service password-encryption
!
no banner motd
!
username manager privilege 15 password 8 $1$bJoVec4D$JwOJGPr7YqoExA0GVasdE0
!
service ssh
!
no service telnet
!
service http
!
no clock timezone

...

line con 0
line vty 0 4
!
end
```

**Related commands**

boot config-file backup

copy running-config

copy startup-config

erase startup-config

show boot

# show version

**Overview** This command displays the version number and copyright details of the current AlliedWare Plus™ OS your device is running.

**Syntax**

```
show version
```

**Mode** User Exec and Privileged Exec

**Example** To display the version details of your currently installed software, use the command:

```
awplus# show version
```

**Related commands**

boot system backup

show boot

# unmount

**Overview** Use this command to unmount an external storage device. We recommend you unmount storage devices before removing them, to avoid file corruption. This is especially important if files may be automatically written to the storage device, such as external log files or AMF backup files.

**Syntax**

```
unmount card
unmount usb
```

| Parameter | Description |
|---|---|
| `card` | Unmount the SD card. |
| `usb` | Unmount the USB storage device. |

**Mode** Privileged Exec

**Example** To unmount an SD card and safely remove it from the device, use the command:

```
awplus# unmount card
```

To unmount a USB storage device and safely remove it from the device, use the command:

```
awplus# unmount usb
```

**Related commands**

clear log external

log external

show file systems

show log config

show log external

**Command changes** Version 5.4.7-1.1: command added

# write file

**Overview** This command copies the running-config into the file that is set as the current startup-config file. This command is a synonym of the **write memory** and **copy running-config startup-config** commands.

**Syntax**

```
write [file]
```

**Mode** Privileged Exec

**Example** To write configuration data to the start-up configuration file, use the command:

```
awplus# write file
```

**Related commands**

copy running-config

write memory

show running-config

# write memory

**Overview** This command copies the running-config into the file that is set as the current startup-config file. This command is a synonym of the **write file** and **copy running-config startup-config** commands.

**Syntax**

```
write [memory]
```

**Mode** Privileged Exec

**Example** To write configuration data to the start-up configuration file, use the command:

```
awplus# write memory
```

**Related commands**

copy running-config

write file

show running-config

# write terminal

**Overview** This command displays the current configuration of the device. This command is a synonym of the show running-config command.

**Syntax**

```
write terminal
```

**Mode** Privileged Exec

**Example** To display the current configuration of your device, use the command:

```
awplus# write terminal
```

**Related commands** show running-config

# 4 User Access Commands

## Introduction

**Overview** This chapter provides an alphabetical reference of commands used to configure user access.

**Command List**


- "aaa authentication enable default local" on page 196
- "aaa local authentication attempts lockout-time" on page 197
- "aaa local authentication attempts max-fail" on page 198
- "aaa login fail-delay" on page 199
- "clear aaa local user lockout" on page 200
- "clear line console" on page 201
- "clear line vty" on page 202
- "enable password" on page 203
- "enable secret (deprecated)" on page 206
- "exec-timeout" on page 207
- "flowcontrol hardware (asyn/console)" on page 209
- "length (asyn)" on page 211
- "line" on page 212
- "privilege level" on page 214
- "security-password history" on page 215
- "security-password forced-change" on page 216
- "security-password lifetime" on page 217
- "security-password min-lifetime-enforce" on page 218
- "security-password minimum-categories" on page 219
- "security-password minimum-length" on page 220

- "security-password reject-expired-pwd" on page 221
- "security-password warning" on page 222
- "service advanced-vty" on page 223
- "service password-encryption" on page 224
- "service telnet" on page 225
- "service terminal-length (deleted)" on page 226
- "show aaa local user locked" on page 227
- "show privilege" on page 228
- "show security-password configuration" on page 229
- "show security-password user" on page 230
- "show telnet" on page 231
- "show users" on page 232
- "telnet" on page 233
- "telnet server" on page 234
- "terminal length" on page 235
- "terminal resize" on page 236
- "username" on page 237

# aaa authentication enable default local

**Overview**

This command enables local privilege level authentication.

Use the **no** variant of this command to disable local privilege level authentication.

**Syntax**

```
aaa authentication enable default local
no aaa authentication enable default
```

**Default**

Local privilege level authentication is enabled by default.

**Mode**

Global Configuration

**Usage notes**

The privilege level configured for a particular user in the local user database is the privilege threshold above which the user is prompted for an enable (Privileged Exec mode) command.

**Examples**

To enable local privilege level authentication, use the following commands:

```
awplus# configure terminal
awplus(config)# aaa authentication enable default local
```

To disable local privilege level authentication, use the following commands:

```
awplus# configure terminal
awplus(config)# no aaa authentication enable default
```

**Related commands**

aaa authentication login

enable (Privileged Exec mode)

enable password

enable secret (deprecated)

# aaa local authentication attempts lockout-time

**Overview**

This command configures the duration of the user lockout period.

Use the **no** variant of this command to restore the duration of the user lockout period to its default of 300 seconds (5 minutes).

**Syntax**

```
aaa local authentication attempts lockout-time <lockout-time>
no aaa local authentication attempts lockout-time
```

| Parameter | Description |
|---|---|
| *<lockout-time>* | <0-10000>. Time in seconds to lockout the user. |

**Mode**

Global Configuration

**Default**

The default for the lockout-time is 300 seconds (5 minutes).

**Usage notes**

While locked out all attempts to login with the locked account will fail. The lockout can be manually cleared by another privileged account using the clear aaa local user lockout command.

**Examples**

To configure the lockout period to 10 minutes (600 seconds), use the commands:

```
awplus# configure terminal
awplus(config)# aaa local authentication attempts lockout-time
600
```

To restore the default lockout period of 5 minutes (300 seconds), use the commands:

```
awplus# configure terminal
awplus(config)# no aaa local authentication attempts
lockout-time
```

**Related commands**

aaa local authentication attempts max-fail

# aaa local authentication attempts max-fail

**Overview**

This command configures the maximum number of failed login attempts before a user account is locked out. Every time a login attempt fails the failed login counter is incremented.

Use the **no** variant of this command to restore the maximum number of failed login attempts to the default setting (five failed login attempts).

**Syntax**

```
aaa local authentication attempts max-fail <failed-logins>
no aaa local authentication attempts max-fail
```

| Parameter | Description |
|---|---|
| *<failed-logins>* | <1-32>. Number of login failures allowed before locking out a user. |

**Mode**

Global Configuration

**Default**

The default for the maximum number of failed login attempts is five failed login attempts.

**Usage**

When the failed login counter reaches the limit configured by this command that user account is locked out for a specified duration configured by the aaa local authentication attempts lockout-time command.

When a successful login occurs the failed login counter is reset to `0`. When a user account is locked out all attempts to login using that user account will fail.

**Examples**

To configure the number of login failures that will lock out a user account to two login attempts, use the commands:

```
awplus# configure terminal
awplus(config)# aaa local authentication attempts max-fail 2
```

To restore the number of login failures that will lock out a user account to the default number of login attempts (five login attempts), use the commands:

```
awplus# configure terminal
awplus(config)# no aaa local authentication attempts max-fail
```

**Related commands**

aaa local authentication attempts lockout-time

clear aaa local user lockout

# aaa login fail-delay

**Overview** Use this command to configure the minimum time period between failed login attempts. This setting applies to login attempts via the console, SSH and Telnet.

Use the **no** variant of this command to reset the minimum time period to its default value.

**Syntax**

```
aaa login fail-delay <1-10>
no aaa login fail-delay
```

| Parameter | Description |
|---|---|
| *<1-10>* | The minimum number of seconds required between login attempts |

**Default** 1 second

**Mode** Global configuration

**Example** To apply a delay of at least 5 seconds between login attempts, use the following commands:

```
awplus# configure terminal
awplus(config)# aaa login fail-delay 5
```

**Related commands**

aaa authentication login

aaa local authentication attempts lockout-time

clear aaa local user lockout

# clear aaa local user lockout

**Overview** Use this command to clear the lockout on a specific user account or all user accounts.

**Syntax**

```
clear aaa local user lockout {username <username>|all}
```

| Parameter | Description |
|---|---|
| `username` | Clear lockout for the specified user. |
| `<username>` | Specifies the user account. |
| `all` | Clear lockout for all user accounts. |

**Mode** Privileged Exec

**Examples** To unlock the user account 'bob' use the following command:

```
awplus# clear aaa local user lockout username bob
```

To unlock all user accounts use the following command:

```
awplus# clear aaa local user lockout all
```

**Related commands** aaa local authentication attempts lockout-time

# clear line console

**Overview** This command resets a console line. If a terminal session exists on the line then the terminal session is terminated. If console line settings have changed then the new settings are applied.

**Syntax**

```
clear line console 0
```

**Mode** Privileged Exec

**Example** To reset the console line (asyn), use the command:

```
awplus# clear line console 0
% The new settings for console line 0 have been applied
```

**Related commands**

clear line vty

flowcontrol hardware (asyn/console)

line

show users

# clear line vty

**Overview** This command resets a VTY line. If a session exists on the line then it is closed.

**Syntax**

```
clear line vty <0-32>
```

| Parameter | Description |
|---|---|
| *<0-32>* | Line number |

**Mode** Privileged Exec

**Example** To reset the first VTY line, use the command:

```
awplus# clear line vty 1
```

**Related commands**

privilege level

line

show telnet

show users

# enable password

**Overview** Use this command to set a local password to control access to elevated privilege levels.

Use the **no** version of the command to remove the password.

Note that the enable secret (deprecated) command is an outdated alias for the **enable password** command.

**Syntax**

```
enable password <password>
enable password level <1-15> <password>]
enable password 8 <encrypted-password>
enable password 8 level <1-15> 8 <encrypted-password>
no enable password [level <1-15>]
```

| Parameter | Description |
|---|---|
| *<password>* | Specifies the unencrypted password. |
| 8 | Specifies that an encrypted password will follow. |
| *<encrypted-password>* | Specifies the encrypted password. |
| `level` | Privilege level <1-15>. Level for which the password applies. You can specify up to 16 privilege levels, using numbers 1 through 15. Level 1 is normal EXEC-mode user privileges for User Exec mode. If this argument is not specified in the command or the **no** variant of the command, the privilege level defaults to 15 (enable mode privileges) for Privileged Exec mode. A privilege level of 7 can be set for intermediate CLI security. |

**Default** Level 15

**Mode** Global Configuration

**Usage notes** This command enables the Network Administrator to set a password for entering the Privileged Exec mode when using the enable (Privileged Exec mode) command. There are three methods to enable a password. In the examples below, for each method, note that the configuration is different and the configuration file output is different, but the password string to be used to enter the Privileged Exec mode with the **enable** command is the same (in this example, **mypasswd**).

A user can have an intermediate CLI security level set with this command for privilege level 7 to access all the show commands in Privileged Exec mode and all the commands in User Exec mode, but not any configuration commands in Privileged Exec mode.

**Entering plaintext passwords**

The plaintext password is a clear text string that appears in the configuration file as configured. For example:

```
awplus# configure terminal
awplus(config)# enable password mypasswd
awplus(config)# end
```

This results in the following show output, with the password shown in plaintext:

```
awplus#show run
Current configuration:
...
hostname awplus
enable password mypasswd
...
```

**Entering encrypted passwords**

You can configure an encrypted password using the service password-encryption command. First, use the **enable password**command to specify the string that you want to use as a password (in this example, **mypasswd**). Then, use the service password-encryption command to encrypt the specified string (**mypasswd**). The advantage of using an encrypted password is that the configuration file does not show **mypasswd**; it will only show the encrypted string **fU7zHzuutY2SA**.

For example:

```
awplus# configure terminal
awplus(config)# enable password mypasswd
awplus(config)# service password-encryption
awplus(config)# end
```

This results in the following show output:

```
awplus#show run
Current configuration:
...
hostname awplus
enable password 8 fU7zHzuutY2SA
service password-encryption
...
```

**Entering pre-encrypted passwords**

You can configure an encrypted password using the **<encrypted-password>** parameter (**8**). Use this method if you already know the encrypted string corresponding to the plaintext string that you want to use as a password. You do not have to use the service password-encryption command with this method. The output in the configuration file will show only the encrypted string, and not the text string. For example:

```
awplus# configure terminal
awplus(config)# enable password 8 fU7zHzuutY2SA
awplus(config)# end
```

This results in the following show output:

```
awplus#show run
Current configuration:
...
hostname awplus
enable password 8 fU7zHzuutY2SA
...
```

**Related commands**

enable (Privileged Exec mode)

enable secret (deprecated)

service password-encryption

privilege level

show privilege

username

show running-config

# enable secret (deprecated)

**Overview** This command has been deprecated. It has been replaced by the enable password command.

# exec-timeout

**Overview**

This command sets the interval your device waits for user input from either a console or VTY connection. Once the timeout interval is reached, the connection is dropped. This command sets the time limit when the console or VTY connection automatically logs off after no activity.

The **no** variant of this command removes a specified timeout and resets to the default timeout (10 minutes).

**Syntax**

```
exec-timeout {<minutes>} [<seconds>]
no exec-timeout
```

| Parameter | Description |
|---|---|
| *<minutes>* | <0-35791> Required integer timeout value in minutes |
| *<seconds>* | <0-2147483> Optional integer timeout value in seconds |

**Default**

The default for the **exec-timeout** command is 10 minutes and 0 seconds (**exec-timeout 10 0**).

**Mode**

Line Configuration

**Usage notes**

This command is used set the time the telnet session waits for an idle VTY session, before it times out. An **exec-timeout 0 0** setting will cause the telnet session to wait indefinitely. The command **exec-timeout 0 0** is useful while configuring a device, but reduces device security.

If no input is detected during the interval then the current connection resumes. If no connections exist then the terminal returns to an idle state and disconnects incoming sessions.

**Examples**

To set VTY connections to timeout after 2 minutes, 30 seconds if there is no response from the user, use the following commands:

```
awplus# configure terminal
awplus(config)# line vty 0 32
awplus(config-line)# exec-timeout 2 30
```

To reset the console connection to the default timeout of 10 minutes 0 seconds if there is no response from the user, use the following commands:

```
awplus# configure terminal
awplus(config)# line console 0
awplus(config-line)# no exec-timeout
```

**Validation Commands**

show running-config

**Related commands**

line

service telnet

# flowcontrol hardware (asyn/console)

**Overview** Use this command to enable RTS/CTS (Ready To Send/Clear To Send) hardware flow control on a terminal console line (asyn port) between the DTE (Data Terminal Equipment) and the DCE (Data Communications Equipment).

**Syntax**

```
flowcontrol hardware
no flowcontrol hardware
```

**Mode** Line Configuration

**Default** Hardware flow control is disabled by default.

**Usage notes** Hardware flow control makes use of the RTS and CTS control signals between the DTE and DCE where the rate of transmitted data is faster than the rate of received data. Flow control is a technique for ensuring that a transmitting entity does not overwhelm a receiving entity with data. When the buffers on the receiving device are full, a message is sent to the sending device to suspend the transmission until the data in the buffers has been processed.

Hardware flow control can be configured on terminal console lines (e.g. asyn0). For Reverse Telnet connections, hardware flow control must be configured to match on both the Access Server and the Remote Device. For terminal console sessions, hardware flow control must be configured to match on both the DTE and the DCE. Settings are saved in the running configuration. Changes are applied after reboot, clear line console, or after closing the session.

Use **show running-config** and **show startup-config** commands to view hardware flow control settings that take effect after reboot for a terminal console line. See the **show running-config** command output:

```
awplus#show running-config
!
line con 1
  speed 9600
  mode out 2001
  flowcontrol hardware
!
```

Note that line configuration commands do not take effect immediately. Line configuration commands take effect after one of the following commands or events:

- issuing a clear line console command
- issuing a reboot command
- logging out of the current session

**Examples**

To enable hardware flow control on terminal console line asyn0, use the commands:

```
awplus# configure terminal
awplus(config)# line console 0
awplus(config-line)# flowcontrol hardware
```

To disable hardware flow control on terminal console line asyn0, use the commands:

```
awplus# configure terminal
awplus(config)# line console 0
awplus(config-line)# no flowcontrol hardware
```

**Related commands**

clear line console

show running-config

speed (asyn)

# length (asyn)

**Overview**

Use this command to specify the number of rows of output that the device will display before pausing, for the console or VTY line that you are configuring.

The **no** variant of this command restores the length of a line (terminal session) attached to a console port or to a VTY to its default length of 22 rows.

**Syntax**

```
length <0-512>
no length
```

| Parameter | Description |
|---|---|
| *<0-512>* | Number of lines on screen. Specify 0 for no pausing. |

**Mode**

Line Configuration

**Default**

The length of a terminal session is 22 rows. The **no length** command restores the default.

**Usage notes**

If the output from a command is longer than the length of the line the output will be paused and the '–More–' prompt allows you to move to the next screen full of data.

A length of 0 will turn off pausing and data will be displayed to the console as long as there is data to display.

**Examples**

To set the terminal session length on the console to 10 rows, use the command:

```
awplus# configure terminal
awplus(config)# line console 0
awplus(config-line)# length 10
```

To reset the terminal session length on the console to the default (22 rows), use the command:

```
awplus# configure terminal
awplus(config)# line console 0
awplus(config-line)# no length
```

To display output to the console continuously, use the command:

```
awplus# configure terminal
awplus(config)# line console 0
awplus(config-line)# length 0
```

**Related commands**

terminal resize

terminal length

# line

**Overview** Use this command to enter line configuration mode for the specified VTYs or the console. The command prompt changes to show that the device is in Line Configuration mode.

**Syntax**

```
line vty <first-line> [<last-line>]
line console 0
```

| Parameter | Description |
|---|---|
| `<first-line>` | *<0-32>* Specify the first line number. |
| `<last-line>` | *<0-32>* Specify the last line number. |
| `console` | The console terminal line(s) for local access. |
| `vty` | Virtual terminal for remote console access. |

**Mode** Global Configuration

**Usage notes** This command puts you into Line Configuration mode. Once in Line Configuration mode, you can configure console and virtual terminal settings, including setting speed (asyn), length (asyn), privilege level, and authentication (login authentication) or accounting (accounting login) method lists.

To change the console (asyn) port speed, use this **line** command to enter Line Configuration mode before using the speed (asyn)command. Set the console speed (Baud rate) to match the transmission rate of the device connected to the console (asyn) port on your device.

Note that line configuration commands do not take effect immediately. Line configuration commands take effect after one of the following commands or events:

- issuing a clear line console command
- issuing a reboot command
- logging out of the current session

**Examples** To enter Line Configuration mode in order to configure all VTYs, use the commands:

```
awplus# configure terminal
awplus(config)# line vty 0 32
awplus(config-line)#
```

To enter Line Configuration mode to configure the console (asyn 0) port terminal line, use the commands:

```
awplus# configure terminal
awplus(config)# line console 0
awplus(config-line)#
```

**Related commands**

accounting login

clear line console

clear line vty

flowcontrol hardware (asyn/console)

length (asyn)

login authentication

privilege level

speed (asyn)

# privilege level

**Overview** This command sets a privilege level for VTY or console connections. The configured privilege level from this command overrides a specific user's initial privilege level at the console login.

**Syntax**

```
privilege level <1-15>
```

**Mode** Line Configuration

**Usage notes** You can set an intermediate CLI security level for a console user with this command by applying privilege level 7 to access all show commands in Privileged Exec and all User Exec commands. However, intermediate CLI security will not show configuration commands in Privileged Exec.

**Examples** To set the console connection to have the maximum privilege level, use the following commands:

```
awplus# configure terminal
awplus(config)# line console 0
awplus(config-line)# privilege level 15
```

To set all VTY connections to have the minimum privilege level, use the following commands:

```
awplus# configure terminal
awplus(config)# line vty 0 5
awplus(config-line)# privilege level 1
```

To set all VTY connections to have an intermediate CLI security level, to access all show commands, use the following commands:

```
awplus# configure terminal
awplus(config)# line vty 0 5
awplus(config-line)# privilege level 7
```

**Related commands**

enable password

line

show privilege

username

# security-password history

**Overview**

This command specifies the number of previous passwords that are unable to be reused. A new password is invalid if it matches a password retained in the password history.

The **no** variant of the command disables this feature.

**Syntax**

```
security-password history <0-15>
no security-password history
```

| Parameter | Description |
|---|---|
| *<0-15>* | The allowable range of previous passwords to match against. A value of *0* will disable the history functionality and is equivalent to the **no security-password history** command. If the history functionality is disabled, all users' password history is reset and all password history is lost. |

**Default**

The default history value is `0`, which will disable the history functionality.

**Mode**

Global Configuration

**Examples**

To restrict reuse of the three most recent passwords, use the command:

```
awplus# configure terminal
awplus(config)# security-password history 3
```

To allow the reuse of recent passwords, use the command:

```
awplus# configure terminal
awplus(config)# no security-password history
```

**Related commands**

security-password forced-change

security-password lifetime

security-password min-lifetime-enforce

security-password minimum-categories

security-password minimum-length

security-password reject-expired-pwd

security-password warning

show running-config security-password

show security-password configuration

show security-password user

# security-password forced-change

**Overview**

This command specifies whether or not a user is forced to change an expired password at the next login. If this feature is enabled, users whose passwords have expired are forced to change to a password that must comply with the current password security rules at the next login.

Note that to use this command, the lifetime feature must be enabled with the security-password lifetime command and the reject-expired-pwd feature must be disabled with the security-password reject-expired-pwd command.

The **no** variant of the command disables this feature.

**Syntax**

```
security-password forced-change
no security-password forced-change
```

**Default**

The forced-change feature is disabled by default.

**Mode**

Global Configuration

**Example**

To force a user to change their expired password at the next login, use the command:

```
awplus# configure terminal
awplus(config)# security-password forced-change
```

**Related commands**

security-password history

security-password lifetime

security-password min-lifetime-enforce

security-password minimum-categories

security-password minimum-length

security-password reject-expired-pwd

security-password warning

show running-config security-password

show security-password configuration

show security-password user

# security-password lifetime

**Overview** This command enables password expiry by specifying a password lifetime in days.

Note that when the password lifetime feature is disabled, it also disables the security-password forced-change command and the security-password warning command.

The **no** variant of the command disables this feature.

**Syntax**

```
security-password lifetime <0-1000>
no security-password lifetime
```

| Parameter | Description |
|---|---|
| *<0-1000>* | Password lifetime specified in days. A value of *0* will disable lifetime functionality and the password will never expire. This is equivalent to the **no security-password lifetime** command. |

**Default** The default password lifetime is `0`, which will disable the lifetime functionality.

**Mode** Global Configuration

**Example** To configure the password lifetime to 10 days, use the command:

```
awplus# configure terminal
awplus(config)# security-password lifetime 10
```

**Related commands**

security-password forced-change

security-password history

security-password min-lifetime-enforce

security-password minimum-categories

security-password minimum-length

security-password reject-expired-pwd

security-password warning

show running-config security-password

show security-password configuration

show security-password user

# security-password min-lifetime-enforce

**Overview**

Use this command to configure a minimum number of days before a password can be changed by a user. With this feature enabled, once a user sets the password, the user cannot change it again until the minimum lifetime has passed.

Use the **no** variant of this command to remove the minimum lifetime.

**Syntax**

```
security-password min-lifetime-enforce <0-1000>
no security-password min-lifetime-enforce
```

| Parameter | Description |
|---|---|
| *<0-1000>* | The minimum number of days before a password can be changed |

**Default**

By default, no minimum lifetime is enforced.

**Mode**

Global Configuration

**Usage notes**

The minimum lifetime is helpful in conjunction with a security policy that prevents people from re-using old passwords. For example, if you do not allow people to re-use any of their last 5 passwords, a person can bypass that restriction by changing their password 5 times in quick succession and then re-setting it to their previous password. The minimum lifetime prevents that by preventing people from changing their password in quick succession.

**Example**

To force users to wait at least 2 days between changing passwords, use the command:

```
awplus(config)# security-password min-lifetime-enforce 2
```

**Related commands**

security-password forced-change

security-password history

security-password lifetime

security-password minimum-categories

security-password minimum-length

security-password reject-expired-pwd

security-password warning

show running-config security-password

show security-password configuration

show security-password user

**Command changes**

Version 5.4.7-0.2: command added

# security-password minimum-categories

**Overview**

This command specifies the minimum number of categories that the password must contain in order to be considered valid. The password categories are:

- uppercase letters: A to Z
- lowercase letters: a to z
- digits: 0 to 9
- special symbols: all printable ASCII characters not included in the previous three categories. The question mark (?) cannot be used as it is reserved for help functionality.

Note that to ensure password security, the minimum number of categories should align with the lifetime selected, i.e. the fewer categories specified the shorter the lifetime specified.

**Syntax**

```
security-password minimum-categories <1-4>
```

| Parameter | Description |
|---|---|
| *<1-4>* | Number of categories the password must satisfy, in the range 1 to 4. |

**Default**

The default number of categories that the password must satisfy is 1.

**Mode**

Global Configuration

**Example**

To configure the required minimum number of character categories to be 3, use the command:

```
awplus# configure terminal
awplus(config)# security-password minimum-categories 3
```

**Related commands**

security-password forced-change

security-password history

security-password lifetime

security-password min-lifetime-enforce

security-password minimum-length

security-password reject-expired-pwd

security-password warning

show running-config security-password

show security-password configuration

show security-password user

# security-password minimum-length

**Overview** This command specifies the minimum allowable password length. This value is checked against when there is a password change or a user account is created.

**Syntax**

```
security-password minimum-length <1-23>
```

| Parameter | Description |
|---|---|
| *<1-23>* | Minimum password length in the range from 1 to 23. |

**Default** The default minimum password length is 1.

**Mode** Global Configuration

**Example** To configure the required minimum password length as 8, use the command:

```
awplus# configure terminal
awplus(config)# security-password minimum-length 8
```

**Related commands**

security-password forced-change

security-password history

security-password lifetime

security-password min-lifetime-enforce

security-password minimum-categories

security-password reject-expired-pwd

security-password warning

show running-config security-password

show security-password configuration

show security-password user

# security-password reject-expired-pwd

**Overview**

This command specifies whether or not a user is allowed to login with an expired password. Users with expired passwords are rejected at login if this functionality is enabled. Users then have to contact the Network Administrator to change their password.

***CAUTION:*** *Once all users' passwords are expired you are unable to login to the device again if the security-password reject-expired-pwd command has been executed. You will have to reboot the device with a default configuration file, or load an earlier software version that does not have the security password feature.*

*We recommend you never have the command line "security-password reject-expired-pwd" in a default config file.*

Note that when the reject-expired-pwd functionality is disabled and a user logs on with an expired password, if the forced-change feature is enabled with security-password forced-change command, a user may have to change the password during login depending on the password lifetime specified by the security-password lifetime command.

The **no** variant of the command disables this feature.

**Syntax**

```
security-password reject-expired-pwd
no security-password reject-expired-pwd
```

**Default**

The reject-expired-pwd feature is disabled by default.

**Mode**

Global Configuration

**Example**

To configure the system to reject users with an expired password, use the command:

```
awplus# configure terminal
awplus(config)# security-password reject-expired-pwd
```

**Related commands**

security-password forced-change

security-password history

security-password lifetime

security-password min-lifetime-enforce

security-password minimum-categories

security-password minimum-length

security-password warning

show running-config security-password

show security-password configuration

show security-password user

# security-password warning

**Overview**

This command specifies the number of days before the password expires that the user will receive a warning message specifying the remaining lifetime of the password.

Note that the warning period cannot be set unless the lifetime feature is enabled with the security-password lifetime command.

The **no** variant of the command disables this feature.

**Syntax**

```
security-password warning <0-1000>
no security-password warning
```

| Parameter | Description |
|---|---|
| *<0-1000>* | Warning period in the range from *0* to *1000* days. A value *0* disables the warning functionality and no warning message is displayed for expiring passwords. This is equivalent to the **no security-password warning** command. The warning period must be less than, or equal to, the password lifetime set with the security-password lifetime command. |

**Default**

The default warning period is `0`, which disables warning functionality.

**Mode**

Global Configuration

**Example**

To configure a warning period of three days, use the command:

```
awplus# configure terminal
awplus(config)# security-password warning 3
```

**Related commands**

security-password forced-change

security-password history

security-password lifetime

security-password min-lifetime-enforce

security-password minimum-categories

security-password minimum-length

security-password reject-expired-pwd

show running-config security-password

show security-password configuration

show security-password user

# service advanced-vty

**Overview** This command enables the advanced-vty help feature. This allows you to use TAB completion for commands. Where multiple options are possible, the help feature displays the possible options.

The **no service advanced-vty** command disables the advanced-vty help feature.

**Syntax**

```
service advanced-vty
no service advanced-vty
```

**Default** The advanced-vty help feature is enabled by default.

**Mode** Global Configuration

**Examples** To disable the advanced-vty help feature, use the command:

```
awplus# configure terminal
awplus(config)# no service advanced-vty
```

To re-enable the advanced-vty help feature after it has been disabled, use the following commands:

```
awplus# configure terminal
awplus(config)# service advanced-vty
```

# service password-encryption

**Overview**

Use this command to enable password encryption. This is enabled by default. When password encryption is enabled, the device displays passwords in the running config in encrypted form instead of in plain text.

Use the **no service password-encryption** command to stop the device from displaying newly-entered passwords in encrypted form. This does not change the display of existing passwords.

**Syntax**

```
service password-encryption
no service password-encryption
```

**Mode**

Global Configuration

**Example**

```
awplus# configure terminal
awplus(config)# service password-encryption
```

**Validation Commands**

show running-config

**Related commands**

enable password

# service telnet

**Overview**

Use this command to enable the telnet server. The server is enabled by default. Enabling the telnet server starts the device listening for incoming telnet sessions on the configured port.

The server listens on port 23, unless you have changed the port by using the privilege level command.

Use the **no** variant of this command to disable the telnet server. Disabling the telnet server will stop the device listening for new incoming telnet sessions. However, existing telnet sessions will still be active.

**Syntax**

```
service telnet [ip|ipv6]
no service telnet [ip|ipv6]
```

**Default**

The IPv4 and IPv6 telnet servers are enabled by default.

The configured telnet port is TCP port 23 by default.

**Mode**

Global Configuration

**Examples**

To enable both the IPv4 and IPv6 telnet servers, use the following commands:

```
awplus# configure terminal
awplus(config)# service telnet
```

To enable the IPv6 telnet server only, use the following commands:

```
awplus# configure terminal
awplus(config)# service telnet ipv6
```

To disable both the IPv4 and IPv6 telnet servers, use the following commands:

```
awplus# configure terminal
awplus(config)# no service telnet
```

To disable the IPv6 telnet server only, use the following commands:

```
awplus# configure terminal
awplus(config)# no service telnet ipv6
```

**Related commands**

clear line vty

show telnet

telnet server

# service terminal-length (deleted)

**Overview** This command has been deleted in Software Version 5.4.5-0.1 and later.

# show aaa local user locked

**Overview**

This command displays the current number of failed attempts, last failure time and location against each user account attempting to log into the device.

Note that once the lockout count has been manually cleared by another privileged account using the clear aaa local user lockout command or a locked account successfully logs into the system after waiting for the lockout time, this command will display nothing for that particular account.

**Syntax**

```
show aaa local user locked
```

**Mode**

User Exec and Privileged Exec

**Example**

To display the current failed attempts for local users, use the command:

```
awplus# show aaa local user locked
```

**Output**

Figure 4-1: Example output from the **show aaa local user locked** command

```
awplus# show aaa local user locked
Login           Failures Latest failure     From
bob                 3    05/23/14 16:21:37  ttyS0
manager             5    05/23/14 16:31:44  192.168.1.200
```

**Related commands**

aaa local authentication attempts lockout-time

aaa local authentication attempts max-fail

clear aaa local user lockout

# show privilege

**Overview** This command displays the current user privilege level, which can be any privilege level in the range <1-15>. Privilege levels <1-6> allow limited user access (all User Exec commands), privilege levels <7-14> allow restricted user access (all User Exec commands plus Privileged Exec show commands). Privilege level 15 gives full user access to all Privileged Exec commands.

**Syntax**

```
show privilege
```

**Mode** User Exec and Privileged Exec

**Usage notes** A user can have an intermediate CLI security level set with this command for privilege levels <7-14> to access all show commands in Privileged Exec mode and all commands in User Exec mode, but no configuration commands in Privileged Exec mode.

**Example** To show the current privilege level of the user, use the command:

```
awplus# show privilege
```

**Output** Figure 4-2: Example output from the **show privilege** command

```
awplus#show privilege
Current privilege level is 15
awplus#disable
awplus>show privilege
Current privilege level is 1
```

**Related commands** privilege level

# show security-password configuration

**Overview** This command displays the configuration settings for the various security password rules.

**Syntax**

```
show security-password configuration
```

**Mode** Privileged Exec

**Example** To display the current security-password rule configuration settings, use the command:

```
awplus# show security-password configuration
```

**Output** Figure 4-3: Example output from the **show security-password configuration** command

```
Security Password Configuration
Minimum password length ............................ 8
Minimum password character categories to match ..... 3
Number of previously used passwords to restrict..... 4
Password lifetime .................................. 30 day(s)
  Warning period before password expires ........... 3 day(s)
Reject expired password at login ................... Disabled
  Force changing expired password at login ......... Enabled
```

**Related commands**

security-password forced-change

security-password history

security-password lifetime

security-password min-lifetime-enforce

security-password minimum-categories

security-password minimum-length

security-password reject-expired-pwd

security-password warning

show security-password user

# show security-password user

**Overview** This command displays user account and password information for all users.

**Syntax**

```
show security-password user
```

**Mode** Privileged Exec

**Example** To display the system users' remaining lifetime or last password change, use the command:

```
awplus# show security-password user
```

**Output** Figure 4-4: Example output from the **show security-password** user command

```
User account and password information

UserName          Privilege Last-PWD-Change   Remaining-lifetime
-------------------------------------------------------------
manager           15          4625 day(s) ago   No Expiry
bob15             15             0 day(s) ago   30 days
ted7              7              0 day(s) ago   No Expiry
mike1             1              0 day(s) ago   No Expiry
```

**Related commands**

security-password forced-change

security-password history

security-password lifetime

security-password min-lifetime-enforce

security-password minimum-categories

security-password minimum-length

security-password reject-expired-pwd

security-password warning

show security-password configuration

# show telnet

**Overview** This command shows the Telnet server settings.

**Syntax** `show telnet`

**Mode** User Exec and Privileged Exec

**Example** To show the Telnet server settings, use the command:

```
awplus# show telnet
```

**Output** Figure 4-5: Example output from the **show telnet** command

```
Telnet Server Configuration
-----------------------------------------------------------
Telnet server                : Enabled
Protocol                     : IPv4,IPv6
Port                         : 23
```

**Related commands**

clear line vty

service telnet

show users

telnet server

# show users

**Overview** This command shows information about the users who are currently logged into the device.

**Syntax** `show users`

**Mode** User Exec and Privileged Exec

**Example** To show the users currently connected to the device, use the command:

```
awplus# show users
```

**Output** Figure 4-6: Example output from the **show users** command

```
Line     User            Host(s)  Idle      Location        Priv Idletime Timeout
con 0    manager         idle     00:00:00  ttyS0           15   10       N/A
vty 0    bob             idle     00:00:03  172.16.11.3     1    0        5
```

**Table 1:** Parameters in the output of the **show users** command

| Parameter | Description |
|---|---|
| `Line` | Console port user is connected to. |
| `User` | Login name of user. |
| `Host(s)` | Status of the host the user is connected to. |
| `Idle` | How long the host has been idle. |
| `Location` | URL location of user. |
| `Priv` | The privilege level in the range 1 to 15, with 15 being the highest. |
| `Idletime` | The time interval the device waits for user input from either a console or VTY connection. |
| `Timeout` | The time interval before a server is considered unreachable. |

# telnet

**Overview** Use this command to open a telnet session to a remote device.

**Syntax**

```
telnet {<hostname>|[ip] <ipv4-addr>|[ipv6] <ipv6-addr>}
[<port>]
```

**Syntax (VRF-lite)**

```
telnet [vrf <vrf-name>] {<hostname>|[ip] <ipv4-addr>|[ipv6]
<ipv6-addr>} [<port>]
```

| Parameter | Description |
|---|---|
| `vrf` | Apply this command to a VRF instance. |
| `<vrf-name>` | The name of the VRF instance. |
| `<hostname>` | The host name of the remote system. |
| `ip` | Keyword used to specify the IPv4 address or host name of a remote system. |
| `<ipv4-addr>` | An IPv4 address of the remote system. |
| `ipv6` | Keyword used to specify the IPv6 address of a remote system |
| `<ipv6-addr>` | Placeholder for an IPv6 address in the format `x:x::x:x`, for example, `2001:db8::8a2e:7334` |
| `<port>` | Specify a TCP port number (well known ports are in the range 1-1023, registered ports are 1024-49151, and private ports are 49152-65535). |

**Mode** User Exec and Privileged Exec

**Examples** To connect to TCP port 2602 on the device at 10.2.2.2, use the command:

```
awplus# telnet 10.2.2.2 2602
```

To connect to the telnet server `host.example`, use the command:

```
awplus# telnet host.example
```

To connect to the telnet server `host.example` on TCP port `100`, use the command:

```
awplus# telnet host.example 100
```

**Example (VRF-lite)** To open a telnet session to a remote host `192.168.0.1` associated with VRF instance `red`, use the command:

```
awplus# telnet vrf red ip 192.168.0.1
```

**Command changes** Version 5.4.6-2.1: VRF-lite support added.

# telnet server

**Overview** This command enables the telnet server on the specified TCP port. If the server is already enabled then it will be restarted on the new port. Changing the port number does not affect the port used by existing sessions.

**Syntax**

```
telnet server {<1-65535>|default}
```

| Parameter | Description |
|---|---|
| *<1-65535>* | The TCP port to listen on. |
| `default` | Use the default TCP port number 23. |

**Mode** Global Configuration

**Example** To enable the telnet server on TCP port 2323, use the following commands:

```
awplus# configure terminal
awplus(config)# telnet server 2323
```

**Related commands** show telnet

# terminal length

**Overview**

Use the **terminal length** command to specify the number of rows of output that the device will display before pausing, for the currently-active terminal only.

Use the **terminal no length** command to remove the length specified by this command. The default length will apply unless you have changed the length for some or all lines by using the length (asyn) command.

**Syntax**

```
terminal length <length>
terminal no length [<length>]
```

| Parameter | Description |
|---|---|
| *<length>* | <0-512> Number of rows that the device will display on the currently-active terminal before pausing. |

**Mode**

User Exec and Privileged Exec

**Examples**

The following example sets the number of lines to 15:

```
awplus# terminal length 15
```

The following example removes terminal length set previously:

```
awplus# terminal no length
```

**Related commands**

terminal resize

length (asyn)

# terminal resize

**Overview** Use this command to automatically adjust the number of rows of output on the console, which the device will display before pausing, to the number of rows configured on the user's terminal.

**Syntax**

```
terminal resize
```

**Mode** User Exec and Privileged Exec

**Usage notes** When the user's terminal size is changed, then a remote session via SSH or TELNET adjusts the terminal size automatically. However, this cannot normally be done automatically for a serial or console port. This command automatically adjusts the terminal size for a serial or console port.

**Examples** The following example automatically adjusts the number of rows shown on the console:

```
awplus# terminal resize
```

**Related commands** length (asyn)

terminal length

# username

**Overview** This command creates or modifies a user to assign a privilege level and a password.

***NOTE:*** *The default username privilege level of 1 is not shown in running-config output. Any username privilege level that has been modified from the default is shown.*

**Syntax**

```
username <name> privilege <1-15> [password [8] <password>]
username <name> password [8] <password>
no username <name>
```

| Parameter | Description | |
|---|---|---|
| *<name>* | The login name for the user. Do not use punctuation marks such as single quotes (' '), double quotes (" "), or colons ( : ) with the user login name. | |
| `privilege` | The user's privilege level. Use the privilege levels to set the access rights for each user. | |
| | *<1-15>* | A privilege level: either 1-14 (limited access) or 15 (full access). A user with privilege level 1-14 can only access higher privilege levels if an enable password has been configured for the level the user tries to access and the user enters that password.<br>A user at privilege level 1 can access the majority of show commands. A user at privilege level 7 can access the majority of show commands including platform show commands. Privilege Level 15 (to access the Privileged Exec command mode) is required to access configuration commands as well as show commands in Privileged Exec. |
| `password` | A password that the user must enter when logging in. | |
| | 8 | Specifies that you are entering a password as a string that has already been encrypted, instead of entering a plain-text password. The running-config displays the new password as an encrypted string even if password encryption is turned off.<br>Note that the user enters the plain-text version of the password when logging in. |
| | *<password>* | The user's password. The password can be up to 32 characters in length and include characters from up to four categories. The password categories are:<br>• uppercase letters: A to Z<br>• lowercase letters: a to z<br>• digits: 0 to 9<br>• special symbols: all printable ASCII characters not included in the previous three categories. The question mark ? cannot be used as it is reserved for help functionality. |

**Mode** Global Configuration

**Default** The privilege level is 1 by default. Note the default is not shown in running-config output.

**Usage notes**

An intermediate CLI security level (privilege level 7 to privilege level 14) allows a CLI user access to the majority of show commands, including the platform show commands that are available at privilege level 1 to privilege level 6. Note that some show commands, such as **show running-configuration** and **show startup-configuration**, are only available at privilege level 15.

**Examples**

To create the user "bob" with a privilege level of 15, for all show commands including show running-configuration and show startup-configuration and to access configuration commands in Privileged Exec command mode, and the password "bobs_secret", use the commands:

```
awplus# configure terminal
awplus(config)# username bob privilege 15 password bobs_secret
```

To create a user "junior_admin" with a privilege level of 7, which will have intermediate CLI security level access for most show commands, and the password "show_only", use the commands:

```
awplus# configure terminal
awplus(config)# username junior_admin privilege 7 password
show_only
```

**Related commands**

enable password

security-password minimum-categories

security-password minimum-length

# 5 Subscription Licensing Commands

## Introduction

**Overview**

This chapter provides an alphabetical reference for each of the Subscription Licensing commands.

Subscription Licensing enables you to use the advanced threat protection features on your UTM firewall. To see the advanced threat protection subscriptions for your device, see the Datasheet.

For step-by-step instructions about how to license AlliedWare Plus devices, see the Licensing Feature Overview and Configuration Guide.

**Command List**


- "license update file" on page 240
- "license update online" on page 241
- "show license external" on page 243

# license update file

**Overview**

Use this command to load a license, after you have manually copied the license file onto the device.

Only use this command if you cannot directly access the Allied Telesis Download Center from this device. Otherwise, use the command license update online instead.

**Syntax**

```
license update file <filename>
```

| Parameter | Description |
|---|---|
| *<filename>* | Name and path of the license file on the device. |

**Mode**

Privileged Exec

**Usage notes**

You can download subscription licenses from the Allied Telesis Download Center, in order to copy them onto the device.

**Examples**

To load a license onto a device from a file called “license_file.bin” that is stored at the top level of Flash memory, use the following command:

```
awplus# license update file license_file.bin
```

**Related commands**

license update online

show license external

**Command changes**

Version 5.4.6-2.1: usage changed by introduction of license update online

# license update online

**Overview** Use this command to add or update subscription licenses from the Allied Telesis Download Center, to subscribe to features such as advanced threat management.

When you enter this command, the device will:

1) Connect to the Download Center

2) Check if new or changed licenses are available for the device, keyed to the device's serial number

3) For each such license it finds, download and install the license.

**Syntax** `license update online`

**Default** AlliedWare Plus devices do not automatically connect to the Download Center and check whether licenses are available. They only check when you run the **license update online** command.

**Mode** User Exec/Privileged Exec

**Usage notes**

**Firewall rule**

AR-series firewalls block all traffic by default, so you need to configure a firewall rule to allow the licensing connection attempt to pass through the firewall. The following figure shows a recommended example configuration, when the WAN interface to the Internet is configured as a ppp0 interface:

```
zone public
 network wan
  ip subnet 0.0.0.0/0 interface ppp0
  host ppp0
   ip address dynamic interface ppp0

firewall
 rule 10 permit dns from public.wan.ppp0 to public.wan
 rule 20 permit https from public.wan.ppp0 to public.wan
 protect
```

This rule permits DNS and HTTPS packets to any destination IP address, if:

- the source IP address of the packets is the IP address of the ppp0 interface, and
- the packets are egressing the firewall through interface ppp0.

DNS packets are permitted so that the device can look up the address of the Download Center. HTTPS packets are permitted so the secure communication session with the Download Center can proceed.

The rule uses a subnet of 0.0.0.0/0 to match on any destination IP address.

The "from" part of the rule uses "public.wan.ppp0" because the firewall itself is originating the connection to the Download Center, rather than allowing traffic to

flow through it, as is the case for most firewall rules. Hence, the traffic that is involved in the connection to the Download Center originates from the IP address of the PPP interface.

**Verifying the update**

The update process normally takes approximately 5 seconds.

If the console does not respond for 10 or more seconds after typing the command, a network, routing or firewall configuration error is probably preventing the connection from establishing. If this happens, you can abort the command by pressing Ctrl-C, or wait for the command to time out after 30 seconds.

If the connection to the Download Centers fails and times out, an error message will be generated on the CLI to indicate the problem. If you abort the command, no error message is displayed.

If the update is successful, the device will produce log messages to say which features have had their licensing state updated (activated, deactivated, number of items changed, or expiry date changed). If the command completes successfully but there are no licenses available for the device, or no change in the licenses already on the device, no log messages will be produced.

You should also use the show license external command to confirm which licenses are active on the device after the update has been applied.

**Example**

To add a subscription license, use the command:

```
awplus# license update online
```

**Related commands**

show license external

**Command changes**

Version 5.4.6-2.1: command added

# show license external

**Overview** Use this command to show information about subscription (external) licenses.

**Syntax** `show license external`

**Mode** Privileged Exec

**Examples** To show information about what subscription features the device is licensed for, use the following command:

```
awplus#show license external
```

**Output** Figure 5-1: Example output from **show license external**

```
awplus#show license external
Licensed features:

Application Control (Procera)
Start date                    : 24-Feb-2015 12:00AM
Expiry date                   : 24-Feb-2016 11:59PM

Web Control (Digital Arts)
Start date                    : 24-Feb-2015 12:00AM
Expiry date                   : 24-Feb-2016 11:59PM
```

**Related commands** license update online

# 6 Update Manager Commands

## Introduction

**Overview** This chapter provides an alphabetical reference of commands used to update a resource. For more information, see the Update Manager Feature Overview and Configuration_Guide.

**Command List**


- "show resource" on page 245
- "update now" on page 247
- "update webgui now" on page 249

# show resource

**Overview** Use this command to show information about the resources of features that have been enabled.

**Syntax** `show resource [<resource-name>]`

| Parameter | Description |
|---|---|
| *<resource-name>* | Specific resource to show |

**Mode** Privileged Exec

**Examples** To show information about the resources of features that have been enabled, use the following command:

```
awplus# show resource
```

**Output** Figure 6-1: Example output for **show resource**

```
awplus#show resource
-------------------------------------------------------------------------------
Resource Name          Status      Version    Interval   Last Download
                                                         Next Download Check
-------------------------------------------------------------------------------
iprep_et_rules         Checking    1.1        4          Wed Dec 31 23:59:00 2020
                                              hours      Thu Jan 1 01:00:00 2020
```

The parameters in the example output are explained in the following table.

| Parameter | Description |
|---|---|
| Resource Name | Name of the updatable resource |
| Status | Resource status. There are five types of status: Sleeping, Checking, Starting, Downloading, Stopping. |
| Version | Current version of the resource |
| Interval | Configured update check interval for the resource |
| Last Download | Time stamp of last resource downloaded |
| Next Download Check | Time stamp of next download check for the resource |

**Related commands**

update-interval (antivirus)

update-interval (dpi)

update-interval (IP Reputation)

update-interval (malware)

update now

update webgui now

**Command changes**

Version 5.4.9-2.1: command added to SBx908 GEN2

# update now

**Overview** Use this command to immediately perform a resource update check and update the specified resource if a newer version is available.

**Syntax**

```
update {<resource-name>|all} now
```

| Parameter | Description |
|---|---|
| `<resource-name>` | Specific resource to update. You will get an error message if the resource does not exist. |
| `all` | Update all resources |

**Mode** Privileged Exec

**Usage notes** The default update interval for a resource is 1 hour. Users can initiate an immediate update check for a resource at any time without affecting any configured update check schedule. The Update Manager will perform an update check for a resource when triggered to do so. The Update Manager will request the current version number of the resource from the Update Server, then compare it with the current local version. If they are different, the Update Manager will initiate an update of the local resource.

Note that if a feature is disabled, regular and manual update checks for its resources are also disabled.

Also note that an update check for a resource will not proceed if an update of that resource is already in progress.

The Update Manager will retry upon failure to download a resource file because of DNS resolution error, bad checksum and so on.

**Examples** To do an update check and update all available resources, use the following command:

```
awplus# update all now
```

To do an update check and update the device's GUI, use the following command:

```
awplus# update webgui now
```

**Related commands**

show resource

update-interval (antivirus)

update-interval (dpi)

update-interval (IP Reputation)

update-interval (malware)

update webgui now

**Command changes** Version 5.4.9-2.1: command added to SBx908 GEN2

# update webgui now

**Overview** Use this command to check whether you have the latest version of the device's GUI and update it if a newer version is available.

**Syntax**

```
update webgui now
```

**Mode** Privileged Exec

**Usage notes** If you have previously used the **copy** command to copy GUI files onto your device, these files need to be deleted before running **update webgui now**. To delete all GUI files, use the command:

```
awplus# del *gui_*.tar.gz
```

**Examples** To check for GUI updates, use the following command:

```
awplus# update webgui now
```

**Related commands** show resource

**Command changes** Version 5.4.9-2.1: command added to SBx908 GEN2

# 7 Web Redirect Commands

## Introduction

**Overview**

This chapter provides an alphabetical reference of commands used to configure Web Redirect.

The Web Redirect feature monitors HTTP requests passing through a device, intercepts the request, and replies with an HTTP Redirect message instructing the client to go to a specified URL.

For more information, see the Web Redirect Feature Overview and Configuration Guide.

**Command List**


- "browser-only (web-redirect)" on page 251
- "enable (web-redirect)" on page 252
- "exclude ip" on page 253
- "exclude mac" on page 254
- "idle-time (web-redirect)" on page 255
- "repeat-time (web-redirect)" on page 257
- "server-url (web-redirect)" on page 258
- "show running-config web-redirect" on page 259
- "show web-redirect" on page 260
- "web-redirect" on page 261

# browser-only (web-redirect)

**Overview**

Use this command to redirect only the HTTP requests sent by a web browser.

Use the **no** variant of this command to redirect all HTTP requests.

**Syntax**

```
browser-only
no browser-only
```

**Default**

Disabled.

**Mode**

Web Redirect Configuration

**Usage notes**

Hosts may be using HTTP to request automatic software updates but it may be inappropriate for these requests to be redirected.

The **browser-only** option identifies browser requests by the "Mozilla" string in the User-Agent field of the HTTP request. If the string is not present the request is not redirected. All common browsers include "Mozilla" in their User-Agent field.

**Example**

To redirect only web browser HTTP clients, use the following commands:

```
awplus# configure terminal
awplus(config)# web-redirect
awplus(config-web-redirect)# browser-only
```

To redirect all HTTP clients, use the following commands:

```
awplus# configure terminal
awplus(config)# web-redirect
awplus(config-web-redirect)# no browser-only
```

**Related commands**

web-redirect

**Command changes**

Version 5.4.8-1.1: command added

# enable (web-redirect)

**Overview**

Use this command to enable web redirection on a device.

Use the **no** variant of this command to disable web redirection without losing any existing web redirection configuration.

**Syntax**

```
enable
no enable
```

**Default**

Disabled.

**Mode**

Web Redirect Configuration

**Usage notes**

The web redirect feature monitors HTTP requests passing through a device, intercepts the request, and replies with an HTTP Redirect message instructing the client to go to a specified URL.

**Example**

To enable web redirection, use the following commands:

```
awplus# configure terminal
awplus(config)# web-redirect
awplus(config-web-redirect)# enable
```

To disable web redirection, use the following commands:

```
awplus# configure terminal
awplus(config)# web-redirect
awplus(config-web-redirect)# no enable
```

**Related commands**

web-redirect

**Command changes**

Version 5.4.8-1.1: command added

# exclude ip

**Overview**

Use this command to exclude an IP address (or subnet) from being web redirected.

Use the **no** variant of this command to remove an excluded IP address (or subnet) from web redirection.

**Syntax**

```
exclude ip {<ip-address>|<ip-subnet>}
no exclude ip {<ip-address>|<ip-subnet>}
```

| Parameter | Description |
|---|---|
| *<ip-address>* | Exclude a specific client IP address from web redirection |
| *<ip-subnet>* | Exclude a client subnet from web redirection |

**Mode**

Web Redirect Configuration

**Example**

To exclude the subnet 192.0.2.0/24 from being redirected, use the commands:

```
awplus# configure terminal
awplus(config)# web-redirect
awplus(config-web-redirect)# exclude ip 192.0.2.0/24
```

To remove the subnet 192.0.2.0/24 from exclusion, use the commands:

```
awplus# configure terminal
awplus(config)# web-redirect
awplus(config-web-redirect)# no exclude ip 192.0.2.0/24
```

**Related commands**

web-redirect

**Command changes**

Version 5.4.8-1.1: command added

# exclude mac

**Overview** Use this command to exclude an entire group of MAC addresses from being redirected.

Use the **no** variant of this command to remove a MAC address exclusion.

**Syntax**

```
exclude mac <oui>
no exclude mac <oui>
```

| Parameter | Description |
|---|---|
| *<oui>* | The OUI (Organizational Unique Identifier) for the MAC address to be excluded. This is the vendor component of the MAC address, the first 24 bits that uniquely identify the vendor. |

**Mode** Web Redirect Configuration

**Example** To exclude Allied Telesis devices from being redirected, use the commands:

```
awplus# configure terminal
awplus(config)# web-redirect
awplus(config-web-redirect)# exclude mac 00:00:cd
```

To remove the exclusion of Allied Telesis devices, use the commands:

```
awplus# configure terminal
awplus(config)# web-redirect
awplus(config-web-redirect)# no exclude mac 00:00:cd
```

**Related commands** web-redirect

**Command changes** Version 5.4.8-1.1: command added

# idle-time (web-redirect)

**Overview**

Use this command to set the time the client must have been idle before it can be redirected once the repeat-time has expired.

This command improves your web browsing experience. For example, if you were busy browsing a web site and loading new content, then it is undesirable to be immediately redirected after the expiry of the repeat time interval. To ensure an ideal user experience, it is better to wait for an additional period of time to ensure current web site content is fully downloaded, and for the browser to have been idle before being redirected.

Use the **no** variant of this command to revert to the default value of 0.

**Syntax**

```
idle-time <0-86400>
no idle-time
```

| Parameter | Description |
|---|---|
| *<0-86400>* | Idle time after repeat time before redirecting a client, in seconds. |

**Default**

0 seconds.

**Mode**

Web Redirect Configuration

**Usage notes**

Sets the interval, following the repeat time, for which a client must be idle before it will be redirected again. This interval makes it likely that it will be a web page request that is redirected, rather than some sub-component of the page. This ensures the page that the user is being redirected to is displayed as a full page, rather than a sub-component of the current page being browsed to.

***NOTE:*** *The time when the client is idle can include the time leading up to the expiry of the* ***repeat-time****. So, if the idle time was 60sec and the client had been idle for the 60sec prior to the repeat-time expiring, the client could be redirected straight away. Or, if it had been idle for 30sec prior to the repeat-time expiring, it would need to be idle for a further 30sec afterwards, before being redirected.*

**Example**

To configure the time after repeat time before redirecting a client to 1 hour (3600 seconds), use the commands:

```
awplus# configure terminal
awplus(config)# web-redirect
awplus(config-web-redirect)# idle-time 3600
```

To restore the default idle time, which is 0 seconds, use the commands:

```
awplus# configure terminal
awplus(config)# web-redirect
awplus(config-web-redirect)# no idle-time
```

**Related commands**

web-redirect

repeat-time (web-redirect)

**Command changes**

Version 5.4.8-1.1: command added

# repeat-time (web-redirect)

**Overview**

Use this command to configure the interval time between redirects for a client.

Use the **no** variant of this command to revert to the default interval time.

**Syntax**

```
repeat-time <1-31536000>
no repeat-time
```

| Parameter | Description |
|---|---|
| *<1-31536000>* | The interval between redirects for a client in seconds. |

**Default**

0 seconds.

**Mode**

Web Redirect Configuration

**Usage notes**

Sets the interval (in seconds) between redirects for a client. After the specified interval the client will be ***eligible*** to be redirected again. If no "repeat-time" is specified every client request will be eligible for a redirect immediately. Whether or not an eligible client is immediately redirected at the expiry of the repeat time depends on the **idle-time**.

**Example**

To set the interval time between redirects to every hour (3600 seconds), use the commands:

```
awplus# configure terminal
awplus(config)# web-redirect
awplus(config-web-redirect)# repeat-time 3600
```

To restore the default repeat time interval time between re-directs (0 seconds), use the commands:

```
awplus# configure terminal
awplus(config)# web-redirect
awplus(config-web-redirect)# no repeat-time
```

**Related commands**

idle-time (web-redirect)

web-redirect

**Command changes**

Version 5.4.8-1.1: command added

# server-url (web-redirect)

**Overview**

Use this command to configure the URL of the server to which the HTTP connection will be redirected.

Use the **no** variant of this command to remove the configured server redirect URL.

**Syntax**

```
server-url <url>
no server-url
```

| Parameter | Description |
|---|---|
| *<url>* | URL (host name or dotted IP notation) |

**Mode**

Web Redirect Configuration

**Example**

To redirect the HTTP connection to http://redirectexample.com, use the commands:

```
awplus# configure terminal
awplus(config)# web-redirect
awplus(config-web-redirect)# server-url
http://redirectexample.com
```

To unset the server redirect URL, use the commands:

```
awplus# configure terminal
awplus(config)# web-redirect
awplus(config-web-redirect)# no server-url
```

**Related commands**

web-redirect

**Command changes**

Version 5.4.8-1.1: command added

# show running-config web-redirect

**Overview** Use this command to display the running configuration for web redirection.

**Syntax**

```
show running-config web-redirect
```

**Mode** Privileged Exec

**Example** To display the running configuration for web redirection, use the following commands:

```
awplus# show running-config web-redirect
```

**Output** Figure 7-1: Example output from **show running-config web-redirect**

```
awplus#show running-config web-redirect
web-redirect
 server-url http://redirectexample.com
 repeat-time 3600
 idle-time 360
 enable!
```

**Related commands** web-redirect

**Command changes** Version 5.4.8-1.1: command added.

# show web-redirect

**Overview** Use this command to display information about the status of web redirect, the total number of redirected hosts being tracked, and information about when each host (by IP) was last redirected and when it will next be eligible for redirection.

**Syntax** `show web-redirect`

**Mode** Privileged Exec

**Example** To show the state of web redirection, use the following command:

```
awplus# show web-redirect
```

**Output** Figure 7-2: Example output from **show web-redirect**

```
awplus#show web-redirect
Status:     Enabled
Total number of redirected clients: 5
Clients:
Address                    Last Redirection           Next redirection after
-----------------------------------------------------------------------------
192.0.2.0.2                Tue 26 Jun 2018 11:03:50   Wed 27 Jun 2018 11:03:50
192.0.2.0.17               Tue 26 Jun 2018 10:51:11   Wed 27 Jun 2018 10:51:11
192.0.2.0.31               Tue 26 Jun 2018 05:33:42   Wed 27 Jun 2018 05:33:42
2001:db8::2:121            Tue 25 Jun 2018 17:48:06   Wed 26 Jun 2018
17:48:062001:db8::1:ab6d   Tue 26 Jun 2018 01:18:39   Wed 27 Jun 2018 01:18:39
```

**Related commands** web-redirect

**Command changes** Version 5.4.8-1.1: command added

# web-redirect

**Overview**

Use this command to enter the web redirection mode so you can configure web redirection.

Use the **no** variant of this command to remove all web redirection configuration.

**Syntax**

```
web-redirect
no web-redirect
```

**Default**

Disabled.

**Mode**

Global Configuration

**Example**

To configure the web redirection settings, use the commands:

```
awplus# configure terminal
awplus(config)# web-redirect
awplus(config-web-redirect)#
```

To remove all web redirection configuration, use the commands:

```
awplus# configure terminal
awplus(config)# no web-redirect
```

**Related commands**

enable (web-redirect)

repeat-time (web-redirect))

idle-time (web-redirect))

server-url (web-redirect)

browser-only (web-redirect)

show running-config web-redirect

exclude ip

exclude mac

show web-redirect

**Command changes**

Version 5.4.8-1.1: command added

# 8 System Configuration and Monitoring Commands

## Introduction

**Overview** This chapter provides an alphabetical reference of commands for configuring and monitoring the system.

**Command List**


- "banner exec" on page 264
- "banner login (system)" on page 266
- "banner motd" on page 268
- "clock set" on page 270
- "clock summer-time date" on page 271
- "clock summer-time recurring" on page 273
- "clock timezone" on page 275
- "debug core-file" on page 276
- "hostname" on page 277
- "max-fib-routes" on page 279
- "max-static-routes" on page 281
- "no debug all" on page 282
- "reboot" on page 284
- "receive-packet-scheduler" on page 285
- "reload" on page 287
- "show clock" on page 288
- "show cpu" on page 290
- "show cpu history" on page 293
- "show debugging" on page 295
- "show interface memory" on page 296

- "show memory" on page 298
- "show memory allocations" on page 300
- "show memory history" on page 302
- "show memory pools" on page 303
- "show memory shared" on page 304
- "show process" on page 305
- "show reboot history" on page 307
- "show router-id" on page 308
- "show system" on page 309
- "show system environment" on page 310
- "show system environment counters" on page 311
- "show system interrupts" on page 313
- "show system mac" on page 314
- "show system pci device" on page 315
- "show system pci tree" on page 316
- "show system serialnumber" on page 317
- "show tech-support" on page 318
- "speed (asyn)" on page 320
- "terminal monitor" on page 322
- "undebug all" on page 323

# banner exec

**Overview** This command configures the User Exec mode banner that is displayed on the console after you login. The **banner exec default** command restores the User Exec banner to the default banner. Use the **no banner exec** command to disable the User Exec banner and remove the default User Exec banner.

**Syntax**

```
banner exec <banner-text>
banner exec default
no banner exec
```

**Default** By default, the AlliedWare Plus™ version and build date is displayed at console login, such as:

```
AlliedWare Plus (TM) 5.5.0 04/05/20 12:00:00
```

**Mode** Global Configuration

**Examples** To configure a User Exec mode banner after login (in this example, to tell people to use the **enable** command to move to Privileged Exec mode), enter the following commands:

```
awplus#configure terminal
awplus(config)#banner exec Use enable to move to Priv Exec mode
awplus(config)#exit
awplus#exit

awplus login: manager
Password:

Use enable to move to Priv Exec mode

awplus>
```

To restore the default User Exec mode banner after login, enter the following commands:

```
awplus#configure terminal
awplus(config)#banner exec default
awplus(config)#exit
awplus#exit

awplus login: manager
Password:

AlliedWare Plus (TM) 5.5.0 04/05/20 12:00:00

awplus>
```

To remove the User Exec mode banner after login, enter the following commands:

```
awplus#configure terminal
awplus(config)#no banner exec
awplus(config)#exit
awplus#exit

awplus login: manager
Password:

awplus>
```

**Related commands**

banner login (system)

banner motd

# banner login (system)

**Overview** This command configures the login banner that is displayed on the console when you login. The login banner is displayed on all connected terminals. The login banner is displayed after the MOTD (Message-of-the-Day) banner and before the login username and password prompts.

Use the **no banner login** command to disable the login banner.

**Syntax**

```
banner login
no banner login
```

**Default** By default, no login banner is displayed at console login.

**Mode** Global Configuration

**Examples** To configure a login banner of "Authorised users only" to be displayed when you login, enter the following commands:

```
awplus#configure terminal
awplus(config)#banner login
Type CNTL/D to finish.

Authorised users only

awplus(config)#exit
awplus#exit

Authorised users only

awplus login: manager
Password:

AlliedWare Plus (TM) 5.5.0 04/05/20 12:00:00

awplus>
```

To remove the login banner, enter the following commands:

```
awplus#configure terminal
awplus(config)#no banner login
awplus(config)#exit
awplus#exit

awplus login: manager
Password:

AlliedWare Plus (TM) 5.5.0 04/05/20 12:00:00

awplus>
```

**Related commands**

banner exec

banner motd

# banner motd

**Overview** Use this command to create or edit the text MotD (Message-of-the-Day) banner displayed before login. The MotD banner is displayed on all connected terminals. The MotD banner is useful for sending messages that affect all network users, for example, any imminent system shutdowns.

Use the **no** variant of this command to delete the MotD banner.

**Syntax**

```
banner motd <motd-text>
no banner motd
```

| Parameter | Description |
|---|---|
| *<motd-text>* | The text to appear in the Message of the Day banner. |

**Default** By default, the device displays the AlliedWare Plus™ OS version and build date when you login.

**Mode** Global Configuration

**Examples** To configure a MotD banner of "System shutdown at 6pm today" to be displayed when you log in, enter the following commands:

```
awplus>enable
awplus#configure terminal
Enter configuration commands, one per line.  End with CNTL/Z.
awplus(config)#banner motd System shutdown at 6pm today
awplus(config)#exit
awplus#exit

System shutdown at 6pm today
awplus login: manager
Password:

AlliedWare Plus (TM) 5.5.0 04/05/20 12:00:00

awplus>
```

To delete the login banner, enter the following commands:

```
awplus>enable
awplus#configure terminal
Enter configuration commands, one per line.  End with CNTL/Z.
awplus(config)#no banner motd
awplus(config)#exit
awplus#exit

awplus login: manager
Password:

AlliedWare Plus (TM) 5.5.0 04/05/20 12:00:00

awplus>
```

**Related commands**

banner exec

banner login (system)

# clock set

**Overview** This command sets the time and date for the system clock.

**Syntax** `clock set <hh:mm:ss> <day> <month> <year>`

| Parameter | Description |
|---|---|
| *<hh:mm:ss>* | Local time in 24-hour format |
| *<day>* | Day of the current month, from 1 to 31 |
| *<month>* | The first three letters of the current month |
| *<year>* | Current year, from 2000 to 2035 |

**Mode** Privileged Exec

**Usage notes** Configure the timezone before setting the local time. Otherwise, when you change the timezone, the device applies the new offset to the local time.

***NOTE:*** *If Network Time Protocol (NTP) is enabled, then you cannot change the time or date using this command. NTP maintains the clock automatically using an external time source. If you wish to manually alter the time or date, you must first disable NTP.*

**Example** To set the time and date on your system to 2pm on the 2nd of October 2016, use the command:

```
awplus# clock set 14:00:00 2 oct 2016
```

**Related commands** clock timezone

# clock summer-time date

**Overview** This command defines the start and end of summertime for a specific year only, and specifies summertime's offset value to Standard Time for that year.

The **no** variant of this command removes the device's summertime setting. This clears both specific summertime dates and recurring dates (set with the clock summer-time recurring command).

By default, the device has no summertime definitions set.

**Syntax**

```
clock summer-time <timezone-name> date <start-day>
<start-month> <start-year> <start-time> <end-day> <end-month>
<end-year> <end-time> <1-180>
```

```
no clock summer-time
```

| Parameter | Description |
|---|---|
| *<timezone-name>* | A description of the summertime zone, up to 6 characters long. |
| date | Specifies that this is a date-based summertime setting for just the specified year. |
| *<start-day>* | Day that the summertime starts, from 1 to 31. |
| *<start-month>* | First three letters of the name of the month that the summertime starts. |
| *<start-year>* | Year that summertime starts, from 2000 to 2035. |
| *<start-time>* | Time of the day that summertime starts, in the 24-hour time format HH:MM. |
| *<end-day>* | Day that summertime ends, from 1 to 31. |
| *<end-month>* | First three letters of the name of the month that the summertime ends. |
| *<end-year>* | Year that summertime ends, from 2000 to 2035. |
| *<end-time>* | Time of the day that summertime ends, in the 24-hour time format HH:MM. |
| *<1-180>* | The offset in minutes. |

**Mode** Global Configuration

**Examples** To set a summertime definition for New Zealand using NZST (UTC+12:00) as the standard time, and NZDT (UTC+13:00) as summertime, with the summertime set to begin on the 25th of September 2016 and end on the 2nd of April 2017:

```
awplus(config)# clock summer-time NZDT date 25 sep 2:00 2016 2
apr 2:00 2017 60
```

To remove any summertime settings on the system, use the command:

```
awplus(config)# no clock summer-time
```

**Related commands**

clock summer-time recurring

clock timezone

# clock summer-time recurring

**Overview** This command defines the start and end of summertime for every year, and specifies summertime's offset value to Standard Time.

The **no** variant of this command removes the device's summertime setting. This clears both specific summertime dates (set with the clock summer-time date command) and recurring dates.

By default, the device has no summertime definitions set.

**Syntax**

```
clock summer-time <timezone-name> recurring <start-week>
<start-day> <start-month> <start-time> <end-week> <end-day>
<end-month> <end-time> <1-180>
```

```
no clock summer-time
```

| Parameter | Description |
|---|---|
| *<timezone-name>* | A description of the summertime zone, up to 6 characters long. |
| `recurring` | Specifies that this summertime setting applies every year from now on. |
| *<start-week>* | Week of the month when summertime starts, in the range 1-5. The value 5 indicates the last week that has the specified day in it for the specified month. For example, to start summertime on the last Sunday of the month, enter 5 for *<start-week>* and sun for *<start-day>*. |
| *<start-day>* | Day of the week when summertime starts. Valid values are mon, tue, wed, thu, fri, sat or sun. |
| *<start-month>* | First three letters of the name of the month that summertime starts. |
| *<start-time>* | Time of the day that summertime starts, in the 24-hour time format HH:MM. |
| *<end-week>* | Week of the month when summertime ends, in the range 1-5. The value 5 indicates the last week that has the specified day in it for the specified month. For example, to end summertime on the last Sunday of the month, enter 5 for *<end-week>* and sun for *<end-day>*. |
| *<end-day>* | Day of the week when summertime ends. Valid values are mon, tue, wed, thu, fri, sat or sun. |
| *<end-month>* | First three letters of the name of the month that summertime ends. |
| *<end-time>* | Time of the day that summertime ends, in the 24-hour time format HH:MM. |
| *<1-180>* | The offset in minutes. |

**Mode** Global Configuration

**Examples** To set a summertime definition for New Zealand using NZST (UTC+12:00) as the standard time, and NZDT (UTC+13:00) as summertime, with summertime set to start on the last Sunday in September, and end on the 1st Sunday in April, use the command:

```
awplus(config)# clock summer-time NZDT recurring 5 sun sep 2:00
1 sun apr 2:00 60
```

To remove any summertime settings on the system, use the command:

```
awplus(config)# no clock summer-time
```

**Related commands** clock summer-time date

clock timezone

# clock timezone

**Overview**

This command defines the device's clock timezone. The timezone is set as a offset to the UTC.

The **no** variant of this command resets the system time to UTC.

By default, the system time is set to UTC.

**Syntax**

```
clock timezone <timezone-name> {minus|plus}
[<0-13>|<0-12>:<00-59>]
```

```
no clock timezone
```

| Parameter | Description |
|---|---|
| *<timezone-name>* | A description of the timezone, up to 6 characters long. |
| minusorplus | The direction of offset from UTC. The **minus** option indicates that the timezone is behind UTC. The **plus** option indicates that the timezone is ahead of UTC. |
| *<0-13>* | The offset in hours or from UTC. |
| *<0-12>:<00-59>* | The offset in hours or from UTC. |

**Mode**

Global Configuration

**Usage notes**

Configure the timezone before setting the local time. Otherwise, when you change the timezone, the device applies the new offset to the local time.

**Examples**

To set the timezone to New Zealand Standard Time with an offset from UTC of +12 hours, use the command:

```
awplus(config)# clock timezone NZST plus 12
```

To set the timezone to Indian Standard Time with an offset from UTC of +5:30 hours, use the command:

```
awplus(config)# clock timezone IST plus 5:30
```

To set the timezone back to UTC with no offsets, use the command:

```
awplus(config)# no clock timezone
```

**Related commands**

clock set

clock summer-time date

clock summer-time recurring

# debug core-file

**Overview**

Use this command to enable the generation of crash core files.

Use the **no** variant of this command to disable the generation of crash core files.

**Syntax**

```
debug core-file
no debug core-file
```

**Default**

Enabled.

**Mode**

Global Configuration

**Usage notes**

Core files may contain raw memory content. This may not be acceptable in a security certified network. Use the **no debug core-file** command to prevent such core files from being generated.

**Example**

To prevent the generation of core files, use the commands:

```
awplus# configure terminal
awplus(config)# no debug core-file
```

**Related commands**

show system

**Command changes**

Version 5.4.9-1.0: command added

# hostname

**Overview** This command sets the name applied to the device as shown at the prompt. The hostname is:

- displayed in the output of the show system command
- displayed in the CLI prompt so you know which device you are configuring
- stored in the MIB object sysName

Use the **no** variant of this command to revert the hostname setting to its default. For devices that are not part of an AMF network, the default is "awplus".

**Syntax**

```
hostname <hostname>
no hostname [<hostname>]
```

| Parameter | Description |
|---|---|
| *<hostname>* | Specifies the name given to a specific device. |

**Default** `awplus`

**Mode** Global Configuration

**Usage notes** Within an AMF network, any device without a user-defined hostname will automatically be assigned a name based on its MAC address.

To efficiently manage your network using AMF, we strongly advise that you devise a naming convention for your network devices and apply an appropriate hostname to each device.

The name must also follow the rules for ARPANET host names. The name must start with a letter, end with a letter or digit, and use only letters, digits, and hyphens. Refer to RFC 1035.

**Example** To set the system name to `HQ-Sales`, use the command:

```
awplus# configure terminal
awplus(config)# hostname HQ-Sales
```

This changes the prompt to:

```
HQ-Sales(config)#
```

To revert to the default hostname `awplus`, use the command:

```
HQ-Sales(config)# no hostname
```

This changes the prompt to:

```
awplus(config)#
```

***NOTE:*** *When AMF is configured, running the* ***no hostname*** *command will apply a hostname that is based on the MAC address of the device node, for example,* ***node_0000_5e00_5301****.*

**Related commands**

show system

# max-fib-routes

**Overview** This command enables you to control the maximum number of FIB routes configured. It operates by providing parameters that enable you to configure preset maximums and warning message thresholds.

***NOTE:*** *When using VRF-lite, this command applies to the Global VRF instance; to set the max-fib-routes for a user-defined VRF instance use the max-fib-routes (VRF) command. For static routes use the max-static-routes command for the Global VRF instance and the max-static-routes (VRF) command for a user-defined VRF instance.*

Use the **no** variant of this command to set the maximum number of FIB routes to the default of 4294967294 FIB routes.

**Syntax**

```
max-fib-routes <1-4294967294> [<1-100>|warning-only]
no max-fib-routes
```

| Parameter | Description |
|---|---|
| `max-fib-routes` | This is the maximum number of routes that can be stored in the device's Forwarding Information dataBase. In practice, other practical system limits would prevent this maximum being reached. |
| *<1-4294967294>* | The allowable configurable range for setting the maximum number of FIB-routes. |
| *<1-100>* | This parameter enables you to optionally apply a percentage value. This percentage will be based on the maximum number of FIB routes you have specified. This will cause a warning message to appear when your routes reach your specified percentage value. Routes can continue to be added until your configured maximum value is reached. |
| `warning-only` | This parameter enables you to optionally apply a warning message. If you set this option a warning message will appear if your maximum configured value is reached. Routes can continue to be added until your device reaches either the maximum capacity value of 4294967294, or a practical system limit. |

**Default** The default number of FIB routes is the maximum number of FIB routes (4294967294).

**Mode** Global Configuration

**Examples** To set the maximum number of dynamic routes to 2000 and warning threshold of 75%, use the following commands:

```
awplus# config terminal
awplus(config)# max-fib-routes 2000 75
```

**Related commands** max-fib-routes (VRF)

# max-static-routes

**Overview** Use this command to set the maximum number of static routes, excluding FIB (Forwarding Information Base) routes.

***NOTE:*** *For FIB routes use the max-fib-routes command.*

Use the **no** variant of this command to set the maximum number of static routes to the default of 1024 static routes.

**Syntax**

```
max-static-routes <1-1024>
no max-static-routes
```

**Default** The default number of static routes is the maximum number of static routes (1024).

**Mode** Global Configuration

**Example** To reset the maximum number of static routes to the default maximum, use the command:

```
awplus# configure terminal
awplus(config)# no max-static-routes
```

***NOTE:*** *Static routes are applied before adding routes to the RIB (Routing Information Base). Therefore, rejected static routes will not appear in the running config.*

**Related commands** max-fib-routes

# no debug all

**Overview** This command disables the debugging facility for all features on your device. This stops the device from generating any diagnostic debugging messages.

You can optionally disable the debugging facility for only the given protocol or feature. The features available depend on your device and will be a subset of the features listed in the Syntax section below.

**Syntax**

```
no debug all [bgp|ipv6 ospf|ipv6 rip|dot1x|nsm|ospf|pim
dense-mode|pim sparse-mode|rip|vrrp]
```

| Parameter | Description |
|---|---|
| bgp | Turns off all debugging for BGP (Border Gateway Protocol). |
| dot1x | Turns off all debugging for IEEE 802.1X port-based network access- control. |
| ipv6 ospf | Turns off all debugging for IPv6 OSPF (Open Shortest Path First). |
| ipv6 rip | Turns off all debugging for IPv6 RIP (Routing Information Protocol). |
| nsm | Turns off all debugging for the NSM (Network Services Module). |
| ospf | Turns off all debugging for OSPF (Open Shortest Path First). |
| pim dense-mode | Turns off all debugging for PIM (Protocol Independent Multicast) Dense Mode. |
| pim sparse-mode | Turns off all debugging for PIM (Protocol Independent Multicast) Sparse Mode. |
| rip | Turns off all debugging for RIP (Routing Information Protocol). |
| vrrp | Turns off all debugging for VRRP (Virtual Router Redundancy Protocol). |

**Default** Disabled

**Mode** Global Configuration and Privileged Exec

**Example** To disable debugging for all features, use the command:

```
awplus# no debug all
```

To disable all BGP debugging, use the command:

```
awplus# no debug all bgp
```

To disable all NSM debugging, use the command:

```
awplus# no debug all nsm
```

To disable all OSPF debugging, use the command:

```
awplus# no debug all ospf
```

To disable all PIM Sparse Mode debugging, use the command:

```
awplus# no debug all pim sparse-mode
```

To disable all RIP debugging, use the command:

```
awplus# no debug all rip
```

To disable all VRRP debugging, use the command:

```
awplus# no debug all vrrp
```

**Related commands**

undebug all

**Command changes**

Version 5.4.7-1.1: **pim dense-mode**, **pim sparse-mode**, and **rip** parameters added

# reboot

**Overview** This command halts the device and performs a cold restart (also known as reload). It displays a confirmation request before restarting.

**Syntax**

```
reboot
reload
```

**Mode** Privileged Exec

**Usage notes** The **reboot** and **reload** commands perform the same action.

**Examples** To restart the device, use the command:

```
awplus# reboot
reboot system? (y/n): y
```

# receive-packet-scheduler

**Overview**

Use this command to configure a scheduling scheme that distributes packets to individual cores in a multi-core CPU.

Receive Packet Scheduling is the mechanism by which packets requiring software forwarding are distributed to individual cores in multi-core CPUs.

Use the **no** variant of this command to set the scheduling scheme back to the default of hash.

**Syntax**

```
receive-packet-scheduler {hash|balanced|split}
no receive-packet-scheduler
```

| Parameter | Description |
|---|---|
| `hash` | Hardware 5-Tuple flow hash-based packet core scheduling. This is the most suitable scheduling scheme for all scenarios. |
| `balanced` | Packets are balanced across cores as efficiently as possible providing the best performance for single flow scenarios. |
| `split` | Half of the CPU cores in a multi-core device are reserved for packet processing. These cores process packets using the default hash-based scheme. The other half of the processing cores are reserved for the IPsec encryption/decryption process. |

**Default**

Hash.

**Mode**

Global Configuration

**Usage notes**

Receive Packet Scheduling is the mechanism by which packets requiring software forwarding are distributed to individual cores in multi-core CPUs.

AlliedWare Plus uses a flow hash based scheme to ensure packets from the same flow are processed in order on the same core. This is generally accepted as the best compromise between efficiency and stability for most network traffic.

There are however a few scenarios where a different mechanism may be required. Use this command to configure alternative packet scheduling algorithms to suit your traffic patterns.

***NOTE:*** *It is very unlikely that there would be any need to change from the default receive-packet-scheduling scheme (hash) as it is the most suitable mechanism for real network traffic.*

***CAUTION:*** *Changing the receive packet scheduling may require IPsec SA's to be processed on a different CPU core. Hence if there are active IPsec SA's when the scheme is changed they may no longer operate correctly. All active SA's can be reset using the* ***clear isakmp sa*** *command.*

**Example**

To configure the receive packet scheduling scheme to **split**, use the following commands:

```
awplus# configure terminal
awplus(config)# receive-packet-scheduler split
```

To set the receive packet scheduling back to the default of **hash**, use the following commands:

```
awplus# configure terminal
awplus(config)# no receive-packet-scheduler
```

**Related commands**

show running-config

**Command changes**

Version 5.4.8-2.1: command added

# reload

**Overview** This command performs the same function as the reboot command.

# show clock

**Overview** This command displays the system's current configured local time and date. It also displays other clock related information such as timezone and summertime configuration.

**Syntax** `show clock`

**Mode** User Exec and Privileged Exec

**Example** To display the system's current local time, use the command:

```
awplus# show clock
```

**Output** Figure 8-1: Example output from the **show clock** command for a device using New Zealand time

```
Local Time: Mon,  17 Oct 2016 13:56:06 +1200
UTC Time:   Mon,  17 Oct 2016 01:56:06 +0000
Timezone: NZST
Timezone Offset: +12:00
Summer time zone: NZDT
Summer time starts: Last Sunday in September at 02:00:00
Summer time ends: First Sunday in April at 02:00:00
Summer time offset: 60 mins
Summer time recurring: Yes
```

**Table 1:** Parameters in the output of the **show clock** command

| Parameter | Description |
|---|---|
| `Local Time` | Current local time. |
| `UTC Time` | Current UTC time. |
| `Timezone` | The current configured timezone name. |
| `Timezone Offset` | Number of hours offset to UTC. |
| `Summer time zone` | The current configured summertime zone name. |
| `Summer time starts` | Date and time set as the start of summer time. |
| `Summer time ends` | Date and time set as the end of summer time. |
| `Summer time offset` | Number of minutes that summer time is offset from the system's timezone. |
| `Summer time recurring` | Whether the device will apply the summer time settings every year or only once. |

**Related commands**

clock set

clock summer-time date

clock summer-time recurring

clock timezone

# show cpu

**Overview** This command displays a list of running processes with their CPU utilization.

For information on filtering and saving command output, see the "Getting Started with AlliedWare Plus" Feature Overview and Configuration Guide.

**Syntax**

```
show cpu [sort {thrds|pri|sleep|runtime}]
```

| Parameter | Description | |
|---|---|---|
| `sort` | Changes the sorting order using the following fields. If you do not specify a field, then the list is sorted by percentage CPU utilization. | |
| | `thrds` | Sort by the number of threads. |
| | `pri` | Sort by the process priority. |
| | `sleep` | Sort by the average time sleeping. |
| | `runtime` | Sort by the runtime of the process. |

**Mode** User Exec and Privileged Exec

**Examples** To show the CPU utilization of current processes, sorting them by the number of threads the processes are using, use the command:

```
awplus# show cpu sort thrds
```

**Output** Figure 8-2: Example output from **show cpu**

```
awplus#show cpu
CPU averages:
 1 second: 0%, 20 seconds: 0%, 60 seconds: 0%
System load averages:
 1 minute: 0.16, 5 minutes: 0.13, 15 minutes: 0.13
Current CPU load:
 userspace: 2%, kernel: 6%, interrupts: 0% iowaits: 0%

user processes
==============
  pid name             thrds  cpu%   pri state sleep% runtime
  763 hostd                1   2.9    20   run     0   128
  803 diag_monitor         1   0.4    20 sleep     0  3292
  768 hsl                 14   0.4    20 sleep     0  3912
    1 init                 1   0.0    20 sleep     0   686
  478 rtccludge            1   0.0    20 sleep     0     9
  504 portmap              1   0.0    20 sleep     0     2
17555 sh                   1   0.0    20 sleep     0     1
17556 console_log_ale      1   0.0    20 sleep     0     1
  515 syslog-ng            1   0.0    20 sleep     0   153
  521 dbus-daemon          1   0.0    20 sleep     0     2
  532 automount            1   0.0    20 sleep     0   453
  571 appmond              1   0.0    20 sleep     0    41
  587 crond                1   0.0    20 sleep     0    17
  589 openhpid             9   0.0    20 sleep     0   284
  609 inetd                1   0.0    20 sleep     0     2
  761 nsm                  1   0.0    20 sleep     0   260
  765 imi                  1   0.0    20 sleep     0   616
  799 almond               1   0.0    20 sleep     0    52
  805 cntrd                1   0.0    20 sleep     0    45
  807 poehw                3   0.0    20 sleep     0   207
  820 authd                1   0.0    20 sleep     0    76
  ...

kernel threads
==============
  pid name              cpu%   pri state sleep% runtime
  144 aio                0.0     0 sleep     0     0
   95 bdi-default        0.0    20 sleep     0     0
  149 crypto             0.0     0 sleep     0     0
  474 flush-31:4         0.0    20 sleep     0     1
  143 fsnotify_mark      0.0    20 sleep     0     0
  426 jffs2_gcd_mtd0     0.0    30 sleep     0   353
   96 kblockd            0.0     0 sleep     0     0
   12 khelper            0.0     0 sleep     0     0
  105 khubd              0.0    20 sleep     0     0
    3 ksoftirqd/0        0.0    20 sleep     0     0
  142 kswapd0            0.0    20 sleep     0     0
    2 kthreadd           0.0    20 sleep     0     0
    4 kworker/0:0        0.0    20 sleep     0    29
    6 linkwatch          0.0     0 sleep     0     0
  466 loop0              0.0     0 sleep     0   801
    7 migration/0        0.0  -100 sleep     0     0
  244 mtdblock0          0.0    20 sleep     0     5
   93 sync_supers        0.0    20 sleep     0     1
```

**Table 2:** Parameters in the output of the **show cpu** command

| Parameter | Description |
|---|---|
| `CPU averages` | Average CPU utilization for the periods stated. |
| `System load averages` | The average number of processes waiting for CPU time for the periods stated. |
| `Current CPU load` | Current CPU utilization specified by load types. |
| `pid` | Identifier number of the process. |
| `name` | A shortened name for the process |
| `thrds` | Number of threads in the process. |
| `cpu%` | Percentage of CPU utilization that this process is consuming. |
| `pri` | Process priority state. |
| `state` | Process state; one of "run", "sleep", "zombie", and "dead". |
| `sleep%` | Percentage of time that the process is in the sleep state. |
| `runtime` | The time that the process has been running for, measured in jiffies. A jiffy is the duration of one tick of the system timer interrupt. |

**Related commands**

show memory

show memory allocations

show memory history

show memory pools

show process

# show cpu history

**Overview** This command prints a graph showing the historical CPU utilization.

For information on filtering and saving command output, see the "Getting Started with AlliedWare Plus" Feature Overview and Configuration Guide.

**Syntax**

```
show cpu history
```

**Mode** User Exec and Privileged Exec

**Usage notes** This command's output displays three graphs of the percentage CPU utilization:

- per second for the last minute, then
- per minute for the last hour, then
- per 30 minutes for the last 30 hours.

**Examples** To display a graph showing the historical CPU utilization of the device, use the command:

```
awplus# show cpu history
```

**Output** Figure 8-3: Example output from the **show cpu history** command

```
Per second CPU load history

100
 90
 80
 70
 60
 50
 40
 30
 20                                          *
 10 ******************************************* ****************
    |....|....|....|....|....|....|....|....|....|....|....|....
    Oldest                                                  Newest
        CPU load% per second (last 60 seconds)
              * = average CPU load%
```

```
Per minute CPU load history

100
 90
 80
 70
 60                                                  +
 50
 40
 30
 20 ++ ********* ******* **** + ****** **** *** ***** *********
 10 ************************************************************
    |....|....|....|....|....|....|....|....|....|....|....|....
    Oldest                                                Newest
        CPU load% per minute (last 60 minutes)
              * = average CPU load%, + = maximum

Per (30) minute CPU load history

100
 90
 80
 70                                                        +
 60
 50
 40
 30
 20
 10                                                        ***
    |....|....|....|....|....|....|....|....|....|....|....|....
    Oldest                                                Newest
        CPU load% per 30 minutes (last 60 values / 30 hours)
              * = average, - = minimum, + = maximum
```

**Related commands**

show memory

show memory allocations

show memory pools

show process

# show debugging

**Overview** This command displays all debugging options in alphabetical order, indicating whether debugging is enabled or disabled for each feature.

For information on filtering and saving command output, see the "Getting Started with AlliedWare Plus" Feature Overview and Configuration Guide.

**Syntax** `show debugging`

**Mode** User Exec and Privileged Exec

**Example** To find out what debugging is enabled, use the command:

```
awplus# show debugging
```

**Output** Figure 8-4: Example output from the **show debugging** command

```
awplus#show debugging
AAA debugging status:
  Authentication debugging is off
  Authorization debugging is off
  Accounting debugging is off
Antivirus Debugging Status: off
% Error: ATMF is not configured.
BGP debugging status:
  BGP debugging is off
  BGP nht debugging is off
  BGP nsm debugging is off
  BGP events debugging is off
  BGP keepalives debugging is off
  BGP updates debugging is off
  BGP fsm debugging is off
  BGP filter debugging is off
  BGP Route Flap Dampening debugging is off

Firewall Debugging Status: off
Traffic shaping debugging status: off
IGMP Debugging status:
  IGMP Decoder debugging is off
  IGMP Encoder debugging is off
  IGMP Events debugging is off
  IGMP FSM debugging is off
  IGMP Tree-Info-Base (TIB) debugging is off
DNS Relay debugging status:
  debugging is off
IP packet debugging status:
OSPFv3 debugging status:
...
```

# show interface memory

**Overview** This command displays the shared memory used by either all interfaces, or the specified interface or interfaces. The output is useful for diagnostic purposes by Allied Telesis authorized service personnel.

For information on filtering and saving command output, see the "Getting Started with AlliedWare Plus" Feature Overview and Configuration Guide.

**Syntax**

```
show interface memory
show interface <port-list> memory
```

| Parameter | Description |
|---|---|
| *<port-list>* | Display information about only the specified port or ports. The port list can be:<br>• an Eth port (e.g. eth1)<br>• an 802.1Q Ethernet sub-interface (e.g. eth1.10, where '10' is the VLAN ID specified by the **encapsulation dot1q** command)<br>• a switchport (e.g. port1.0.4)<br>• a static channel group (e.g. sa2)<br>• a dynamic (LACP) channel group (e.g. po2)<br>• a continuous range of ports separated by a hyphen (e.g. port1.0.1-1.0.4)<br>• a comma-separated list (e.g. port1.0.1,port1.0.3-1.0.4). Do not mix port types in the same list. |

**Mode** User Exec and Privileged Exec

**Example** To display the shared memory used by all interfaces, use the command:

```
awplus# show interface memory
```

To display the shared memory used by port1.0.1 and port1.0.3 to port1.0.4, use the command:

```
awplus# show interface port1.0.1,port1.0.3-port1.0.4 memory
```

**Output** Figure 8-5: Example output from the **show interface memory** command

```
awplus#show interface memory
Vlan blocking state shared memory usage
---------------------------------------------
Interface     shmid        Bytes Used     nattch     Status
port1.0.1     294921       512            1
port1.0.2     491535       512            1
port1.0.3     458766       512            1
...
eth1          393228       512            1
lo            360459       512            1
```

Figure 8-6: Example output from **show interface <port-list> memory** for a list of interfaces

```
awplus#show interface port1.0.1,port1.0.3-port1.0.4 memory
Vlan blocking state shared memory usage
---------------------------------------------
Interface    shmid        Bytes Used     nattch     Status
port1.0.1    589842       512            1
port1.0.3    688149       512            1
port1.0.4    327690       512            1
```

**Related commands**

show interface brief

show interface status

show interface switchport

# show memory

**Overview** This command displays the memory used by each process that is currently running.

For information on filtering and saving command output, see the "Getting Started with AlliedWare Plus" Feature Overview and Configuration Guide.

**Syntax** `show memory [sort {size|peak|stk}]`

| Parameter | Description | |
|---|---|---|
| `sort` | Changes the sorting order for the list of processes. If you do not specify this, then the list is sorted by percentage memory utilization. | |
| | `size` | Sort by the amount of memory the process is currently using. |
| | `peak` | Sort by the amount of memory the process is currently using. |
| | `stk` | Sort by the stack size of the process. |

**Mode** User Exec and Privileged Exec

**Example** To display the memory used by the current running processes, use the command:

```
awplus# show memory
```

**Output** Figure 8-7: Example output from **show memory**

```
awplus#show memory

RAM total: 824680 kB; free: 635032 kB; buffers: 20272 kB

user processes
==============
  pid name             mem%  size(kB)  peak(kB)  data(kB)   stk(kB)  virt(kB)
 1443 squid             1.9     16408    299768     23568       264    299768
 1441 squid             1.9     16416    299776     23568       272    299776
 1440 squid             1.9     16416    299776     23568       272    299776
 1439 squid             1.9     16416    299776     23568       272    299776
 1438 squid             1.9     16152    298928     23568       264    298864
 1226 imi               1.3     10968     23104      2760       160     22912
 1228 hsl               1.2     10512    692944    608160       144    631856
 2156 imish             1.0      8856    158456     75904       160     94696
 1221 nsm               1.0      9008     21696      1968       152     21632
 1296 ospfd             0.8      6936     19144      1016       144     19080
 1293 bgpd              0.8      7264     19184      1168       152     19120
 1291 pimd              0.8      6600     20992      2944       144     20928
 1283 ripd              0.8      6640     18328       944       152     18256
...
```

**Table 3:** Parameters in the output of the **show memory** command

| Parameter | Description |
|---|---|
| `RAM total` | Total amount of RAM memory free. |
| `free` | Available memory size. |
| `buffers` | Memory allocated kernel buffers. |
| `pid` | Identifier number for the process. |
| `name` | Short name used to describe the process. |
| `mem%` | Percentage of memory utilization the process is currently using. |
| `size` | Amount of memory currently used by the process. |
| `peak` | Greatest amount of memory ever used by the process. |
| `data` | Amount of memory used for data. |
| `stk` | The stack size. |

**Related commands**

show memory allocations

show memory history

show memory pools

show memory shared

# show memory allocations

**Overview** This command displays the memory allocations used by processes.

For information on filtering and saving command output, see the "Getting Started with AlliedWare Plus" Feature Overview and Configuration Guide.

**Syntax** `show memory allocations [<process>]`

| Parameter | Description |
|---|---|
| *<process>* | Displays the memory allocation used by the specified process. |

**Mode** User Exec and Privileged Exec

**Example** To display the memory allocations used by all processes on your device, use the command:

```
awplus# show memory allocations
```

**Output** Figure 8-8: Example output from the **show memory allocations** command

```
awplus#show memory allocations
Memory allocations for imi
-----------------------------

Current 15093760 (peak 15093760)

Statically allocated memory:
 - binary/exe                 :    1675264
 - libraries                  :    8916992
 - bss/global data            :    2985984
 - stack                      :     139264

Dynamically allocated memory (heap):
 - total allocated            :    1351680
   - in use                   :    1282440
   - non-mmapped              :    1351680
 - maximum total allocated    :    1351680
 - total free space           :      69240
   - releasable               :      68968
   - space in freed fastbins  :         16

Context
           filename:line   allocated      freed
 +            lib.c:749          484
.
.
.
```

**Related commands**

show memory

show memory history

show memory pools

show memory shared

show tech-support

# show memory history

**Overview**

This command prints a graph showing the historical memory usage.

For information on filtering and saving command output, see the "Getting Started with AlliedWare Plus" Feature Overview and Configuration Guide.

**Syntax**

```
show memory history
```

**Mode**

User Exec and Privileged Exec

**Usage notes**

This command's output displays three graphs of the percentage memory utilization:

- per second for the last minute, then
- per minute for the last hour, then
- per 30 minutes for the last 30 hours.

**Examples**

To show a graph displaying the historical memory usage, use the command:

```
awplus# show memory history
```

**Output**

Figure 8-9: Example output from the **show memory history** command

```
Per minute memory utilization history

100
 90
 80
 70
 60
 50
 40************************************************************
 30
 20
 10
    |....|....|....|....|....|....|....|....|....|....|....|....
    Oldest                                                  Newest
        Memory utilization% per minute (last 60 minutes)
              * = average memory utilisation%.
...
```

**Related commands**

show memory allocations

show memory pools

show memory shared

show tech-support

# show memory pools

**Overview** This command shows the memory pools used by processes.

For information on filtering and saving command output, see the "Getting Started with AlliedWare Plus" Feature Overview and Configuration Guide.

**Syntax**

```
show memory pools [<process>]
```

| Parameter | Description |
|---|---|
| *<process>* | Displays the memory pools used by the specified process. |

**Mode** User Exec and Privileged Exec

**Example** To shows the memory pools used by processes, use the command:

```
awplus# show memory pools
```

**Output** Figure 8-10: Example output from the **show memory pools** command

```
awplus#show memory pools
Memory pools for imi
----------------------

Current 15290368 (peak 15290368)

Statically allocated memory:
 - binary/exe                 :    1675264
 - libraries                  :    8916992
 - bss/global data            :    2985984
 - stack                      :     139264

Dynamically allocated memory (heap):
 - total allocated            :    1548288
   - in use                   :    1479816
   - non-mmapped              :    1548288
 - maximum total allocated    :    1548288
 - total free space           :      68472
   - releasable               :      68200
   - space in freed fastbins  :         16
.
.
.
```

**Related commands**

show memory allocations

show memory history

show tech-support

# show memory shared

**Overview** This command displays shared memory allocation information. The output is useful for diagnostic purposes by Allied Telesis authorized service personnel.

For information on filtering and saving command output, see the "Getting Started with AlliedWare Plus" Feature Overview and Configuration Guide.

**Syntax** `show memory shared`

**Mode** User Exec and Privileged Exec

**Example** To display information about the shared memory allocation used on the device, use the command:

```
awplus# show memory shared
```

**Output** Figure 8-11: Example output from the **show memory shared** command

```
awplus#show memory shared
Shared Memory Status
----------------------------
Segment allocated  = 39
Pages allocated    = 39
Pages resident     = 11

Shared Memory Limits
----------------------------
Maximum number of segments          = 4096
Maximum segment size (kbytes)       = 32768
Maximum total shared memory (pages) = 2097152
Minimum segment size (bytes)        = 1
```

**Related commands**

show memory allocations

show memory history

show memory

# show process

**Overview** This command lists a summary of the current running processes.

For information on filtering and saving command output, see the "Getting Started with AlliedWare Plus" Feature Overview and Configuration Guide.

**Syntax**

```
show process [sort {cpu|mem}]
```

| Parameter | Description | |
|---|---|---|
| sort | Changes the sorting order for the list of processes. | |
| | cpu | Sorts the list by the percentage of CPU utilization. |
| | mem | Sorts the list by the percentage of memory utilization. |

**Mode** User Exec and Privileged Exec

**Usage notes** This command displays a snapshot of currently-running processes. If you want to see CPU or memory utilization history instead, use the commands show cpu history or show memory history.

**Example** To display a summary of the current running processes, use the command:

```
awplus# show process
```

**Output** Figure 8-12: Example output from the **show process** command

```
CPU averages:
 1 second: 8%, 20 seconds: 5%, 60 seconds: 5%
System load averages:
 1 minute: 0.04, 5 minutes: 0.08, 15 minutes: 0.12
Current CPU load:
 userspace: 9%, kernel: 9%, interrupts: 0% iowaits: 0%
RAM total: 514920 kB; free: 382600 kB; buffers: 16368 kB

user processes
==============
pid name         thrds  cpu%  mem%   pri  state  sleep%
962 pss             12     0     6    25  sleep       5
1   init             1     0     0    25  sleep       0
797 syslog-ng        1     0     0    16  sleep      88
...
kernel threads
==============
pid name         cpu%  pri  state  sleep%
71  aio/0        0     20   sleep  0
3   events/0     0     10   sleep  98
...
```

**Table 4:** Parameters in the output from the **show process** command

| Parameter | Description |
|---|---|
| `CPU averages` | Average CPU utilization for the periods stated. |
| `System load averages` | The average number of processes waiting for CPU time for the periods stated. |
| `Current CPU load` | Current CPU utilization specified by load types |
| `RAM total` | Total memory size. |
| `free` | Available memory. |
| `buffers` | Memory allocated to kernel buffers. |
| `pid` | Identifier for the process. |
| `name` | Short name to describe the process. |
| `thrds` | Number of threads in the process. |
| `cpu%` | Percentage of CPU utilization that this process is consuming. |
| `mem%` | Percentage of memory utilization that this process is consuming. |
| `pri` | Process priority. |
| `state` | Process state; one of “run”, “sleep”, “stop”, “zombie”, or “dead”. |
| `sleep%` | Percentage of time the process is in the sleep state. |

**Related commands**

show cpu

show cpu history

# show reboot history

**Overview** Use this command to display the device's reboot history.

**Syntax** `show reboot history`

**Mode** User Exec and Privileged Exec

**Example** To show the reboot history, use the command:

```
awplus# show reboot history
```

**Output** Figure 8-13: Example output from the **show reboot history** command

```
awplus#show reboot history

<date>     <time>    <type>      <description>
-----------------------------------------------
2016-10-10 01:42:04  Expected    User Request
2016-10-10 01:35:31  Expected    User Request
2016-10-10 01:16:25  Unexpected  Rebooting due to critical process (network/nsm)
failure!
2016-10-10 01:11:04  Unexpected  Rebooting due to critical process (network/nsm)
failure!
2016-10-09 19:56:16  Expected    User Request
2016-10-09 19:51:20  Expected    User Request
```

**Table 5:** Parameters in the output from the **show reboot history** command

| Parameter | Description |
|---|---|
| `Unexpected` | A non-intended reboot. |
| `Expected` | A planned or user-triggered reboot. |
| `User request` | User initiated reboot via the CLI. |

**Related commands** show tech-support

# show router-id

**Overview** Use this command to show the Router ID of the current system.

**Syntax** `show router-id`

**Mode** User Exec and Privileged Exec

**Example** To display the Router ID of the current system, use the command:

```
awplus# show router-id
```

**Output** Figure 8-14: Example output from the **show router-id** command

```
awplus>show router-id
Router ID: 10.55.0.2 (automatic)
```

# show system

**Overview** This command displays general system information about the device, including the hardware, memory usage, and software version. It also displays location and contact details when these have been set.

For information on filtering and saving command output, see the "Getting Started with AlliedWare Plus" Feature Overview and Configuration Guide.

**Syntax** `show system`

**Mode** User Exec and Privileged Exec

**Example** To display configuration information, use the command:

```
awplus# show system
```

**Output** Figure 8-15: Example output from **show system**

```
System Status                                          Mon Sep 28 08:42:16 2020

Board        ID  Bay     Board Name                       Rev   Serial number
--------------------------------------------------------------------------------
Base        425          AR3050S                          X1-0  A05049G27NE2004
--------------------------------------------------------------------------------
RAM:  Total: 824680 kB Free: 634632 kB
Flash: 3.6GB Used: 109.1MB Available: 3.3GB
--------------------------------------------------------------------------------
Environment Status : Normal
Uptime             : 0 days 23:11:05
Bootloader version : 5.0.6

Current software : AR3050S-5.5.0-1.3.rel
Software version : 5.5.0-1.3
Build date       : Wed Sep 9 21:10 UTC 2020

Current boot config: flash:/default.cfg (file exists)

System Name
 awplus
System Contact
System Location
```

**Related commands** show system environment

# show system environment

**Overview** This command displays the current environmental status of your device and any attached PSU, XEM, or other expansion option. The environmental status covers information about temperatures, fans, and voltage.

For information on filtering and saving command output, see the "Getting Started with AlliedWare Plus" Feature Overview and Configuration Guide.

**Syntax**

```
show system environment
```

**Mode** User Exec and Privileged Exec

**Example** To display the system's environmental status, use the command:

```
awplus# show system environment
```

**Output** Figure 8-16: Example output from **show system environment**

```
awplus#show system environment
Environment Monitoring Status

Overall Status: Normal

Resource ID: 1  Name: AR3050S
ID  Sensor (Units)                      Reading  Low Limit High Limit Status
1   Fan: Fan (Rpm)                        3516       2411        -       Ok
2   Voltage: 2.5V (Volts)                2.461      2.344      2.865     Ok
3   Voltage: Battery (Volts)             3.181      2.700      3.586     Ok
4   Voltage: 3.3V (Volts)                3.266      2.973      3.627     Ok
5   Voltage: 5.0V (Volts)                4.974      4.505      5.495     Ok
6   Voltage: 12V (Volts)                11.563     10.813     13.188     Ok
7   Voltage: 0.92V (Volts)               0.944      0.872      0.970     Ok
8   Temp: Internal (Degrees C)              32   58(Hyst)         65     Ok
```

**Related commands**

show system

show system environment counters

# show system environment counters

**Overview** Use this command to see the environmental sensor counters.

**Syntax** `show system environment counters`

**Mode** User Exec and Privileged Exec

**Example** To show the environment sensor counters, use the following command:

```
awplus# show system environment counters
```

**Output** Figure 8-17: Example output from **show system environment counters**

```
awplus#show system environment counters
Environment Monitoring Counters

Resource ID: 1  Name: AR3050S
ID Sensor                    Value    Threshold Checked  Read   Alarm    Alarm
                             readings readings  readings errors asserted cleared
1  Fan: Fan                        5         4        0      0        0       0
2  Voltage: 2.5V                   5         8        0      0        0       0
3  Voltage: Battery                5         8        0      0        0       0
4  Voltage: 3.3V                   5         8        0      0        0       0
5  Voltage: 5.0V                   5         8        0      0        0       0
6  Voltage: 12.0V                  5         8        0      0        0       0
7  Voltage: 0.85V                  5         8        0      0        0       0
8  Temp: Internal                  5         7        0      0        0       0
```

Table 8-1: Parameters in the output from **show system environment counters**

| Parameter | Description |
|---|---|
| `Value readings` | Number of times that the value of this sensor has been read. |
| `Threshold readings` | Number of times that a threshold value related to this sensor has been read. |
| `Checked readings` | Number of times that this sensor has gone outside a threshold and has been re-read to confirm this is a genuine error. |
| `Read errors` | Number of times that there was an error returned when reading this sensor or one of its threshold values. |
| `Alarm asserted` | Number of times that this sensor has entered the fault state. |
| `Alarm cleared` | Number of times that this sensor has left the fault state. |

**Related commands**

show system

show system environment

**Command changes**

Version 5.5.0-0.1: command added

# show system interrupts

**Overview** Use this command to display the number of interrupts for each IRQ (Interrupt Request) used to interrupt input lines on a PIC (Programmable Interrupt Controller) on your device.

For information on filtering and saving command output, see the "Getting Started with AlliedWare Plus" Feature Overview and Configuration Guide.

**Syntax** `show system interrupts`

**Mode** User Exec and Privileged Exec

**Example** To display information about the number of interrupts for each IRQ in your device, use the command:

```
awplus# show system interrupts
```

**Output** Figure 8-18: Example output from the **show system interrupts** command

```
awplus#show system interrupts

          CPU0       CPU1
 8:     151378     152020      Core Enabled   0   timer
 16:         0          0       CIU Enabled   0   Ethernet
 25:       256          0     CIU-W Enabled   0   octeon_wdt
 26:         0        256     CIU-W Enabled   0   octeon_wdt
 41:    946096     947120     CIU-M Enabled   0   SMP-IPI
 51:         0          0       CIU Enabled   0   RGMII
 53:         0          0       CIU Enabled   0   Ethernet
 59:      1025          0       CIU Enabled   0   serial
 60:      5825          0       CIU Enabled   0   i2c-octeon
 61:         3          0       CIU Enabled   0   i2c-octeon
 63:         0          0       CIB Enabled   0   xhci-hcd:usb1
 65:         0          0  CIU-GPIO Enabled   0   0-0021
 ...
```

**Related commands** show system environment

# show system mac

**Overview** This command displays the physical MAC address of the device.

**Syntax** `show system mac`

**Mode** User Exec and Privileged Exec

**Example** To display the physical MAC address enter the following command:

```
awplus# show system mac
```

**Output** Figure 8-19: Example output from the **show system mac** command

```
awplus#show system mac
0200.0034.5682 (eth1)
0200.0034.5683 (eth2)
0200.0034.5684 (system)
```

# show system pci device

**Overview** Use this command to display the PCI devices on your device.

**Syntax** `show system pci device`

**Mode** User Exec and Privileged Exec

**Example** To display information about the PCI devices on your device, use the command:

```
awplus# show system pci device
```

**Output**

```
awplus#show system pci device
00:0c.0 Class 0200: 11ab:00d1 (rev 01)
        Flags: bus master, 66Mhz, medium devsel, latency 128, IRQ 113
        Memory at 5ffff000 (32-bit, non-prefetchable) [size=4K]
        Memory at 58000000 (32-bit, non-prefetchable) [size=64M]

00:0d.0 Class 0200: 11ab:00d1 (rev 01)
        Flags: bus master, 66Mhz, medium devsel, latency 128, IRQ 116
        Memory at 57fff000 (32-bit, non-prefetchable) [size=4K]
        Memory at 50000000 (32-bit, non-prefetchable) [size=64M]
```

**Related commands** show system environment

show system pci tree

# show system pci tree

**Overview** Use this command to display the PCI tree on your device.

**Syntax**

```
show system pci tree
```

**Mode** User Exec and Privileged Exec

**Example** To display information about the PCI tree on your device, use the command:

```
awplus# show system pci tree
```

**Related commands**

show system environment

show system pci device

# show system serialnumber

**Overview** This command shows the serial number information for the device.

For information on filtering and saving command output, see the "Getting Started with AlliedWare Plus" Feature Overview and Configuration Guide.

**Syntax** `show system serialnumber`

**Mode** User Exec and Privileged Exec

**Example** To display the serial number information for the device, use the command:

```
awplus# show system serialnumber
```

**Output** Figure 8-20: Example output from the **show system serialnumber** command

```
awplus#show system serialnumber
45AX5300X
```

# show tech-support

**Overview** This command generates system and debugging information for the device and saves it to a file.

This command is useful for collecting a large amount of information so that it can then be analyzed for troubleshooting purposes. The output of this command can be provided to technical support staff when reporting a problem.

You can optionally limit the command output to display only information for a given protocol or feature. The features available depend on your device and will be a subset of the features listed in the table below.

**Syntax**

```
show tech-support
{[all|atmf|auth|bgp|card|dhcpsn|epsr|firewall|igmp|ip|ipv6|mld
|openflow|ospf|ospf6|pim|rip|ripng|stack|stp|system|tacacs+|
update]} [outfile <filename>]
```

| Parameter | Description |
|---|---|
| `all` | Display full information |
| `atmf` | Display ATMF-specific information |
| `auth` | Display authentication-related information |
| `bgp` | Display BGP-related information |
| `card` | Display Chassis Card specific information |
| `dhcpsn` | Display DHCP Snooping specific information |
| `epsr` | Display EPSR specific information |
| `firewall` | Display firewall specific information |
| `igmp` | Display IGMP specific information |
| `ip` | Display IP specific information |
| `ipv6` | Display IPv6 specific information |
| `mld` | Display MLD specific information |
| `openflow` | Display information related to OpenFlow |
| `ospf` | Display OSPF related information |
| `ospf6` | Display OSPF6 specific information |
| `pim` | Display PIM related information |
| `rip` | RIP related information |
| `ripng` | Display RIPNG specific information |
| `stack` | Display stacking device information |
| `stp` | Display STP specific information |
| `system` | Display general system information |

| Parameter | Description |
|---|---|
| `tacacs+` | Display TACACS+ information |
| `update` | Display resource update specific information |
| `\|` | Output modifier |
| `>` | Output redirection |
| `>>` | Output redirection (append) |
| `outfile` | Output file name |
| `<filename>` | Specifies a name for the output file. If no name is specified, this file will be saved as: tech-support.txt.gz. |

**Default** Captures **all** information for the device.

By default the output is saved to the file 'tech-support.txt.gz' in the current directory. If this file already exists in the current directory then a new file is generated with the time stamp appended to the file name, for example 'tech-support20161009.txt.gz', so the previous file is retained.

**Usage notes** The command generates a large amount of output, which is saved to a file in compressed format. The output file name can be specified by outfile option. If the output file already exists, a new file name is generated with the current time stamp. If the output filename does not end with ".gz", then ".gz" is appended to the filename. Since output files may be too large for Flash on the device we recommend saving files to external memory or a TFTP server whenever possible to avoid device lockup. This method is not likely to be appropriate when running the working set option of AMF across a range of physically separated devices.

**Mode** Privileged Exec

**Examples** To produce the output needed by technical support staff, use the command:

```
awplus# show tech-support
```

# speed (asyn)

**Overview** This command changes the console speed from the device. Note that a change in console speed is applied for subsequent console sessions. Exit the current session to enable the console speed change using the clear line console command.

**Syntax** `speed <console-speed-in-bps>`

| Parameter | Description | |
|---|---|---|
| *<console-speed-in-bps>* | Console speed Baud rate in bps (bits per second). | |
| | 1200 | 1200 Baud |
| | 2400 | 2400 Baud |
| | 9600 | 9600 Baud |
| | 19200 | 19200 Baud |
| | 38400 | 38400 Baud |
| | 57600 | 57600 Baud |
| | 115200 | 115200 Baud |

**Default** The default console speed baud rate is 9600 bps.

**Mode** Line Configuration

**Usage notes** This command is used to change the console (asyn) port speed. Set the console speed to match the transmission rate of the device connected to the console (asyn) port on your device.

**Example** To set the terminal console (asyn0) port speed from the device to 57600 bps, then exit the session, use the commands:

```
awplus# configure terminal
awplus(config)# line console 0
awplus(config-line)# speed 57600
awplus(config-line)# exit
awplus(config)# exit
awplus# exit
```

Then log in again to enable the change:

```
awplus login:
Password:
awplus>
```

**Related commands**

clear line console

line

show running-config

show startup-config

speed

# terminal monitor

**Overview**

Use this command to display debugging output on a terminal.

To display the cursor after a line of debugging output, press the Enter key.

Use the command **terminal no monitor** or **no terminal monitor** to stop displaying debugging output on the terminal. Alternatively, you can use the timeout option to stop displaying debugging output on the terminal after a set time.

**Syntax**

```
terminal monitor [<1-60>]
terminal no monitor
no terminal monitor
```

| Parameter | Description |
|---|---|
| *<1-60>* | Set a timeout between 1 and 60 seconds for terminal output. |

**Default**

Disabled

**Mode**

User Exec and Privileged Exec

**Examples**

To display debugging output on a terminal, enter the command:

```
awplus# terminal monitor
```

To display debugging on the terminal for 60 seconds, enter the command:

```
awplus# terminal monitor 60
```

To stop displaying debugging output on the terminal, use the command:

```
awplus# no terminal monitor
```

**Related commands**

All debug commands

**Command changes**

Version 5.4.8-0.2: **no terminal monitor** added as an alias for **terminal no monitor**

# undebug all

**Overview** This command applies the functionality of the no debug all command.

# 9 Pluggables and Cabling Commands

## Introduction

**Overview**

This chapter provides an alphabetical reference of commands used to configure and monitor Pluggables and Cabling, including:

- Optical Digital Diagnostic Monitoring (DDM) to help find fiber issues when links go down
- Active Fiber Monitoring for detecting changes in optical power received over fiber cables.

For more information, see the Pluggables and Cabling Feature Overview and Configuration Guide.

**Command List**


- "clear fiber-monitoring interface" on page 325
- "debug fiber-monitoring" on page 326
- "fiber-monitoring action" on page 328
- "fiber-monitoring baseline" on page 330
- "fiber-monitoring enable" on page 332
- "fiber-monitoring interval" on page 333
- "fiber-monitoring sensitivity" on page 334
- "show system fiber-monitoring" on page 336
- "show system pluggable" on page 339
- "show system pluggable detail" on page 341
- "show system pluggable diagnostics" on page 344

# clear fiber-monitoring interface

**Overview** Use this command to clear the Active Fiber Monitoring state of a port. It clears the alarm, baseline and history and starts monitoring from the beginning. It does not change the configuration.

**Syntax**

```
clear fiber-monitoring interface <port>
```

| Parameter | Description |
|---|---|
| *<port>* | The name of the port to reset Active Fiber Monitoring on. |

**Default** n/a

**Mode** Privileged Exec

**Usage notes** Normally, you do not need to clear the Active Fiber Monitoring state of a port. If the issue resolves itself and the monitored optical power returns to the baseline, the alarm clears automatically.

However, you may need to clear the Active Fiber Monitoring state if the optical power level reduces for a known reason, causing the port to be stuck in the alarm state. In this situation, the alarm will not clear automatically, because Active Fiber Monitoring does not update the baseline when the port is in the alarm state, for security reasons.

**Example** To clear the Active Fiber Monitoring state for interface eth1, use the command:

```
awplus# clear fiber-monitoring interface eth1
```

**Related commands** show system fiber-monitoring

**Command changes** Version 5.4.8-0.2: command added

# debug fiber-monitoring

**Overview** Use this command to enable debugging of active fiber monitoring on the specified ports.

Use the **no** variant of this command to disable debugging on all ports or the specified ports.

**Syntax**

```
debug fiber-monitoring interface <port-list>
no debug fiber-monitoring [interface <port-list>]
```

| Parameter | Description |
|---|---|
| *<port-list>* | The list of fiber ports to enable or disable debugging for, as a single port, a comma separated list or a hyphenated range. |

**Default** Debugging of active fiber monitoring is disabled by default.

**Mode** User Exec/Privileged Exec

**Usage** While debugging is enabled by this command for a port, all the optical power readings for the port are sent to the console.

**Example** To enable debugging messages for active fiber monitoring of eth1 to be sent to the console, use the commands:

```
awplus# debug fiber-monitoring interface eth1
awplus# terminal monitor
```

To disable debugging messages for active fiber monitoring on eth1, use the command:

```
awplus# no debug fiber-monitoring interface eth1
```

To disable all debugging messages for active fiber monitoring, use the command:

```
awplus# no debug fiber-monitoring
```

**Output** Figure 9-1: Example output from **debug fiber-monitoring**

```
awplus#debug fiber-monitoring interface eth1
awplus#terminal monitor
% Warning: Console logging enabled
awplus#01:42:50 awplus Pluggable[522]: Fiber-monitor port2.0.1: Channel:1
Reading:1748 Baseline:1708 Threshold:1356
01:42:52 awplus Pluggable[522]: Fiber-monitor port2.0.1: Channel:1 Reading:1717
Baseline:1709 Threshold:1357
01:42:54 awplus Pluggable[522]: Fiber-monitor port2.0.1: Channel:1 Reading:1780
Baseline:1709 Threshold:1357
01:42:56 awplus Pluggable[522]: Fiber-monitor port2.0.1: Channel:1 Reading:1685
Baseline:1710 Threshold:1358
01:42:58 awplus Pluggable[522]: Fiber-monitor port2.0.1: Channel:1 Reading:1701
Baseline:1710 Threshold:1358
01:43:01 awplus Pluggable[522]: Fiber-monitor port2.0.1: Channel:1 Reading:1733
Baseline:1709 Threshold:1357
```

**Related commands** show system fiber-monitoring

# fiber-monitoring action

**Overview** Use this command to specify an action to be taken if the optical power received on the port changes from the baseline by the amount specified in the **fiber-monitoring sensitivity** command.

Use the **no** variant of this command to remove the specified action or all actions from the port.

**Syntax**

```
fiber-monitoring action [trap] [shutdown] [continuous]
no fiber-monitoring action [trap|shutdown]
```

| Parameter | Description |
|---|---|
| `trap` | Send an SNMP notification. |
| `shutdown` | Shutdown the port. |
| `continuous` | Make the action or actions happen continuously (every polling interval) while the sensor is in the alarm state. Otherwise, the action only happens when the alarm is triggered or cleared. |

**Default** By default a log message is generated, but no additional action is performed.

**Mode** Interface Configuration mode for a fiber port.

**Usage** If fiber monitoring is enabled and this command is not used to set an action, a change in received power on a fiber port only generates a log message.

**Example** To set the device to send an SNMP trap when eth1 or eth2 receive reduced power and when that reduced-power alarm is cleared, use the commands:

```
awplus(config)# interface eth1-eth2
awplus(config-if)# fiber-monitoring action trap
```

To set the device to send an SNMP trap when eth1 or eth2 receive reduced power, and every polling interval after that until the alarm is cleared, use the commands:

```
awplus(config)# interface eth1-eth2
awplus(config-if)# fiber-monitoring action trap continuous
```

To set the device to send an SNMP trap and to shut down the port when eth1 or eth2 receive reduced power, use the commands:

```
awplus(config)# interface eth1-eth2
awplus(config-if)# fiber-monitoring action trap shutdown
```

To set the device to stop shutting down the port if eth1 or eth2 receive reduced power, use the commands:

```
awplus(config)# interface eth1-eth2
awplus(config-if)# no fiber-monitoring action shutdown
```

If the device is set to send an SNMP trap for those ports, it will continue to do so.

To set the device not to perform any action when it receives reduced power on eth1 or eth2, except sending a log message, use the commands:

```
awplus(config)# interface eth1-eth2
awplus(config-if)# no fiber-monitoring action
```

**Related commands**

fiber-monitoring sensitivity

show system fiber-monitoring

**Command changes**

Version 5.4.8-0.2: **continuous** parameter added

# fiber-monitoring baseline

**Overview**

Use this command to configure how the baseline value for comparison is calculated for active fiber monitoring on the port.

Note that alarm generation will not commence until the link has been up for a full averaging period.

Use the **no** variant of this command to set the fiber-monitoring baseline to its default value.

**Syntax**

```
fiber-monitoring baseline average <12-150> [interval <2-86400>]
fiber-monitoring baseline fixed <1-65535>
no fiber-monitoring baseline
```

| Parameter | Description |
|---|---|
| `average <12-150>` | Set the baseline optical power received to be based on the moving average of the specified number of most recent (non-zero) values. Default is to use this setting and 12 values. |
| `interval <2-86400>` | Optionally, specify the optical power polling interval for determining the baseline, in seconds. By default, the baseline polling interval is the same as the monitoring polling interval, which is 5 seconds by default.<br>If specified, this baseline interval should be larger than the monitoring interval.<br>Even if you specify a baseline interval, Active Fiber Monitoring will use the monitoring interval to calculate the initial baseline average. This means the first x baseline readings will be taken at the monitoring interval, where x is the number of readings specified in the **average** parameter.<br>See Usage below for more information. |
| `fixed <1-65535>` | Set the baseline to a fixed level of received optical power in 0.0001mW. Not recommended—see Usage below. |

**Default**

The default is a moving average of the last 12 values, taken at the same interval as the monitoring interval. The monitoring interval is set using the **fiber-monitoring interval** command. If the monitoring interval is set to its default of 5 seconds, the **fiber-monitoring baseline** default will be the average over the last minute.

**Mode**

Interface Configuration for a fiber port

**Usage notes**

There are two ways to configure the baseline. The first is to choose a number of readings to average. This is the default and recommended method. The second is to set a fixed value in units of x0.0001mW.

If a fixed value is required, the easiest way to choose a value is to enable fiber monitoring on the port and use the **show system fiber-monitoring** command to see what readings you can expect.

***CAUTION:*** *We do not recommend setting a fixed value because gradual change over time caused by temperature fluctuations, etc. could lead to unnecessary alarms.*

If you use the averaging method, you can optionally specify how often Active Fiber Monitoring polls the cable to determine the baseline. This allows Active Fiber Monitoring to update the baseline less often than it polls the device for monitoring.

In order to prevent the theoretical possibility of slow clamping, you can set the baseline interval to a large value, so that the baseline average is only updated with the current reading (for example) once per day or once per hour.

As fiber attenuation can be affected by ambient temperature, take care if changing the baseline interval in environments with large daily temperature fluctuations.

**Example**

To set the baseline optical power to a moving average of the last 30 monitoring readings on eth1 and eth2, use the command:

```
awplus(config)# interface eth1-eth2
awplus(config-if)# fiber-monitoring baseline average 30
```

To calculate the baseline based on 12 values taken 24 hours (86400 seconds) apart, instead of using the monitoring interval, use the command:

```
awplus(config)# interface eth1-eth2
awplus(config-if)# fiber-monitoring baseline average 12
interval 86400
```

To set the baseline to its default, averaging the last 12 readings, use the command:

```
awplus(config)# interface eth1-eth2
awplus(config-if)# no fiber-monitoring baseline
```

**Related commands**

fiber-monitoring interval

fiber-monitoring sensitivity

**Command changes**

Version 5.4.8-0.2: **interval** parameter added

# fiber-monitoring enable

**Overview**

Use this command to enable active fiber monitoring on a fiber port. If the port can support fiber monitoring but does not have the correct SFP or fiber type installed, the configuration will be saved, and monitoring will commence when a supported SFP is inserted. Disabling and re-enabling fiber monitoring on a port resets the baseline calculation.

Use the **no** variants of this command to disable active fiber monitoring on the interface, or to remove all the configuration and state for the ports, respectively.

**Syntax**

```
fiber-monitoring enable
no fiber-monitoring enable
no fiber-monitoring
```

**Default**

Active fiber monitoring is disabled by default.

**Mode**

Interface Configuration mode for a fiber port

**Examples**

To enable active fiber monitoring on eth1 and eth2, use the commands:

```
awplus(config)# interface eth1-eth2
awplus(config-if)# fiber-monitoring enable
```

To disable fiber monitoring on the ports, use the commands:

```
awplus(config)# interface eth1-eth2
awplus(config-if)# no fiber-monitoring enable
```

To remove all fiber-monitoring configuration and state for the ports, use the commands:

```
awplus(config)# interface eth1-eth2
awplus(config-if)# no fiber-monitoring
```

**Related commands**

fiber-monitoring action

fiber-monitoring sensitivity

show system fiber-monitoring

# fiber-monitoring interval

**Overview**

Use this command to configure the fiber monitoring polling interval in seconds for the port. The optical power will be read every <interval> seconds and compared against the calculated threshold values to see if a log message or other action is required.

Use the **no** variant of this command to reset the polling interval to the default (5 seconds).

**Syntax**

```
fiber-monitoring interval <2-60>
no fiber-monitoring interval
```

| Parameter | Description |
|---|---|
| *<2-60>* | Optical power polling interval in seconds. |

**Default**

The interval is set to 5 seconds by default.

**Mode**

Interface configuration mode for a fiber port.

**Example**

To set the fiber monitoring polling interval for eth1 to 30 seconds, use the commands:

```
awplus(config)# interface eth1
awplus(config-if)# fiber-monitoring interval 30
```

To reset the fiber monitoring polling interval back to the default (5s), use the commands:

```
awplus(config)# interface eth1
awplus(config-if)# no fiber-monitoring interval
```

**Related commands**

fiber-monitoring baseline

show system fiber-monitoring

# fiber-monitoring sensitivity

**Overview** Use this command to configure the sensitivity of the alarm thresholds on the port for active fiber monitoring.

Use the **no** variant of this command to reset the sensitivity to the default.

**Syntax**

```
fiber-monitoring sensitivity (low|medium|high|highest|fixed
<25-65535>)|relative <0.01-10.0>
```

```
no fiber-monitoring sensitivity
```

| Parameter | Description |
|---|---|
| `low` | Low sensitivity (+/-2 dB) |
| `medium` | Medium sensitivity (1 dB) (default) |
| `high` | High sensitivity (the greater of 0.5 dB and 0.0025 mW) |
| `highest` | The highest sensitivity available: 0.0025mW |
| `fixed <25-65535>` | Fixed sensitivity at the specified level in 0.0001 mW. |
| `relative <0.01-10.0>` | Relative sensitivity at the specified level in dB. |

**Default** Medium sensitivity.

**Mode** User Exec/Privileged Exec

**Usage** A log message is generated and configured actions are taken if the received optical power drops below the baseline value by the sensitivity configured with this command.

The sensitivity can be configured to one of four pre-defined levels in decibels or to a fixed absolute delta in units of 0.0001mW. The alarm thresholds can be seen in the **show system fiber-monitoring** output. The maximum absolute sensitivity configurable is 0.0025 mW. Note that 0.0025 mW equates to a reduction of approximately 1dB at the maximum attenuation of an AT-SPLX10/1.

**Example** To set the fiber monitoring sensitivity for eth1 to a relative sensitivity of 0.1 dB, use the commands:

```
awplus(config)# interface eth1
awplus(config-if)# fiber-monitoring sensitivity relative 0.1
```

To reset the fiber monitoring sensitivity to the default (medium), use the commands:

```
awplus(config)# interface eth1
awplus(config-if)# no fiber-monitoring sensitivity
```

**Related commands** fiber-monitoring action

fiber-monitoring baseline

## show system fiber-monitoring

# show system fiber-monitoring

**Overview** Use this command to display settings and current status for Active Fiber Monitoring.

**Syntax** `show system fiber-monitoring`

**Mode** User Exec and Privileged Exec

**Example** To display configuration and status for active fiber monitoring on ports, use the command:

```
awplus# show system fiber-monitoring
```

**Output** Figure 9-2: Example output from **show system fiber-monitoring**

```
awplus#show sys fiber-monitoring
Fiber Monitoring Status
  Reading units 0.0001mW

Interface eth1
Status:           enabled
Supported:        Supported pluggable
Debugging:        disabled
Interval:         2 seconds
Sensitivity:      1.00dB
Baseline type:    average of last 35 values greater than 50
Status:
 Baseline value:   496
 Alarm threshold:  393
 Alarm:            no
 Last 12 Readings: 498 498 498 498 498 498 498 498 498 498 498 498
 Minimum reading: 486
 Maximum reading: 498

Interface eth2
Status:           enabled
Supported:        Supported pluggable
Debugging:        disabled
Interval:         2 seconds
Sensitivity:      1.00dB
Baseline type:    average of last 30 values greater than 50
Status:
 Baseline value:   0
 Alarm threshold:  0
 Alarm:            no
 Last 12 Readings: 0 0 0 0 0 0 0 0 0 0 0 0
 Minimum reading: 0
 Maximum reading: 0
```

Table 9-1: Parameters in the output from **show system fiber-monitoring**

| Parameter | Description |
|---|---|
| `Reading units` | The units for optical power readings in the rest of the display, e.g. 0.0001mW. |
| `Status` | Whether active fiber monitoring is enabled or disabled for this port. |
| `Supported` | Whether the pluggable inserted in this port supports active fiber monitoring. |
| `Debugging` | Whether debugging of active fiber monitoring is enabled or disabled for this port. |
| `Interval` | The configured interval between readings of optical power on this port. |
| `Sensitivity` | The configured sensitivity threshold for optical power changes on this port. |
| `Baseline type` | How the baseline optical power level is calculated: either the average of the specified number of previous readings or a specified fixed value in 0.0001mW. |
| `Status` | Current values for the following parameters. |
| `Baseline value` | The baseline value, calculated according to the configured baseline method, in 0.0001mW. |
| `Alarm threshold` | The current threshold for a change in optical power, calculated according to the configured sensitivity method, that will result in action. |
| `Alarm` | Whether the optical power at the most recent reading fallen below the threshold. |
| `Last 12 readings` | The last 12 optical power values measured, in 0.0001mW, with oldest value first. |
| `Minimum reading` | The lowest optical power reading since the fiber pluggable was last inserted, or since active fiber monitoring was last enabled on the port. |
| `Maximum reading` | The highest optical power reading since the fiber pluggable was last inserted, or since active fiber monitoring was last enabled on the port. |

**Related commands**

debug fiber-monitoring

fiber-monitoring action

fiber-monitoring baseline

fiber-monitoring enable

fiber-monitoring interval

fiber-monitoring sensitivity

# show system pluggable

**Overview** This command displays **brief** pluggable transceiver information showing the pluggable type, the pluggable serial number, and the pluggable port on the device. Different types of pluggable transceivers are supported in different models of device. See your Allied Telesis dealer for more information about the models of pluggables that your device supports.

**Syntax** `show system pluggable [<port-list>]`

| Parameter | Description |
|---|---|
| *<port-list>* | The ports to display information about. The port list can be:<br>• a switch port (e.g. eth1)<br>• a continuous range of ports separated by a hyphen (e.g. porteth1-eth2)<br>• a comma-separated list of ports and port ranges (e.g. eth1,eth2) |

**Mode** User Exec and Privileged Exec

**Example** To display brief information about all installed pluggable transceivers, use the command:

```
awplus# show system pluggable
```

**Output** Figure 9-3: Example output from **show system pluggable**

```
awplus#show system pluggable
System Pluggable Information

Port    Vendor           Device           Serial Number    Datecode Type
---------------------------------------------------------------------------
eth1  ATI              AT-SPSX          A03240R151300867 15032801 1000BASE-SX
eth2  ATI              AT-SPSX          A03240R111800076 15032801 1000BASE-SX
---------------------------------------------------------------------------
```

**Table 10:** Parameters in the output from the **show system pluggable** command

| Parameter | Description |
|---|---|
| Port | Specifies the port number for the installed pluggable transceiver. |
| Vendor | Specifies the vendor's name for the installed pluggable transceiver. |
| Device | Specifies the device name for the installed pluggable transceiver. |

**Table 10:** Parameters in the output from the **show system pluggable** command (cont.)

| Parameter | Description |
|---|---|
| `Serial Number` | Specifies the serial number for the installed pluggable transceiver. |
| `Datecode` | Specifies the manufacturing datecode for the installed pluggable transceiver. Checking the manufacturing datecode with the vendor may be useful when determining Laser Diode aging issues. For more information, see "Troubleshooting Fiber and Pluggable Issues" in the "Pluggables and Cabling" Feature Overview and Configuration Guide. |
| `Type` | Specifies the device type for the installed pluggable transceiver. |

**Related commands**

show system environment

show system pluggable detail

show system pluggable diagnostics

# show system pluggable detail

**Overview** This command displays detailed pluggable transceiver information showing the pluggable type, the pluggable serial number, and the pluggable port on the device. Different types of pluggable transceivers are supported in different models of device. See your Allied Telesis dealer for more information about the models of pluggables that your device supports.

For information on filtering and saving command output, see the "Getting Started with AlliedWare Plus" Feature Overview and Configuration Guide.

**Syntax**

```
show system pluggable [<port-list>] detail
```

| Parameter | Description |
|---|---|
| *<port-list>* | The ports to display information about. The port list can be:<br>• a switch port (e.g. eth1)<br>• a continuous range of ports separated by a hyphen (e.g. porteth1-eth2)<br>• a comma-separated list of ports and port ranges (e.g. eth1,eth2) |

**Mode** User Exec and Privileged Exec

**Usage notes** In addition to the information about pluggable transceivers displayed using the show system pluggable command (port, manufacturer, serial number, manufacturing datecode, and type information), the **show system pluggable detail** command displays the following information:

- **SFP Laser Wavelength**: Specifies the laser wavelength of the installed pluggable transceiver
- **Single mode Fiber**: Specifies the link length supported by the pluggable transceiver using single mode fiber
- **OM1 (62.5µ m) Fiber**: Specifies the link length, in meters (m) or kilometers (km) supported by the pluggable transceiver using 62.5 micron multi-mode fiber.
- **OM2 (50µ m) Fiber**: Specifies the link length (in meters or kilometers) supported by the pluggable transceiver using 50 micron multi-mode fiber.
- **Diagnostic Calibration**: Specifies whether the pluggable transceiver supports DDM or DOM Internal or External Calibration.
  - **Internal** is displayed if the pluggable transceiver supports DDM or DOM Internal Calibration.
  - **External** is displayed if the pluggable transceiver supports DDM or DOM External Calibration.
  - a dash (-) is displayed if neither Internal Calibration or External Calibration is supported.

- **Power Monitoring**: Displays the received power measurement type, which can be either **OMA**(Optical Module Amplitude) or **Avg**(Average Power) measured in µW.

***NOTE:*** *For parameters that are not supported or not specified, a hyphen is displayed instead.*

**Example** To display detailed information about the pluggable transceivers installed in a particular port on the device, use a command like:

```
awplus# show system pluggable eth1 detail
```

To display detailed information about all the pluggable transceivers installed on the device, use the command:

```
awplus# show system pluggable detail
```

**Output** Figure 9-4: Example output from **show system pluggable detail** for a port

```
awplus#show system pluggable eth1 detail
System Pluggable Information Detail
eth1
==========
Vendor Name:              ATI
Device Name:        AT-SPSX
Device Revision:          A
Device Type:              1000BASE-SX
Serial Number:            A02420N0607J0023
Manufacturing Datecode:   060704
SFP Laser Wavelength:     850nm
Link Length Supported
  Single Mode Fiber :     -
  OM1 (62.5um) Fiber:     150m
  OM2 (50um) Fiber  :     300m
  OM3 (50um) Fiber  :     -
Diagnostic Calibration:   External
Power Monitoring:         Average
```

Table 9-1: Parameters in the output from **show system pluggable detail**

| Parameter | Description |
|---|---|
| Port | Specifies the port the pluggable transceiver is installed in. |
| Vendor Name | Specifies the vendor's name for the installed pluggable transceiver. |
| Device Name | Specifies the device name for the installed pluggable transceiver. |
| Device Revision | Specifies the hardware revision code for the pluggable transceiver. This may be useful for troubleshooting because different devices may support different pluggable transceiver revisions. |

Table 9-1: Parameters in the output from **show system pluggable detail** (cont.)

| Parameter | Description |
|---|---|
| `Device Type` | Specifies the device type for the installed pluggable transceiver. |
| `Serial Number` | Specifies the serial number for the installed pluggable transceiver. |
| `Manufacturing Datecode` | Specifies the manufacturing datecode for the installed pluggable transceiver. Checking the manufacturing datecode with the vendor may be useful when determining Laser Diode aging issues. For more information, see "Troubleshooting Fiber and Pluggable Issues" in the "Pluggables and Cabling" Feature Overview and Configuration Guide. |
| `SFP Laser Wavelength` | Specifies the laser wavelength of the installed pluggable transceiver. |
| `Single Mode Fiber` | Specifies the link length supported by the pluggable transceiver using single mode fiber. |
| `OM1 (62.5um) Fiber` | Specifies the link length (in µm - micron) supported by the pluggable transceiver using 62.5 micron multi-mode fiber. |
| `OM2 (50um) Fiber` | Specifies the link length (in µm - micron) supported by the pluggable transceiver using 50 micron multi-mode fiber. |
| `Diagnostic Calibration` | Specifies whether the pluggable transceiver supports DDM or DOM Internal or External Calibration:<br>**Internal** is displayed if the pluggable transceiver supports DDM or DOM Internal Calibration.<br>**External** is displayed if the pluggable transceiver supports DDM or DOM External Calibration.<br>**-** is displayed if neither Internal Calibration or External Calibration is supported. |
| `Power Monitoring` | Displays the received power measurement type, which can be either **OMA** (Optical Module Amplitude) or **Avg** (Average Power) measured in µW. |

**Related commands**

show system environment

show system pluggable

show system pluggable diagnostics

# show system pluggable diagnostics

**Overview** This command displays diagnostic information about pluggable transceivers that support Digital Diagnostic Monitoring (DDM).

Different types of pluggable transceivers are supported in different models of device. See your device's Datasheet for more information about the models of pluggables that your device supports.

For information on filtering and saving command output, see the "Getting Started with AlliedWare Plus" Feature Overview and Configuration Guide.

**Syntax**

```
show system pluggable [<port-list>] diagnostics
```

| Parameter | Description |
|---|---|
| *<port-list>* | The ports to display information about. The port list can be:<br>• a switch port (e.g. eth1)<br>• a continuous range of ports separated by a hyphen (e.g. porteth1-eth2)<br>• a comma-separated list of ports and port ranges (e.g. eth1,eth2) |

**Mode** User Exec and Privileged Exec

**Usage notes** Diagnostic monitoring features allow you to monitor real-time parameters of the pluggable transceiver, such as optical output power, optical input power, temperature, laser bias current, and transceiver supply voltage. Additionally, RX LOS (Loss of Signal) is shown when the received optical level is below a preset threshold. Monitor these parameters to check on the health of all transceivers, selected transceivers or a specific transceiver installed in a device.

**Examples** To display detailed information about all pluggable transceivers installed on a standalone device, use the command:

```
awplus# show system pluggable diagnostics
```

**Output** Figure 9-5: Example output from the **show system pluggable diagnostics** command on a device

```
awplus#show system pluggable diagnostics

System Pluggable Information Diagnostics

eth1          Status             Alarms                    Warnings
                  Reading   Alarm     Max     Min   Warning     Max     Min
Temp: (Degrees C)  44.871       -  100.00  -40.00         -  95.000  -30.00
Vcc: (Volts)       3.3043       -  3.4650  3.1350         -  3.4000  3.2000
Tx Bias: (mA)       3.468       -  13.264   0.000         -  10.264   0.264
Tx Power: (mW)     0.2376       -  0.7943  0.0562         -  0.6310  0.0708
Rx Power: (mW)     0.2104       -  1.0000  0.0126         -  0.7943  0.0200
Rx LOS:             Rx Up

...
```

**Table 10:** Parameters in the output from the **show system pluggables diagnostics** command

| Parameter | Description |
|---|---|
| `Temp (Degrees C)` | Shows the temperature inside the transceiver. |
| `Vcc (Volts)` | Shows voltage supplied to the transceiver. |
| `Tx Bias (mA)` | Shows current to the Laser Diode in the transceiver. |
| `Tx Power (mW)` | Shows the amount of light transmitted from the transceiver. |
| `Rx Power (mW)` | Shows the amount of light received in the transceiver. |
| `Rx LOS` | Rx Loss of Signal. This indicates whether:<br>• light is being received (Rx Up) and therefore the link is up, or<br>• light is not being received (Rx Down) and therefore the link is down |

**Related commands**

show system environment

show system pluggable

show system pluggable detail

# 10 Logging Commands

## Introduction

**Overview** This chapter provides an alphabetical reference of commands used to configure logging. See the Logging Feature Overview and Configuration Guide for more information about the different types of log and how to filter log messages.

**Command List**


- "clear exception log" on page 349
- "clear log" on page 350
- "clear log buffered" on page 351
- "clear log external" on page 352
- "clear log permanent" on page 353
- "connection-log events" on page 354
- "copy buffered-log" on page 355
- "copy permanent-log" on page 356
- "default log buffered" on page 357
- "default log console" on page 358
- "default log email" on page 359
- "default log external" on page 360
- "default log host" on page 361
- "default log monitor" on page 362
- "default log permanent" on page 363
- "log buffered" on page 364
- "log buffered (filter)" on page 365
- "log buffered exclude" on page 368
- "log buffered size" on page 371

- "log console" on page 372
- "log console (filter)" on page 373
- "log console exclude" on page 376
- "log date-format" on page 379
- "log email" on page 380
- "log email (filter)" on page 381
- "log email exclude" on page 384
- "log email time" on page 387
- "log external" on page 389
- "log external (filter)" on page 391
- "log external exclude" on page 394
- "log external rotate" on page 397
- "log external size" on page 399
- "log facility" on page 400
- "log host" on page 402
- "log host (filter)" on page 404
- "log host exclude" on page 407
- "log host source" on page 410
- "log host startup-delay" on page 411
- "log host time" on page 413
- "log monitor (filter)" on page 415
- "log monitor exclude" on page 418
- "log permanent" on page 421
- "log permanent (filter)" on page 422
- "log permanent exclude" on page 425
- "log permanent size" on page 428
- "log-rate-limit nsm" on page 429
- "log trustpoint" on page 430
- "log url-requests" on page 431
- "show connection-log events" on page 432
- "show counter log" on page 433
- "show exception log" on page 434
- "show log" on page 435
- "show log config" on page 437
- "show log external" on page 439

- "show log permanent" on page 440
- "show running-config log" on page 441
- "unmount" on page 442

# clear exception log

**Overview** This command resets the contents of the exception log, but does not remove the associated core files.

**Syntax** `clear exception log`

**Mode** Privileged Exec

**Example** `awplus# clear exception log`

# clear log

**Overview** This command removes the contents of the buffered and permanent logs.

**Syntax**

```
clear log
```

**Mode** Privileged Exec

**Example** To delete the contents of the buffered and permanent log use the command:

```
awplus# clear log
```

**Related commands**

clear log buffered

clear log permanent

show log

# clear log buffered

**Overview** This command removes the contents of the buffered log.

**Syntax**

```
clear log buffered
```

**Mode** Privileged Exec

**Example** To delete the contents of the buffered log use the following commands:

```
awplus# clear log buffered
```

**Related commands**

default log buffered

log buffered

log buffered (filter)

log buffered size

log buffered exclude

show log

show log config

# clear log external

**Overview**

Use this command to delete the external log file from the SD card or USB storage device it is stored on.

Use this command to delete the external log file from the SD card it is stored on.

Use this command to delete the external log file from the USB storage device it is stored on.

If the external log is rotating between multiple files, this command deletes all those files, not just the most recent one.

**Syntax**

```
clear log external
```

**Mode**

Privileged Exec

**Example**

To delete the external log file, use the command:

```
awplus# clear log external
```

**Related commands**

default log external

log external

log external (filter)

log external exclude

log external rotate

log external size

show log config

show log external

unmount

**Command changes**

Version 5.4.7-1.1: command added

# clear log permanent

**Overview** This command removes the contents of the permanent log.

**Syntax**

```
clear log permanent
```

**Mode** Privileged Exec

**Example** To delete the contents of the permanent log use the following commands:

```
awplus# clear log permanent
```

**Related commands**

default log permanent

log permanent

log permanent (filter)

log permanent exclude

log permanent size

show log config

show log permanent

# connection-log events

**Overview**

Use this command to enable extra logging for indicating the start and the end of connections passing through the firewall.

Use the **no** variant of this command to turn off the extra logging of connections passing through the firewall.

**Syntax**

```
connection-log events [new|end|all]
no connection-log events [new|end|all]
```

| Parameter | Description |
|---|---|
| new | New connection |
| end | Connections closed |
| all | All new connections and connections closed. Default. |

**Default**

Connection logging is not enabled by default.

**Mode**

Global Configuration.

**Usage notes**

There are two types of messages you can log: new connections and connections that ended. You can control the amount of messages you log by choosing to log either type of message or all of the message types.

Messages contain the following information:

- time
- source and destination addresses (NATed and unNATed)
- protocol
- source and destination ports (NATed and unNATed)
- bytes and packets passed (found in the connection end message)

**Example**

To log all of the new connections and all of the closed connections, use the commands:

```
awplus# configure terminal
awplus(config)# connection-log events all
```

**Related commands**

show connection-log events

**Command changes**

Version 5.4.7-1.1: command added.

# copy buffered-log

**Overview** Use this command to copy the buffered log to an internal or external destination.

**Syntax**

```
copy buffered-log <destination-name>
```

| Parameter | Description |
|---|---|
| *<destination-name>* | The filename and path for the destination file. See Introduction on page 142 for valid syntax. |

**Mode** Privileged Exec

**Example** To copy the buffered log file into a folder in Flash named "buffered-log" and name the file "buffered-log.log", use the command:

```
awplus# copy buffered-log flash:/buffered-log/buffered-log.log
```

To copy the buffered log file onto an SD card and name the file "buffered-log.log", use the command:

```
awplus# copy buffered-log card:/buffered-log.log
```

To copy the buffered log file onto a USB storage device and name the file "buffered-log.log", use the command:

```
awplus# copy buffered-log usb:/buffered-log.log
```

**Related commands**

log buffered

show file systems

show log

**Command changes** Version 5.4.7-1.1: command added

# copy permanent-log

**Overview** Use this command to copy the permanent log to an internal or external destination.

**Syntax** `copy permanent-log <destination-name>`

| Parameter | Description |
|---|---|
| *<destination-name>* | The filename and path for the destination file. See Introduction on page 142 for valid syntax. |

**Mode** Privileged Exec

**Example** To copy the permanent log file into a folder in Flash named "perm-log" and name the file "permanent-log.log", use the command:

```
awplus# copy permanent-log flash:/perm-log/permanent-log.log
```

To copy the permanent log file onto an SD card and name the file "permanent-log.log", use the command:

```
awplus# copy permanent-log card:/permanent-log.log
```

To copy the permanent log file onto a USB storage device and name the file "permanent-log.log", use the command:

```
awplus# copy permanent-log usb:/permanent-log.log
```

**Related commands** log permanent

show file systems

show log permanent

**Command changes** Version 5.4.7-1.1: command added

# default log buffered

**Overview** This command restores the default settings for the buffered log stored in RAM. By default the size of the buffered log is 50 kB and it accepts messages with the severity level of "warnings" and above.

**Syntax**

```
default log buffered
```

**Default** The buffered log is enabled by default.

**Mode** Global Configuration

**Example** To restore the buffered log to its default settings use the following commands:

```
awplus# configure terminal
awplus(config)# default log buffered
```

**Related commands**

clear log buffered

log buffered

log buffered (filter)

log buffered size

log buffered exclude

show log

show log config

# default log console

**Overview** This command restores the default settings for log messages sent to the terminal when a log console command is issued. By default all messages are sent to the console when a **log console** command is issued.

**Syntax**

```
default log console
```

**Mode** Global Configuration

**Example** To restore the log console to its default settings use the following commands:

```
awplus# configure terminal
awplus(config)# default log console
```

**Related commands**

log console

log console (filter)

log console exclude

show log config

# default log email

**Overview** This command restores the default settings for log messages sent to an email address. By default no filters are defined for email addresses. Filters must be defined before messages will be sent. This command also restores the remote syslog server time offset value to local (no offset).

**Syntax**

```
default log email <email-address>
```

| Parameter | Description |
|---|---|
| *<email-address>* | The email address to send log messages to |

**Mode** Global Configuration

**Example** To restore the default settings for log messages sent to the email address `admin@alliedtelesis.com` use the following commands:

```
awplus# configure terminal
awplus(config)# default log email admin@alliedtelesis.com
```

**Related commands**

log email

log email (filter)

log email exclude

log email time

show log config

# default log external

**Overview**

Use this command to restore the default settings for the external log. By default, the size of the external log is 50 kB, it rotates through 1 additional file, and it accepts messages with a severity level of notices and above.

Note that this command does not clear the configured filename for the external log.

**Syntax**

```
default log external
```

**Mode**

Global Configuration

**Example**

To restore the default settings for the external log, use the commands:

```
awplus# configure terminal
awplus(config)# default log external
```

**Related commands**

clear log external

log external

log external (filter)

log external exclude

log external rotate

log external size

show log config

show log external

unmount

**Command changes**

Version 5.4.7-1.1: command added

# default log host

**Overview** This command restores the default settings for log sent to a remote syslog server. By default no filters are defined for remote syslog servers. Filters must be defined before messages will be sent. This command also restores the remote syslog server time offset value to local (no offset).

**Syntax**

```
default log host <ip-addr>
```

| Parameter | Description |
|---|---|
| *<ip-addr>* | The IP address of a remote syslog server |

**Mode** Global Configuration

**Example** To restore the default settings for messages sent to the remote syslog server with IP address `10.32.16.21` use the following commands:

```
awplus# configure terminal
awplus(config)# default log host 10.32.16.21
```

**Related commands**

log host

log host (filter)

log host exclude

log host source

log host time

show log config

# default log monitor

**Overview** This command restores the default settings for log messages sent to the terminal when a terminal monitor command is used.

**Syntax**

```
default log monitor
```

**Default** All messages are sent to the terminal when a terminal monitor command is used.

**Mode** Global Configuration

**Example** To restore the log monitor to its default settings use the following commands:

```
awplus# configure terminal
awplus(config)# default log monitor
```

**Related commands**

log monitor (filter)

log monitor exclude

show log config

terminal monitor

# default log permanent

**Overview** This command restores the default settings for the permanent log stored in NVS. By default, the size of the permanent log is 50 kB and it accepts messages with the severity level of `warnings` and above.

**Syntax**

```
default log permanent
```

**Default** The permanent log is enabled by default.

**Mode** Global Configuration

**Example** To restore the permanent log to its default settings use the following commands:

```
awplus# configure terminal
awplus(config)# default log permanent
```

**Related commands**

clear log permanent

log permanent

log permanent (filter)

log permanent exclude

log permanent size

show log config

show log permanent

# log buffered

**Overview**

This command configures the device to store log messages in RAM. Messages stored in RAM are not retained on the device over a restart. Once the buffered log reaches its configured maximum allowable size old messages will be deleted to make way for new ones.

**Syntax**

```
log buffered
no log buffered
```

**Default**

The buffered log is configured by default.

**Mode**

Global Configuration

**Examples**

To configured the device to store log messages in RAM use the following commands:

```
awplus# configure terminal
awplus(config)# log buffered
```

To configure the device to not store log messages in a RAM buffer use the following commands:

```
awplus# configure terminal
awplus(config)# no log buffered
```

**Related commands**

clear log buffered

copy buffered-log

default log buffered

log buffered (filter)

log buffered size

log buffered exclude

show log

show log config

# log buffered (filter)

**Overview** Use this command to create a filter to select messages to be sent to the buffered log. Selection can be based on the priority/ severity of the message, the program that generated the message, the logging facility used, a sub-string within the message or a combination of some or all of these.

The **no** variant of this command removes the corresponding filter, so that the specified messages are no longer sent to the buffered log.

**Syntax**

```
log buffered [level <level>] [program <program-name>] [facility
<facility>] [msgtext <text-string>]
```

```
no log buffered [level <level>] [program <program-name>]
[facility <facility>] [msgtext <text-string>]
```

| Parameter | Description | |
|---|---|---|
| `level` | Filter messages to the buffered log by severity level. | |
| *<level>* | The minimum severity of message to send to the buffered log. The level can be specified as one of the following numbers or level names, where 0 is the highest severity and 7 is the lowest severity: | |
| | `0\|emergencies` | System is unusable |
| | `1\|alerts` | Action must be taken immediately |
| | `2\|critical` | Critical conditions |
| | `3\|errors` | Error conditions |
| | `4\|warnings` | Warning conditions |
| | `5\|notices` | Normal, but significant, conditions |
| | `6\|informational` | Informational messages |
| | `7\|debugging` | Debug-level messages |
| `program` | Filter messages to the buffered log by program. Include messages from a specified program in the buffered log. | |
| *<program-name>* | The name of a program to log messages from. You can enter either one of the following predefined program names (depending on your device model), or another program name that you find in the log output. The pre-defined names are not case sensitive but other program names from the log output are. | |
| | `rip` | Routing Information Protocol (RIP) |
| | `ripng` | Routing Information Protocol - next generation (RIPng) |
| | `ospf` | Open Shortest Path First (OSPF) |
| | `ospfv3` | Open Shortest Path First (OSPF) version 3 (OSPFv3) |
| | `bgp` | Border Gateway Protocol (BGP) |
| | `rsvp` | Resource Reservation Protocol (RSVP) |
| | `pim-dm` | Protocol Independent Multicast - Dense Mode (PIM-DM) |

| Parameter | Description | |
|---|---|---|
| | `pim-sm` | Protocol Independent Multicast - Sparse Mode (PIM-SM) |
| | `pim-smv6` | PIM-SM version 6 (PIM-SMv6) |
| | `dot1x` | IEEE 802.1X Port-Based Access Control |
| | `lacp` | Link Aggregation Control Protocol (LACP) |
| | `stp` | Spanning Tree Protocol (STP) |
| | `rstp` | Rapid Spanning Tree Protocol (RSTP) |
| | `mstp` | Multiple Spanning Tree Protocol (MSTP) |
| | `imi` | Integrated Management Interface (IMI) |
| | `imish` | Integrated Management Interface Shell (IMISH) |
| | `epsr` | Ethernet Protection Switched Rings (EPSR) |
| | `irdp` | ICMP Router Discovery Protocol (IRDP) |
| | `rmon` | Remote Monitoring |
| | `loopprot` | Loop Protection |
| | `poe` | Power-inline (Power over Ethernet) |
| | `dhcpsn` | DHCP snooping (DHCPSN) |
| `facility` | Filter messages to the buffered log by syslog facility. | |
| *<facility>* | Specify one of the following syslog facilities to include messages from in the buffered log: | |
| | `kern` | Kernel messages |
| | `user` | Random user-level messages |
| | `mail` | Mail system |
| | `daemon` | System daemons |
| | `auth` | Security/authorization messages |
| | `syslog` | Messages generated internally by syslogd |
| | `lpr` | Line printer subsystem |
| | `news` | Network news subsystem |
| | `uucp` | UUCP subsystem |
| | `cron` | Clock daemon |
| | `authpriv` | Security/authorization messages (private) |
| | `ftp` | FTP daemon |
| `msgtext` | Select messages containing a certain text string. | |
| *<text-string>* | A text string to match (maximum 128 characters). This is case sensitive, and must be the last text on the command line. | |

**Default** By default the buffered log has a filter to select messages whose severity level is "notices (5)" or higher. This filter may be removed using the **no** variant of this command.

**Mode** Global Configuration

**Examples** To add a filter to send all messages containing the text "Bridging initialization" to the buffered log, use the following commands:

```
awplus# configure terminal
awplus(config)# log buffered msgtext Bridging initialization
```

To remove a filter that sends all messages containing the text "Bridging initialization" to the buffered log, use the following commands:

```
awplus# configure terminal
awplus(config)# no log buffered msgtext Bridging initialization
```

**Related commands**

clear log buffered

default log buffered

log buffered

log buffered size

log buffered exclude

show log

show log config

# log buffered exclude

**Overview** Use this command to exclude specified log messages from the buffered log. You can exclude messages on the basis of:

- the priority/severity of the message
- the program that generated the message
- the logging facility used
- a sub-string within the message, or
- a combination of some or all of these.

Use the **no** variant of this command to stop excluding the specified messages.

**Syntax**

```
log buffered exclude [level <level>] [program <program-name>]
[facility <facility>] [msgtext <text-string>]
```

```
no log buffered exclude [level <level>] [program
<program-name>] [facility <facility>] [msgtext <text-string>]
```

| Parameter | Description | |
|---|---|---|
| `level` | Exclude messages of the specified severity level. | |
| *<level>* | The severity level to exclude. The level can be specified as one of the following numbers or level names, where 0 is the highest severity and 7 is the lowest severity: | |
| | `0\|emergencies` | System is unusable |
| | `1\|alerts` | Action must be taken immediately |
| | `2\|critical` | Critical conditions |
| | `3\|errors` | Error conditions |
| | `4\|warnings` | Warning conditions |
| | `5\|notices` | Normal, but significant, conditions |
| | `6\|informational` | Informational messages |
| | `7\|debugging` | Debug-level messages |
| `program` | Exclude messages from a specified program. | |
| *<program-name>* | The name of a program. You can enter either one of the following predefined program names (depending on your device model), or another program name that you find in the log output. The pre-defined names are not case sensitive but other program names from the log output are. | |
| | `rip` | Routing Information Protocol (RIP) |
| | `ripng` | Routing Information Protocol - next generation (RIPng) |
| | `ospf` | Open Shortest Path First (OSPF) |
| | `ospfv3` | Open Shortest Path First (OSPF) version 3 (OSPFv3) |
| | `bgp` | Border Gateway Protocol (BGP) |

| Parameter | Description | |
|---|---|---|
| | `rsvp` | Resource Reservation Protocol (RSVP) |
| | `pim-dm` | Protocol Independent Multicast - Dense Mode (PIM-DM) |
| | `pim-sm` | Protocol Independent Multicast - Sparse Mode (PIM-SM) |
| | `pim-smv6` | PIM-SM version 6 (PIM-SMv6) |
| | `dot1x` | IEEE 802.1X Port-Based Access Control |
| | `lacp` | Link Aggregation Control Protocol (LACP) |
| | `stp` | Spanning Tree Protocol (STP) |
| | `rstp` | Rapid Spanning Tree Protocol (RSTP) |
| | `mstp` | Multiple Spanning Tree Protocol (MSTP) |
| | `imi` | Integrated Management Interface (IMI) |
| | `imish` | Integrated Management Interface Shell (IMISH) |
| | `epsr` | Ethernet Protection Switched Rings (EPSR) |
| | `irdp` | ICMP Router Discovery Protocol (IRDP) |
| | `rmon` | Remote Monitoring |
| | `loopprot` | Loop Protection |
| | `poe` | Power-inline (Power over Ethernet) |
| | `dhcpsn` | DHCP snooping (DHCPSN) |
| `facility` | Exclude messages from a syslog facility. | |
| *<facility>* | Specify one of the following syslog facilities to exclude messages from: | |
| | `kern` | Kernel messages |
| | `user` | Random user-level messages |
| | `mail` | Mail system |
| | `daemon` | System daemons |
| | `auth` | Security/authorization messages |
| | `syslog` | Messages generated internally by syslogd |
| | `lpr` | Line printer subsystem |
| | `news` | Network news subsystem |
| | `uucp` | UUCP subsystem |
| | `cron` | Clock daemon |
| | `authpriv` | Security/authorization messages (private) |
| | `ftp` | FTP daemon |
| `msgtext` | Exclude messages containing a certain text string. | |
| *<text-string>* | A text string to match (maximum 128 characters). This is case sensitive, and must be the last text on the command line. | |

**Default** No log messages are excluded

**Mode** Global configuration

**Example** To remove messages that contain the string “example of irrelevant message”, use the following commands:

```
awplus# configure terminal
awplus(config)# log buffered exclude msgtext example of
irrelevant message
```

**Related commands**

clear log buffered

default log buffered

log buffered

log buffered (filter)

log buffered size

show log

show log config

# log buffered size

**Overview**

This command configures the amount of memory that the buffered log is permitted to use. Once this memory allocation has been filled old messages will be deleted to make room for new messages.

Use the **no** variant of this command to return to the default.

**Syntax**

```
log buffered size <50-250>
no log buffered size
```

| Parameter | Description |
|---|---|
| *<50-250>* | Size of the RAM log in kilobytes |

**Default**

50 kilobytes

**Mode**

Global Configuration

**Example**

To allow the buffered log to use up to 100 kilobytes of RAM, use the commands:

```
awplus# configure terminal
awplus(config)# log buffered size 100
```

To return to the default value, use the commands:

```
awplus# configure terminal
awplus(config)# no log buffered size
```

**Related commands**

clear log buffered

copy buffered-log

default log buffered

log buffered

log buffered (filter)

log buffered exclude

show log

show log config

# log console

**Overview**

This command configures the device to send log messages to consoles. The console log is configured by default to send messages to the device's main console port.

Use the **no** variant of this command to configure the device not to send log messages to consoles.

**Syntax**

```
log console
no log console
```

**Mode**

Global Configuration

**Examples**

To configure the device to send log messages use the following commands:

```
awplus# configure terminal
awplus(config)# log console
```

To configure the device not to send log messages in all consoles use the following commands:

```
awplus# configure terminal
awplus(config)# no log console
```

**Related commands**

default log console

log console (filter)

log console exclude

show log config

# log console (filter)

**Overview** This command creates a filter to select messages to be sent to all consoles when the **log console** command is given. Selection can be based on the priority/severity of the message, the program that generated the message, the logging facility used, a sub-string within the message or a combination of some or all of these.

**Syntax**

```
log console [level <level>] [program <program-name>] [facility
<facility>] [msgtext <text-string>]
```

```
no log console [level <level>] [program <program-name>]
[facility <facility>] [msgtext <text-string>]
```

| Parameter | Description | |
|---|---|---|
| `level` | Filter messages by severity level. | |
| *<level>* | The minimum severity of message to send. The level can be specified as one of the following numbers or level names, where 0 is the highest severity and 7 is the lowest severity: | |
| | `0\|emergencies` | System is unusable |
| | `1\|alerts` | Action must be taken immediately |
| | `2\|critical` | Critical conditions |
| | `3\|errors` | Error conditions |
| | `4\|warnings` | Warning conditions |
| | `5\|notices` | Normal, but significant, conditions |
| | `6\|informational` | Informational messages |
| | `7\|debugging` | Debug-level messages |
| `program` | Filter messages by program. Include messages from a specified program. | |
| *<program-name>* | The name of a program to log messages from. You can enter either one of the following predefined program names (depending on your device model), or another program name that you find in the log output. The pre-defined names are not case sensitive but other program names from the log output are. | |
| | `rip` | Routing Information Protocol (RIP) |
| | `ripng` | Routing Information Protocol - next generation (RIPng) |
| | `ospf` | Open Shortest Path First (OSPF) |
| | `ospfv3` | Open Shortest Path First (OSPF) version 3 (OSPFv3) |
| | `bgp` | Border Gateway Protocol (BGP) |
| | `rsvp` | Resource Reservation Protocol (RSVP) |
| | `pim-dm` | Protocol Independent Multicast - Dense Mode (PIM-DM) |
| | `pim-sm` | Protocol Independent Multicast - Sparse Mode (PIM-SM) |
| | `pim-smv6` | PIM-SM version 6 (PIM-SMv6) |

| Parameter | Description | |
|---|---|---|
| | `dot1x` | IEEE 802.1X Port-Based Access Control |
| | `lacp` | Link Aggregation Control Protocol (LACP) |
| | `stp` | Spanning Tree Protocol (STP) |
| | `rstp` | Rapid Spanning Tree Protocol (RSTP) |
| | `mstp` | Multiple Spanning Tree Protocol (MSTP) |
| | `imi` | Integrated Management Interface (IMI) |
| | `imish` | Integrated Management Interface Shell (IMISH) |
| | `epsr` | Ethernet Protection Switched Rings (EPSR) |
| | `irdp` | ICMP Router Discovery Protocol (IRDP) |
| | `rmon` | Remote Monitoring |
| | `loopprot` | Loop Protection |
| | `poe` | Power-inline (Power over Ethernet) |
| | `dhcpsn` | DHCP snooping (DHCPSN) |
| `facility` | Filter messages by syslog facility. | |
| *<facility>* | Specify one of the following syslog facilities to include messages from: | |
| | `kern` | Kernel messages |
| | `user` | Random user-level messages |
| | `mail` | Mail system |
| | `daemon` | System daemons |
| | `auth` | Security/authorization messages |
| | `syslog` | Messages generated internally by syslogd |
| | `lpr` | Line printer subsystem |
| | `news` | Network news subsystem |
| | `uucp` | UUCP subsystem |
| | `cron` | Clock daemon |
| | `authpriv` | Security/authorization messages (private) |
| | `ftp` | FTP daemon |
| `msgtext` | Select messages containing a certain text string. | |
| *<text-string>* | A text string to match (maximum 128 characters). This is case sensitive, and must be the last text on the command line. | |

**Default** By default the console log has a filter to select messages whose severity level is `critical` or higher. This filter may be removed using the **no** variant of this command. This filter may be removed and replaced by filters that are more selective.

**Mode** Global Configuration

**Examples** To create a filter to send all messages containing the text “Bridging initialization” to console instances where the **log console** command has been entered, use the following commands:

```
awplus# configure terminal
awplus(config)# log console msgtext "Bridging initialization"
```

To remove a default filter that includes sending **critical**, **alert** and **emergency** level messages to the console, use the following commands:

```
awplus# configure terminal
awplus(config)# no log console level critical
```

**Related commands**

default log console

log console

log console exclude

show log config

# log console exclude

**Overview** Use this command to prevent specified log messages from being sent to the console, when console logging is turned on. You can exclude messages on the basis of:

- the priority/severity of the message
- the program that generated the message
- the logging facility used
- a sub-string within the message, or
- a combination of some or all of these.

Use the **no** variant of this command to stop excluding the specified messages.

**Syntax**

```
log console exclude [level <level>] [program <program-name>]
[facility <facility>] [msgtext <text-string>]
```

```
no log console exclude [level <level>] [program <program-name>]
[facility <facility>] [msgtext <text-string>]
```

| Parameter | Description | |
|---|---|---|
| `level` | Exclude messages of the specified severity level. | |
| *<level>* | The severity level to exclude. The level can be specified as one of the following numbers or level names, where 0 is the highest severity and 7 is the lowest severity: | |
| | `0\|emergencies` | System is unusable |
| | `1\|alerts` | Action must be taken immediately |
| | `2\|critical` | Critical conditions |
| | `3\|errors` | Error conditions |
| | `4\|warnings` | Warning conditions |
| | `5\|notices` | Normal, but significant, conditions |
| | `6\|informational` | Informational messages |
| | `7\|debugging` | Debug-level messages |
| `program` | Exclude messages from a specified program. | |
| *<program-name>* | The name of a program. You can enter either one of the following predefined program names (depending on your device model), or another program name that you find in the log output. The pre-defined names are not case sensitive but other program names from the log output are. | |
| | `rip` | Routing Information Protocol (RIP) |
| | `ripng` | Routing Information Protocol - next generation (RIPng) |
| | `ospf` | Open Shortest Path First (OSPF) |
| | `ospfv3` | Open Shortest Path First (OSPF) version 3 (OSPFv3) |

| Parameter | Description | |
|---|---|---|
| | `bgp` | Border Gateway Protocol (BGP) |
| | `rsvp` | Resource Reservation Protocol (RSVP) |
| | `pim-dm` | Protocol Independent Multicast - Dense Mode (PIM-DM) |
| | `pim-sm` | Protocol Independent Multicast - Sparse Mode (PIM-SM) |
| | `pim-smv6` | PIM-SM version 6 (PIM-SMv6) |
| | `dot1x` | IEEE 802.1X Port-Based Access Control |
| | `lacp` | Link Aggregation Control Protocol (LACP) |
| | `stp` | Spanning Tree Protocol (STP) |
| | `rstp` | Rapid Spanning Tree Protocol (RSTP) |
| | `mstp` | Multiple Spanning Tree Protocol (MSTP) |
| | `imi` | Integrated Management Interface (IMI) |
| | `imish` | Integrated Management Interface Shell (IMISH) |
| | `epsr` | Ethernet Protection Switched Rings (EPSR) |
| | `irdp` | ICMP Router Discovery Protocol (IRDP) |
| | `rmon` | Remote Monitoring |
| | `loopprot` | Loop Protection |
| | `poe` | Power-inline (Power over Ethernet) |
| | `dhcpsn` | DHCP snooping (DHCPSN) |
| `facility` | Exclude messages from a syslog facility. | |
| *<facility>* | Specify one of the following syslog facilities to exclude messages from: | |
| | `kern` | Kernel messages |
| | `user` | Random user-level messages |
| | `mail` | Mail system |
| | `daemon` | System daemons |
| | `auth` | Security/authorization messages |
| | `syslog` | Messages generated internally by syslogd |
| | `lpr` | Line printer subsystem |
| | `news` | Network news subsystem |
| | `uucp` | UUCP subsystem |
| | `cron` | Clock daemon |
| | `authpriv` | Security/authorization messages (private) |
| | `ftp` | FTP daemon |

| Parameter | Description |
|---|---|
| `msgtext` | Exclude messages containing a certain text string. |
| *<text-string>* | A text string to match (maximum 128 characters). This is case sensitive, and must be the last text on the command line. |

**Default** No log messages are excluded

**Mode** Global configuration

**Example** To remove messages that contain the string "example of irrelevant message", use the following commands:

```
awplus# configure terminal
awplus(config)# log console exclude msgtext example of
irrelevant message
```

**Related commands**

default log console

log console

log console (filter)

show log config

# log date-format

**Overview** Use this command to change the date format for log messages to an ISO 8601 compliant format, or to return to the default date format.

**Syntax**

```
log date-format {iso|default}
```

| Parameter | Description |
|---|---|
| `iso` | Display the date and time in the ISO 8601 compliant format of: YYYY-MM-DDThh:mm:ssTZD |
| `default` | Display the date and time in the default date format of YYYY MMM DD HH:MM:SS |

**Default** The default option of YYYY MMM DD HH:MM:SS (except when using terminal monitor, when it is HH:MM:SS)

**Mode** Global Configuration

**Usage notes** In the ISO 8601 compliant format, a T separates the date from the time, and the time is followed by the timezone offset from UTC time. For example, this is a log message with an ISO 8601 compliant date:

```
2016-09-29T08:55:43+13:00 user.notice Gateway IMISH[1983]:
[manager@ttyS0]show run
```

This is a log message with the default date format:

```
2016 Sep 29 08:55:43 user.notice Gateway IMISH[1983]:
[manager@ttyS0]show run
```

The date format setting affects all log messages, no matter where the messages are stored or displayed.

**Examples** To set the date format to the ISO 8601 compliant format, use the commands:

```
awplus# configure terminal
awplus(config)# log date-format iso
```

To return to the default date format of YYYY MMM DD HH:MM:SS, use the commands:

```
awplus# configure terminal
awplus(config)# log date-format default
```

**Related commands**

show exception log

show log

show log permanent

**Command changes** Version 5.4.6-2.1: command added

# log email

**Overview** This command configures the device to send log messages to an email address. The email address is specified in this command.

**Syntax** `log email <email-address>`

| Parameter | Description |
|---|---|
| *<email-address>* | The email address to send log messages to |

**Default** By default no filters are defined for email log targets. Filters must be defined before messages will be sent.

**Mode** Global Configuration

**Example** To have log messages emailed to the email address `admin@alliedtelesis.com` use the following commands:

```
awplus# configure terminal
awplus(config)# log email admin@alliedtelesis.com
```

**Related commands**

default log email

log email (filter)

log email exclude

log email time

show log config

# log email (filter)

**Overview** This command creates a filter to select messages to be sent to an email address. Selection can be based on the priority/ severity of the message, the program that generated the message, the logging facility used, a sub-string within the message or a combination of some or all of these.

The **no** variant of this command configures the device to no longer send log messages to a specified email address. All configuration relating to this log target will be removed.

**Syntax**

```
log email <email-address> [level <level>] [program
<program-name>] [facility <facility>] [msgtext <text-string>]
```

```
no log email <email-address> [level <level>] [program
<program-name>] [facility <facility>] [msgtext <text-string>]
```

| Parameter | Description | |
|---|---|---|
| *<email-address>* | The email address to send logging messages to | |
| `level` | Filter messages by severity level. | |
| *<level>* | The minimum severity of message to send. The level can be specified as one of the following numbers or level names, where 0 is the highest severity and 7 is the lowest severity: | |
| | `0\|emergencies` | System is unusable |
| | `1\|alerts` | Action must be taken immediately |
| | `2\|critical` | Critical conditions |
| | `3\|errors` | Error conditions |
| | `4\|warnings` | Warning conditions |
| | `5\|notices` | Normal, but significant, conditions |
| | `6\|informational` | Informational messages |
| | `7\|debugging` | Debug-level messages |
| `program` | Filter messages by program. Include messages from a specified program. | |
| *<program-name>* | The name of a program to log messages from. You can enter either one of the following predefined program names (depending on your device model), or another program name that you find in the log output. The pre-defined names are not case sensitive but other program names from the log output are. | |
| | `rip` | Routing Information Protocol (RIP) |
| | `ripng` | Routing Information Protocol - next generation (RIPng) |
| | `ospf` | Open Shortest Path First (OSPF) |
| | `ospfv3` | Open Shortest Path First (OSPF) version 3 (OSPFv3) |
| | `bgp` | Border Gateway Protocol (BGP) |

| Parameter | Description | |
|---|---|---|
| | `rsvp` | Resource Reservation Protocol (RSVP) |
| | `pim-dm` | Protocol Independent Multicast - Dense Mode (PIM-DM) |
| | `pim-sm` | Protocol Independent Multicast - Sparse Mode (PIM-SM) |
| | `pim-smv6` | PIM-SM version 6 (PIM-SMv6) |
| | `dot1x` | IEEE 802.1X Port-Based Access Control |
| | `lacp` | Link Aggregation Control Protocol (LACP) |
| | `stp` | Spanning Tree Protocol (STP) |
| | `rstp` | Rapid Spanning Tree Protocol (RSTP) |
| | `mstp` | Multiple Spanning Tree Protocol (MSTP) |
| | `imi` | Integrated Management Interface (IMI) |
| | `imish` | Integrated Management Interface Shell (IMISH) |
| | `epsr` | Ethernet Protection Switched Rings (EPSR) |
| | `irdp` | ICMP Router Discovery Protocol (IRDP) |
| | `rmon` | Remote Monitoring |
| | `loopprot` | Loop Protection |
| | `poe` | Power-inline (Power over Ethernet) |
| | `dhcpsn` | DHCP snooping (DHCPSN) |
| `facility` | Filter messages by syslog facility. | |
| *<facility>* | Specify one of the following syslog facilities to include messages from: | |
| | `kern` | Kernel messages |
| | `user` | Random user-level messages |
| | `mail` | Mail system |
| | `daemon` | System daemons |
| | `auth` | Security/authorization messages |
| | `syslog` | Messages generated internally by syslogd |
| | `lpr` | Line printer subsystem |
| | `news` | Network news subsystem |
| | `uucp` | UUCP subsystem |
| | `cron` | Clock daemon |
| | `authpriv` | Security/authorization messages (private) |
| | `ftp` | FTP daemon |
| `msgtext` | Select messages containing a certain text string. | |
| *<text-string>* | A text string to match (maximum 128 characters). This is case sensitive, and must be the last text on the command line. | |

**Mode** Global Configuration

**Examples** To create a filter to send all messages containing the text “Bridging initialization”, to the email address admin@homebase.com, use the following commands:

```
awplus# configure terminal
awplus(config)# log email admin@homebase.com msgtext "Bridging initialization"
```

To create a filter to send messages with a severity level of **informational** and above to the email address admin@alliedtelesis.com, use the following commands:

```
awplus# configure terminal
awplus(config)# log email admin@alliedtelesis.com level informational
```

To stop the device emailing log messages emailed to the email address admin@alliedtelesis.com, use the following commands:

```
awplus# configure terminal
awplus(config)# no log email admin@homebase.com
```

To remove a filter that sends messages with a severity level of **informational** and above to the email address admin@alliedtelesis.com, use the following commands:

```
awplus# configure terminal
awplus(config)# no log email admin@alliedtelesis.com level informational
```

**Related commands**

default log email

log email

log email exclude

log email time

show log config

# log email exclude

**Overview** Use this command to prevent specified log messages from being emailed, when the device is configured to send log messages to an email address. You can exclude messages on the basis of:

- the priority/severity of the message
- the program that generated the message
- the logging facility used
- a sub-string within the message, or
- a combination of some or all of these.

Use the **no** variant of this command to stop excluding the specified messages.

**Syntax**

```
log email exclude [level <level>] [program <program-name>]
[facility <facility>] [msgtext <text-string>]
```

```
no log email exclude [level <level>] [program <program-name>]
[facility <facility>] [msgtext <text-string>]
```

| Parameter | Description | |
|---|---|---|
| `level` | Exclude messages of the specified severity level. | |
| *<level>* | The severity level to exclude. The level can be specified as one of the following numbers or level names, where 0 is the highest severity and 7 is the lowest severity: | |
| | `0\|emergencies` | System is unusable |
| | `1\|alerts` | Action must be taken immediately |
| | `2\|critical` | Critical conditions |
| | `3\|errors` | Error conditions |
| | `4\|warnings` | Warning conditions |
| | `5\|notices` | Normal, but significant, conditions |
| | `6\|informational` | Informational messages |
| | `7\|debugging` | Debug-level messages |
| `program` | Exclude messages from a specified program. | |
| *<program-name>* | The name of a program. You can enter either one of the following predefined program names (depending on your device model), or another program name that you find in the log output. The pre-defined names are not case sensitive but other program names from the log output are. | |
| | `rip` | Routing Information Protocol (RIP) |
| | `ripng` | Routing Information Protocol - next generation (RIPng) |
| | `ospf` | Open Shortest Path First (OSPF) |
| | `ospfv3` | Open Shortest Path First (OSPF) version 3 (OSPFv3) |

| Parameter | Description | |
|---|---|---|
| | `bgp` | Border Gateway Protocol (BGP) |
| | `rsvp` | Resource Reservation Protocol (RSVP) |
| | `pim-dm` | Protocol Independent Multicast - Dense Mode (PIM-DM) |
| | `pim-sm` | Protocol Independent Multicast - Sparse Mode (PIM-SM) |
| | `pim-smv6` | PIM-SM version 6 (PIM-SMv6) |
| | `dot1x` | IEEE 802.1X Port-Based Access Control |
| | `lacp` | Link Aggregation Control Protocol (LACP) |
| | `stp` | Spanning Tree Protocol (STP) |
| | `rstp` | Rapid Spanning Tree Protocol (RSTP) |
| | `mstp` | Multiple Spanning Tree Protocol (MSTP) |
| | `imi` | Integrated Management Interface (IMI) |
| | `imish` | Integrated Management Interface Shell (IMISH) |
| | `epsr` | Ethernet Protection Switched Rings (EPSR) |
| | `irdp` | ICMP Router Discovery Protocol (IRDP) |
| | `rmon` | Remote Monitoring |
| | `loopprot` | Loop Protection |
| | `poe` | Power-inline (Power over Ethernet) |
| | `dhcpsn` | DHCP snooping (DHCPSN) |
| `facility` | Exclude messages from a syslog facility. | |
| *<facility>* | Specify one of the following syslog facilities to exclude messages from: | |
| | `kern` | Kernel messages |
| | `user` | Random user-level messages |
| | `mail` | Mail system |
| | `daemon` | System daemons |
| | `auth` | Security/authorization messages |
| | `syslog` | Messages generated internally by syslogd |
| | `lpr` | Line printer subsystem |
| | `news` | Network news subsystem |
| | `uucp` | UUCP subsystem |
| | `cron` | Clock daemon |
| | `authpriv` | Security/authorization messages (private) |
| | `ftp` | FTP daemon |

| Parameter | Description |
|---|---|
| `msgtext` | Exclude messages containing a certain text string. |
| *<text-string>* | A text string to match (maximum 128 characters). This is case sensitive, and must be the last text on the command line. |

**Default** No log messages are excluded

**Mode** Global configuration

**Example** To remove messages that contain the string "example of irrelevant message", use the following commands:

```
awplus# configure terminal
awplus(config)# log email exclude msgtext example of irrelevant
message
```

**Related commands**

default log email

log email

log email (filter)

log email time

show log config

# log email time

**Overview** This command configures the time used in messages sent to an email address. If the syslog server is in a different time zone to your device then the time offset can be configured using either the **utc-offset** parameter option keyword or the **local-offset** parameter option keyword, where **utc-offset** is the time difference from UTC (Universal Time, Coordinated) and **local-offset** is the difference from local time.

**Syntax**

```
log email <email-address> time {local|local-offset|utc-offset
{plus|minus}<0-24>}
```

| Parameter | Description |
|---|---|
| `<email-address>` | The email address to send log messages to |
| `time` | Specify the time difference between the email recipient and the device you are configuring. |
| `local` | The device is in the same time zone as the email recipient |
| `local-offset` | The device is in a different time zone to the email recipient. Use the **plus** or **minus** keywords and specify the difference (offset) from local time of the device to the email recipient in hours. |
| `utc-offset` | The device is in a different time zone to the email recipient. Use the **plus** or **minus** keywords and specify the difference (offset) from UTC time of the device to the email recipient in hours. |
| `plus` | Negative offset (difference) from the device to the email recipient. |
| `minus` | Positive offset (difference) from the device to the email recipient. |
| `<0-24>` | World Time zone offset in hours |

**Default** The default is **local** time.

**Mode** Global Configuration

**Usage notes** Use the **local** option if the email recipient is in the same time zone as this device. Messages will display the time as on the local device when the message was generated.

Use the **offset** option if the email recipient is in a different time zone to this device. Specify the time offset of the email recipient in hours. Messages will display the time they were generated on this device but converted to the time zone of the email recipient.

**Examples**

To send messages to the email address `test@home.com` in the same time zone as the device's local time zone, use the following commands:

```
awplus# configure terminal
awplus(config)# log email admin@base.com time local 0
```

To send messages to the email address `admin@base.com` with the time information converted to the time zone of the email recipient, which is 3 hours ahead of the device's local time zone, use the following commands:

```
awplus# configure terminal
awplus(config)# log email admin@base.com time local-offset plus
3
```

To send messages to the email address `user@remote.com` with the time information converted to the time zone of the email recipient, which is 3 hours behind the device's UTC time zone, use the following commands:

```
awplus# configure terminal
awplus(config)# log email user@remote.com time utc-offset minus
3
```

**Related commands**

default log email

log email

log email (filter)

log email exclude

show log config

# log external

**Overview**

Use this command to enable external logging. External logging sends syslog messages to a file on an SD card or USB storage device.

Use this command to enable external logging. External logging sends syslog messages to a file on an SD card.

Use this command to enable external logging. External logging sends syslog messages to a file on a USB storage device.

If the file does not already exist on the storage device, it (and any specified subdirectory) will be automatically created. If the file already exists, messages are appended to it.

Use the **no** variant of this command to disable external logging.

**Syntax**

```
log external <filename>
no log external
```

| Parameter | Description |
|---|---|
| *<filename>* | The file and optionally directory path to store the log messages in. See Introduction on page 142 for valid syntax. |

**Default**

External logging is disabled by default.

**Mode**

Global Configuration

**Usage notes**

We strongly recommend using ext3 or ext4 as the file system on the external storage device. These file systems have a lower risk of file corruption occurring if the switch or firewall loses power.

You should also unmount the storage device before removing it from the switch or firewall, to avoid corrupting the log file. To unmount the device, use the **unmount** command.

**Example**

To save messages to a file called “messages.log” in a directory called “log” on an SD card, use the command:

```
awplus# configure terminal
awplus(config)# log external card:/log/messages.log
```

To save messages to a file called “messages.log” in a directory called “log” on a USB storage device, use the command:

```
awplus# configure terminal
awplus(config)# log external usb:/log/messages.log
```

**Related commands**

clear log external

default log external

log external (filter)

log external exclude

log external rotate

log external size

show log config

show log external

unmount

**Command changes**

Version 5.4.7-1.1: command added

# log external (filter)

**Overview** Use this command to create a filter to select messages to be sent to the external log. You can include messages based on:

- the priority/severity of the message
- the program that generated the message
- the logging facility used
- a sub-string within the message, or
- a combination of some or all of these.

The **no** variant of this command removes the corresponding filter, so that the specified messages are no longer sent to the external log.

**Syntax**

```
log external [level <level>] [program <program-name>] [facility
<facility>] [msgtext <text-string>]
```

```
no log external [level <level>] [program <program-name>]
[facility <facility>] [msgtext <text-string>]
```

| Parameter | Description | |
|---|---|---|
| `level` | Filter messages to the external log by severity level. | |
| *<level>* | The minimum severity of message to send to the external log. The level can be specified as one of the following numbers or level names, where 0 is the highest severity and 7 is the lowest severity: | |
| | `0\|emergencies` | System is unusable |
| | `1\|alerts` | Action must be taken immediately |
| | `2\|critical` | Critical conditions |
| | `3\|errors` | Error conditions |
| | `4\|warnings` | Warning conditions |
| | `5\|notices` | Normal, but significant, conditions |
| | `6\|informational` | Informational messages |
| | `7\|debugging` | Debug-level messages |
| `program` | Filter messages to the external log by program. Include messages from a specified program in the external log. | |
| *<program-name>* | The name of a program to log messages from. You can enter either one of the following predefined program names (depending on your device model), or another program name that you find in the log output. The pre-defined names are not case sensitive but other program names from the log output are. | |
| | `rip` | Routing Information Protocol (RIP) |
| | `ripng` | Routing Information Protocol - next generation (RIPng) |
| | `ospf` | Open Shortest Path First (OSPF) |

| Parameter | Description | |
|---|---|---|
| | `ospfv3` | Open Shortest Path First (OSPF) version 3 (OSPFv3) |
| | `bgp` | Border Gateway Protocol (BGP) |
| | `rsvp` | Resource Reservation Protocol (RSVP) |
| | `pim-dm` | Protocol Independent Multicast - Dense Mode (PIM-DM) |
| | `pim-sm` | Protocol Independent Multicast - Sparse Mode (PIM-SM) |
| | `pim-smv6` | PIM-SM version 6 (PIM-SMv6) |
| | `dot1x` | IEEE 802.1X Port-Based Access Control |
| | `lacp` | Link Aggregation Control Protocol (LACP) |
| | `stp` | Spanning Tree Protocol (STP) |
| | `rstp` | Rapid Spanning Tree Protocol (RSTP) |
| | `mstp` | Multiple Spanning Tree Protocol (MSTP) |
| | `imi` | Integrated Management Interface (IMI) |
| | `imish` | Integrated Management Interface Shell (IMISH) |
| | `epsr` | Ethernet Protection Switched Rings (EPSR) |
| | `irdp` | ICMP Router Discovery Protocol (IRDP) |
| | `rmon` | Remote Monitoring |
| | `loopprot` | Loop Protection |
| | `poe` | Power-inline (Power over Ethernet) |
| | `dhcpsn` | DHCP snooping (DHCPSN) |
| `facility` | Filter messages to the external log by syslog facility. | |
| *<facility>* | Specify one of the following syslog facilities to include messages from in the log: | |
| | `kern` | Kernel messages |
| | `user` | Random user-level messages |
| | `mail` | Mail system |
| | `daemon` | System daemons |
| | `auth` | Security/authorization messages |
| | `syslog` | Messages generated internally by syslogd |
| | `lpr` | Line printer subsystem |
| | `news` | Network news subsystem |
| | `uucp` | UUCP subsystem |
| | `cron` | Clock daemon |
| | `authpriv` | Security/authorization messages (private) |
| | `ftp` | FTP daemon |

| Parameter | Description |
|---|---|
| `msgtext` | Select messages containing a certain text string. |
| *<text-string>* | A text string to match (maximum 128 characters). This is case sensitive, and must be the last text on the command line. |

**Default** By default the external log has a filter to select messages whose severity level is "notices (5)" or higher. This filter may be removed using the **no** variant of this command.

**Mode** Global Configuration

**Examples** To add a filter to send all messages containing the text "Bridging initialization" to the external log, use the following commands:

```
awplus# configure terminal
awplus(config)# log external msgtext Bridging initialization
```

To remove a filter that sends all messages containing the text "Bridging initialization" to the external log, use the following commands:

```
awplus# configure terminal
awplus(config)# no log external msgtext Bridging initialization
```

**Related commands**

clear log external

default log external

log external

log external exclude

log external rotate

log external size

show log config

show log external

unmount

**Command changes** Version 5.4.7-1.1: command added

# log external exclude

**Overview** Use this command to exclude specified log messages from the external log. You can exclude messages on the basis of:

- the priority/severity of the message
- the program that generated the message
- the logging facility used
- a sub-string within the message, or
- a combination of some or all of these.

Use the **no** variant of this command to stop excluding the specified messages.

**Syntax**

```
log external exclude [level <level>] [program <program-name>]
[facility <facility>] [msgtext <text-string>]
```

```
no log external exclude [level <level>] [program
<program-name>] [facility <facility>] [msgtext <text-string>]
```

| Parameter | Description | |
|---|---|---|
| `level` | Exclude messages of the specified severity level. | |
| *<level>* | The severity level to exclude. The level can be specified as one of the following numbers or level names, where 0 is the highest severity and 7 is the lowest severity: | |
| | `0\|emergencies` | System is unusable |
| | `1\|alerts` | Action must be taken immediately |
| | `2\|critical` | Critical conditions |
| | `3\|errors` | Error conditions |
| | `4\|warnings` | Warning conditions |
| | `5\|notices` | Normal, but significant, conditions |
| | `6\|informational` | Informational messages |
| | `7\|debugging` | Debug-level messages |
| `program` | Exclude messages from a specified program. | |
| *<program-name>* | The name of a program. You can enter either one of the following predefined program names (depending on your device model), or another program name that you find in the log output. The pre-defined names are not case sensitive but other program names from the log output are. | |
| | `rip` | Routing Information Protocol (RIP) |
| | `ripng` | Routing Information Protocol - next generation (RIPng) |
| | `ospf` | Open Shortest Path First (OSPF) |
| | `ospfv3` | Open Shortest Path First (OSPF) version 3 (OSPFv3) |
| | `bgp` | Border Gateway Protocol (BGP) |

| Parameter | Description | |
|---|---|---|
| | `rsvp` | Resource Reservation Protocol (RSVP) |
| | `pim-dm` | Protocol Independent Multicast - Dense Mode (PIM-DM) |
| | `pim-sm` | Protocol Independent Multicast - Sparse Mode (PIM-SM) |
| | `pim-smv6` | PIM-SM version 6 (PIM-SMv6) |
| | `dot1x` | IEEE 802.1X Port-Based Access Control |
| | `lacp` | Link Aggregation Control Protocol (LACP) |
| | `stp` | Spanning Tree Protocol (STP) |
| | `rstp` | Rapid Spanning Tree Protocol (RSTP) |
| | `mstp` | Multiple Spanning Tree Protocol (MSTP) |
| | `imi` | Integrated Management Interface (IMI) |
| | `imish` | Integrated Management Interface Shell (IMISH) |
| | `epsr` | Ethernet Protection Switched Rings (EPSR) |
| | `irdp` | ICMP Router Discovery Protocol (IRDP) |
| | `rmon` | Remote Monitoring |
| | `loopprot` | Loop Protection |
| | `poe` | Power-inline (Power over Ethernet) |
| | `dhcpsn` | DHCP snooping (DHCPSN) |
| `facility` | Exclude messages from a syslog facility. | |
| *<facility>* | Specify one of the following syslog facilities to exclude messages from: | |
| | `kern` | Kernel messages |
| | `user` | Random user-level messages |
| | `mail` | Mail system |
| | `daemon` | System daemons |
| | `auth` | Security/authorization messages |
| | `syslog` | Messages generated internally by syslogd |
| | `lpr` | Line printer subsystem |
| | `news` | Network news subsystem |
| | `uucp` | UUCP subsystem |
| | `cron` | Clock daemon |
| | `authpriv` | Security/authorization messages (private) |
| | `ftp` | FTP daemon |
| `msgtext` | Exclude messages containing a certain text string. | |
| *<text-string>* | A text string to match (maximum 128 characters). This is case sensitive, and must be the last text on the command line. | |

**Default** No log messages are excluded

**Mode** Global Configuration

**Example** To remove messages that contain the string “example of irrelevant message”, use the following commands:

```
awplus# configure terminal
awplus(config)# log external exclude msgtext example of
irrelevant message
```

**Related commands**

clear log external

default log external

log external

log external (filter)

log external rotate

log external size

show log config

show log external

unmount

**Command changes** Version 5.4.7-1.1: command added

# log external rotate

**Overview** Use this command to configure the number of files that the external log can rotate through.

Use the **no** variant of this command to return to the default.

**Syntax**

```
log external rotate <0-255>
no log external rotate
```

| Parameter | Description |
|---|---|
| *<0-255>* | The number of additional files to rotate through. Note that the device rotates between the initial file and the number of additional files specified by this value - see the Usage section below. |

**Default** The default is 1, which rotates between the initial file and 1 additional file (for example, rotates between messages.log and messages.log.1)

**Mode** Global Configuration

**Usage notes** The device rotates between the initial file and the number of additional files specified by this command. For example, the diagram below shows how setting rotate to 2 makes the device rotate through 3 files.

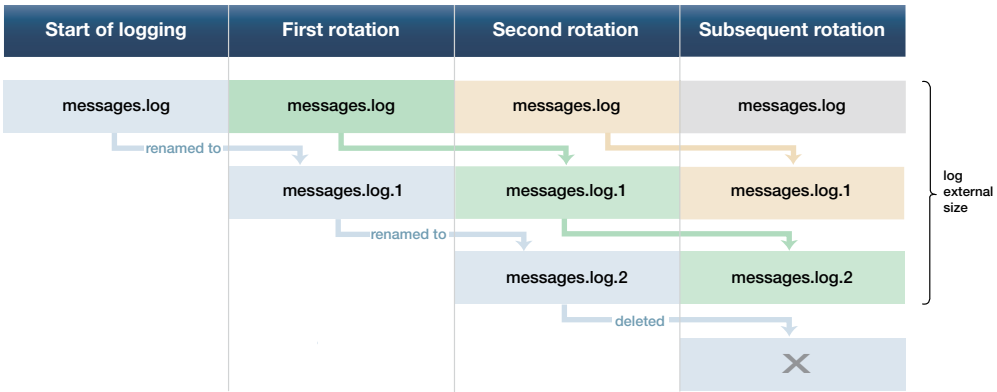


Note that if you set rotate to 0, and the external log file becomes full, then the device deletes the full log file and creates a new (empty) file of the same name to save messages into. For this reason, we recommend setting rotate to at least 1.

**Example** To set the rotation value to 2, and therefore rotate between 3 files, use the commands:

```
awplus# configure terminal
awplus(config)# log external rotate 2
```

**Related commands** clear log external

default log external

log external

log external (filter)

log external exclude

log external size

show log config

show log external

unmount

**Command changes**

Version 5.4.7-1.1: command added

# log external size

**Overview**

Use this command to configure the total amount of size that the external log is permitted to use, in kilobytes. The maximum possible depends on the storage device's file system.

Note that if you are rotating between multiple files, this is the maximum size of all files, not of each individual file. For example, if you are rotating between 2 files (**log external rotate 1**), each file will have a maximum size of 25 kBytes by default.

Use the **no** variant of this command to return to the default size.

**Syntax**

```
log external size [<50-4194304>]
no log external size
```

| Parameter | Description |
|---|---|
| *<50-4194304>* | The total amount of size that the external log is permitted to use, in kilobytes. |

**Default**

50 kBytes

**Mode**

Global Configuration

**Example**

To configure a total log size of 100 kBytes, use the commands:

```
awplus# configure terminal
awplus(config)# log external size 100
```

**Related commands**

clear log external

default log external

log external

log external (filter)

log external exclude

log external rotate

log external size

show log config

show log external

unmount

**Command changes**

Version 5.4.7-1.1: command added

# log facility

**Overview** Use this command to assign a facility to all log messages generated on this device. This facility overrides any facility that is automatically generated as part of the log message.

Use the **no** variant of this command to remove the configured facility.

**Syntax**

```
log facility {kern|user|mail|daemon|auth|syslog|lpr|news|uucp|
cron|authpriv|ftp|local0|local1|local2|local3|local4|local5|
local6|local7}
```

```
no log facility
```

**Default** None. The outgoing syslog facility depends on the log message.

**Mode** Global Configuration

**Usage notes** Specifying different facilities for log messages generated on different devices can allow messages from multiple devices sent to a common server to be distinguished from each other.

Ordinarily, the facility values generated in log messages have meanings as shown in the following table. Using this command will override these meanings, and the new meanings will depend on the use you put them to.

Table 10-1: Ordinary meanings of the facility parameter in log messages

| Facility | Description |
|---|---|
| kern | Kernel messages |
| user | User-level messages |
| mail | Mail system |
| daemon | System daemons |
| auth | Security/authorization messages |
| syslog | Messages generated internally by the syslog daemon |
| lpr | Line printer subsystem |
| news | Network news subsystem |
| uucp | UNIX-to-UNIX Copy Program subsystem |
| cron | Clock daemon |
| authpriv | Security/authorization (private) messages |

Table 10-1: Ordinary meanings of the facility parameter in log messages (cont.)

| Facility | Description |
|---|---|
| `ftp` | FTP daemon |
| `local<0..7>` | The facility labels above have specific meanings, while the local facility labels are intended to be put to local use. In AlliedWare Plus, some of these local facility labels are used in log messages. In particular, local5 is assigned to log messages generated by UTM Firewall security features. |

**Example**

To specify a facility of local6, use the following commands:

```
awplus# configure terminal
awplus(config)# log facility local6
```

**Related commands**

show log config

# log host

**Overview**

This command configures the device to send log messages to a remote syslog server via UDP port 514. The IP address of the remote server must be specified. By default no filters are defined for remote syslog servers. Filters must be defined before messages will be sent.

Use the **no** variant of this command to stop sending log messages to the remote syslog server.

**Syntax**

```
log host <ipv4-addr> [secure]
log host <ipv6-addr>
no log host <ipv4-addr>|<ipv6-addr>
```

| Parameter | Description |
|---|---|
| *<ipv4-addr>* | Specify the source IPv4 address, in dotted decimal notation (A.B.C.D). |
| *<ipv6-addr>* | Specify the source IPv6 address, in X:X::X:X notation. |
| `secure` | Optional value to create a secure log destination. This option is only valid for IPv4 hosts. |

**Mode**

Global Configuration

**Usage notes**

Use the optional **secure** parameter to configure a secure IPv4 syslog host. For secure hosts, syslog over TLS is used to encrypt the logs. The certificate received from the remote log server must have an issuer chain that terminates with the root CA certificate for any of the trustpoints that are associated with the application.

The remote server may also request that a certificate is transmitted from the local device. In this situation the first trustpoint added to the syslog application will be transmitted to the remote server.

For detailed information about securing syslog, see the PKI Feature Overview_and Configuration_Guide.

**Examples**

To configure the device to send log messages to a remote secure syslog server with IP address 10.32.16.99, use the following commands:

```
awplus# configure terminal
awplus(config)# log host 10.32.16.99 secure
```

To stop the device from sending log messages to the remote syslog server with IP address 10.32.16.99, use the following commands:

```
awplus# configure terminal
awplus(config)# no log host 10.32.16.99
```

**Related commands**

default log host

log host (filter)

log host exclude

log host source

log host startup-delay

log host time

log trustpoint

show log config

# log host (filter)

**Overview** This command creates a filter to select messages to be sent to a remote syslog server. Selection can be based on the priority/severity of the message, the program that generated the message, the logging facility used, a substring within the message or a combination of some or all of these.

The **no** variant of this command configures the device to no longer send log messages to a remote syslog server. The IP address of the syslog server must be specified. All configuration relating to this log target will be removed.

**Syntax**

```
log host <ip-addr> [level <level>] [program <program-name>]
[facility <facility>] [msgtext <text-string>]
```

```
no log host <ip-addr> [level <level>] [program <program-name>]
[facility <facility>] [msgtext <text-string>]
```

| Parameter | Description | |
|---|---|---|
| *<ip-addr>* | The IP address of a remote syslog server. | |
| `level` | Filter messages by severity level. | |
| *<level>* | The minimum severity of message to send. The level can be specified as one of the following numbers or level names, where 0 is the highest severity and 7 is the lowest severity: | |
| | `0\|emergencies` | System is unusable |
| | `1\|alerts` | Action must be taken immediately |
| | `2\|critical` | Critical conditions |
| | `3\|errors` | Error conditions |
| | `4\|warnings` | Warning conditions |
| | `5\|notices` | Normal, but significant, conditions |
| | `6\|informational` | Informational messages |
| | `7\|debugging` | Debug-level messages |
| `program` | Filter messages by program. Include messages from a specified program. | |
| *<program-name>* | The name of a program to log messages from. You can enter either one of the following predefined program names (depending on your device model), or another program name that you find in the log output. The pre-defined names are not case sensitive but other program names from the log output are. | |
| | `rip` | Routing Information Protocol (RIP) |
| | `ripng` | Routing Information Protocol - next generation (RIPng) |
| | `ospf` | Open Shortest Path First (OSPF) |
| | `ospfv3` | Open Shortest Path First (OSPF) version 3 (OSPFv3) |
| | `bgp` | Border Gateway Protocol (BGP) |
| | `rsvp` | Resource Reservation Protocol (RSVP) |

| Parameter | Description | |
|---|---|---|
| | `pim-dm` | Protocol Independent Multicast - Dense Mode (PIM-DM) |
| | `pim-sm` | Protocol Independent Multicast - Sparse Mode (PIM-SM) |
| | `pim-smv6` | PIM-SM version 6 (PIM-SMv6) |
| | `dot1x` | IEEE 802.1X Port-Based Access Control |
| | `lacp` | Link Aggregation Control Protocol (LACP) |
| | `stp` | Spanning Tree Protocol (STP) |
| | `rstp` | Rapid Spanning Tree Protocol (RSTP) |
| | `mstp` | Multiple Spanning Tree Protocol (MSTP) |
| | `imi` | Integrated Management Interface (IMI) |
| | `imish` | Integrated Management Interface Shell (IMISH) |
| | `epsr` | Ethernet Protection Switched Rings (EPSR) |
| | `irdp` | ICMP Router Discovery Protocol (IRDP) |
| | `rmon` | Remote Monitoring |
| | `loopprot` | Loop Protection |
| | `poe` | Power-inline (Power over Ethernet) |
| | `dhcpsn` | DHCP snooping (DHCPSN) |
| `facility` | Filter messages by syslog facility. | |
| *<facility>* | Specify one of the following syslog facilities to include messages from: | |
| | `kern` | Kernel messages |
| | `user` | Random user-level messages |
| | `mail` | Mail system |
| | `daemon` | System daemons |
| | `auth` | Security/authorization messages |
| | `syslog` | Messages generated internally by syslogd |
| | `lpr` | Line printer subsystem |
| | `news` | Network news subsystem |
| | `uucp` | UUCP subsystem |
| | `cron` | Clock daemon |
| | `authpriv` | Security/authorization messages (private) |
| | `ftp` | FTP daemon |
| `msgtext` | Select messages containing a certain text string. | |
| *<text-string>* | A text string to match (maximum 128 characters). This is case sensitive, and must be the last text on the command line. | |

**Mode** Global Configuration

**Examples** To create a filter to send all messages containing the text “Bridging initialization”, to a remote syslog server with IP address 10.32.16.21, use the following commands:

```
awplus# configure terminal
awplus(config)# log host 10.32.16.21 msgtext "Bridging initialization"
```

To create a filter to send messages with a severity level of **informational** and above to the syslog server with IP address 10.32.16.21, use the following commands:

```
awplus# configure terminal
awplus(config)# log host 10.32.16.21 level informational
```

To remove a filter that sends all messages containing the text “Bridging initialization”, to a remote syslog server with IP address 10.32.16.21, use the following commands:

```
awplus# configure terminal
awplus(config)# no log host 10.32.16.21 msgtext "Bridging initialization"
```

To remove a filter that sends messages with a severity level of **informational** and above to the syslog server with IP address 10.32.16.21, use the following commands:

```
awplusawpluls# configure terminal
awplus(config)# no log host 10.32.16.21 level informational
```

**Related commands**

default log host

log host

log host exclude

log host source

log host time

show log config

# log host exclude

**Overview** Use this command to prevent specified log messages from being sent to the remote syslog server, when log host is enabled. You can exclude messages on the basis of:

- the priority/severity of the message
- the program that generated the message
- the logging facility used
- a sub-string within the message, or
- a combination of some or all of these.

Use the **no** variant of this command to stop excluding the specified messages.

**Syntax**

```
log host exclude [level <level>] [program <program-name>]
[facility <facility>] [msgtext <text-string>]
```

```
no log host exclude [level <level>] [program <program-name>]
[facility <facility>] [msgtext <text-string>]
```

| Parameter | Description | |
|---|---|---|
| `level` | Exclude messages of the specified severity level. | |
| *<level>* | The severity level to exclude. The level can be specified as one of the following numbers or level names, where 0 is the highest severity and 7 is the lowest severity: | |
| | `0\|emergencies` | System is unusable |
| | `1\|alerts` | Action must be taken immediately |
| | `2\|critical` | Critical conditions |
| | `3\|errors` | Error conditions |
| | `4\|warnings` | Warning conditions |
| | `5\|notices` | Normal, but significant, conditions |
| | `6\|informational` | Informational messages |
| | `7\|debugging` | Debug-level messages |
| `program` | Exclude messages from a specified program. | |
| *<program-name>* | The name of a program. You can enter either one of the following predefined program names (depending on your device model), or another program name that you find in the log output. The pre-defined names are not case sensitive but other program names from the log output are. | |
| | `rip` | Routing Information Protocol (RIP) |
| | `ripng` | Routing Information Protocol - next generation (RIPng) |
| | `ospf` | Open Shortest Path First (OSPF) |
| | `ospfv3` | Open Shortest Path First (OSPF) version 3 (OSPFv3) |

| Parameter | Description | |
|---|---|---|
| | `bgp` | Border Gateway Protocol (BGP) |
| | `rsvp` | Resource Reservation Protocol (RSVP) |
| | `pim-dm` | Protocol Independent Multicast - Dense Mode (PIM-DM) |
| | `pim-sm` | Protocol Independent Multicast - Sparse Mode (PIM-SM) |
| | `pim-smv6` | PIM-SM version 6 (PIM-SMv6) |
| | `dot1x` | IEEE 802.1X Port-Based Access Control |
| | `lacp` | Link Aggregation Control Protocol (LACP) |
| | `stp` | Spanning Tree Protocol (STP) |
| | `rstp` | Rapid Spanning Tree Protocol (RSTP) |
| | `mstp` | Multiple Spanning Tree Protocol (MSTP) |
| | `imi` | Integrated Management Interface (IMI) |
| | `imish` | Integrated Management Interface Shell (IMISH) |
| | `epsr` | Ethernet Protection Switched Rings (EPSR) |
| | `irdp` | ICMP Router Discovery Protocol (IRDP) |
| | `rmon` | Remote Monitoring |
| | `loopprot` | Loop Protection |
| | `poe` | Power-inline (Power over Ethernet) |
| | `dhcpsn` | DHCP snooping (DHCPSN) |
| `facility` | Exclude messages from a syslog facility. | |
| *<facility>* | Specify one of the following syslog facilities to exclude messages from: | |
| | `kern` | Kernel messages |
| | `user` | Random user-level messages |
| | `mail` | Mail system |
| | `daemon` | System daemons |
| | `auth` | Security/authorization messages |
| | `syslog` | Messages generated internally by syslogd |
| | `lpr` | Line printer subsystem |
| | `news` | Network news subsystem |
| | `uucp` | UUCP subsystem |
| | `cron` | Clock daemon |
| | `authpriv` | Security/authorization messages (private) |
| | `ftp` | FTP daemon |

| Parameter | Description |
|---|---|
| `msgtext` | Exclude messages containing a certain text string. |
| *<text-string>* | A text string to match (maximum 128 characters). This is case sensitive, and must be the last text on the command line. |

**Default** No log messages are excluded

**Mode** Global configuration

**Example** To remove messages that contain the string "example of irrelevant message", use the following commands:

```
awplus# configure terminal
awplus(config)# log host exclude msgtext example of irrelevant message
```

**Related commands**

default log host

log host

log host (filter)

log host source

log host time

show log config

# log host source

**Overview**

Use this command to specify a source interface or IP address for the device to send syslog messages from. You can specify any one of an interface name, an IPv4 address or an IPv6 address.

This is useful if the device can reach the syslog server via multiple interfaces or addresses and you want to control which interface/address the device uses.

Note that AlliedWare Plus does not support source interface settings on secure log hosts (which are hosts configured using "log host <ip-address> secure").

Use the **no** variant of this command to stop specifying a source interface or address.

**Syntax**

```
log host source {<interface-name>|<ipv4-addr>|<ipv6-addr>}
no log host source
```

| Parameter | Description |
|---|---|
| *<interface-name>* | Specify the source interface name. You can enter a VLAN, eth interface or loopback interface. |
| *<ipv4-addr>* | Specify the source IPv4 address, in dotted decimal notation (A.B.C.D). |
| *<ipv6-addr>* | Specify the source IPv6 address, in X:X::X:X notation. |

**Default**

None (no source is configured)

**Mode**

Global Configuration

**Example**

To send syslog messages from 192.168.1.1, use the commands:

```
awplus# configure terminal
awplus(config)# log host source 192.168.1.1
```

**Related commands**

default log host

log host

log host (filter)

log host exclude

log host time

show log config

# log host startup-delay

**Overview**

Use this command to set the delay between the device booting up and it attempting to connect to remote log hosts. This is to allow time for network connectivity to the remote host to be established. During this period, the device buffers log messages and sends them once it has connected to the remote host.

The startup delay begins when the message "syslog-ng starting up" appears in the log.

If the default startup delay is not long enough for the boot and configuration process to complete and the links to come up, you may see logging failure messages on startup. In these cases, you can use the command to increase the startup delay.

Use the **no** variant of this command to return to the default delay values.

**Syntax**

```
log host startup-delay [delay <1-600>] [messages <1-5000>]
no log host startup-delay
```

| Parameter | Description |
|---|---|
| `delay <1-600>` | The time, in seconds, from when syslog starts before the device attempts to filter and transmit the buffered messages to remote hosts. |
| `messages <1-5000>` | The maximum number of messages that the device will buffer during the delay period. |

**Default**

By default the system will buffer up to 2000 messages and wait 120 seconds from when syslog starts before attempting to filter and transmit the buffered messages to remote hosts.

**Mode**

Global Configuration

**Example**

To increase the delay to 180 seconds, use the commands:

```
awplus# configure terminal
awplus(config)# log host startup-delay delay 180
```

**Related commands**

default log host

log host (filter)

log host exclude

log host source

log host time

log trustpoint

show log config

**Command changes** Version 5.4.8-0.2: defaults changed

# log host time

**Overview** This command configures the time used in messages sent to a remote syslog server. If the syslog server is in a different time zone to your device then the time offset can be configured using either the **utc-offset** parameter option keyword or the **local-offset** parameter option keyword, where **utc-offset** is the time difference from UTC (Universal Time, Coordinated) and **local-offset** is the difference from local time.

**Syntax**

```
log host <email-address> time {local|local-offset|utc-offset
{plus|minus} <0-24>}
```

| Parameter | Description |
|---|---|
| *<email-address>* | The email address to send log messages to |
| `time` | Specify the time difference between the email recipient and the device you are configuring. |
| `local` | The device is in the same time zone as the email recipient |
| `local-offset` | The device is in a different time zone to the email recipient. Use the **plus** or **minus** keywords and specify the difference (offset) from local time of the device to the email recipient in hours. |
| `utc-offset` | The device is in a different time zone to the email recipient. Use the **plus** or **minus** keywords and specify the difference (offset) from UTC time of the device to the email recipient in hours. |
| `plus` | Negative offset (difference) from the device to the syslog server. |
| `minus` | Positive offset (difference) from the device to the syslog server. |
| *<0-24>* | World Time zone offset in hours |

**Default** The default is **local** time.

**Mode** Global Configuration

**Usage notes** Use the **local** option if the remote syslog server is in the same time zone as the device. Messages will display the time as on the local device when the message was generated.

Use the **offset** option if the email recipient is in a different time zone to this device. Specify the time offset of the remote syslog server in hours. Messages will display the time they were generated on this device but converted to the time zone of the remote syslog server.

**Examples** To send messages to the remote syslog server with the IP address `10.32.16.21` in the same time zone as the device's local time zone, use the following commands:

```
awplus# configure terminal
awplus(config)# log host 10.32.16.21 time local 0
```

To send messages to the remote syslog server with the IP address `10.32.16.12` with the time information converted to the time zone of the remote syslog server, which is 3 hours ahead of the device's local time zone, use the following commands:

```
awplus# configure terminal
awplus(config)# log host 10.32.16.12 time local-offset plus 3
```

To send messages to the remote syslog server with the IP address `10.32.16.02` with the time information converted to the time zone of the email recipient, which is 3 hours behind the device's UTC time zone, use the following commands:

```
awplus# configure terminal
awplus(config)# log host 10.32.16.02 time utc-offset minus 3
```

**Related commands**

default log host

log host

log host (filter)

log host exclude

log host source

show log config

# log monitor (filter)

**Overview** This command creates a filter to select messages to be sent to the terminal when the terminal monitor command is given. Selection can be based on the priority/severity of the message, the program that generated the message, the logging facility used, a sub-string within the message or a combination of some or all of these.

**Syntax**

```
log monitor [level <level>] [program <program-name>] [facility
<facility>] [msgtext <text-string>]
```

```
no log monitor [level <level>] [program <program-name>]
[facility <facility>] [msgtext <text-string>]
```

| Parameter | Description | |
|---|---|---|
| `level` | Filter messages by severity level. | |
| `<level>` | The minimum severity of message to send. The level can be specified as one of the following numbers or level names, where 0 is the highest severity and 7 is the lowest severity: | |
| | `0\|emergencies` | System is unusable |
| | `1\|alerts` | Action must be taken immediately |
| | `2\|critical` | Critical conditions |
| | `3\|errors` | Error conditions |
| | `4\|warnings` | Warning conditions |
| | `5\|notices` | Normal, but significant, conditions |
| | `6\|informational` | Informational messages |
| | `7\|debugging` | Debug-level messages |
| `program` | Filter messages by program. Include messages from a specified program. | |
| `<program-name>` | The name of a program to log messages from. You can enter either one of the following predefined program names (depending on your device model), or another program name that you find in the log output. The pre-defined names are not case sensitive but other program names from the log output are. | |
| | `rip` | Routing Information Protocol (RIP) |
| | `ripng` | Routing Information Protocol - next generation (RIPng) |
| | `ospf` | Open Shortest Path First (OSPF) |
| | `ospfv3` | Open Shortest Path First (OSPF) version 3 (OSPFv3) |
| | `bgp` | Border Gateway Protocol (BGP) |
| | `rsvp` | Resource Reservation Protocol (RSVP) |
| | `pim-dm` | Protocol Independent Multicast - Dense Mode (PIM-DM) |
| | `pim-sm` | Protocol Independent Multicast - Sparse Mode (PIM-SM) |
| | `pim-smv6` | PIM-SM version 6 (PIM-SMv6) |

| Parameter | Description | |
|---|---|---|
| | dot1x | IEEE 802.1X Port-Based Access Control |
| | lacp | Link Aggregation Control Protocol (LACP) |
| | stp | Spanning Tree Protocol (STP) |
| | rstp | Rapid Spanning Tree Protocol (RSTP) |
| | mstp | Multiple Spanning Tree Protocol (MSTP) |
| | imi | Integrated Management Interface (IMI) |
| | imish | Integrated Management Interface Shell (IMISH) |
| | epsr | Ethernet Protection Switched Rings (EPSR) |
| | irdp | ICMP Router Discovery Protocol (IRDP) |
| | rmon | Remote Monitoring |
| | loopprot | Loop Protection |
| | poe | Power-inline (Power over Ethernet) |
| | dhcpsn | DHCP snooping (DHCPSN) |
| facility | Filter messages by syslog facility. | |
| *<facility>* | Specify one of the following syslog facilities to include messages from: | |
| | kern | Kernel messages |
| | user | Random user-level messages |
| | mail | Mail system |
| | daemon | System daemons |
| | auth | Security/authorization messages |
| | syslog | Messages generated internally by syslogd |
| | lpr | Line printer subsystem |
| | news | Network news subsystem |
| | uucp | UUCP subsystem |
| | cron | Clock daemon |
| | authpriv | Security/authorization messages (private) |
| | ftp | FTP daemon |
| msgtext | Select messages containing a certain text string. | |
| *<text-string>* | A text string to match (maximum 128 characters). This is case sensitive, and must be the last text on the command line. | |

**Default** By default there is a filter to select all messages. This filter may be removed and replaced by filters that are more selective.

**Mode** Global Configuration

**Examples**

To create a filter to send all messages that are generated by authentication and have a severity of **info** or higher to terminal instances where the terminal monitor command has been given, use the following commands:

```
awplus# configure terminal
awplus(config)# log monitor level info program auth
```

To remove a default filter that includes sending everything to the terminal, use the following commands:

```
awplus# configure terminal
awplus(config)# no log monitor level debugging
```

**Related commands**

default log monitor

log monitor exclude

show log config

terminal monitor

# log monitor exclude

**Overview** Use this command to prevent specified log messages from being displayed on a terminal, when terminal monitor is enabled. You can exclude messages on the basis of:

- the priority/severity of the message
- the program that generated the message
- the logging facility used
- a sub-string within the message, or
- a combination of some or all of these.

Use the **no** variant of this command to stop excluding the specified messages.

**Syntax**

```
log console exclude [level <level>] [program <program-name>]
[facility <facility>] [msgtext <text-string>]
```

```
no log console exclude [level <level>] [program <program-name>]
[facility <facility>] [msgtext <text-string>]
```

| Parameter | Description | |
|---|---|---|
| `level` | Exclude messages of the specified severity level. | |
| *<level>* | The severity level to exclude. The level can be specified as one of the following numbers or level names, where 0 is the highest severity and 7 is the lowest severity: | |
| | `0\|emergencies` | System is unusable |
| | `1\|alerts` | Action must be taken immediately |
| | `2\|critical` | Critical conditions |
| | `3\|errors` | Error conditions |
| | `4\|warnings` | Warning conditions |
| | `5\|notices` | Normal, but significant, conditions |
| | `6\|informational` | Informational messages |
| | `7\|debugging` | Debug-level messages |
| `program` | Exclude messages from a specified program. | |
| *<program-name>* | The name of a program. You can enter either one of the following predefined program names (depending on your device model), or another program name that you find in the log output. The pre-defined names are not case sensitive but other program names from the log output are. | |
| | `rip` | Routing Information Protocol (RIP) |
| | `ripng` | Routing Information Protocol - next generation (RIPng) |
| | `ospf` | Open Shortest Path First (OSPF) |
| | `ospfv3` | Open Shortest Path First (OSPF) version 3 (OSPFv3) |

| Parameter | Description | |
|---|---|---|
| | `bgp` | Border Gateway Protocol (BGP) |
| | `rsvp` | Resource Reservation Protocol (RSVP) |
| | `pim-dm` | Protocol Independent Multicast - Dense Mode (PIM-DM) |
| | `pim-sm` | Protocol Independent Multicast - Sparse Mode (PIM-SM) |
| | `pim-smv6` | PIM-SM version 6 (PIM-SMv6) |
| | `dot1x` | IEEE 802.1X Port-Based Access Control |
| | `lacp` | Link Aggregation Control Protocol (LACP) |
| | `stp` | Spanning Tree Protocol (STP) |
| | `rstp` | Rapid Spanning Tree Protocol (RSTP) |
| | `mstp` | Multiple Spanning Tree Protocol (MSTP) |
| | `imi` | Integrated Management Interface (IMI) |
| | `imish` | Integrated Management Interface Shell (IMISH) |
| | `epsr` | Ethernet Protection Switched Rings (EPSR) |
| | `irdp` | ICMP Router Discovery Protocol (IRDP) |
| | `rmon` | Remote Monitoring |
| | `loopprot` | Loop Protection |
| | `poe` | Power-inline (Power over Ethernet) |
| | `dhcpsn` | DHCP snooping (DHCPSN) |
| `facility` | Exclude messages from a syslog facility. | |
| *<facility>* | Specify one of the following syslog facilities to exclude messages from: | |
| | `kern` | Kernel messages |
| | `user` | Random user-level messages |
| | `mail` | Mail system |
| | `daemon` | System daemons |
| | `auth` | Security/authorization messages |
| | `syslog` | Messages generated internally by syslogd |
| | `lpr` | Line printer subsystem |
| | `news` | Network news subsystem |
| | `uucp` | UUCP subsystem |
| | `cron` | Clock daemon |
| | `authpriv` | Security/authorization messages (private) |
| | `ftp` | FTP daemon |

| Parameter | Description |
|---|---|
| `msgtext` | Exclude messages containing a certain text string. |
| *<text-string>* | A text string to match (maximum 128 characters). This is case sensitive, and must be the last text on the command line. |

**Default** No log messages are excluded

**Mode** Global configuration

**Example** To remove messages that contain the string "example of irrelevant message", use the following commands:

```
awplus# configure terminal
awplus(config)# log monitor exclude msgtext example of
irrelevant message
```

**Related commands**

default log monitor

log monitor (filter)

show log config

terminal monitor

# log permanent

**Overview**

This command configures the device to send permanent log messages to non-volatile storage (NVS) on the device. The content of the permanent log is retained over a reboot. Once the permanent log reaches its configured maximum allowable size old messages will be deleted to make way for new messages.

The **no** variant of this command configures the device not to send any messages to the permanent log. Log messages will not be retained over a restart.

**Syntax**

```
log permanent
no log permanent
```

**Mode**

Global Configuration

**Examples**

To enable permanent logging use the following commands:

```
awplus# configure terminal
awplus(config)# log permanent
```

To disable permanent logging use the following commands:

```
awplus# configure terminal
awplus(config)# no log permanent
```

**Related commands**

clear log permanent

copy permanent-log

default log permanent

log permanent (filter)

log permanent exclude

log permanent size

show log config

show log permanent

# log permanent (filter)

**Overview** This command creates a filter to select messages to be sent to the permanent log. Selection can be based on the priority/ severity of the message, the program that generated the message, the logging facility used, a sub-string within the message or a combination of some or all of these.

The **no** variant of this command removes the corresponding filter, so that the specified messages are no longer sent to the permanent log.

**Syntax**

```
log permanent [level <level>] [program <program-name>]
[facility <facility>] [msgtext <text-string>]
```

```
no log permanent [level <level>] [program <program-name>]
[facility <facility>] [msgtext <text-string>]
```

| Parameter | Description | |
|---|---|---|
| `level` | Filter messages sent to the permanent log by severity level. | |
| *<level>* | The minimum severity of message to send. The level can be specified as one of the following numbers or level names, where 0 is the highest severity and 7 is the lowest severity: | |
| | `0\|emergencies` | System is unusable |
| | `1\|alerts` | Action must be taken immediately |
| | `2\|critical` | Critical conditions |
| | `3\|errors` | Error conditions |
| | `4\|warnings` | Warning conditions |
| | `5\|notices` | Normal, but significant, conditions |
| | `6\|informational` | Informational messages |
| | `7\|debugging` | Debug-level messages |
| `program` | Filter messages by program. Include messages from a specified program. | |
| *<program-name>* | The name of a program to log messages from. You can enter either one of the following predefined program names (depending on your device model), or another program name that you find in the log output. The pre-defined names are not case sensitive but other program names from the log output are. | |
| | `rip` | Routing Information Protocol (RIP) |
| | `ripng` | Routing Information Protocol - next generation (RIPng) |
| | `ospf` | Open Shortest Path First (OSPF) |
| | `ospfv3` | Open Shortest Path First (OSPF) version 3 (OSPFv3) |
| | `bgp` | Border Gateway Protocol (BGP) |
| | `rsvp` | Resource Reservation Protocol (RSVP) |
| | `pim-dm` | Protocol Independent Multicast - Dense Mode (PIM-DM) |
| | `pim-sm` | Protocol Independent Multicast - Sparse Mode (PIM-SM) |

| Parameter | Description | |
|---|---|---|
| | `pim-smv6` | PIM-SM version 6 (PIM-SMv6) |
| | `dot1x` | IEEE 802.1X Port-Based Access Control |
| | `lacp` | Link Aggregation Control Protocol (LACP) |
| | `stp` | Spanning Tree Protocol (STP) |
| | `rstp` | Rapid Spanning Tree Protocol (RSTP) |
| | `mstp` | Multiple Spanning Tree Protocol (MSTP) |
| | `imi` | Integrated Management Interface (IMI) |
| | `imish` | Integrated Management Interface Shell (IMISH) |
| | `epsr` | Ethernet Protection Switched Rings (EPSR) |
| | `irdp` | ICMP Router Discovery Protocol (IRDP) |
| | `rmon` | Remote Monitoring |
| | `loopprot` | Loop Protection |
| | `poe` | Power-inline (Power over Ethernet) |
| | `dhcpsn` | DHCP snooping (DHCPSN) |
| `facility` | Filter messages by syslog facility. | |
| *<facility>* | Specify one of the following syslog facilities to include messages from: | |
| | `kern` | Kernel messages |
| | `user` | Random user-level messages |
| | `mail` | Mail system |
| | `daemon` | System daemons |
| | `auth` | Security/authorization messages |
| | `syslog` | Messages generated internally by syslogd |
| | `lpr` | Line printer subsystem |
| | `news` | Network news subsystem |
| | `uucp` | UUCP subsystem |
| | `cron` | Clock daemon |
| | `authpriv` | Security/authorization messages (private) |
| | `ftp` | FTP daemon |
| `msgtext` | Select messages containing a certain text string. | |
| *<text-string>* | A text string to match (maximum 128 characters). This is case sensitive, and must be the last text on the command line. | |

**Default** By default the buffered log has a filter to select messages whose severity level is `notices (5)` or higher. This filter may be removed using the **no** variant of this command.

**Mode** Global Configuration

**Examples** To create a filter to send all messages containing the text "`Bridging initialization`", to the permanent log use the following commands:

```
awplus# configure terminal
awplus(config)# log permanent msgtext Bridging initialization
```

**Related commands**

clear log permanent

default log permanent

log permanent

log permanent exclude

log permanent size

show log config

show log permanent

# log permanent exclude

**Overview** Use this command to prevent specified log messages from being sent to the permanent log. You can exclude messages on the basis of:

- the priority/severity of the message
- the program that generated the message
- the logging facility used
- a sub-string within the message, or
- a combination of some or all of these.

Use the **no** variant of this command to stop excluding the specified messages.

**Syntax**

```
log permanent exclude [level <level>] [program <program-name>]
[facility <facility>] [msgtext <text-string>]
```

```
no log permanent exclude [level <level>] [program
<program-name>] [facility <facility>] [msgtext <text-string>]
```

| Parameter | Description | |
|---|---|---|
| `level` | Exclude messages of the specified severity level. | |
| `<level>` | The severity level to exclude. The level can be specified as one of the following numbers or level names, where 0 is the highest severity and 7 is the lowest severity: | |
| | `0\|emergencies` | System is unusable |
| | `1\|alerts` | Action must be taken immediately |
| | `2\|critical` | Critical conditions |
| | `3\|errors` | Error conditions |
| | `4\|warnings` | Warning conditions |
| | `5\|notices` | Normal, but significant, conditions |
| | `6\|informational` | Informational messages |
| | `7\|debugging` | Debug-level messages |
| `program` | Exclude messages from a specified program. | |
| `<program-name>` | The name of a program. You can enter either one of the following predefined program names (depending on your device model), or another program name that you find in the log output. The pre-defined names are not case sensitive but other program names from the log output are. | |
| | `rip` | Routing Information Protocol (RIP) |
| | `ripng` | Routing Information Protocol - next generation (RIPng) |
| | `ospf` | Open Shortest Path First (OSPF) |
| | `ospfv3` | Open Shortest Path First (OSPF) version 3 (OSPFv3) |
| | `bgp` | Border Gateway Protocol (BGP) |

| Parameter | Description | |
|---|---|---|
| | `rsvp` | Resource Reservation Protocol (RSVP) |
| | `pim-dm` | Protocol Independent Multicast - Dense Mode (PIM-DM) |
| | `pim-sm` | Protocol Independent Multicast - Sparse Mode (PIM-SM) |
| | `pim-smv6` | PIM-SM version 6 (PIM-SMv6) |
| | `dot1x` | IEEE 802.1X Port-Based Access Control |
| | `lacp` | Link Aggregation Control Protocol (LACP) |
| | `stp` | Spanning Tree Protocol (STP) |
| | `rstp` | Rapid Spanning Tree Protocol (RSTP) |
| | `mstp` | Multiple Spanning Tree Protocol (MSTP) |
| | `imi` | Integrated Management Interface (IMI) |
| | `imish` | Integrated Management Interface Shell (IMISH) |
| | `epsr` | Ethernet Protection Switched Rings (EPSR) |
| | `irdp` | ICMP Router Discovery Protocol (IRDP) |
| | `rmon` | Remote Monitoring |
| | `loopprot` | Loop Protection |
| | `poe` | Power-inline (Power over Ethernet) |
| | `dhcpsn` | DHCP snooping (DHCPSN) |
| `facility` | Exclude messages from a syslog facility. | |
| *<facility>* | Specify one of the following syslog facilities to exclude messages from: | |
| | `kern` | Kernel messages |
| | `user` | Random user-level messages |
| | `mail` | Mail system |
| | `daemon` | System daemons |
| | `auth` | Security/authorization messages |
| | `syslog` | Messages generated internally by syslogd |
| | `lpr` | Line printer subsystem |
| | `news` | Network news subsystem |
| | `uucp` | UUCP subsystem |
| | `cron` | Clock daemon |
| | `authpriv` | Security/authorization messages (private) |
| | `ftp` | FTP daemon |
| `msgtext` | Exclude messages containing a certain text string. | |
| *<text-string>* | A text string to match (maximum 128 characters). This is case sensitive, and must be the last text on the command line. | |

**Default** No log messages are excluded

**Mode** Global configuration

**Example** To remove messages that contain the string “example of irrelevant message”, use the following commands:

```
awplus# configure terminal
awplus(config)# log permanent exclude msgtext example of
irrelevant message
```

**Related commands**

clear log permanent

default log permanent

log permanent

log permanent (filter)

log permanent size

show log config

show log permanent

# log permanent size

**Overview** This command configures the amount of memory that the permanent log is permitted to use. Once this memory allocation has been filled old messages will be deleted to make room for new messages.

Use the **no** variant of this command to return to the default.

**Syntax**

```
log permanent size <50-250>
no log permanent size
```

| Parameter | Description |
|---|---|
| *<50-250>* | Size of the permanent log in kilobytes |

**Default** 50 kilobytes

**Mode** Global Configuration

**Example** To allow the permanent log to use up to 100 kilobytes of NVS, use the commands:

```
awplus# configure terminal
awplus(config)# log permanent size 100
```

To return to the default value, use the commands:

```
awplus# configure terminal
awplus(config)# no log permanent size
```

**Related commands**

clear log permanent

copy permanent-log

default log permanent

log permanent

log permanent (filter)

log permanent exclude

show log config

show log permanent

# log-rate-limit nsm

**Overview**

This command limits the number of log messages generated by the device for a specified time interval.

Use the **no** variant of this command to revert to the default number of log messages, which is up to 200 log messages per second.

**Syntax**

```
log-rate-limit nsm messages <message-limit> interval
<time-interval>
```

```
no log-rate-limit nsm
```

| Parameter | Description |
|---|---|
| *<message-limit>* | <1-65535><br>The number of log messages generated by the device. |
| *<time-interval>* | <0-65535><br>The time period for log message generation in 1/100 seconds. If an interval of 0 is specified then no log message rate limiting is applied. |

**Default**

By default, the device will allow 200 log messages to be generated per second.

**Mode**

Global Configuration

**Usage notes**

This command limits the rate that log messages are generated. Limiting log messages protects the device from running out of memory in extreme conditions, such as during a broadcast storm.

Once the specified number of log messages per interval is exceeded, any excess log messages are dropped. When this occurs a summary log message is generated at the end of the interval. This summary message includes the number of log messages dropped.

If you expect a lot of dropped log messages, we recommend setting the time interval to no less than 100. This limits the number of summary messages to one per second, which prevents the log from filling up with these summary messages.

**Examples**

To allow the device to generate a maximum of 300 log messages per second, use the following commands:

```
awplus# configure terminal
awplus(config)# log-rate-limit nsm messages 300 interval 100
```

To return the device to the default setting, use the following commands:

```
awplus# configure terminal
awplus(config)# no log-rate-limit nsm
```

# log trustpoint

**Overview**

This command adds one or more trustpoints to be used with the syslog application. Multiple trustpoints may be specified, or the command may be executed multiple times, to add multiple trustpoints to the application.

The **no** version of this command removes one or more trustpoints from the list of trustpoints associated with the application.

**Syntax**

```
log trustpoint [<trustpoint-list>]
no log trustpoint [<trustpoint-list>]
```

| Parameter | Description |
|---|---|
| *<trustpoint-list>* | Specify one or more trustpoints to be added or deleted. |

**Default**

No trustpoints are created by default.

**Mode**

Global Configuration

**Usage notes**

The device certificate associated with first trustpoint added to the application will be transmitted to remote servers. The certificate received from the remote server must have an issuer chain that terminates with the root CA certificate for any of the trustpoints that are associated with the application.

If no trustpoints are specified in the command, the trustpoint list will be unchanged.

If **no log trustpoint** is issued without specifying any trustpoints, then all trustpoints will be disassociated from the application.

**Example**

You can add multiple trustpoints by executing the command multiple times:

```
awplus# configure terminal
awplus(config)# log trustpoint trustpoint_1
awplus(config)# log trustpoint trustpoint_2
```

Alternatively, add multiple trustpoints with a single command:

```
awplus(config)# log trustpoint trustpoint_2 trustpoint_3
```

Disassociate all trustpoints from the syslog application using the command:

```
awplus(config)# log trustpoint trustpoint_2 trustpoint_3
```

**Related commands**

log host

show log config

# log url-requests

**Overview**

If URL Filtering is enabled, then by default, black list hits and issues with match criteria and list files are logged.

Use this command to enable logging of all HTTP and HTTPS URL requests (both permitted and denied) passing through the firewall.

Use the **no** variant of this command to disable extra logging of HTTP and HTTPS URL requests passing through the firewall.

**Syntax**

```
log url-requests
no log url-requests
```

**Default**

Disabled by default.

**Mode**

URL Filter Configuration

**Usage notes**

When enabled, additional log messages for HTTP and HTTPS URL requests passing through the firewall contain the:

- URL being accessed
- IP address of the user that requested the URL

**Example**

To configure logging of all HTTP and HTTPS URL requests passing through the firewall (permitted as well as denied), use the following commands:

```
awplus# configure terminal
awplus(config)# url-filter
awplus(config-url-filter)# log url-requests
```

**Related commands**

url-filter

**Command changes**

Version 5.4.7-1.1: command added

# show connection-log events

**Overview** This command displays the configuration state (enabled or disabled) for the logging of connections passing through the firewall, as configured by the connection-log events command.

**Syntax**

```
show connection-log events
```

**Mode** User Exec

**Example** To show the logging configuration state for the connections passing through the firewall, use the command:

```
awplus# show connection-log events
```

**Output** Figure 10-1: Example output from **show connection-log events**

```
awplus#show connection-log events
Log new connection events:    Disabled
Log connection end events:    Enabled
```

**Related commands** connection-log events

**Command changes** Version 5.4.7-1.1: command added.

# show counter log

**Overview** This command displays log counter information.

**Syntax** `show counter log`

**Mode** User Exec and Privileged Exec

**Example** To display the log counter information, use the command:

```
awplus# show counter log
```

**Output** Figure 10-2: Example output from the **show counter log** command

```
Log counters
Total Received        ......... 2328
Total Received P0     ......... 0
Total Received P1     ......... 0
Total Received P2     ......... 1
Total Received P3     ......... 9
Total Received P4     ......... 32
Total Received P5     ......... 312
Total Received P6     ......... 1602
Total Received P7     ......... 372
```

**Table 11:** Parameters in output of the **show counter log** command

| Parameter | Description |
|---|---|
| `Total Received` | Total number of messages received by the log |
| `Total Received P0` | Total number of Priority 0 (Emergency) messages received |
| `Total Received P1` | Total number of Priority 1 (Alert) messages received |
| `Total Received P2` | Total number of Priority 2 (Critical) messages received |
| `Total Received P3` | Total number of Priority 3 (Error) messages received |
| `Total Received P4` | Total number of Priority 4 (Warning) messages received |
| `Total Received P5` | Total number of Priority 5 (Notice) messages received |
| `Total Received P6` | Total number of Priority 6 (Info) messages received |
| `Total Received P7` | Total number of Priority 7 (Debug) messages received |

**Related commands** show log config

# show exception log

**Overview** This command displays the contents of the exception log.

**Syntax** `show exception log`

**Mode** User Exec and Privileged Exec

**Example** To display the exception log, use the command:

```
awplus# show exception log
```

**Output** Figure 10-3: Example output from the **show exception log** command on a device

```
awplus#show exception log

<date> <time> <facility>.<severity> <program[<pid>]>: <message>
-----------------------------------------------------------------------
2019 Sep 29 06:07:24 local7.debug awplus corehandler : Process imi (PID:775) signal
5, core dumped to /flash/imi-example-5.4.9-1.4-1-1569737243-775.tgz
-----------------------------------------------------------------------
```

**Output** Figure 10-4: Example output from the **show exception log** command on a device that has never had an exception occur

```
awplus#show exception log
<date> <time> <facility>.<severity> <program[<pid>]>: <message>
-----------------------------------------------------------------------
None
-----------------------------------------------------------------------
awplus#
```

# show log

**Overview** This command displays the contents of the buffered log.

For information on filtering and saving command output, see the "Getting Started with AlliedWare_Plus" Feature Overview and Configuration Guide.

**Syntax**

```
show log [tail [<10-250>]]
```

| Parameter | Description |
|---|---|
| `tail` | Display only the latest log entries. |
| *<10-250>* | Specify the number of log entries to display. |

**Default** By default the entire contents of the buffered log is displayed.

**Mode** User Exec, Privileged Exec and Global Configuration

**Usage notes** If the optional **tail** parameter is specified, only the latest 10 messages in the buffered log are displayed. A numerical value can be specified after the **tail** parameter to select how many of the latest messages should be displayed.

The **show log** command is only available to users at privilege level 7 and above. To set a user's privilege level, use the command:

```
awplus(config)# username <name> privilege <1-15>
```

**Examples** To display the contents of the buffered log use the command:

```
awplus# show log
```

To display the 10 latest entries in the buffered log use the command:

```
awplus# show log tail 10
```

**Output** Figure 10-5: Example output from **show log**

```
awplus#show log

<date> <time> <facility>.<severity> <program[<pid>]>: <message>
-----------------------------------------------------------------------
2019 May 29 07:55:22 kern.notice awplus kernel: Linux version 2.6.32.12-at1 (mak
er@awpmaker03-dl) (gcc version 4.3.3 (Gentoo 4.3.3-r3 p1.2, pie-10.1.5) ) #1 Wed
 Dec 8 11:53:40 NZDT 2010
2019 May 29 07:55:22 kern.warning awplus kernel: No pci config register base in
dev tree, using default
2019 May 29 07:55:23 kern.notice awplus kernel: Kernel command line: console=tty
S0,9600 releasefile= ramdisk=14688 bootversion=1.1.0-rc12 loglevel=1
extraflash=00000000
2019 May 29 07:55:25 kern.notice awplus kernel: RAMDISK: squashfs filesystem fou
nd at block 0
2019 May 29 07:55:28 kern.warning awplus kernel: ipifwd: module license 'Proprie
tary' taints kernel.
...
```

**Related commands**

clear log buffered

copy buffered-log

default log buffered

log buffered

log buffered (filter)

log buffered size

log buffered exclude

show log config

# show log config

**Overview** This command displays information about the logging system. This includes the configuration of the various log destinations, such as buffered, permanent, syslog servers (hosts) and email addresses. This also displays the latest status information for each log destination.

**Syntax** `show log config`

**Mode** User Exec, Privileged Exec and Global Configuration

**Example** To display the logging configuration use the command:

```
awplus# show log config
```

**Output** Figure 10-6: Example output from **show log config**

```
Facility: default

PKI trustpoints: example_trustpoint

Buffered log:
 Status ......... enabled
  Maximum size ... 100kb
  Filters:
 *1 Level ........ notices
    Program ...... any
    Facility ..... any
    Message text . any
  2 Level ........ informational
    Program ...... auth
    Facility ..... daemon
    Message text . any
  Statistics ..... 1327 messages received, 821 accepted by filter (2016 Oct 11
10:36:16)
Permanent log:
  Status ......... enabled
  Maximum size ... 60kb
  Filters:
  1 Level ........ error
    Program ...... any
    Facility ..... any
    Message text . any
 *2 Level ........ warnings
    Program ...... dhcp
    Facility ..... any
    Message text . "pool exhausted"
  Statistics ..... 1327 messages received, 12 accepted by filter (2016 Oct 11
10:36:16)
```

```
Host 10.32.16.21:
  Time offset .... +2:00
  Offset type .... UTC
  Source ......... -
  Secured ........ enabled
  Filters:
  1 Level ........ critical
    Program ...... any
    Facility ..... any
    Message text . any
  Statistics ..... 1327 messages received, 1 accepted by filter (2016 Oct 11
10:36:16)
Email admin@alliedtelesis.com:
  Time offset .... +0:00
  Offset type .... Local
  Filters:
  1 Level ........ emergencies
    Program ...... any
    Facility ..... any
    Message text . any
  Statistics ..... 1327 messages received, 0 accepted by filter (2016 Oct 11
10:36:16)
...
```

In the above example the '*' next to filter 1 in the buffered log configuration indicates that this is the default filter. The permanent log has had its default filter removed, so none of the filters are marked with '*'.

***NOTE:*** *Terminal log and console log cannot be set at the same time. If console logging is enabled then the terminal logging is turned off.*

**Related commands**

show counter log

show log

show log permanent

# show log external

**Overview**

Use this command to display the contents of the external log, which is stored on an SD card or USB storage device.

Use this command to display the contents of the external log, which is stored on an SD card.

Use this command to display the contents of the external log, which is stored on a USB storage device.

**Syntax**

```
show log external [tail [<10-250>]]
```

| Parameter | Description |
|---|---|
| `tail` | Display only the latest log entries. |
| *<10-250>* | Specify the number of log entries to display. |

**Mode**

Global Configuration

Privileged Exec

User Exec

**Usage notes**

If the optional **tail** parameter is specified, only the latest 10 messages in the permanent log are displayed. A numerical value can be specified after the **tail** parameter to change how many of the latest messages should be displayed.

**Example**

To display the last 5 entries in the external log, use the command:

```
awplus# show log external tail 5
```

**Related commands**

clear log external

default log external

log external

log external (filter)

log external exclude

log external rotate

log external size

show log config

unmount

**Command changes**

Version 5.4.7-1.1: command added

# show log permanent

**Overview** This command displays the contents of the permanent log.

**Syntax** `show log permanent [tail [<10-250>]]`

| Parameter | Description |
|---|---|
| `tail` | Display only the latest log entries. |
| *<10-250>* | Specify the number of log entries to display. |

**Usage notes** If the optional **tail** parameter is specified, only the latest 10 messages in the permanent log are displayed. A numerical value can be specified after the **tail** parameter to change how many of the latest messages should be displayed.

**Mode** User Exec, Privileged Exec and Global Configuration

**Example** To display the permanent log, use the command:

```
awplus# show log permanent
```

**Output** Figure 10-7: Example output from **show log permanent**

```
awplus#show log permanent

<date> <time> <facility>.<severity> <program[<pid>]>: <message>
-----------------------------------------------------------------------
2014 Jun 10 09:30:09 syslog.notice syslog-ng[67]: syslog-ng starting up;
version=\'2.0rc3\'
2014 Jun 10 09:30:09 auth.warning portmap[106]: user rpc not found, reverting to
user bin
2014 Jun 10 09:30:09 cron.notice crond[116]: crond 2.3.2 dillon, started, log
level 8
2014 Jun 10 09:30:14 daemon.err snmpd[181]: /flash/.configs/snmpd.conf: line 20:
Error: bad SUBTREE object
2014 Jun 10 09:30:14 user.info HSL[192]: HSL: INFO: Registering port port1.0.1
```

**Related commands**

clear log permanent

copy permanent-log

default log permanent

log permanent

log permanent (filter)

log permanent exclude

log permanent size

show log config

# show running-config log

**Overview** This command displays the current running configuration of the Log utility.

**Syntax**

```
show running-config log
```

**Mode** Privileged Exec and Global Configuration

**Example** To display the current configuration of the log utility, use the command:

```
awplus# show running-config log
```

**Related commands**

show log

show log config

# unmount

**Overview** Use this command to unmount an external storage device. We recommend you unmount storage devices before removing them, to avoid file corruption. This is especially important if files may be automatically written to the storage device, such as external log files or AMF backup files.

**Syntax**

```
unmount card
unmount usb
```

| Parameter | Description |
|---|---|
| `card` | Unmount the SD card. |
| `usb` | Unmount the USB storage device. |

**Mode** Privileged Exec

**Example** To unmount an SD card and safely remove it from the device, use the command:

```
awplus# unmount card
```

To unmount a USB storage device and safely remove it from the device, use the command:

```
awplus# unmount usb
```

**Related commands**

clear log external

log external

show file systems

show log config

show log external

**Command changes** Version 5.4.7-1.1: command added

# 11 Scripting Commands

## Introduction

**Overview** This chapter provides commands used for command scripts.

**Command List**


- "activate" on page 444
- "echo" on page 445
- "wait" on page 446

# activate

**Overview** This command activates a script file.

**Syntax** `activate [background] <script>`

| Parameter | Description |
|---|---|
| `background` | Activate a script to run in the background. A process that is running in the background will operate as a separate task, and will not interrupt foreground processing. Generally, we recommend running short, interactive scripts in the foreground and longer scripts in the background. The default is to run the script in the foreground. |
| `<script>` | The file name of the script to activate. The script is a command script consisting of commands documented in this software reference. Note that you must use either a **.scp** or a **.sh** filename extension for a valid script text file, as described below in the usage section for this command. |

**Mode** Privileged Exec

**Usage notes** When a script is activated, the privilege level is set to 1 enabling User Exec commands to run in the script. If you need to run Privileged Exec commands in your script you need to add an enable (Privileged Exec mode) command to the start of your script. If you need to run Global Configuration commands in your script you need to add a configure terminal command after the **enable** command at the start of your script.

The **activate** command executes the script in a new shell. A terminal length shell command, such as **terminal length 0** may also be required to disable a delay that would pause the display.

A script must be a text file with a filename extension of either **.sh** or **.scp** only for the AlliedWare Plus™ CLI to activate the script file. The **.sh** filename extension indicates the file is an ASH script, and the **.scp** filename extension indicates the file is an AlliedWare Plus™ script.

**Examples** To activate a command script to run as a background process, use the command:

```
awplus# activate background test.scp
```

**Related commands**

configure terminal

echo

enable (Privileged Exec mode)

wait

# echo

**Overview** This command echoes a string to the terminal, followed by a blank line.

**Syntax** `echo <line>`

| Parameter | Description |
|---|---|
| *<line>* | The string to echo |

**Mode** User Exec and Privileged Exec

**Usage** This command may be useful in CLI scripts, to make the script print user-visible comments.

**Example** To echo the string `Hello World` to the console, use the command:

```
awplus# echo Hello World
```

**Output**

```
Hello World
```

**Related commands** activate

wait

# wait

**Overview** This command pauses execution of the active script for the specified period of time.

**Syntax** `wait <delay>`

| Parameter | Description |
|---|---|
| *<delay>* | <1-65335> Specify the time delay in seconds |

**Default** No wait delay is specified by default.

**Mode** Privileged Exec (when executed from a script not directly from the command line)

**Usage notes** Use this command to pause script execution in an **.scp** (AlliedWare Plus™ script) or an **.sh** (ASH script) file executed by the activate command. The script must contain an **enable** command, because the **wait** command is only executed in the Privileged Exec mode.

**Example** See an **.scp** script file extract below that will show port counters for interface port1.0.2 over a 10 second interval:

```
enable

show interface port1.0.2

wait 10

show interface port1.0.2
```

**Related commands** activate

echo

enable (Privileged Exec mode)

# 12 Interface Commands

## Introduction

**Overview** This chapter provides an alphabetical reference of commands used to configure and display interfaces.

**Command List**


- "description (interface)" on page 448
- "interface (to configure)" on page 449
- "ip tcp adjust-mss" on page 451
- "ipv6 tcp adjust-mss" on page 453
- "mru jumbo" on page 455
- "mtu" on page 456
- "service statistics interfaces counter" on page 458
- "show interface" on page 459
- "show interface brief" on page 463
- "show interface memory" on page 464
- "show interface status" on page 466
- "shutdown" on page 468

# description (interface)

**Overview** Use this command to add a description to a specific port or interface.

**Syntax** `description <description>`

| Parameter | Description |
|---|---|
| *<description>* | Text describing the specific interface. Descriptions can contain any printable ASCII characters (ASCII 32-126). |

**Mode** Interface Configuration

**Example** The following example uses this command to describe the device that an interface is connected to.

```
awplus# configure terminal
awplus(config)# interface port1.0.2
awplus(config-if)# description Boardroom PC
```

**Command changes** Version 5.4.7-1.1: valid character set changed to printable ASCII characters

# interface (to configure)

**Overview** Use this command to select one or more interfaces to configure.

**Syntax** `interface <interface-list>`

| Parameter | Description |
|---|---|
| *<interface-list>* | The interfaces to configure. An interface-list can be:<br>• a PPP interface (e.g. ppp0)<br>• an Eth interface (e.g. eth1)<br>• an 802.1Q Ethernet sub-interface (e.g. eth1.10, where '10' is the VLAN ID specified by the **encapsulation dot1q** command)<br>• a VLAN (e.g. vlan2)<br>• a switchport (e.g. port1.0.4)<br>• a static channel group (e.g. sa2)<br>• a dynamic (LACP) channel group (e.g. po2)<br>• a bridge interface (e.g. br0)<br>• a tunnel interface (e.g. tunnel0)<br>• a 3G cellular interface (e.g. cellular0)<br>• a WWAN interface (e.g wwan0)<br>• the loopback interface (lo)<br>• a continuous range of interfaces, separated by a hyphen (e.g. ppp2-4)<br>• a comma-separated list (e.g. ppp0,ppp2-4). Do not mix interface types in a list.<br>The specified interfaces must exist. |

**Usage notes** A local loopback interface is one that is always available for higher layer protocols to use and advertise to the network. Although a local loopback interface is assigned an IP address, it does not have the usual requirement of connecting to a lower layer physical entity. This lack of physical attachment creates the perception of a local loopback interface always being accessible via the network.

Local loopback interfaces can be utilized by a number of protocols for various purposes. They can be used to improve access to the device and also increase its reliability, security, scalability and protection. In addition, local loopback interfaces can add flexibility and simplify management, information gathering and filtering.

One example of this increased reliability is for OSPF to advertise a local loopback interface as an interface-route into the network irrespective of the physical links that may be 'up' or 'down' at the time. This provides a higher probability that the routing traffic will be received and subsequently forwarded.

**Mode** Global Configuration

**Examples**

The following example shows how to enter Interface mode to configure VLAN interface vlan1. Note how the prompt changes.

```
awplus# configure terminal
awplus(config)# interface vlan1
awplus(config-if)#
```

The following example shows how to enter Interface mode to configure the PPP interface ppp0.

```
awplus# configure terminal
awplus(config)# interface ppp0
awplus(config-if)#
```

The following example shows how to enter Interface mode to configure the local loopback interface.

```
awplus# configure terminal
awplus(config)# interface lo
awplus(config-if)#
```

The following example shows how to enter Interface mode to configure bridge br2.

```
awplus# configure terminal
awplus(config)# interface br2
awplus(config-if)#
```

**Related commands**

ip address (IP Addressing and Protocol)

show interface

show interface brief

# ip tcp adjust-mss

**Overview** Use this command to set the Maximum Segment Size (MSS) size for an interface, where MSS is the maximum TCP data packet size that the interface can transmit before fragmentation.

Use the **no** variant of this command to remove a previously specified MSS size for a PPP interface, and restore the default MSS size.

**Syntax**

```
ip tcp adjust-mss {<mss-size>|pmtu}
no ip tcp adjust-mss
```

| Parameter | Description |
|---|---|
| *<mss-size>* | <64-1460> Specifies the MSS size in bytes. |
| pmtu | Adjust TCP MSS automatically with respect to the MTU on the interface. |

**Default** The default setting allows a TCP server or a TCP client to set the MSS value for itself.

**Mode** Interface Configuration

**Usage notes** When a host initiates a TCP session with a server it negotiates the IP segment size by using the MSS option field in the TCP packet. The value of the MSS option field is determined by the Maximum Transmission Unit (MTU) configuration on the host.

You can set a feasible MSS value on the following interfaces:

- PPP
- Ethernet
- Tunnel
- VLAN

**Examples** To configure an MSS size of 1452 bytes on PPP interface ppp0, use the commands:

```
awplus# configure terminal
awplus(config)# interface ppp0
awplus(config-if)# ip tcp adjust-mss 1452
```

To configure an MSS size of 1452 bytes on Ethernet interface eth1, use the commands:

```
awplus# configure terminal
awplus(config)# interface eth1
awplus(config-if)# ip tcp adjust-mss 1452
```

To configure an MSS size of 1452 bytes on interface tunnel2, use the commands:

```
awplus# configure terminal
awplus(config)# interface tunnel2
awplus(config-if)# ip tcp adjust-mss 1452
```

To restore the MSS size to the default size on PPP interface ppp0, use the commands:

```
awplus# configure terminal
awplus(config)# interface ppp0
awplus(config-if)# no ip tcp adjust-mss
```

**Related commands**

mtu (PPP)

show interface

show interface (PPP)

show interface tunnel (GRE)

**Command changes**

Version 5.4.8-2.1: interface tunnel example added

# ipv6 tcp adjust-mss

**Overview** Use this command to set the IPv6 Maximum Segment Size (MSS) size for an interface, where MSS is the maximum TCP data packet size that the interface can transmit before fragmentation.

Use the **no** variant of this command to remove a previously specified MSS size for a PPP interface, and restore the default MSS size.

**Syntax**

```
ipv6 tcp adjust-mss {<mss-size>|pmtu}
no ipv6 tcp adjust-mss
```

| Parameter | Description |
|---|---|
| *<mss-size>* | <64-1460> Specifies the MSS size in bytes. |
| pmtu | Adjust TCP MSS automatically with respect to the MTU on the interface. |

**Default** The default setting allows a TCP server or a TCP client to set the MSS value for itself.

**Mode** Interface Configuration

**Usage notes** When a host initiates a TCP session with a server it negotiates the IP segment size by using the MSS option field in the TCP packet. The value of the MSS option field is determined by the Maximum Transmission Unit (MTU) configuration on the host.

You can set a feasible MSS value on the following interfaces:

- PPP
- Ethernet
- Tunnel
- VLAN

**Examples** To configure an IPv6 MSS size of 1452 bytes on PPP interface ppp0, use the commands:

```
awplus# configure terminal
awplus(config)# interface ppp0
awplus(config-if)# ipv6 tcp adjust-mss 1452
```

To configure an IPv6 MSS size of 1452 bytes on Ethernet interface eth1, use the commands:

```
awplus# configure terminal
awplus(config)# interface eth1
awplus(config-if)# ipv6 tcp adjust-mss 1452
```

To adjust IPv6 TCP MSS automatically with respect to the MTU on interface tunnel2, use the commands:

```
awplus# configure terminal
awplus(config)# interface tunnel2
awplus(config-if)# ipv6 tcp adjust-mss pmtu
```

To restore the MSS size to the default size on PPP interface ppp0, use the commands:

```
awplus# configure terminal
awplus(config)# interface ppp0
awplus(config-if)# no ipv6 tcp adjust-mss
```

**Related commands**

mtu (PPP)

show interface

show interface (PPP)

show interface tunnel (GRE)

**Command changes**

Version 5.4.8-2.1: interface tunnel example added

# mru jumbo

**Overview**

Use this command to enable the device to forward jumbo frames. For more information, see the Switching Feature Overview and Configuration Guide.

When jumbo frame support is enabled, the maximum size of packets that the device can forward is 9688 bytes of payload.

Use the **no** variant of this command to remove jumbo frame support, and restore the default MRU size (1500 bytes) for switch ports.

***NOTE:*** *The number above specifies the payload only. For an IEEE 802.1q frame, provision is made (internally) for the following additional components:*

- Source and Destination addresses
- EtherType field
- Priority and VLAN tag fields
- FCS

*These additional components increase the frame size (to 1522 bytes in the default case).*

**Syntax**

```
mru jumbo
no mru
```

**Default**

By default, jumbo frame support is not enabled.

**Mode**

Interface Configuration for switch ports.

**Usage notes**

Note that show interface output will only show MRU size for switch ports.

We recommend limiting the number of ports with jumbo frames support enabled to two.

**Examples**

To enable the device to forward jumbo frames on port1.0.2, use the commands:

```
awplus# configure terminal
awplus(config)# interface port1.0.2
awplus(config-if)# mru jumbo
```

To remove the jumbo frame support, and therefore restore the MRU size of 1500 bytes on port1.0.2, use the commands:

```
awplus# configure terminal
awplus(config)# interface port1.0.2
awplus(config-if)# no mru
```

**Related commands**

show interface

# mtu

**Overview** Use this command to set the Maximum Transmission Unit (MTU) size for interfaces, where MTU is the maximum packet size that interfaces can transmit. The MTU size setting is applied to both IPv4 and IPv6 packet transmission.

Use the **no** variant of this command to remove a previously specified Maximum Transmission Unit (MTU) size, and restore the default MTU size. For example the VLAN interface default is 1500 bytes.

**Syntax**

```
mtu <68-1582>
no mtu
```

**Default** The default MTU size, for example 1500 bytes for VLAN interfaces.

**Mode** Interface Configuration

**Usage notes** If a device receives an IPv4 packet for Layer 3 switching to another interface with an MTU size smaller than the packet size, and if the packet has the '**don't fragment**' bit set, then the device will send an ICMP '**destination unreachable**' (3) packet type and a '**fragmentation needed and DF set**' (4) code back to the source. For IPv6 packets bigger than the MTU size of the transmitting interface, an ICMP '**packet too big**' (ICMP type 2 code 0) message is sent to the source.

You can set an MTU value on the following interfaces:

- PPP
- Ethernet
- Tunnel
- VLAN

Note that you cannot configure MTU on bridge interfaces. The MTU of the bridge interface is determined by the member interface of the bridge which has the lowest MTU. For example, if you attach eth1 with MTU 1200, ppp1 with MTU 1400, and vlan1 with MTU 1500 to a bridge interface, the MTU for that interface will be 1200.

Note that show interface output will only show MTU size for VLAN interfaces.

**Examples** To configure an MTU size of 1555 bytes on vlan2, use the commands:

```
awplus# configure terminal
awplus(config)# interface vlan2
awplus(config-if)# mtu 1555
```

To configure an MTU size of 1555 bytes for tunnel 'tunnel2', use the commands:

```
awplus# configure terminal
awplus(config)# interface tunnel2
awplus(config-if)# mtu 1555
```

To restore the MTU size to the default MTU size of 1500 bytes on vlan2, use the commands:

```
awplus# configure terminal
awplus(config)# interface vlan2
awplus(config-if)# no mtu
```

**Related commands**

show interface

# service statistics interfaces counter

**Overview** Use this command to enable the interface statistics counter.

Use the **no** variant of this command to disable the interface statistics counter.

**Syntax**

```
service statistics interfaces counter
no service statistics interfaces counter
```

**Default** The interface statistics counter is enabled by default.

**Mode** Global Configuration

**Example** To enable the interface statistics counter, use the following commands:

```
awplus# configure terminal
awplus(config)# service statistics interfaces counter
```

To disable the interface statistics counter, use the following commands:

```
awplus# configure terminal
awplus(config)# no service statistics interfaces counter
```

**Command changes** Version 5.4.7-2.1: command added

# show interface

**Overview** Use this command to display interface configuration and status.

For information on filtering and saving command output, see the "Getting Started with AlliedWare Plus" Feature Overview and Configuration Guide.

**Syntax** `show interface [<interface-list>]`

| Parameter | Description |
|---|---|
| `<interface-list>` | The interfaces or ports to display. An interface-list can be:<br>• a PPP interface (e.g. ppp0)<br>• an Eth interface (e.g. eth1)<br>• an 802.1Q Ethernet sub-interface (e.g. eth1.10, where '10' is the VLAN ID specified by the **encapsulation dot1q** command)<br>• a VLAN (e.g. vlan2)<br>• a switchport (e.g. port1.0.4)<br>• a static channel group (e.g. sa2)<br>• a dynamic (LACP) channel group (e.g. po2)<br>• a bridge interface (e.g. br0)<br>• a tunnel interface (e.g. tunnel0)<br>• a 3G cellular interface (e.g. cellular0)<br>• a WWAN interface (e.g wwan0)<br>• the loopback interface (lo)<br>• a continuous range of interfaces, separated by a hyphen (e.g. ppp2-4)<br>• a comma-separated list (e.g. ppp0,ppp2-4). Do not mix interface types in a list.<br>The specified interfaces must exist. |

**Mode** User Exec and Privileged Exec

**Usage notes** Note that the output displayed with this command will show MTU (Maximum Transmission Unit) size for VLAN interfaces, and MRU (Maximum Received Unit) size for switch ports.

**Example** To display configuration and status information for all interfaces, use the command:

```
awplus# show interface
```

Figure 12-1: Example output from the **show interface** command:

```
awplus#show interface
Interface port1.0.1
  Link is UP, administrative state is UP
  Hardware is Ethernet, address is 0000.cd38.026c
  index 5001 metric 1 mru 1500
  current duplex full, current speed 1000, current polarity mdix
  configured duplex auto, configured speed auto, configured polarity auto
  <UP,BROADCAST,RUNNING,MULTICAST>
  SNMP link-status traps: Disabled
    input packets 2927667, bytes 224929311, dropped 0, multicast packets 1242629
    output packets 378084, bytes 54372424, multicast packets 1, broadcast packets 10
    input average rate : 30 seconds 5.19 Kbps, 5 minutes 8.16 Kbps
    output average rate: 30 seconds 6.04 Kbps, 5 minutes 73.89 Kbps
    input peak rate 268.60 Kbps at 2018/04/10 17:46:43
    output peak rate 6.81 Mbps at 2018/04/10 18:15:44
  Time since last state change: 7 days 01:58:10
...
```

To display configuration and status information for the loopback interface lo, use the command:

```
awplus# show interface lo
```

Figure 12-2: Example output from the **show interface lo** command:

```
awplus#show interface lo
Interface lo
  Link is UP, administrative state is UP
  Hardware is Loopback
  index 1 metric 1
  <UP,LOOPBACK,RUNNING>
  VRF Binding: Not bound
  SNMP link-status traps: Disabled
  Router Advertisement is disabled
  Router Advertisement default routes are accepted
  Router Advertisement prefix info is accepted
  Time since last state change: 8 days 19:41:47
```

To display configuration and status information for interface vlan1, use the command:

```
awplus# show interface vlan1
```

Figure 12-3: Example output from the **show interface vlan1** command:

```
awplus#show interface vlan1
Interface vlan1
  Link is UP, administrative state is UP
  Hardware is VLAN, address is 0000.cd38.026c
  IPv4 address 192.168.1.1/24 broadcast 192.168.1.255
  index 301 metric 1 mtu 1500
  arp ageing timeout 300
  <UP,BROADCAST,RUNNING,MULTICAST>
  VRF Binding: Not bound
  SNMP link-status traps: Disabled
  Router Advertisement is disabled
  Router Advertisement default routes are accepted
  Router Advertisement prefix info is accepted
    input packets 0, bytes 0, dropped 0, multicast packets 0
    output packets 9, bytes 612, multicast packets 0, broadcast packets 0
    input average rate : 30 seconds 0 bps, 5 minutes 0 bps
    output average rate: 30 seconds 0 bps, 5 minutes 0 bps
    output peak rate 140 bps at 2018/04/10 16:40:56
  Time since last state change: 8 days 19:09:19
```

To display configuration and status information for br1, use the command:

```
awplus# show interface br1
```

```
awplus#show interface br1
Interface br1
  Link is UP, administrative state is UP
  Hardware is Bridge
  IPv6 address fe80::200:cdff:fe38:f7/64
  index 33555969 metric 1
  MAC ageing time 300
  <UP,BROADCAST,RUNNING,MULTICAST>
  SNMP link-status traps: Disabled
    input packets 1328, bytes 143605, dropped 0, multicast packets 0
    output packets 1847, bytes 218999, multicast packets 1 broadcast packets 3
    input average rate : 30 seconds 3.00 Kbps, 5 minutes 1.02 Kbps
    output average rate: 30 seconds 5.32 Kbps, 5 minutes 2.06 Kbps
    input peak rate 8.19 Kbps at 2017/11/13 05:09:59
    output peak rate 17.05 Kbps at 2017/11/13 05:11:23
  Time since last state change: 0 days 00:00:09
```

To display configuration and status information for eth1, use the command:

```
awplus# show interface eth1
```

Figure 12-4: Example output from the **show interface eth1** command:

```
awplus#show interface eth1
Interface eth1
  Link is DOWN, administrative state is UP
  Hardware is Ethernet, address is 0000.cd38.026a
  index 12 metric 1 mtu 1500
  configured duplex auto, configured speed auto, configured polarity auto
  <UP,BROADCAST,MULTICAST>
  VRF Binding: Not bound
  SNMP link-status traps: Disabled
  Bandwidth 1g
  Router Advertisement is disabled
  Router Advertisement default routes are accepted
  Router Advertisement prefix info is accepted
    input packets 0, bytes 0, dropped 0, multicast packets 0
    output packets 11, bytes 5848
    input average rate : 30 seconds 0 bps, 5 minutes 0 bps
    output average rate: 30 seconds 0 bps, 5 minutes 0 bps
    output peak rate 2.48 Kbps at 2018/04/10 18:22:14
  Time since last state change: 7 days 22:56:59
```

**Related commands**

mru jumbo

mtu

show interface brief

**Command changes**

Version 5.4.7-2.1: average rate and peak rate added to output

# show interface brief

**Overview** Use this command to display brief interface, configuration, and status information, including provisioning information.

For information on filtering and saving command output, see the "Getting Started with AlliedWare Plus" Feature Overview and Configuration Guide.

**Syntax** `show interface brief`

**Mode** User Exec and Privileged Exec

**Output** Figure 12-5: Example output from **show interface brief**

```
awplus#show interface brief
Interface              Status          Protocol
port1.0.1              admin up        down
port1.0.2              admin up        down
port1.0.3              admin up        down
port1.0.4              admin up        down
...
eth1                   admin up        down
lo                     admin up        running
vlan1                  admin up        down
ppp1                   admin up        down
```

Table 12-1: Parameters in the output of **show interface brief**

| Parameter | Description |
|---|---|
| `Interface` | The name or type of interface. |
| `Status` | The administrative state. This can be either **admin up** or **admin down**. |
| `Protocol` | The link state. This can be either **down**, **running**, or **provisioned**. |

**Related commands** show interface

show interface memory

# show interface memory

**Overview** This command displays the shared memory used by either all interfaces, or the specified interface or interfaces. The output is useful for diagnostic purposes by Allied Telesis authorized service personnel.

For information on filtering and saving command output, see the "Getting Started with AlliedWare Plus" Feature Overview and Configuration Guide.

**Syntax**

```
show interface memory
show interface <port-list> memory
```

| Parameter | Description |
|---|---|
| *<port-list>* | Display information about only the specified port or ports. The port list can be:<br>• an Eth port (e.g. eth1)<br>• an 802.1Q Ethernet sub-interface (e.g. eth1.10, where '10' is the VLAN ID specified by the **encapsulation dot1q** command)<br>• a switchport (e.g. port1.0.4)<br>• a static channel group (e.g. sa2)<br>• a dynamic (LACP) channel group (e.g. po2)<br>• a continuous range of ports separated by a hyphen (e.g. port1.0.1-1.0.4)<br>• a comma-separated list (e.g. port1.0.1,port1.0.3-1.0.4). Do not mix port types in the same list. |

**Mode** User Exec and Privileged Exec

**Example** To display the shared memory used by all interfaces, use the command:

```
awplus# show interface memory
```

To display the shared memory used by port1.0.1 and port1.0.3 to port1.0.4, use the command:

```
awplus# show interface port1.0.1,port1.0.3-port1.0.4 memory
```

**Output** Figure 12-6: Example output from the **show interface memory** command

```
awplus#show interface memory
Vlan blocking state shared memory usage
---------------------------------------------
Interface     shmid         Bytes Used      nattch      Status
port1.0.1     294921        512             1
port1.0.2     491535        512             1
port1.0.3     458766        512             1
...
eth1          393228        512             1
lo            360459        512             1
```

Figure 12-7: Example output from **show interface <port-list> memory** for a list of interfaces

```
awplus#show interface port1.0.1,port1.0.3-port1.0.4 memory
Vlan blocking state shared memory usage
---------------------------------------------
Interface    shmid        Bytes Used     nattch     Status
port1.0.1    589842       512            1
port1.0.3    688149       512            1
port1.0.4    327690       512            1
```

**Related commands**

show interface brief

show interface status

show interface switchport

# show interface status

**Overview** Use this command to display the status of the specified interface or interfaces. Note that when no interface or interfaces are specified then the status of all interfaces on the device are shown.

**Syntax** `show interface [<port-list>] status`

| Parameter | Description |
|---|---|
| *<port-list>* | The ports to display information about. The port list can be:<br>• an Eth port (e.g. eth1)<br>• an 802.1Q Ethernet sub-interface (e.g. eth1.10, where '10' is the VLAN ID specified by the **encapsulation dot1q** command)<br>• a switchport (e.g. port1.0.4)<br>• a static channel group (e.g. sa2)<br>• a dynamic (LACP) channel group (e.g. po2)<br>• a continuous range of ports separated by a hyphen (e.g. port1.0.1-1.0.4)<br>• a comma-separated list (e.g. port1.0.1,port1.0.3-1.0.4). Do not mix port types in the same list. |

**Examples** To display the status of port1.0.1 to port1.0.3, use the command:

```
awplus# show interface port1.0.1-port1.0.3 status
```

**Table 13:** Example output from the **show interface <port-list> status** command

```
awplus#show interface port1.0.1-port1.0.3 status
Port       Name                Status            Vlan Duplex   Speed Type
port1.0.1                      notconnect           1 auto      auto 1000BASE-T
port1.0.2                      notconnect           1 auto      auto 1000BASE-T
port1.0.3                      notconnect           1 auto      auto 1000BASE-T
```

To display the status of all ports, use the command:

```
awplus# show interface status
```

**Table 14:** Example output from the **show interface status** command

```
awplus#show interface status
Port       Name                Status            Vlan Duplex   Speed Type
port1.0.1 Trunk_Net            connected        trunk a-full  a-1000 1000BaseTX
port1.0.2 Access_Net1          connected            1 full      1000 1000BaseTX
port1.0.3 Access_Net1          disabled             1 auto      auto 1000BaseTX
...
```

**Table 15:** Parameters in the output from the **show interface status** command

| Parameter | Description |
|---|---|
| `Port` | Name/Type of the interface. |
| `Name` | Description of the interface. |
| `Status` | The administrative and operational status of the interface; one of:<br>• disabled: the interface is administratively down.<br>• connect: the interface is operationally up.<br>• notconnect: the interface is operationally down. |
| `Vlan` | VLAN type or VLAN IDs associated with the port:<br>• When the VLAN mode is trunk, it displays **trunk** (it does not display the VLAN IDs).<br>• When the VLAN mode is access, it displays the VLAN ID.<br>• When the port is an Eth port, it displays **none**: there is no VLAN associated with it. |
| `Duplex` | The actual duplex mode of the interface, preceded by **a-** if it has autonegotiated this duplex mode. If the port is disabled or not connected, it displays the configured duplex setting. |
| `Speed` | The actual link speed of the interface, preceded by **a-** if it has autonegotiated this speed. If the port is disabled or not connected, it displays the configured speed setting. |
| `Type` | The type of interface, e.g. 1000BaseTX. For SFP bays, it displays **Unknown** if it does not recognize the type of SFP installed, or **Not present** if an SFP is not installed or is faulty. |

**Related commands**

show interface

show interface memory

# shutdown

**Overview** This command shuts down the selected interface. This administratively disables the link and takes the link down at the physical (electrical) layer.

Use the **no** variant of this command to disable this function and bring the link back up again.

**Syntax**

```
shutdown
no shutdown
```

**Mode** Interface Configuration

**Usage notes** If you shutdown an aggregator, the device shows the admin status of the aggregator and its component ports as "admin down". While the aggregator is down, the device accepts **shutdown** and **no shutdown** commands on component ports, but these have no effect on port status. Ports will not come up again while the aggregator is down.

**Example** To shut down port1.0.1, use the commands:

```
awplus# configure terminal
awplus(config)# interface port1.0.1
awplus(config-if)# shutdown
```

To bring up port1.0.1, use the commands:

```
awplus# configure terminal
awplus(config)# interface port1.0.1
awplus(config-if)# no shutdown
```

To shut down vlan2, use the commands:

```
awplus# configure terminal
awplus(config)# interface vlan2
awplus(config-if)# shutdown
```

To bring up vlan2, use the commands:

```
awplus# configure terminal
awplus(config)# interface vlan2
awplus(config-if)# no shutdown
```

# 13 USB Cellular Modem Commands

## Introduction

**Overview** This chapter provides an alphabetical reference of commands used to configure USB Cellular Modems.

For more information, see the USB Cellular Modem Feature Overview and Configuration Guide.

**Command List**


- "apn" on page 470
- "chat-script" on page 472
- "cid" on page 473
- "encapsulation ppp" on page 474
- "show cellular" on page 476
- "show system usb" on page 479
- "usb mode-switch" on page 481

# apn

**Overview** Use this command to set the Access Point Name (APN) to use to connect to a 3G serial cellular network.

Use the **no** variant of this command to unset the APN.

**Syntax**

```
apn <access-point-name>
no apn
```

| Parameter | Description |
|---|---|
| *<access-point-name>* | The APN to use to connect to a cellular network (for example, www.example.com). |

**Default** No APN is set

**Mode** Interface Configuration (Cellular)

**Usage notes** The APN has to be set in order to initiate the cellular network connection. Some mobile network operators do not require a specific APN to be specified, in this case any APN can be used.

**Examples** To set the APN to www.example.com for a cellular interface, use the commands:

```
awplus# configure terminal
awplus(config)# int cellular0
awplus(config-if)# apn www.example.com
```

**Output** Figure 13-1: Example output from the **apn** command

```
awplus#configure terminal
awplus(config)#int cellular0
awplus(config-if)#apn www.example.com
```

To unset the APN, use the commands:

```
awplus# configure terminal
awplus(config)# int cellular0
awplus(config-if)# no apn
```

**Output** Figure 13-2: Example output from the **no apn** command

```
awplus#configure terminal
awplus(config)#int cellular0
awplus(config-if)#no apn
```

**Related commands** chat-script

show cellular

show system usb

usb mode-switch

# chat-script

**Overview**

Use this command to set a chat-script, instead of the default chat-script, to connect to a 3G serial cellular network.

Use the **no** variant of this command to set the chat-script back to the default.

**Syntax**

```
chat-script <file-name>
no chat-script
```

| Parameter | Description |
|---|---|
| *<file-name>* | The path to the chat-script file (this file has to have a ".chat" extension). |

**Default**

The default chat-script is a built-in chat-script that in most cases is sufficient for connecting to a cellular network.

**Mode**

Interface Configuration (Cellular)

**Usage notes**

The chat-script file must have the file extension ".chat". The chat-script consists of a sequence of expect-send pairs of strings. The send strings are AT (Hayes) commands. Any occurrence of the string $APN in the chat-script will be substituted with the Access Point Name (APN) configured on a cellular interface.

**Examples**

To use a non-default chat-script, "connect.chat", use the commands:

```
awplus# configure terminal
awplus(config)# interface cellular0
awplus(config-if)# #chat-script connect.chat
```

To use the default chat-script, use the commands:

```
awplus# configure terminal
awplus(config)# interface cellular0
awplus(config-if)# #no chat-script
```

**Related commands**

apn

cid

show cellular

show system usb

usb mode-switch

# cid

**Overview**

Use this command to set the PDP Context-ID (CID). The customer information in the CID is used to connect to a 3G cellular network.

Use the **no** variant of this command to set the CID back to the default value of 1.

**Syntax**

```
cid <context-id>
no cid
```

| Parameter | Description |
|---|---|
| `cid` | Context ID (CID) includes identifying information about the mobile customer.<br>For example, the PDP Contexts include the Context-ID that contains the following information:<br>Type, APN, Address, Header Compression, and Status. |
| *<context-id>* | The Context-ID is a number from the range 1 to 10. |

**Default**

Context-ID is set to1

**Mode**

Interface Configuration (cellular)

**Usage notes**

Some cellular modems may have elements of the CID that are read-only.

Use this command to change the CID instead of using a custom chat-script.

**Examples**

To set the Context ID to 2, use the following commands:

```
awplus# configure terminal
awplus(config)# interface cellular0
awplus(config-if)# cid 2
```

To set the Context ID back to the default value of 1, use the following commands:

```
awplus# configure terminal
awplus(config)# interface cellular0
awplus(config-if)# no cid
```

**Related commands**

apn

chat-script

show cellular

**Command changes**

Version 5.4.9-2.1: command added

# encapsulation ppp

**Overview** Use this command to enable PPP encapsulation and create one or more PPP interfaces over Ethernet, a cellular interface, or an L2TPv2 managed VPN.

Use the **no** variant of this command to disable PPP encapsulation and remove the specified PPP interface.

**Syntax**

```
encapsulation ppp <index>
no encapsulation ppp <index>
```

| Parameter | Description |
|---|---|
| *<index>* | The PPP interface index number in the range from 0 to 255. |

**Default** No PPP encapsulation or interfaces are configured by default.

**Mode** Interface Configuration mode for an Ethernet interface (e.g. **interface eth1**), or an Ethernet sub-interface (e.g. **interface eth1.1**), or a cellular interface (e.g. **interface cellular0**).

L2TP Tunnel Configuration mode for an L2TP tunnel (e.g. **l2tp tunnel tunnel0**).

**Examples** To configure a PPP interface with index 0 for Ethernet interface eth1, use the commands:

```
awplus# configure terminal
awplus(config)# interface eth1
awplus(config-if)# encapsulation ppp 0
```

To shut down the ppp0 interface and remove it from Ethernet interface eth1, use the commands:

```
awplus# configure terminal
awplus(config)# interface ppp0
awplus(config-if)# shutdown
awplus(config-if)# interface eth1
awplus(config-if)# no encapsulation ppp 0
```

To set the L2TP tunnel tunnel1 to encapsulate the PPP interface with index 1, use the commands:

```
awplus# configure terminal
awplus(config)# l2tp tunnel tunnel1
awplus(config-l2tp-tunnel)# encapsulation ppp 1
```

To remove the PPP interface with index 1 from L2TP tunnel tunnel1, use the commands:

```
awplus# configure terminal
awplus(config)# l2tp tunnel tunnel1
awplus(config-l2tp-tunnel)# no encapsulation ppp 1
```

**Related commands**

l2tp tunnel

ppp service-name (PPPoE)

show interface (PPP)

# show cellular

**Overview** Use this command to display status information about 3G serial USB cellular modems currently plugged into your AR-Series Firewall.

**Syntax** `show cellular <cellular-interface-name>`

| Parameter | Description |
|---|---|
| *<cellular-interface-name>* | Specify the name of a cellular interface. This option displays status information for the cellular modem associated with that interface. |

**Default** None

**Mode** Privileged Exec

**Usage notes** If a cellular interface is specified, then the command only shows information for the cellular modem associated with that interface. Different vendors, and models of cellular modems often provide different sets of information:

- Vendor-specific information will not be displayed if the information is unable to be obtained from the cellular modem.
- For information that is common to most cellular modems, "(unknown)" will be displayed if the information was not obtained successfully.

**Examples** To show status information about all cellular modems, use the command:

```
awplus# show cellular
```

**Output** Figure 13-3: Example output from **show cellular**

```
awplus#show cellular
Interface cellular0
  Manufacturer: huawei
  Model ID: E1762
  Revision ID: 11.126.10.00.74
  Serial ID: 351553036840711
  IMSI: 530011104647258
  Signal Quality:
    RSSI: -71 dBm
    Bit Error Rate: (unknown)
  Service Center Address:
    Phone Number: +6421600600
    Number Type: International
  GPRS Mobile Station Class: Class A
  Serial Port Configuration:
    Baud rate: 115200
    Character Format: 8-N-1
    Parity: Space
```

```
  Terminal Equipment Character Set: IRA
  Cable interface DTE-DCE local flow control:
    To DTE: RTS
    To DCE: CTS
  System Time: 1980/01/06,03:37:39
  GPRS Network Registration Status: Registered, home network
  PIN Request Status: READY
  Functionality Level: Full functionality (power-saving disabled)
  Facility Lock Status:
    SIM card lock: Not active
    SIM fixed dialling memory feature: Not active
    Network personalization: Not active
    Network subset personalization: Not active
    Service provider personalization: Not active
    Corporate personalization: Not active
    Lock phone to first SIM card: Not active
  Call Mode: Single mode
  Wireless Data Service: 3GPP systems (GERAN, UTRAN and E-UTRAN)
  GPRS Service Status: Mobile station is attached to a GPRS service
  Dialling Number Type: National
  Bearer Service Type:
    Autobauding: Enabled
    Service: Data circuit asynchronous (UDI or 3.1 kHz modem)
    Connection Element: Non-transparent
  Automatic time and time zone update via NITS: Not enabled
  PPP support between TE and MT: Supported
  Last Error Report: No cause information available
  PLMN selection method: User controlled PLMN selected from Access Technology
PDP Contexts:
  Context ID: 1
    Type: IP
    APN: www.vodafone.net.nz
    Address: 0.0.0.0
    Header Compression: Off
    Status: Not active
  Primary DNS: 0.0.0.0
  Secondary DNS: 0.0.0.0
  Diagnostic mode baud rate: 115200
  TE-DCE baud rate: 115200
  Tolerance to long delays in PDP call setup: Enabled
  Hardware Version: CD25TCPV
  System Info:
    System Service State: Valid service
    System Service Domain: CS and PS service
    Roaming Status: Not roaming
    System Mode: WCDMA mode
    SIM card state: Valid USIM card state
    System Sub-mode: WCDMA mode
  System Config:
    Supported System Mode: Auto-select
    Network Acquisition Order: WCDMA, then GSM
    Service Domain Support: CS and PS
 Card-Lock:
    Lock Status: Unlock code does not need to be provided
    Remaining Unlock Attempts: 10
    PLMN ID of the operator who has locked this device: None
```

```
 Signal Strength:
    RSSI (dBm): -64
    ECIO (dBm): -5
    RSCP (dBm): -69
  ICCID: 984610411061462785F5
  Software Version: E1762 11.126.10.00.74,CD25TCPV,Ver.B
  HSUPA status: Enabled
  HSDPA status: Enabled
  Card Mode: USIM
  Device Mode:
    Mode ID: 20
    Port Modes:
      Port 0: MDM
      Port 1: NDIS
      Port 2: DIAG
      Port 3: PCUI
      Port 4: CDROM
  Data Service Traffic:
    Last Connection Time (s): 5134
    Last Bytes Transmitted: 0
    Last Bytes Received: 168
    Total Connection Time (s): 64354
    Total Bytes Transmitted: 910
    Total Bytes Received: 3168
  PIN Status:
    Status: READY
    Remaining input attempts:
      PUK: 10
      PIN: 3
      PUK2: 10
      PIN2: 3
```

To show status information about the cellular modem associated with interface 'cellular0' only, use the command:

```
awplus# show cellular cellular0
```

**Related commands**

apn

chat-script

show system usb

usb mode-switch

# show system usb

**Overview** Use this command to display technical information about connected USB devices.

**Syntax** `show system usb [detail]`

| Parameter | Description |
|---|---|
| `detail` | This option provides greater detail about the USB device, such as descriptors for the device, configuration and Interface. |

**Default** None

**Mode** Privileged Exec

**Examples** To show information about USB devices connected to your AR-Series Firewall, use the command:

```
awplus# show system usb
```

**Output** Figure 13-4: Example output from **show system usb**

```
awplus#show system usb
Bus 001 Device 003: ID 12d1:140c Huawei Technologies Co., Ltd. E180v modem
```

To show greater detail of information about USB devices connected to your AR-Series Firewall, use the command:

```
awplus# show system usb detail
```

**Output** Figure 13-5: Example output from **show system usb detail**

```
awplus#show system usb detail

Bus 001 Device 002: ID 12d1:1001 Huawei Technologies Co., Ltd. E169/E620/E800 HS
DPA Modem
Device Descriptor:
  bLength                18
  bDescriptorType         1
  bcdUSB               2.00
  bDeviceClass            0 (Defined at Interface level)
  bDeviceSubClass         0
  bDeviceProtocol         0
  bMaxPacketSize0        64
```

```
  idVendor           0x12d1 Huawei Technologies Co., Ltd.
  idProduct          0x1001 E169/E620/E800 HSDPA Modem
  bcdDevice            0.00
  iManufacturer           3 HUAWEI Technology
  iProduct                2 HUAWEI Mobile
  iSerial                 0
  bNumConfigurations      1
  Configuration Descriptor:
    bLength                 9
    bDescriptorType         2
    wTotalLength           85
    bNumInterfaces          3
    bConfigurationValue     1
    iConfiguration          1 Huawei   Configuration
    bmAttributes         0xe0
      Self Powered
      Remote Wakeup
    MaxPower              500mA
    Interface Descriptor:
      bLength                 9
      bDescriptorType         4
      bInterfaceNumber        0
      bAlternateSetting       0
      bNumEndpoints           3
      bInterfaceClass       255 Vendor Specific Class
      bInterfaceSubClass    255 Vendor Specific Subclass
      bInterfaceProtocol    255 Vendor Specific Protocol
      iInterface              0
...
```

**Related commands**

apn

chat-script

show cellular

usb mode-switch

# usb mode-switch

**Overview** Use this command to map a specific USB device to a mode-switch configuration file.

The **no** variant of this command removes the configuration corresponding to a specific ID.

**Syntax**

```
usb mode-switch id <1-16> vendor-id <vendor-id> product-id
<product-id> [manufacturer <manufacturer>|product
<product>|serial <serial>|vendor <vendor>|model
<model>|revision <revision>] file <file-name>
```

```
no usb mode-switch id <1-16>
```

| Parameter | Descriptio<br>n |
|---|---|
| `id` | mode switch configuration ID. |
| *<1-16>* | Configuration ID number (from 1 through 16). |
| `vendor-id` | Specify the USB device's vendor ID. |
| *<vendor-id>* | 4 digit hexadecimal value representing the device's vendor ID. |
| `product-id` | Specify the USB device's product ID. |
| *<product-id>* | 4 digit hexadecimal value representing the device's product ID. |
| `manufacturer` | Specify the USB manufacturer descriptor. |
| *<manufacturer>* | All or part of the USB manufacturer string descriptor (with spaces replaced by underscores). |
| `product` | Specify the USB product descriptor. |
| *<product>* | All or part of the USB product string descriptor (with spaces replaced by underscores). |
| `serial` | Specify the USB serial descriptor. |
| *<serial>* | All or part of the USB serial string descriptor (with spaces replaced by underscores). |
| `vendor` | Specify the SCSI vendor descriptor. |
| *<vendor>* | All or part of the SCSI model descriptor (with spaces replaced by underscores). |
| `model` | Specify the SCSI model descriptor. |
| *<model>* | All or part of the SCSI revision descriptor (with spaces replaced by underscores). |
| `revision` | Specify the SCSI revision descriptor. |
| *<revision>* | All or part of the SCSI revision descriptor (with spaces replaced by underscores). |

| Parameter | Description |
|---|---|
| `file` | Specify the mode switch config file to be used instead of the default when the target device is inserted. |
| `<file>` | Mode switch configuration file URL with extension .conf. |

**Default** Some USB devices will use a default mode switch configuration file if one is not specified.

**Mode** Global Configuration

**Usage notes** Some USB devices must be explicitly told to switch to a compatible mode. The **usb mode-switch** command does this by matching on a target device by its USB vendor and product IDs, and executing a specified configuration file.

Additional parameters can be defined which specify other USB and SCSI descriptors. These are useful if there are multiple devices that have the same product and vendor IDs, but differ in the other parameters. The mode switch configuration files must have the extension ".conf".

**Examples** To add a mode switch configuration for a USB device, use the commands:

```
awplus# configure terminal
awplus(config)# usb mode-switch id 1 vendor-id 12d1 product-id
140c manufacturer HUAWEI file switch.conf
```

To remove a mode switch configuration for a USB device, use the commands:

```
awplus# configure terminal
awplus(config)# no usb mode-switch id 1
```

**Related commands**

apn

chat-script

show cellular

show system usb

usb mode-switch

# 14 Port Mirroring Commands

## Introduction

**Overview** This chapter provides an alphabetical reference of commands used to configure Port Mirroring.

For more information, see the Mirroring Feature Overview and Configuration Guide.

**Command List**


- "mirror interface" on page 484
- "show mirror" on page 486
- "show mirror interface" on page 487

# mirror interface

**Overview** Use this command to define a mirror port and mirrored (monitored) ports and direction of traffic to be mirrored. The port for which you enter interface mode will be the mirror port.

The destination port is removed from all VLANs, and no longer participates in other switching.

Use the **no** variant of this command to disable port mirroring by the destination port on the specified source port.

**Syntax**

```
mirror interface <source-port-list> direction
{both|receive|transmit}
```

```
no mirror interface <source-port-list>
```

| Parameter | Description |
|---|---|
| `<source-port-list>` | The source switch ports to mirror. A port-list can be:<br>• a port (e.g. port1.0.2)<br>• a continuous range of ports separated by a hyphen, e.g. port1.0.1-port1.0.3<br>• a comma-separated list of ports and port ranges, e.g. port1.0.1,port1.0.2-port1.0.4<br>The source port list cannot include dynamic or static channel groups (link aggregators). |
| `direction` | Specifies whether to mirror traffic that the source port receives, transmits, or both. |
| `both` | Mirroring traffic both received and transmitted by the source port. |
| `receive` | Mirroring traffic received by the source port. |
| `transmit` | Mirroring traffic transmitted by the source port. |

**Mode** Interface Configuration

**Usage notes** Use this command to send traffic to another device connected to the mirror port for monitoring.

For more information, see the Mirroring Feature Overview and Configuration Guide.

A mirror port cannot be associated with a VLAN. If a switch port is configured to be a mirror port, it is automatically removed from any VLAN it was associated with.

This command can only be applied to a single mirror (destination) port, not to a range of ports, nor to a static or dynamic channel group. Do not apply multiple interfaces with an interface command before issuing the mirror interface command. One interface may have multiple mirror interfaces.

**Example** To mirror traffic received and transmitted on port1.0.1 to destination port1.0.2, use the commands:

```
awplus# configure terminal
awplus(config)# interface port1.0.2
awplus(config-if)# mirror interface port1.0.1 direction both
```

# show mirror

**Overview** Use this command to display the status of all mirrored ports.

**Syntax** `show mirror`

**Mode** User Exec and Privileged Exec

**Example** To display the status of all mirrored ports, use the following command:

```
awplus# show mirror
```

**Output** Figure 14-1: Example output from the **show mirror** command

```
Mirror Test Port Name: port1.0.1
Mirror option: Enabled
Mirror direction: both
Monitored Port Name: port1.0.2
```

# show mirror interface

**Overview** Use this command to display port mirroring configuration for a mirrored (monitored) switch port.

**Syntax** `show mirror interface <port>`

| Parameter | Description |
|---|---|
| *<port>* | The monitored switch port to display information about. |

**Mode** User Exec, Privileged Exec and Interface Configuration

**Example** To display port mirroring configuration for port1.0.2, use the following commands:

```
awplus# configure terminal
awplus(config)# interface port1.0.2
awplus(config-if)# show mirror interface port1.0.2
```

**Output** Figure 14-2: Example output from the **show mirror interface** command

```
Mirror Test Port Name: port1.0.1
Mirror option: Enabled
Mirror direction: both
Monitored Port Name: port1.0.2
```

# Part 2: Interfaces and Layer 2

# 15 Switching Commands

## Introduction

**Overview**

This chapter provides an alphabetical reference of commands used to configure switching.

For more information, see the Switching Feature Overview and Configuration Guide.

**Command List**


- "backpressure" on page 491
- "clear mac address-table dynamic" on page 493
- "clear mac address-table static" on page 494
- "clear port counter" on page 495
- "cut-through" on page 496
- "debug platform packet" on page 497
- "duplex" on page 499
- "flowcontrol (switch port)" on page 500
- "linkflap action" on page 502
- "mac address-table acquire" on page 503
- "mac address-table ageing-time" on page 504
- "mac address-table static" on page 505
- "platform multicast-ratelimit" on page 506
- "polarity" on page 507
- "show debugging platform packet" on page 508
- "show flowcontrol interface" on page 509
- "show interface err-disabled" on page 510
- "show interface switchport" on page 511

- "show mac address-table" on page 512
- "show platform" on page 514
- "show platform port" on page 516
- "show storm-control" on page 518
- "speed" on page 519
- "storm-control level" on page 521
- "undebug platform packet" on page 522

# backpressure

**Overview** This command provides a method of applying flow control to ports running in half duplex mode. The setting will only apply when the link is in the half-duplex state.

You can disable backpressure on an interface using the **off** parameter or the **no** variant of this command.

**Syntax**

```
backpressure {on|off}
no backpressure
```

| Parameters | Description |
|---|---|
| on | Enables half-duplex flow control. |
| off | Disables half-duplex flow control. |

**Default** Backpressure is turned off by default. You can determine whether an interface has backpressure enabled by viewing the running-config output; **backpressure on** is shown for interfaces if this feature is enabled.

**Mode** Interface Configuration

**Usage notes** The backpressure feature enables half duplex Ethernet ports to control traffic flow during congestion by preventing further packets arriving. Back pressure utilizes a pre-802.3x mechanism in order to apply Ethernet flow control to switch ports that are configured in the half duplex mode.

The flow control applied by the flowcontrol (switch port) command operates only on full-duplex links, whereas back pressure operates only on half-duplex links.

If a port has insufficient capacity to receive further frames, the device will simulate a collision by transmitting a CSMACD jamming signal from this port until the buffer empties. The jamming signal causes the sending device to stop transmitting and wait a random period of time, before retransmitting its data, thus providing time for the buffer to clear. Although this command is only valid for switch ports operating in half-duplex mode the remote device (the one sending the data) can be operating in the full duplex mode.

To see the currently-negotiated duplex mode for ports whose links are up, use the command show interface. To see the configured duplex mode (when different from the default), use the command show running-config.

**Examples** To enable back pressure flow control on interfaces `port1.0.1-port1.0.2` enter the following commands:

```
awplus# configure terminal
awplus(config)# interface port1.0.1-port1.0.2
awplus(config-if)# backpressure on
```

To disable back pressure flow control on interface `port1.0.2` enter the following commands:

```
awplus# configure terminal
awplus(config)# interface port1.0.2
awplus(config-if)# backpressure off
```

**Validation Commands**

show running-config

show interface

**Related commands**

duplex

# clear mac address-table dynamic

**Overview** Use this command to clear the filtering database of all entries learned for a selected MAC address, a switch port interface, or a VLAN interface.

**Syntax**

```
clear mac address-table dynamic
[address <mac-address>|interface <port>|vlan <vid>]
```

| Parameter | Description |
|---|---|
| `address <mac-address>` | Specify a MAC (Media Access Control) address to be cleared from the filtering database, in the format HHHH.HHHH.HHHH. |
| `interface <port>` | Specify a switch port to be cleared from the filtering database. The port can be:<br>• a switchport (e.g. port1.0.4)<br>• a static channel group (e.g. sa2)<br>• a dynamic (LACP) channel group (e.g. po2) |
| `vlan <vid>` | Specify a VID (VLAN ID) in the range 1 to 4094 to be cleared from the filtering database. |

**Mode** Privileged Exec

**Usage notes** Use this command with options to clear the filtering database of all entries learned for a given MAC address, interface or VLAN. Use this command without options to clear any learned entries.

**Examples** This example shows how to clear all dynamically learned filtering database entries.

```
awplus# clear mac address-table dynamic
```

This example shows how to clear all dynamically learned filtering database entries when learned through device operation for the MAC address 0000.5E00.5302.

```
awplus# clear mac address-table dynamic address 0000.5E00.5302
```

**Related commands** clear mac address-table static

show mac address-table

# clear mac address-table static

**Overview** Use this command to clear the filtering database of all statically configured entries for a selected MAC address, interface, or VLAN.

**Syntax**

```
clear mac address-table static [address <mac-address>|interface
<port>|vlan <vid>]
```

| Parameter | Description |
|---|---|
| `address <mac-address>` | Specify a MAC (Media Access Control) address to be cleared from the filtering database, in the format HHHH.HHHH.HHHH. |
| `interface <port>` | Specify the port from which statically configured entries are to be cleared. The port can be<br>• a switchport (e.g. port1.0.4)<br>• a static channel group (e.g. sa2)<br>• a dynamic (LACP) channel group (e.g. po2) |
| `vlan <vid>` | Specify a VID (VLAN ID) in the range 1 to 4094 to be cleared from the filtering database. |

**Mode** Privileged Exec

**Usage notes** Use this command with options to clear the filtering database of all entries made from the CLI for a given MAC address, interface or VLAN. Use this command without options to clear any entries made from the CLI.

Compare this usage with clear mac address-table dynamic command.

**Examples** This example shows how to clear all filtering database entries configured through the CLI.

```
awplus# clear mac address-table static
```

This example shows how to clear all filtering database entries for a specific interface configured through the CLI.

```
awplus# clear mac address-table static interface port1.0.3
```

This example shows how to clear filtering database entries configured through the CLI for the MAC address 0000.5E00.5302.

```
awplus# clear mac address-table static address 0000.5E00.5302
```

**Related commands**

clear mac address-table dynamic

mac address-table static

show mac address-table

# clear port counter

**Overview** Use this command to clear the packet counters of the port.

**Syntax** `clear port counter [<port>]`

| Parameter | Description |
|---|---|
| *<port>* | The port number or range |

**Mode** Privileged Exec

**Example** To clear the packet counter for port1.0.1, use the command:

```
awplus#  clear port counter port1.0.1
```

**Related commands** show platform port

# cut-through

**Overview**

This command changes the switching method setting to the cut-through switching method on the specified port.

Use the no variant of this command to restore the switching method setting to the default store-and-forward switching method on the specified port.

**Syntax**

```
cut-through
no cut-through
```

**Default**

The store-and forward switching method

**Mode**

Interface Configuration for a switch port interface

**Usage**

Use this command to change the switching method setting to cut-through switching on a port.

In store-and-forward switching, the switch stores the entire frame in the buffers and performs error checking before forwarding the frame. In cut-through switching, the switch forwards a frame without waiting to receive the entire frame. Because the switch does not wait for the entire frame to receive, nor perform error checking, cut-through switching is faster than store-and-forward switching.

To make the link operate in the cut-through method, both egress and ingress ports must be set to the cut-through method using the **cut-through** command. In addition, if the ingress port speed is slower than the egress port speed, the link between the two ports operates in the store-and-forward method.

**Examples**

To change the switching method on port1.0.1 to port1.0.8 to cut-through switching, use the following commands:

```
awplus# configure terminal
awplus(config)# interface port1.0.1-port1.0.8
awplus(config-router)# cut-through
```

To change the switching method to store-and-forward switching, use the following commands:

```
awplus# configure terminal
awplus(config)# interface port1.0.1-port1.0.8
awplus(config-router)# no cut-through
```

**Related Command**

show running-config

# debug platform packet

**Overview** This command enables platform to CPU level packet debug functionality on the device.

Use the **no** variant of this command to disable platform to CPU level packet debug. If the result means both send and receive packet debug are disabled, then any active timeout will be canceled.

**Syntax**

```
debug platform packet [recv] [send] [timeout <timeout>] [vlan <vid>|all]
no debug platform packet [recv] [send]
```

| Parameter | Description |
|---|---|
| `recv` | Debug packets received. |
| `send` | Debug packets sent. |
| `timeout <timeout>` | Stop debug after a specified time. Specify the time in seconds. |
| `vlan <vid>` | Specify a VID (VLAN ID) in the range 1 to 4094 to limit debug to that VLAN. |
| `all` | Debug all VLANs (default setting). |

**Default** A 5 minute timeout is configured by default if no other timeout duration is specified.

**Mode** Privileged Exec and Global Configuration

**Usage notes** This command can be used to trace packets sent and received by the CPU. If a timeout is not specified, then a default 5 minute timeout will be applied.

If a timeout of 0 is specified, packet debug will be generated until the **no** variant of this command is used or another timeout value is specified. The timeout value applies to both send and receive debug and is updated whenever the **debug platform packet** command is used.

**Examples** To enable both receive and send packet debug for the default timeout of 5 minutes, enter:

```
awplus# debug platform packet
```

To enable receive packet debug for 10 seconds, enter:

```
awplus# debug platform packet recv timeout 10
```

To enable send packet debug with no timeout, enter:

```
awplus# debug platform packet send timeout 0
```

To enable VLAN packet debug for VLAN 1 with a timeout duration of 3 minutes, enter:

```
awplus# debug platform packet vlan 1 timeout 180
```

To disable receive packet debug, enter:

```
awplus# no debug platform packet recv
```

**Related commands**

show debugging platform packet

undebug platform packet

# duplex

**Overview** This command changes the duplex mode for the specified port.

To see the currently-negotiated duplex mode for ports whose links are up, use the command show interface. To see the configured duplex mode (when different from the default), use the command show running-config.

**Syntax**

```
duplex {auto|full|half}
```

| Parameter | Description |
|---|---|
| `auto` | Auto-negotiate duplex mode. |
| `full` | Operate in full duplex mode only. |
| `half` | Operate in half duplex mode only. |

**Default** By default, ports auto-negotiate duplex mode.

**Mode** Interface Configuration

**Usage notes** Switch ports in a static or dynamic (LACP) channel group must have the same port speed and be in full duplex mode. Once switch ports have been aggregated into a channel group, you can set the duplex mode of all the switch ports in the channel group by applying this command to the channel group.

**Examples** To specify full duplex for port1.0.4, enter the following commands:

```
awplus# configure terminal
awplus(config)# interface port1.0.4
awplus(config-if)# duplex full
```

To specify half duplex for port1.0.4, enter the following commands:

```
awplus# configure terminal
awplus(config)# interface port1.0.4
awplus(config-if)# duplex half
```

To auto-negotiate duplex mode for port1.0.4, enter the following commands:

```
awplus# configure terminal
awplus(config)# interface port1.0.4
awplus(config-if)# duplex auto
```

**Related commands**

polarity

speed

show interface

# flowcontrol (switch port)

**Overview** Use this command to enable flow control, and configure the flow control mode for the switch port.

Use the **no** variant of this command to disable flow control for the specified switch port.

**Syntax**

```
flowcontrol both
flowcontrol {send|receive} {off|on}
no flowcontrol
```

| Parameter | Description |
|---|---|
| `both` | Use this parameter to specify send and receive flow control for the port. |
| `receive` | When the port receives pause frames, it temporarily stops (pauses) sending traffic. |
| `on` | Enable the specified flow control. |
| `off` | Disable the specified flow control. |
| `send` | When the port is congested (receiving too much traffic), it sends pause frames to request the other end to temporarily stop (pause) sending traffic. |

**Default** By default, flow control is disabled.

**Mode** Interface Configuration

**Usage notes** The flow control mechanism specified by 802.3x is only for full duplex links. It operates by sending PAUSE frames to the link partner to temporarily suspend transmission on the link.

Flow control enables connected Ethernet ports to control traffic rates during congestion by allowing congested nodes to pause link operation at the other end. If one port experiences congestion, and cannot receive any more traffic, it notifies the other port to stop sending until the condition clears. When the local device detects congestion at its end, it notifies the remote device by sending a pause frame. On receiving a pause frame, the remote device stops sending data packets, which prevents loss of data packets during the congestion period.

For half-duplex links, an older form of flow control known as backpressure is supported. See the related backpressure command.

For flow control on async serial (console) ports, see the flowcontrol hardware (asyn/console) command.

**Examples**

To enable flow control on port1.0.2, use the commands:

```
awplus# configure terminal
awplus(config)# interface port1.0.2
awplus(config-if)# flowcontrol both
```

To disable flow control on port1.0.2, use the commands:

```
awplus# configure terminal
awplus(config)# interface port1.0.2
awplus(config-if)# no flowcontrol
```

To enable flow control on port1.0.2 (receive only), use the commands:

```
awplus# configure terminal
awplus(config)# interface port1.0.2
awplus(config-if)# flowcontrol receive on
```

To enable flow control on port1.0.2 (send only), use the commands:

```
awplus# configure terminal
awplus(config)# interface port1.0.2
awplus(config-if)# flowcontrol send on
```

To disable flow control on port1.0.2 (receive only), use the commands:

```
awplus# configure terminal
awplus(config)# interface port1.0.2
awplus(config-if)# flowcontrol receive off
```

To disable flow control on port1.0.2 (send only), use the commands:

```
awplus# configure terminal
awplus(config)# interface port1.0.2
awplus(config-if)# flowcontrol send off
```

**Related commands**

backpressure

show running-config

# linkflap action

**Overview** Use this command to detect flapping on all ports. If more than 15 flaps occur in less than 15 seconds the flapping port will shut down.

Use the **no** variant of this command to disable flapping detection at this rate.

**Syntax**

```
linkflap action [shutdown]
no linkflap action
```

| Parameter | Description |
|---|---|
| `linkflap` | Global setting for link flapping. |
| `action` | Specify the action for port. |
| `shutdown` | Shutdown the port. |

**Default** Linkflap action is disabled by default.

**Mode** Global Configuration

**Example** To enable the linkflap action command on the device, use the following commands:

```
awplus# configure terminal
awplus(config)# linkflap action shutdown
```

# mac address-table acquire

**Overview** Use this command to enable MAC address learning on the device.

Use the **no** variant of this command to disable learning.

**Syntax**

```
mac address-table acquire
no mac address-table acquire
```

**Default** Learning is enabled by default for all instances.

**Mode** Global Configuration

**Example**

```
awplus# configure terminal
awplus(config)# mac address-table acquire
```

# mac address-table ageing-time

**Overview** Use this command to specify an ageing-out time for a learned MAC address. The learned MAC address will persist for at least the specified time.

The **no** variant of this command will reset the ageing-out time back to the default of 300 seconds (5 minutes).

**Syntax**

```
mac address-table ageing-time <ageing-timer> none
no mac address-table ageing-time
```

| Parameter | Description |
|---|---|
| *<ageing-timer>* | *<10-1000000>* The number of seconds of persistence. |
| none | Disable learned MAC address timeout. |

**Default** The default ageing time is 300 seconds.

**Mode** Global Configuration

**Examples** The following commands specify various ageing timeouts on the device:

```
awplus# configure terminal
awplus(config)# mac address-table ageing-time 1000
awplus# configure terminal
awplus(config)# mac address-table ageing-time none
awplus# configure terminal
awplus(config)# no mac address-table ageing-time
```

# mac address-table static

**Overview** Use this command to statically configure the MAC address-table to forward or discard frames with a matching destination MAC address.

**Syntax**

```
mac address-table static <mac-addr> {forward|discard} interface
<port> [vlan <vid>]
```

```
no mac address-table static <mac-addr> {forward|discard}
interface <port> [vlan <vid>]
```

| Parameter | Description |
|---|---|
| `<mac-addr>` | The destination MAC address in HHHH.HHHH.HHHH format. |
| `interface <port>` | Specify a switch port to be cleared from the filtering database. The port can be:<br>• a switchport (e.g. port1.0.4)<br>• a static channel group (e.g. sa2)<br>• a dynamic (LACP) channel group (e.g. po2) |
| `vlan <vid>` | The ID of a VLAN to apply the command to, in the range 1 to 4094. If you do not specify a VLAN, the command applies to VLAN1. |

**Mode** Global Configuration

**Usage notes** The **mac address-table static** command is only applicable to Layer 2 switched traffic within a single VLAN. Do not apply the **mac address-table static** command to Layer 3 switched traffic passing from one VLAN to another VLAN. Frames will not be discarded across VLANs because packets are routed across VLANs. This command only works on Layer 2 traffic.

**Example**

```
awplus# configure terminal
```

```
awplus(config)# mac address-table static 2222.2222.2222 forward
interface port1.0.4 vlan 3
```

**Related commands**

clear mac address-table static

show mac address-table

# platform multicast-ratelimit

**Overview**

Use this command to set the maximum number of multicast packets to be forwarded to the CPU (in packets per second). Setting the value to zero disables rate limiting.

This command should be used with care. Increasing or removing the limit could make the device less responsive under heavy multicast load.

Use the **no** variant of this command to return the limit to its default.

**Syntax**

```
platform multicast-ratelimit <0-1000>
no platform multicast-ratelimit
```

**Default**

10 packets per second (pps)

**Mode**

Global Configuration

**Usage notes**

If you find that the CPU load on your device from multicast traffic is higher than desired, reducing this rate may reduce the CPU load.

If you need the device to process a large amount of multicast traffic, increasing this rate may improve performance.

**Example**

To set the rate to 30pps, use the commands:

```
awplus# configure terminal
awplus(config)# platform multicast-ratelimit 30
```

**Command changes**

Version 5.4.8-1.1: default changed to 100pps on SBx908 GEN2, SBx8100, and x930 Series switches.

# polarity

**Overview** This command sets the MDI/MDIX polarity on a copper-based switch port.

**Syntax**

```
polarity {auto|mdi|mdix}
```

| Parameter | Description |
|---|---|
| `mdi` | Sets the polarity to MDI (medium dependent interface). |
| `mdix` | Sets the polarity to MDI-X (medium dependent interface crossover). |
| `auto` | The switch port sets the polarity automatically. This is the default option. |

**Default** By default, switch ports set the polarity automatically (**auto**).

**Mode** Interface Configuration

**Usage notes** We recommend the default **auto** setting for MDI/MDIX polarity. Polarity applies to copper 10BASE-T, 100BASE-T, and 1000BASE-T switch ports; it does not apply to fiber ports. See the "MDI/MDIX Connection Modes" section in the Switching Feature Overview and Configuration Guide for more information.

**Example** To set the polarity for port1.0.4 to fixed MDI mode, use the following commands:

```
awplus# configure terminal
awplus(config)# interface port1.0.4
awplus(config-if)# polarity mdi
```

# show debugging platform packet

**Overview** This command shows platform to CPU level packet debugging information.

**Syntax**

```
show debugging platform packet
```

**Mode** User Exec and Privileged Exec

**Example** To display the platform packet debugging information, use the command:

```
awplus# show debugging platform packet
```

**Related commands**

debug platform packet

undebug platform packet

# show flowcontrol interface

**Overview** Use this command to display flow control information.

**Syntax** `show flowcontrol interface <port>`

| Parameter | Description |
|---|---|
| *<port>* | Specifies the name of the port to be displayed. |

**Mode** User Exec and Privileged Exec

**Example** To display the flow control for port1.0.3, use the command:

```
awplus# show flowcontrol interface port1.0.3
```

**Output** Figure 15-1: Example output from the **show flowcontrol interface** command for a specific interface

```
Port     Send  FlowControl    Receive  FlowControl  RxPause TxPause
          admin    oper        admin    oper
-----     ------- --------    ------- --------     ------- -------
port1.0.3 on       on           on       on            0       0
```

# show interface err-disabled

**Overview** Use this command to show the ports which have been dynamically shut down by protocols running on the device and the protocols responsible for the shutdown.

**Syntax**

```
show interface [<interface-range> err-disabled]
```

| Parameter | Description |
|---|---|
| `<interface-range>` | Interface range |
| `err-disabled` | Brief summary of interfaces shut down by protocols |

**Mode** User Exec and Privileged Exec

**Example** To show which protocols have shut down ports, use the commands:

```
awplus# show interface err-disabled
```

# show interface switchport

**Overview** Use this command to show VLAN information about each switch port.

**Syntax**

```
show interface switchport
```

**Mode** User Exec and Privileged Exec

**Example** To display VLAN information about each switch port, enter the command:

```
awplus# show interface switchport
```

**Output** Figure 15-2: Example output from the **show interface switchport** command

```
 Interface name         : port1.0.1
 Switchport mode        : access
 Ingress filter         : enable
 Acceptable frame types : all
 Default Vlan           : 1
 Configured Vlans       : 2
 Dynamic Vlans          :

 Interface name         : port1.0.2
 Switchport mode        : trunk
 Ingress filter         : enable
 Acceptable frame types : all
 Default Vlan           : 1
 Configured Vlans       : 1 4 5 6 7 8
 Dynamic Vlans          :
...
```

**Related commands** show interface memory

# show mac address-table

**Overview** Use this command to display the MAC address-table for all configured VLANs.

**Syntax** `show mac address-table`

**Mode** User Exec and Privileged Exec

**Usage notes** The **show mac address-table** command is only applicable to view a MAC address-table for Layer 2 switched traffic within VLANs.

**Example** To display the MAC address-table, use the following command:

```
awplus# show mac address-table
```

**Output** See the following sample output captured when there was no traffic being switched:

```
awplus#show mac address-table

VLAN port         mac               type
1    unknown      0000.cd28.0752    forward   static
ARP  -            0000.cd00.0000    forward   static
```

See the sample output captured when packets were switched and MAC addresses were learned:

```
awplus#show mac address-table

VLAN port         mac               type
1    unknown      0000.cd28.0752    forward   static
1    port1.0.2    0030.846e.9bf4    forward   dynamic
1    port1.0.3    0030.846e.bac7    forward   dynamic
ARP  -            0000.cd00.0000    forward   static
```

Note the new MAC addresses learned for port1.0.2 and port1.0.3 added as dynamic entries.

Note the first column of the output below shows VLAN IDs if multiple VLANs are configured:

```
awplus#show mac address-table

VLAN port         mac               type
1    unknown      0000.cd28.0752    forward   static
1    port1.0.2    0030.846e.bac7    forward   dynamic
2    unknown      0000.cd28.0752    forward   static
2    port1.0.3    0030.846e.9bf4    forward   dynamic
ARP  -            0000.cd00.0000    forward   static
```

Also note if manually configured static MAC addresses exist, this is shown to the right of the type column:

```
awplus(config)#mac address-table static 0000.1111.2222 for int
port1.0.3 vlan 1
awplus(config)#end
awplus#
awplus#show mac address-table

VLAN port         mac              type
1    unknown      0000.cd28.0752   forward   static
1    port1.0.2    0030.846e.bac7   forward   dynamic
1    port1.0.3    0000.1111.2222   forward   static
...
```

**Related commands**

clear mac address-table dynamic

clear mac address-table static

mac address-table static

# show platform

**Overview** This command displays the settings configured by using the **platform** commands.

**Syntax**

```
show platform
```

**Mode** Privileged Exec

**Usage notes** This command displays the settings in the running config. For changes in some of these settings to take effect, the device must be rebooted with the new settings in the startup config.

**Example** To check the settings configured with **platform** commands on the device, use the following command:

```
awplus# show platform
```

**Output** Figure 15-3: Example output from the **show platform** command:

```
awplus#show platform
MAC vlan hashing algorithm    unknown
```

**Table 1:** Parameters in the output of the **show platform** command. Note that the parameters displayed depend on your device, and that not all displayed parameters can be modified on all devices.

| Parameter | Description |
|---|---|
| Routing Ratio | Whether all memory is allocated to IPv4 address table entries only, or whether it is allocated evenly to both IPv4 and IPv6 addresses (set with the **platform routingratio** command). |
| Route Weighting | The split between multicast and unicast route entries (set with the **platform routingratio** command). |
| MAC vlan hashing algorithm | The MAC VLAN hash-key-generating algorithm (set with the **platform mac-vlan-hashing-algorithm** command). The default algorithm is crc32l. The algorithm may need to be changed in rare circumstances in which hash collisions occur. |
| L3 hashing algorithm | The L3 VLAN hash-key-generating algorithm (set with the **platform l3-vlan-hashing-algorithm** command). The default algorithm is crc32l. The algorithm may need to be changed in rare circumstances in which hash collisions occur. |
| Load Balancing | Which packet fields are used in the channel load balancing algorithm (set with the **platform load-balancing** command). |
| Control-plane-prioritization | Maximum traffic rate on the CPU port (set with the **platform control-plane-prioritization rate** command). |

**Table 1:** Parameters in the output of the **show platform** command. Note that the parameters displayed depend on your device, and that not all displayed parameters can be modified on all devices. (cont.)

| Parameter | Description |
|---|---|
| Fdb-chain-length | The length of the FDB hash chain (set with the **platform fdb-chain-length** command). FDB entries are hashed and indexed using a hash. In rare circumstances it may be useful to reduce the chain length. |
| L2MC overlapped group check | Whether Layer 2 multicast entries are checked before deletion (set with the **platform l2mc-overlap** command). |
| silicon-profile | The silicon profile setting (set with the **platform silicon-profile** command) for the switch hardware; one of:<br>• profile 1<br>• profile 2<br>• profile 3<br>• None (default) |
| fdb-l3-hosts mode | Whether Host Mode is turned on or not. Host Mode increases the number of host entries and is available for systems containing SBx81CFC960 controller cards and SBx81XLEM line cards. See **platform silicon-profile** and **platform fdb-l3-hosts** for details. |
| Jumboframe support | Whether the jumbo frames setting is enabled or disabled (set with the **platform jumboframe** command). |
| Traffic Manager | A test setting that is disabled by default. |
| stop-unreg-mc-flooding | Whether the stop-unreg-mc-flooding feature is on or off (set with the **platform stop-unreg-mc-flooding** command). This feature prevents flooding of unregistered multicast packets in the occasional situations in which IGMP snooping does not prevent it. |
| Port Mode | Whether each port on the AT-StackQS is configured as one 40Gbps port or four 10Gbps ports, if they are operating as network ports (set with the **platform portmode interface** command). |
| Vlan-stacking TPID | The value of the TPID set in the Ethernet type field when a frame has a double VLAN tag (set with the **platform vlan-stacking-tpid** command). |
| PBR enabled | Whether policy-based routing is globally enabled or not (set with the **platform pbr-enable** command). |
| Hardware Filter Size | Whether hardware ACLs can filter on IPv6 addresses (ipv4-full-ipv6) or not (ipv4-limited-ipv6). This is set with the **platform hwfilter-size** command. |
| Vlan Ingress Filter Hard Drop | The Bridge Vlan Ingress Filtering drops traffic if the VID assigned to the packet does not match with the port's VLAN membership.<br>There are two ways the traffic is dropped by the Ingress Filtering mechanism:<br>• HARD DROP - Traffic is dropped by the Bridge Engine and not forwarded or trapped.<br>• SOFT DROP - Traffic may be mirrored or trapped by the Bridge Engine. |

# show platform port

**Overview** This command displays the various port registers or platform counters for specified switchports.

**Syntax** `show platform port [<port-list>] [counters]`

| Parameter | Description |
|---|---|
| `<port-list>` | The ports to display information about. A port-list can be:<br>• a switchport (e.g. port1.0.4)<br>• a continuous range of ports separated by a hyphen (e.g. port1.0.1-1.0.4)<br>• a comma-separated list (e.g. port1.0.1,port1.0.3-1.0.4). |
| `counters` | Show the platform counters. |

**Mode** Privileged Exec

**Examples** To display port registers for port1.0.1 to port1.0.4, use the command:

```
awplus# show platform port port1.0.1-port1.0.4
```

To display platform counters for port1.0.1 to port1.0.4, use the command:

```
awplus# show platform port port1.0.1-port1.0.4 counters
```

**Output** Figure 15-4: Example output from the **show platform port** command

```
awplus#show platform port port1.0.1
Phy register value for port1.0.1 (ifindex: 5001)

00:1140  01:7949  02:0362  03:5e14  04:01e1  05:0000  06:0064  07:2001
08:0000  09:0600  0a:0000  0b:0000  0c:0000  0d:4007  0e:0000  0f:3000
10:0020  11:0000  12:0000  13:0000  14:0000  15:0000  16:0000  17:0000
18:7277  19:1000  1a:0000  1b:ffff  1c:6cc7  1d:0000  1e:0000  1f:0000
sfp phy
00:1140  01:7949  02:0362  03:5e14  04:01e1  05:0000  06:0064  07:2001
08:0000  09:0600  0a:0000  0b:0000  0c:0000  0d:4007  0e:0000  0f:3000
10:0020  11:0000  12:0000  13:0000  14:0000  15:0000  16:0000  17:0000
18:7277  19:1000  1a:0000  1b:ffff  1c:6cc7  1d:0000  1e:0000  1f:0000


Port configuration for lport 0x08000000:
Phy Driver: 54680 Gigabit PHY Driver
  enabled:                1
  loopback:               0
  link:                   0
  speed:                  0  max speed:               1000
  duplex:                 0
  linkscan:               1
  autonegotiate:          1
  master:                 2
  tx pause:               0  rx pause:                   0
  untagged vlan:          1
  vlan filter:            1
  stp state:              1
  learn:                  5
  discard:                0
  jam:                    0
  max frame size:      1518
  MC Disable SA:         no
  MC Disable TTL:        no
  MC egress untag:        0
  MC egress vid:          0
  MC TTL threshold:       0
```

# show storm-control

**Overview** Use this command to display storm-control information for all interfaces or a particular interface.

**Syntax**

```
show storm-control [<port>]
```

| Parameter | Description |
|---|---|
| *<port>* | The port to display information about. The port may be:<br>• a switchport (e.g. port1.0.4)<br>• a static channel group (e.g. sa2)<br>• a dynamic (LACP) channel group (e.g. po2) |

**Mode** User Exec and Privileged Exec

**Example** To display storm-control information for port1.0.2, use the following command:

```
awplus# show storm-control port1.0.2
```

**Output** Figure 15-5: Example output from the **show storm-control** command for port1.0.2

```
Port        BcastLevel  McastLevel  DlfLevel
port1.0.2       40. 0%     100. 0%   100. 0%
```

**Related commands** storm-control level

# speed

**Overview** This command changes the speed of the specified port. You can optionally specify the speed or speeds that get autonegotiated, so autonegotiation is only attempted at the specified speeds.

To see the currently-negotiated speed for ports whose links are up, use the show interface command. To see the configured speed (when different from the default), use the show running-config command.

**Syntax**

```
speed {10|100|1000}
speed auto [10] [100] [1000]
```

The following table shows the speed options for each type of port.

| Port type | Speed Options (units are Mbps) |
|---|---|
| RJ-45 copper ports | `auto` (default)<br>`10`<br>`100`<br>`1000` |

**Mode** Interface Configuration

**Default** By default, ports autonegotiate speed.

**Usage notes** We recommend having autonegotiation enabled for link speeds of 1000 Mbps and above. For example, to apply a fixed speed of 1000 Mbps use the command **speed auto 1000**.

If multiple speeds are specified after the auto option to autonegotiate speeds, then the device only attempts autonegotiation at those specified speeds.

Switch ports in a static or dynamic (LACP) channel group must have the same port speed and be in full duplex mode. Once switch ports have been aggregated into a channel group, you can set the speed of all the switch ports in the channel group by applying this command to the channel group.

**Examples** To set the speed of a tri-speed port to 100 Mbps, enter the following commands:

```
awplus# configure terminal
awplus(config)# interface port1.0.2
awplus(config-if)# speed 100
```

To return the port to auto-negotiating its speed, enter the following commands:

```
awplus# configure terminal
awplus(config)# interface port1.0.2
awplus(config-if)# speed auto
```

To set the port to auto-negotiate its speed at 100 Mbps and 1000 Mbps, enter the following commands:

```
awplus# configure terminal
awplus(config)# interface port1.0.2
awplus(config-if)# speed auto 100 1000
```

To set the port to auto-negotiate its speed at 1000 Mbps only, which will fix this port speed to 1000 Mbps, enter the following commands:

```
awplus# configure terminal
awplus(config)# interface port1.0.2
awplus(config-if)# speed auto 1000
```

**Related commands**

duplex

polarity

show interface

speed (asyn)

# storm-control level

**Overview**

Use this command to specify the speed limiting level for broadcast, multicast, or dlf (destination lookup failure) traffic for the port. Storm-control limits the selected traffic type to the specified percentage of the maximum port speed.

Use the **no** variant of this command to disable storm-control for broadcast, multicast or dlf traffic.

**Syntax**

```
storm-control {broadcast|multicast|dlf} level <level>
no storm-control {broadcast|multicast|dlf} level
```

| Parameter | Description |
|---|---|
| `<level>` | `<0-100>` Specifies the percentage of the maximum port speed allowed for broadcast, multicast or destination lookup failure traffic. |
| `broadcast` | Applies the storm-control to broadcast frames. |
| `multicast` | Applies the storm-control to multicast frames. |
| `dlf` | Applies the storm-control to destination lookup failure traffic. |

**Default**

Disabled

**Mode**

Interface Configuration

**Usage notes**

Flooding techniques are used to block the forwarding of unnecessary flooded traffic. A packet storm occurs when a large number of broadcast packets are received on a port. Forwarding these packets can cause the network to slow down or time out.

More than one limit type can be set at a time. For example, you can configure both broadcast and multicast levels on the same port, at the same time.

**Example**

To limit broadcast traffic on port1.0.2 to 30% of the maximum port speed, use the following commands:

```
awplus# configure terminal
awplus(config)# interface port1.0.2
awplus(config-if)# storm-control broadcast level 30
```

**Related commands**

show storm-control

**Command changes**

Version 5.4.9-1.3: Multiple limit types available on x530 series

Version 5.5.0-2.1: Multiple limit types available on x220 and GS980M series

# undebug platform packet

**Overview** This command applies the functionality of the no debug platform packet command.

# 16 Bridging Commands

## Introduction

**Overview** This chapter provides an alphabetical reference of commands used to configure bridging. For more information, see the Bridging Feature Overview and Configuration Guide.

**Command List**


- "ageing-time" on page 525
- "bridge" on page 526
- "bridge-group" on page 527
- "clear mac-filter counter" on page 529
- "default-action" on page 530
- "default-protocol-action" on page 532
- "l3-filtering enable" on page 533
- "mac-filter-group egress" on page 534
- "mac-filter" on page 535
- "mac-filter-group" on page 536
- "mac-learning" on page 537
- "protocol ethii (macfilter)" on page 538
- "protocol novell (macfilter)" on page 540
- "protocol sap (macfilter)" on page 542
- "protocol snap (macfilter)" on page 544
- "rule (macfilter)" on page 546
- "rule ip (macfilter)" on page 548
- "rule ipv6 (macfilter)" on page 550
- "show bridge" on page 552

- "show bridge macaddr" on page 554
- "show mac-filter" on page 555

# ageing-time

**Overview** This command specifies the time period that a learned MAC address will remain defined within the bridge's MAC address table.

Use the **no** variant of this command to set the ageing out time back to the default.

**Syntax**

```
ageing-time <10-1000000>
no ageing-time
```

| Parameter | Description |
|---|---|
| *<10-1000000>* | The number of seconds that the MAC addresses will remain in the table. |

**Default** 300 seconds (5 minutes)

**Mode** Interface Configuration

**Examples** To change the ageing time on br2 to 60 seconds (1 minute), use the following commands:

```
awplus#configure terminal
awplus(config)#interface br2
awplus(config-if)#ageing-time 60
```

To reset the ageing time back to its default, use the following commands:

```
awplus#configure terminal
awplus(config-if)#no ageing-time
```

To reset the ageing time back to its default, you can also use the following commands:

```
awplus#configure terminal
awplus(config-if)#ageing-time 300
```

**Output** None

**Related commands**

bridge

bridge-group

show bridge

show bridge macaddr

# bridge

**Overview** Use this command to create a software bridge.

Use the **no** variant of this command to remove the specified bridge.

**Syntax**

```
bridge <bridge-id>
no bridge <bridge-id>
```

| Parameter | Description |
|---|---|
| *<bridge-id>* | The bridge ID (from 1 to 255). This is made up of the bridge priority and the bridge's MAC address. |

**Default** No configured bridges

**Mode** Global Configuration

**Usage notes** The bridge interface name will be prefixed with 'br' followed by the bridge ID.

*If interfaces exist on a bridge, then the bridge cannot be removed. For example if interface eth1 exists on bridge 2, then the **no bridge 2** command will give you the following message:*

```
% failed to remove interface br2, there are still configured
sub-interfaces.
```

**Example** To create a bridge with the ID of 2, use the following commands:

```
awplus#configure terminal
awplus(config)#bridge 2
```

To remove the bridge with the ID of 2, use the following commands:

```
awplus#configure terminal
awplus(config)##no bridge 2
```

**Related commands**

ageing-time

bridge-group

show bridge

show bridge macaddr

# bridge-group

**Overview** Use this command to add an interface to a bridge. Interfaces that have been added to a bridge will lose their L3 properties.

Use the **no** variant of this command to remove an interface from a bridge.

**Syntax**

```
bridge-group <0-255> [port-protected]
no bridge-group
```

| Parameter | Description |
|---|---|
| *<0-255>* | The ID of the bridge that you are adding the interface to. Interface ID 0 is a VLAN-aware bridge.<br>For more information about the VLAN-aware bridge, see the Bridging Feature Overview and Configuration Guide. |
| port-protected | Interfaces added to a bridge can be added in "protected" mode. Interfaces in this mode that are part of the same bridge-group will be unable to bridge to each other, but communication with unprotected interfaces will be unimpeded. Omitting this option from the command will add the interface in unprotected mode. |

**Default** An interface is not part of any bridge by default

**Mode** Interface Configuration

**Usage notes** Interfaces can only be part of one bridge, so when removing the bridge no parameters are required.

Interfaces that have been added to a bridge will lose their Layer 3 properties. The bridge will act as the Layer 3 interface. The bridge will provide Layer 2 connectivity between interfaces that are a part of the same bridge-group.

You can attached interfaces such as Ethernet, VLAN, VTI (Tunnel) to your bridge.

**Examples** To add eth1 to bridge 2 in unprotected mode, use the following commands:

```
awplus# configure terminal
awplus(config)# interface eth1
awplus(config-if)# bridge-group 2
```

To add eth1 to bridge 2 in protected mode, use the following commands:

```
awplus# configure terminal
awplus(config)# interface eth1
awplus(config-if)# bridge-group 2 port-protected
```

To remove eth1 from bridge 2, use the following commands:

```
awplus# configure terminal
awplus(config)# interface eth1
awplus(config-if)# no bridge-group
```

**Related commands**

ageing-time

bridge

show bridge

show bridge macaddr

# clear mac-filter counter

**Overview** This command clears all the mac-filter counters on a bridge interface.

**Syntax**

```
clear mac-filter counter
clear mac-filter counter ingress
clear mac-filter counter egress
clear mac-filter counter {ingress|egress} <interface-name>
```

| Parameter | Description |
|---|---|
| `ingress` | Clear only the ingress counters |
| `egress` | Clear only the egress counters |
| `<interface-name>` | Clear counters on the specified interface |

**Default** None

**Mode** Privileged Exec

**Examples** To clear all ingress counters on eth1, use the following command:

```
awplus#clear mac-filter counter ingress eth1
```

To clear all ingress counters, use the following command:

```
awplus#clear mac-filter counter ingress
```

To clear all mac-filter counters, use the following command:

```
awplus#clear mac-filter counter
```

**Related commands**

mac-filter

mac-filter-group

show mac-filter

rule (macfilter)

**Command changes** Version 5.4.8-0.2: command updated

# default-action

**Overview** Use this command to set the default action for packets not hitting a particular mac-filter.

Use the **no** variant of this command to remove the configured default action. See the third example below for more information.

**Syntax**

```
default-action [permit|deny|none]
no default-action
```

| Parameter | Description |
|---|---|
| permit | Accept the traffic which didn't match any rule in the mac-filter. This means the traffic will not pass through any other mac-filters. |
| deny | Drop the traffic which didn't hit any rule in the mac-filter. |
| none | Allow the traffic (which didn't hit any rule in the mac-filter) to traverse the next mac-filter, if any are configured. |

**Default** Deny.

**Mode** MAC Filter Configuration

**Example1** To set the default action to **none** for the mac-filter named: filter1, use the following commands:

```
awplus# configure terminal
awplus(config)# mac-filter filter1
awplus(config-macfilter)# default-action none
```

This means that if this filter is set on ingress traffic for eth1 and that traffic doesn't hit any rules in the filter, then the traffic will progress to any other filters present. For example, there could be a filter on bridge1 that eth1 is a part of. If bridge1 also has mac filters, then those filters have a chance to examine that traffic ingressing eth1.

**Example 2** To set the default action to **permit** for the mac-filter named: filter1, use the following commands:

```
awplus# configure terminal
awplus(config)# mac-filter filter1
awplus(config-macfilter)# default-action permit
```

This means that if this filter is set on ingress traffic for eth1 and that traffic doesn't hit any rules in the filter, then the traffic will not progress to any other filters present, and will not undergo any more filtering.

**Example 3** To set the default action to **deny** for the mac-filter named: filter1, use the following commands:

```
awplus# configure terminal
awplus(config)# mac-filter filter1
awplus(config-macfilter)# default-action deny
```

This means that if this filter is set on ingress traffic for eth1 and that traffic doesn't hit any rules in the filter, then the traffic will be dropped. This is the same as setting the command **no default-action**.

**Related commands** mac-filter

**Command changes** Version 5.4.7-2.1: command added

# default-protocol-action

**Overview**

Use this command to set the default behavior (permit or deny) when a packet does not match any configured protocol filter. Permit means to continue to the rules (if rules exist). If there are no rules or no rules match, then continue to the default action.

Use the **no** variant of this command to revert to the default filtering action of 'permit'.

**Syntax**

```
default-protocol-action {permit|deny}
no default-protocol-action
```

| Parameter | Description |
|---|---|
| permit | Allow the packet |
| deny | Drop the packet |

**Default**

Permit.

**Mode**

MAC Filter Configuration

**Example**

To designate ATL-router1 to deny all packets that do not match the configured protocol filters, use the following commands:

```
awplus# configure terminal
awplus(config)# mac-filter ATL-router1
awplus(config-macfilter)# default-protocol-action deny
```

**Related commands**

protocol ethii (macfilter)

protocol novell (macfilter)

protocol sap (macfilter)

protocol snap (macfilter)

**Command changes**

Version 5.4.8-0.2: command added

# l3-filtering enable

**Overview**

Use this command to enable traffic control for bridged traffic on a bridge interface.

Use the **no** variant of this command to disable traffic control for bridged traffic on a bridge interface.

**Syntax**

```
l3-filtering enable
no l3-filtering enable
```

**Default**

Traffic control is disabled by default for bridged traffic.

**Mode**

Interface mode for a bridge interface

**Usage notes**

We do not recommend shaping bridged traffic on firewalls that are running Unified Threat Management (UTM) features, because both Traffic Control and UTM require significant CPU resources.

**Example**

To enable traffic control for bridged traffic on br1, use the commands:

```
awplus# configure terminal
awplus(config)# interface br1
awplus(config-if)# l3-filtering enable
```

**Related commands**

traffic-control

**Command changes**

Version 5.4.7-0.1: command added. Previously, traffic control was enabled by default on all bridge interfaces.

# mac-filter-group egress

**Overview**

Use this command to apply an egress MAC-filter to a bridge interface, bridge port, or potential bridge port.

Use the **no** variant of this command to remove an egress MAC-filter on a specific bridge interface or bridge port.

**Syntax**

```
mac-filter-group egress <mac-filter-name>
no mac-filter-group egress
```

| Parameter | Description |
|---|---|
| *<mac-filter-name>* | The name of the MAC-filter that is applied to the bridge interface or bridge port on egress. |

**Default**

No mac-filter.

**Mode**

Interface Configuration

**Example**

To configure MAC-filter 'filter1' to operate on traffic egressing tunnel2, use the following commands:

```
awplus# configure terminal
awplus(config)# int tunnel2
awplus(config-if)# mac-filter-group egress filter1
```

To remove that same filter, use the following commands:

```
awplus# configure terminal
awplus(config)# int tunnel2
awplus(config-if)# no mac-filter-group egress
```

**Related commands**

mac-filter

show mac-filter

clear mac-filter counter

**Command changes**

Version 5.4.8-0.2 command updated.

# mac-filter

**Overview** This command creates a Layer 2 MAC filter that can be applied on a bridge.

Use the **no** variant of this command to remove the MAC filter.

**Syntax**

```
mac-filter [<mac-filter-name>]
no mac-filter [<mac-filter-name>]
```

| Parameter | Description |
|---|---|
| *<mac-filter-name>* | The name of the mac-filter (maximum of 16 characters). |

**Default** None

**Mode** Interface Configuration

**Usage notes** You can only create one MAC filter at one time.

**Examples** To create a mac-filter with the name of ATL-router1,use the following commands:

```
awplus#configure terminal
awplus(config)#mac-filter ATL-router1
```

To delete a mac-filter, use the following commands:

```
awplus#configure terminal
awplus(config)#no mac-filter ATL-router1
```

**Output** None

**Related commands**

clear mac-filter counter

mac-filter-group

show mac-filter

# mac-filter-group

**Overview** This command applies a Layer two MAC filter on a bridge.

Use the **no** variant of this command to remove the mac-filter on a bridge.

**Syntax**

```
mac-filter-group [<mac-filter-name>]
no mac-filter-group
```

| Parameter | Description |
|---|---|
| *<mac-filter-name>* | The name of the mac-filter (maximum 16 characters). |

**Default** None

**Mode** Interface Configuration

**Usage notes** You can only apply one MAC filter at one time.

**Examples** To apply a mac-filter with the name of ATL-router1 on bridge interface br1,use the following commands:

```
awplus#configure terminal
awplus(config)#interface br1
awplus(config-if)#mac-filter-group ATL-router1
```

To remove the mac-filter on a bridge, use the following commands:

```
awplus#configure terminal
awplus(config)#interface br1
awplus(config-if)#no mac-filter-group
```

**Output** Figure 16-1: Example output from the **mac-filter-group** command displaying information about all bridges:

```
mac-filter "ATL-router1" will be applied to the bridge interface
br1
```

**Related commands**

clear mac-filter counter

mac-filter

show mac-filter

# mac-learning

**Overview** Use this command to enable FDB MAC address learning on a bridge interface. In some circumstances, FDB MAC address learning on a software-based router bridge is not useful, and it is better to flood the traffic within interfaces associated with the bridge instance, to ensure the traffic reaches its destination.

Use the **no** variant of this command to disable or enable FDB MAC address learning on a bridge.

**Syntax**

```
mac-learning
no mac-learning
```

**Default** Learning is enabled by default.

**Mode** Interface mode for a bridge interface

**Example** To turn off learning on bridge 2, use the following commands:

```
awplus# configure terminal
awplus(config)# interface br2
awplus(config-if)# no mac-learning
```

To turn learning on bridge 2 back on, use the following commands:

```
awplus# configure terminal
awplus(config)# interface br2
awplus(config-if)# mac-learning
```

**Command changes** Version 5.4.7-0.1: command added

# protocol ethii (macfilter)

**Overview** Use this command to add a bridge protocol filter for Ethernet II packets. If ether-type is not specified, then all Ethernet II packets match the rule.

If ether-type is specified, then only packets having the specified ether-type matches the rule.

Use the **no** variant of this command to remove the protocol filter.

**Syntax**

```
protocol <filter-name> {permit|deny} ethii
protocol <filter-name> {permit|deny} ethii ether-type
<ether-type>
protocol <filter-name> {permit|deny} ethii {after|before}
protocol <filter-name>
protocol <filter-name> {permit|deny} ethii ether-type
<ether-type> {after|before} protocol <filter-name>
no protocol <filter-name>
```

| Parameter | Description | |
|---|---|---|
| *<filter-name>* | Protocol filter name. | |
| permit | Allow the matched frame | |
| deny | Drop the matched frame | |
| ethii | Ethernet type II frame | |
| ether-type | Ethertype of Ethernet II frame | |
| *<ether-type>* | Ethertype (2 bytes in hexadecimal, e.g. 0800) or any of the well-known names.. | |
| | arp | ARP (Address Resolution Protocol), 0806 |
| | atmf | ATMF (Allied Telesis Management Framework), fbae |
| | atmf-agent | ATMF Agent, fbaf |
| | ip | IPv4 (Internet Protocol version 4), 0800 |
| | ipv6 | IPv6 (Internet Protocol version 6), 86dd |
| | loop | Loopback (Ethernet Configuration Testing Protocol), 9000 |
| | ppp | PPP (Point-to-Point Protocol), 880b |
| | pppoe-disc | PPPoE Discovery, 8863 |
| | pppoe-sess | PPPoE Session, 8864 |
| after | Add after the following protocol filter name | |
| before | Add before the following protocol filter name. | |

**Default** The default action is permit.

**Mode** MAC Filter Configuration

**Usage notes** This command adds or deletes a protocol filter for bridged traffic in Mac filter mode.

By default all protocols are permitted, but this can be changed by using the command: **default-protocol-action**.

This command, examines packets for each protocol filter in the configured order.

- If a denied protocol filter is matched, then the packet is immediately dropped without examining the rest of protocol filters and rules
- If a permitted protocol filter is matched, then the packet skips the rest of protocol filters and continues to examine rules.

**Example** To allow all IPv4 packets, use the commands:

```
awplus# configure terminal
awplus(config)# mac-filter ATL-router1
awplus(config-macfilter)# protcol 1 permit ethii ether-type ip
```

**Related commands**

rule (macfilter)

rule ip (macfilter)

rule ipv6 (macfilter)

default-protocol-action

show mac-filter

clear mac-filter counter

**Command changes** Version 5.4.8-0.2: command added

# protocol novell (macfilter)

**Overview** Use this command to add a bridge protocol filter for Novell raw IEEE 802.3 packets..

Use the **no** variant of this command to remove the protocol filter.

**Syntax**

```
protocol <filter-name> {permit|deny} novell
protocol <filter-name> {permit|deny} novell {after|before}
protocol <filter-name>
no protocol <filter-name>
```

| Parameter | Description |
|---|---|
| *<filter-name>* | Protocol filter name. |
| permit | Allow the matched frame |
| deny | Drop the matched frame |
| novell | Novell raw IEEE 802.3 |
| after | Add after the following protocol filter name |
| before | Add before the following protocol filter name. |

**Default** The default action is permit.

**Mode** MAC Filter Configuration

**Usage notes** This command adds or deletes a protocol filter for bridged traffic in Mac filter mode.

By default all protocols are permitted, but this can be changed by using the command: **default-protocol-action**.

This command, examines packets for each protocol filter in the configured order.

- If a denied protocol filter is matched, then the packet is immediately dropped without examining the rest of protocol filters and rules
- If a permitted protocol filter is matched, then the packet skips the rest of protocol filters and continues to examine rules.

**Example** To allow all Novell IEEE 802.3 packets, use the commands:

```
awplus# configure terminal
awplus(config)# mac-filter ATL-router1
awplus(config-macfilter)# protcol 1 permit novell
```

**Related commands**

rule (macfilter)

rule ip (macfilter)

rule ipv6 (macfilter)

default-protocol-action

show mac-filter

clear mac-filter counter

**Command changes**

Version 5.4.8-0.2: command added

# protocol sap (macfilter)

**Overview** Use this command to add a bridge protocol filter for IEEE 802.3 packets. If sap-type is not specified, then all IEEE 802.3 packets (including Novell raw IEEE 802.3, IEEE 802.3 with 802.2 LLC and IEEE 802.3 with 802.2 SNAP) match the rule.

If sap-type is specified, then only packets having the specified sap-type matches the rule.

Use the **no** variant of this command to remove the protocol filter.

**Syntax**

```
protocol <filter-name> {permit|deny} sap
protocol <filter-name> {permit|deny} sap sap-type <sap-type>
protocol <filter-name> {permit|deny} sap {after|before}
protocol <filter-name>
protocol <filter-name> {permit|deny} sap sap-type <sap-type>
{after|before} protocol <filter-name>
no protocol <filter-name>
```

| Parameter | Description |
|---|---|
| *<filter-name>* | Protocol filter name. |
| permit | Allow the matched frame |
| deny | Drop the matched frame |
| sap | SAP (IEEE 802.3) |
| sap-type | SAP type |
| *<sap-type>* | SAP type value (1 byte in hexadecimal, e.g. e0) |
| after | Add after the following protocol filter name |
| before | Add before the following protocol filter name. |

**Default** The default action is permit. You can change the default by using the command: **default-protocol-action**.

**Mode** MAC Filter Configuration

**Usage notes** This command adds or deletes a protocol filter for bridged traffic in Mac filter mode.

This command, examines packets for each protocol filter in the configured order.

- If a denied protocol filter is matched, then the packet is immediately dropped without examining the rest of protocol filters and rules
- If a permitted protocol filter is matched, then the packet skips the rest of protocol filters and continues to examine rules.

**Example**

To allow Novell Netware SAP type of 802.2 packets, use the commands:

```
awplus# configure terminal
awplus(config)# mac-filter ATL-router1
awplus(config-macfilter)# protcol 2 permit sap sap-type e0
```

**Related commands**

rule (macfilter)

rule ip (macfilter)

rule ipv6 (macfilter)

default-protocol-action

show mac-filter

clear mac-filter counter

**Command changes**

Version 5.4.8-0.2: command added

# protocol snap (macfilter)

**Overview** Use this command to add a bridge protocol filter for SNAP (IEEE 802.3 with 802.2 SNAP) packets. If snap-type is not specified, then all snap packets match the rule.

If snap-type is specified, then only packets having the specified snap-type matches the rule.

Use the **no** variant of this command to remove the protocol filter.

**Syntax**

```
protocol <filter-name> {permit|deny} snap
protocol <filter-name> {permit|deny} snap-type <snap-type>
protocol <filter-name> {permit|deny} snap {after|before}
protocol <filter-name>
protocol <filter-name> {permit|deny} snap snap-type <snap-type>
{after|before} protocol <filter-name>
no protocol <filter-name>
```

| Parameter | Description |
|---|---|
| *<filter-name>* | Protocol filter name. |
| permit | Allow the matched frame |
| deny | Drop the matched frame |
| snap | IEEE 802.2 SNAP |
| snap-type | SNAP type |
| *<snap-type>* | SNAP protocol ID (2 bytes in hexadecimal, e.g. 0800) |
| after | Add after the following protocol filter name |
| before | Add before the following protocol filter name. |

**Default** The default action is permit.

**Mode** MAC Filter Configuration

**Usage notes** This command adds or deletes a protocol filter for bridged traffic in Mac filter mode.

By default all protocols are permitted, but this can be changed by using the command: **default-protocol-action**.

This command, examines packets for each protocol filter in the configured order.

- If a denied protocol filter is matched, then the packet is immediately dropped without examining the rest of protocol filters and rules
- If a permitted protocol filter is matched, then the packet skips the rest of protocol filters and continues to examine rules.

**Example**

To allow all SNAP packets, use the commands:

```
awplus# configure terminal
awplus(config)# mac-filter ATL-router1
awplus(config-macfilter)# protcol 3 permit snap
```

**Related commands**

rule (macfilter)

rule ip (macfilter)

rule ipv6 (macfilter)

default-protocol-action

show mac-filter

clear mac-filter counter

**Command changes**

Version 5.4.8-0.2: command added

# rule (macfilter)

**Overview** Use this command to add a filter rule to a specified mac-filter. The filter rule can also be configured to run after or before the specified rule.

Use the **no** variant of this command to remove a filter rule.

**Syntax**

```
rule <rule-name> {deny|permit} [dmac {<mac-addr>|any}] [smac
{<mac-addr>|any}] [proto {<ether-type>|any}] [offset <0-1499>
hex-string <match-string>] [{after|before} rule <rule-name>]
```

```
no rule <rule-name>
```

| Parameter | Description |
|---|---|
| *<rule-name>* | The name of the rule (maximum of 16 characters) |
| deny | Drop the matched frame |
| permit | Allow the matched frame |
| dmac | Destination MAC address |
| smac | Source MAC address |
| *<mac-addr>* | MAC address in HHHH.HHHH.HHHH format |
| *<ether-type>* | Ethernet protocol type |
| offset | Offset of Ethernet data to match |
| *<0-1499>* | Offset value (0 is the beginning of the Ethernet data) |
| hex-string | Match with the specified hexadecimal string |
| *<match-string>* | String to match in hexadecimal (e.g. 01ab) |
| after | Add after the following rule name |
| before | Add before the following rule name |
| rule <rule-name> | Mac Filter rule |

**Mode** MAC Filter Configuration

**Usage notes** The filter rule can specify any combination of the following:

- destination MAC address
- source MAC address
- Ethernet protocol type
- string match from a specific offset of Ethernet data

**Example** To configure a bridge filter rule (RULE1) that permits any destination MAC address with the source address of 00c4.6d20.c0f4 with any protocol, use the following commands:

```
awplus# configure terminal
awplus(config)# mac-filter ATL-router1
awplus(config-macfilter)# rule RULE1 permit dmac any smac
00c4.6d20.c0f4 proto any
```

**Example** To configure a bridge filter rule (RULE2) that permits any broadcast traffic with 0xF2 at the offset of 28 (29th byte) in the Ethernet data, use the following commands:

```
awplus# configure terminal
awplus(config)# mac-filter ATL-router1
awplus(config-macfilter)# rule RULE2 permit dmac ffff.ffff.ffff
offset 28 hex-string f2
```

**Related commands**

show mac-filter

clear mac-filter counter

rule ip (macfilter)

rule ipv6 (macfilter)

**Command changes** Version 5.4.8-0.2: command added

# rule ip (macfilter)

**Overview** Use this command to add a bridge filter rule based on the IP protocol.

Use the **no** variant of this command to remove a bridge IP protocol filter.

**Syntax**

```
rule <name> {deny|permit} ip [src {<ip-addr>|<ip-subnet>}]
[dst {<ip-addr>|<ip-subnet>}] [proto <1-255>] [{after|before}
rule <name>]
```

```
rule <name> {deny|permit} ip [src {<ip-addr>|<ip-subnet>}]
[dst {<ip-addr>|<ip-subnet>}] [proto {tcp|udp} [sport
<1-65535>] [dport <1-65535>]] [{after|before} rule <name>]
```

```
no rule <name>
```

| Parameter | Description |
|---|---|
| *<name>* | Rule name |
| deny | Drop the matched frame |
| permit | Permit the matched frame |
| src *<ip-addr>* | Source IP address |
| src *<ip-subnet>* | Source IP address with subnet prefix length |
| dst *<ip-addr>* | Destination IP address |
| dst *<ip-subnet>* | Destination IP address with subnet prefix length |
| proto *<1-255>* | IP protocol number |
| proto tcp | TCP protocol |
| proto udp | UDP protocol |
| sport *<1-65535>* | TCP or UDP source port number |
| dport *<1-65535>* | TCP or UDP destination port number |
| after | Add after the following rule name |
| before | Add before the following rule name |
| rule *<name>* | MAC Filter rule name |

**Mode** MAC Filter Configuration

**Example** To add a bridge filter rule that permits IP packets with a source address of 192.168.1.1 and a destination address of 10.0.0.0/8 using the TCP protocol to destination port 23, use the following commands:

```
awplus# configure terminal
```

```
awplus(config)# mac-filter ATL-router1
```

```
awplus(config-macfilter)# rule 1 permit ip scr 192.168.1.1 dst
10.0.0.0/8 proto tcp dport 23
```

**Related commands**

show mac-filter

rule (macfilter)

default-protocol-action

**Command changes**

Version 5.4.8-0.2: command added

# rule ipv6 (macfilter)

**Overview** Use this command to add a bridge filter rule based on the IPv6 protocol.

Use the **no** variant of this command to remove a bridge IPv6 protocol filter.

**Syntax**

```
rule <name> {deny|permit} ipv6 [src
{<ipv6-addr>|<ipv6-addr/prefix-length>}]
[dst {<ipv6-addr>|<ipv6-addr/prefix-length>}] [proto <1-255>]
[{after|before} rule <name>]
```

```
rule <name> {deny|permit} ipv6 [src
{<ipv6-addr>|<ipv6-addr/prefix-length>}]
[dst {<ipv6-addr>|<ipv6-addr/prefix-length>}] [proto {tcp|udp}
[sport <1-65535>] [dport <1-65535>]] [{after|before} rule
<name>]
```

```
no rule <name>
```

| Parameter | Description |
|---|---|
| `<name>` | Rule name |
| `deny` | Drop the matched frame |
| `permit` | Permit the matched frame |
| `src <ipv6-addr>` | Source IPv6 address |
| `src <ipv6-addr/prefix-length>` | Source IPv6 address with subnet prefix length |
| `dst <ipv6-addr>` | Destination IPv6 address |
| `dst <ipv6-addr/prefix-length>` | Destination IPv6 address with subnet prefix length |
| `proto <1-255>` | IPv6 protocol number |
| `proto tcp` | TCP protocol |
| `proto udp` | UDP protocol |
| `sport <1-65535>` | TCP or UDP source port number |
| `dport <1-65535>` | TCP or UDP destination port number |
| `after` | Add after the following rule name |
| `before` | Add before the following rule name |
| `rule <name>` | MAC Filter rule name |

**Mode** MAC Filter Configuration

**Example**

To add a bridge filter rule that permits IPv6 packets with a source address of 2001::1 and a destination address of 3001::/64 using the TCP protocol to destination port 23, use the following commands:

```
awplus# configure terminal
awplus(config)# mac-filter ATL-router1
awplus(config-macfilter)# rule 1 permit ipv6 scr 2001::1 dst
3001::/64 proto tcp dport 23
```

**Related commands**

show mac-filter

rule (macfilter)

protocol sap (macfilter)

**Command changes**

Version 5.4.8-0.2: command added

# show bridge

**Syntax** Use this command to display detailed information about your bridge(s).

**Syntax** `show bridge [<bridge-list>]`

| Parameter | Description |
|---|---|
| *<bridge-list>* | The bridge/s to display the information about.<br>The *<bridge-list>* can be:<br>• a single bridge(e.g. br2)<br>• a continuous range of bridges (e.g. br1-3)<br>• a comma separated list of bridges and/or ranges (e.g. br1,br2,br3-br5) |

**Default** Displays detailed information about all bridges, if no *<bridge-list>* is specified.

**Mode** Privileged Exec

**Examples** To display information about all bridges, use the following command:

```
awplus#show bridge
```

To display information about bridge 2, use the following command:

```
awplus#show bridge br2
```

To display information about bridge in the range 1 to 3, use the following command:

```
awplus#show bridge br1-3
```

To display information about bridges 1, and from 3 to 5, use the following command:

```
awplus#show bridge br1,br3-5
```

**Output** Figure 16-2: Example output from the **show bridge** command displaying information about all bridges:

```
awplus#show bridge
Bridge Name     Aging Timer     Interfaces
-----------------------------------------
br1             300             eth1
br3             300
br4             300
br5             300
```

Figure 16-3: Example output from the **show bridge** command displaying information about bridge 1.

```
awplus#show bridge br1
Bridge Name     Aging Timer     Interfaces
----------------------------------------
br1             300             eth1
```

**Related commands**

ageing-time

bridge

bridge-group

show bridge macaddr

# show bridge macaddr

**Overview** Use this command to display the MAC entries learned in the MAC table for your bridge.

**Syntax**

```
show bridge macaddr <bridge-list>
```

| Parameter | Description |
|---|---|
| *<bridge-list>* | The bridge interfaces to display the information about. The *<bridge-list>* can be:<br>• a single bridge (e.g. br2)<br>• a continuous range of bridges (e.g. br1-3)<br>• a comma separated list of bridges and/or ranges (e.g. br1,br2,br3-br5) |

**Mode** Global Configuration

**Example** To display the learned MAC entries for bridge 2, use the following commands:

```
awplus# configure terminal
awplus(config)# show bridge macaddr br2
```

**Output** Figure 16-4: Example output from the **show bridge macaddr** command displaying information about bridge 2:

```
awplus#show bridge macaddr br2
Bridge Name   Interface    mac addr              is local?  ageing
-----------------------------------------------------------------
br2           vlan1        ec:cd:6d:20:c0:fb     no         41
br2           vlan1        00:c4:6d:20:c0:e6     no          0
br2           vlan1        ec:cd:6d:20:c0:bd     yes         0
...
```

**Related commands**

ageing-time

bridge

bridge-group

show bridge

# show mac-filter

**Overview** This command displays configured protocol filters and rules along with packet and byte counts on a bridge or an interface that is a member of a bridge.

**Syntax** `show mac-filter [<interface-name>]`

| Parameter | Description |
|---|---|
| *<interface-name>* | The interface name. Mac-filters applied to this interface will be displayed. |

**Default** Displays all MAC filters, rules, and counters for all interfaces on a bridge.

**Mode** Privileged Exec

**Examples** To display all MAC filters, rules, and counters for all interfaces on a bridge, use the following command:

```
awplus#show mac-filter
```

**Output** Figure 16-5: Example output from **show mac-filter**

```
awplus#show mac-filter
Iface            Rule         Options                                Pkt Count
                 Dir / Action                                       Byte Count
-------------------------------------------------------------------------------
br1              a            Protocol   : Ethernet II                      0
                 in  / deny   Ether-type : ip                               0
br1              Protocol (default action)                                  0
                 in  / permit                                               0
br1              Rule (default action)                                      0
                 in  / permit                                               0
vlan1            1            IPv4 Src   : any                             0
                 out / deny        Dst   : 192.168.1.20                     0
                                   Proto: any
vlan1            2            IPv6 Src   : any                             0
                 out / deny        Dst   : 2001::20                         0
                                   Proto: any
vlan1            20           DMAC  : any                                  0
                 out / permit SMAC  : any                                  0
                              Proto : 0x0800
vlan1            30           DMAC  : any
                 out / permit SMAC  : any                                  0
                              Proto : any                                  0
                              Offset: 10
                              String: 010203abcd
vlan1            Rule (default action)                                      0
                 out / deny                                                 0
```

**Related commands** mac-filter

mac-filter-group

**Command changes** Version 5.4.8-0.2: command updated

# 17 VLAN Commands

## Introduction

**Overview** This chapter provides an alphabetical reference of commands used to configure VLANs. For more information see the VLAN Feature Overview and Configuration Guide.

**Command List**


- "show vlan" on page 558
- "switchport access vlan" on page 559
- "switchport mode access" on page 560
- "switchport mode trunk" on page 561
- "switchport trunk allowed vlan" on page 562
- "switchport trunk native vlan" on page 565
- "switchport voice dscp" on page 566
- "switchport voice vlan" on page 567
- "switchport voice vlan priority" on page 569
- "vlan" on page 570
- "vlan database" on page 572

# show vlan

**Overview** Use this command to display information about a particular VLAN by specifying its VLAN ID. Selecting **all** will display information for all the VLANs configured.

**Syntax**

```
show vlan
{all|brief|dynamic|static|auto|static-ports|<1-4094>}
```

| Parameter | Description |
|---|---|
| *<1-4094>* | Display information about the VLAN specified by the VLAN ID. |
| `all` | Display information about all VLANs on the device. |
| `brief` | Display information about all VLANs on the device. |
| `dynamic` | Display information about all VLANs learned dynamically. |
| `static` | Display information about all statically configured VLANs. |
| `auto` | Display information about all auto-configured VLANs. |
| `static-ports` | Display static egress/forbidden ports. |

**Mode** User Exec and Privileged Exec

**Example** To display information about VLAN 2, use the command:

```
awplus# show vlan 2
```

**Output** Figure 17-1: Example output from the **show vlan** command

```
VLAN ID  Name            Type    State   Member ports
                                         (u)-Untagged, (t)-Tagged
======= ================ ======= ======= ===================================
2       VLAN0002         STATIC  ACTIVE  port1.0.3(u) port1.0.4(u) port1.0.5(u)
                                         port1.0.6(u)
...
```

**Related commands** vlan

**Command changes** Version 5.5.0-1.3: Support for up to 5 VLANs added to AR1050V

# switchport access vlan

**Overview**

Use this command to change the port-based VLAN of the current port.

Use the **no** variant of this command to change the port-based VLAN of this port to the default VLAN, VLAN 1.

**Syntax**

```
switchport access vlan <vlan-id>
no switchport access vlan
```

| Parameter | Description |
|---|---|
| *<vlan-id>* | <1-4094> The port-based VLAN ID for the port. |

**Default**

VLAN 1

**Mode**

Interface Configuration

**Usage notes**

Any untagged frame received on this port will be associated with the specified VLAN.

**Examples**

To change the port-based VLAN to VLAN 3 for port1.0.2, use the commands:

```
awplus# configure terminal
awplus(config)# interface port1.0.2
awplus(config-if)# switchport access vlan 3
```

To reset the port-based VLAN to the default VLAN 1 for port1.0.2, use the commands:

```
awplus# configure terminal
awplus(config)# interface port1.0.2
awplus(config-if)# no switchport access vlan
```

**Related commands**

show interface switchport

show vlan

**Command changes**

Version 5.5.0-1.3: Support for up to 5 VLANs added to AR1050V

# switchport mode access

**Overview** Use this command to set the switching characteristics of the port to access mode. Received frames are classified based on the VLAN characteristics, then accepted or discarded based on the specified filtering criteria.

**Syntax**

```
switchport mode access [ingress-filter {enable|disable}]
```

| Parameter | Description |
|---|---|
| `ingress-filter` | Set the ingress filtering for the received frames. |
| `enable` | Turn on ingress filtering for received frames. This is the default. |
| `disable` | Turn off ingress filtering to accept frames that do not meet the classification criteria. |

**Default** By default, ports are in access mode with ingress filtering on.

**Usage notes** Use access mode to send untagged frames only.

**Mode** Interface Configuration

**Example**

```
awplus# configure terminal
awplus(config)# interface port1.0.2
awplus(config-if)# switchport mode access ingress-filter enable
```

**Related Commands** show interface switchport

**Command changes** Version 5.5.0-1.3: Support for up to 5 VLANs added to AR1050V

# switchport mode trunk

**Overview** Use this command to set the switching characteristics of the port to trunk. Received frames are classified based on the VLAN characteristics, then accepted or discarded based on the specified filtering criteria.

**Syntax**

```
switchport mode trunk [ingress-filter {enable|disable}]
```

| Parameter | Description |
|---|---|
| `ingress-filter` | Set the ingress filtering for the frames received. |
| `enable` | Turn on ingress filtering for received frames. This is the default. |
| `disable` | Turn off ingress filtering to accept frames that do not meet the classification criteria. |

**Default** By default, ports are in access mode, are untagged members of the default VLAN (VLAN 1), and have ingress filtering on.

**Mode** Interface Configuration

**Usage notes** A port in trunk mode can be a tagged member of multiple VLANs, and an untagged member of one native VLAN.

To configure which VLANs this port will trunk for, use the switchport trunk allowed vlan command.

**Example**

```
awplus# configure terminal
awplus(config)# interface port1.0.3
awplus(config-if)# switchport mode trunk ingress-filter enable
```

**Related Commands** show interface switchport

**Command changes** Version 5.5.0-1.3: Support for up to 5 VLANs added to AR1050V

# switchport trunk allowed vlan

**Overview** Use this command to add VLANs to be trunked over this switch port. Traffic for these VLANs can be sent and received on the port.

Use the **no** variant of this command to reset switching characteristics of a specified interface to negate a trunked configuration specified with **switchport trunk allowed vlan** command.

**Syntax**

```
switchport trunk allowed vlan all
switchport trunk allowed vlan none
switchport trunk allowed vlan add <vid-list>
switchport trunk allowed vlan remove <vid-list>
switchport trunk allowed vlan except <vid-list>
no switchport trunk
```

| Parameter | Description |
|---|---|
| `all` | Allow all VLANs to transmit and receive through the port. |
| `none` | Allow no VLANs to transmit and receive through the port. |
| `add` | Add a VLAN to the list of VLANs that are allowed to transmit and receive through the port. Only use this parameter if a list of VLANs is already configured on a port. |
| `remove` | Remove a VLAN from the list of VLANs that are allowed to transmit and receive through the port. Only use this parameter if a list of VLANs is already configured on a port.<br>If you are removing VLAN port membership for a large number of switchports and VLANs, note that this command may take a number of minutes to run. |
| `except` | All VLANs, except the VLAN for which the VID is specified, are part of its port member set. Only use this parameter to remove VLANs after either this parameter or the **all** parameter have added VLANs to a port. |
| `<vid-list>` | <2-4094> The ID of the VLAN or VLANs that will be added to, or removed from, the port. A single VLAN, VLAN range, or comma-separated VLAN list can be set.<br>For a VLAN range, specify two VLAN numbers: lowest, then highest number in the range, separated by a hyphen.<br>For a VLAN list, specify the VLAN numbers separated by commas.<br>Do not enter spaces between hyphens or commas when setting parameters for VLAN ranges or lists. |

**Default** By default, ports are untagged members of the default VLAN (VLAN 1).

**Mode** Interface Configuration

## Usage notes

The **all** parameter sets the port to be a tagged member of all the VLANs configured on the device. The **none** parameter removes all VLANs from the port's tagged member set. The **add** and **remove** parameters will add and remove VLANs to and from the port's member set. The **except** parameter creates an exception to the list.

If you use the **all** parameter, and then you want to remove VLANs from the port's member list, you must use the **except** parameter to remove the unwanted VLANs. Similarly, if you use the **except** parameter to remove a list of VLANs, and you want to change that list, you must use the **except** parameter to make that change (not the **add** and **remove** parameters).

For example, if you want to remove VLAN3-5 from a port and the port's configuration is currently **switchport trunk allowed vlan all**, then you should remove VLAN3-5 by entering the **except** parameter, instead of using the **remove** parameter. This means using the following commands:

```
awplus# configure terminal
awplus(config)# interface port1.0.6
awplus(config-if)# switchport trunk allowed vlan except 3-5
```

If you do this, then the configuration changes to:

```
awplus#show running-config
interface port1.0.6
switchport
switchport mode trunk
switchport trunk allowed vlan except 3-5
```

For example, if you want to add VLAN4 back in again, and the port configuration is currently **switchport trunk allowed vlan except 3-5**, then you should add VLAN4 by re-entering the **except** parameter with the list of VLANs to remove, instead of using the **add** parameter. This means using the following commands:

```
awplus# configure terminal
awplus(config)# interface port1.0.6
awplus(config-if)# switchport trunk allowed vlan except 3,5
```

If you do this, then the configuration changes to:

```
awplus#show running-config
interface port1.0.6
switchport
switchport mode trunk
switchport trunk allowed vlan except 3,5
```

## Examples

The following shows adding a single VLAN to a port's member set.

```
awplus# configure terminal
awplus(config)# interface port1.0.2
awplus(config-if)# switchport trunk allowed vlan add 2
```

The following shows adding a range of VLANs to a port's member set.

```
awplus# configure terminal
awplus(config)# interface port1.0.2
awplus(config-if)# switchport trunk allowed vlan add 2-4
```

The following shows adding a list of VLANs to a port's member set.

```
awplus# configure terminal
awplus(config)# interface port1.0.2
awplus(config-if)# switchport trunk allowed vlan add 2,3,4
```

**Command changes**

Version 5.5.0-1.3: Support for up to 5 VLANs added to AR1050V

# switchport trunk native vlan

**Overview** Use this command to configure the native VLAN for this port. The native VLAN is used for classifying the incoming untagged packets. Use the **none** parameter with this command to remove the native VLAN from the port and set the acceptable frame types to VLAN-tagged only.

Use the **no** variant of this command to reset the native VLAN to the default VLAN ID 1 and remove tagged VLANs from the port.

**Syntax**

```
switchport trunk native vlan {<vid>|none}
no switchport trunk native vlan
```

| Parameter | Description |
|---|---|
| *<vid>* | The ID of the VLAN that will be used to classify the incoming untagged packets, in the range 2-2094. The VLAN ID must be a part of the VLAN member set of the port. |
| none | No native VLAN specified. This option removes the native VLAN from the port and sets the acceptable frame types to vlan-tagged only. Note: Use the **no** variant of this command to revert to the default VLAN 1 as the native VLAN for the specified interface switchport - not **none**. |

**Default** VLAN 1 (the default VLAN), which is reverted to using the **no** form of this command.

**Mode** Interface Configuration

**Examples** To set the native VLAN on interface port1.0.2 to VLAN 2, use the commands:

```
awplus# configure terminal
awplus(config)# interface port1.0.2
awplus(config-if)# switchport trunk native vlan 2
```

To remove the native VLAN from interface port1.0.2, use the commands:

```
awplus# configure terminal
awplus(config)# interface port1.0.2
awplus(config-if)# switchport trunk native vlan none
```

To reset the native VLAN on interface port1.0.2 to the default VLAN 1, use the commands:

```
awplus# configure terminal
awplus(config)# interface port1.0.2
awplus(config-if)# no switchport trunk native vlan
```

**Command changes** Version 5.5.0-1.3: Support for up to 5 VLANs added to AR1050V

# switchport voice dscp

**Overview** Use this command for a specific port to configure the Layer 3 DSCP value advertised when the transmission of LLDP-MED Network Policy TLVs for voice devices is enabled. When LLDP-MED capable IP phones receive this network policy information, they transmit voice data with the specified DSCP value.

Use the **no** variant of this command to reset the DSCP value to the default, 0.

**Syntax**

```
switchport voice dscp <0-63>
no switchport voice dscp
```

| Parameter | Description |
|---|---|
| dscp | Specify a DSCP value for voice data. |
| <0-63> | DSCP value. |

**Default** A DSCP value of 0 will be advertised.

**Mode** Interface Configuration

**Usage notes** LLDP-MED advertisements including Network Policy TLVs are transmitted via a port if:

- LLDP is enabled (lldp run command)
- Voice VLAN is configured for the port (switchport voice vlan command)
- The port is configured to transmit LLDP advertisements—enabled by default (lldp transmit receive command)
- The port is configured to transmit Network Policy TLVs—enabled by default (lldp med-tlv-select command)
- There is an LLDP-MED device connected to the port

**Example** To tell IP phones connected to port1.0.2 to send voice data with DSCP value 27, use the commands:

```
awplus# configure terminal
awplus(config)# interface port1.0.2
awplus(config-if)# switchport voice dscp 27
```

**Related commands**

lldp med-tlv-select

show lldp

switchport voice vlan

# switchport voice vlan

**Overview** Use this command to configure the Voice VLAN tagging advertised when the transmission of LLDP-MED Network Policy TLVs for voice endpoint devices is enabled. When LLDP-MED capable IP phones receive this network policy information, they transmit voice data with the specified tagging. This command also sets the ports to be spanning tree edge ports, that is, it enables spanning tree portfast on the ports.

Use the **no** variant of this command to remove LLDP-MED network policy configuration for voice devices connected to these ports. This does not change the spanning tree edge port status.

**Syntax**

```
switchport voice vlan [<vid>|dot1p|dynamic|untagged]
no switchport voice vlan
```

| Parameter | Description |
|---|---|
| `dot1p` | The IP phone should send User Priority tagged packets, that is, packets in which the tag contains a User Priority value, and a VID of 0. (The User Priority tag is also known as the 802.1p priority tag, or the Class of Service (CoS) tag.) |
| `dynamic` | The VLAN ID with which the IP phone should send tagged packets will be assigned by RADIUS authentication. |
| `untagged` | The IP phone should send untagged packets. |

**Default** By default, no Voice VLAN is configured, and therefore no network policy is advertised for voice devices.

**Mode** Interface Configuration

**Usage notes** LLDP-MED advertisements including Network Policy TLVs are transmitted via a port if:

- LLDP is enabled (lldp run command)
- Voice VLAN is configured for the port using this command (switchport voice vlan)
- The port is configured to transmit LLDP advertisements—enabled by default (lldp transmit receive command)
- The port is configured to transmit Network Policy TLVs—enabled by default (lldp med-tlv-select command)
- There is an LLDP-MED device connected to the port.

To set the priority value to be advertised for tagged frames, use the switchport voice vlan priority command.

If the Voice VLAN details are to be assigned by RADIUS, then the RADIUS server must be configured to send the attribute “Egress-VLANID (56)” or

"Egress-VLAN-Name (58)" in the RADIUS Accept message when authenticating a phone attached to this port.

**Examples**

To tell IP phones connected to port1.0.4 to send voice data tagged for VLAN 10, use the commands:

```
awplus# configure terminal
awplus(config)# interface port1.0.4
awplus(config-if)# switchport voice vlan 10
```

To tell IP phones connected to port1.0.2-port1.0.8 to send priority tagged packets (802.1p priority tagged with VID 0, so that they will be assigned to the port VLAN) use the following commands. The priority value is 5 by default, but can be configured with the switchport voice vlan priority command.

```
awplus# configure terminal
awplus(config)# interface port1.0.2-port1.0.8
awplus(config-if)# switchport voice vlan dot1p
```

To dynamically configure the VLAN ID advertised to IP phones connected to port1.0.1 based on the VLAN assigned by RADIUS authentication (with RADIUS attribute "Egress- VLANID" or "Egress-VLAN-Name" in the RADIUS accept packet), use the commands:

```
awplus# configure terminal
awplus(config)# interface port1.0.1
awplus(config-if)# switchport voice vlan dynamic
```

To remove the Voice VLAN, and therefore disable the transmission of LLDP-MED network policy information for voice devices on port1.0.8, use the following commands:

```
awplus# configure terminal
awplus(config)# interface port1.0.8
awplus(config-if)# no switchport voice vlan
```

**Related commands**

switchport voice dscp

switchport voice vlan priority

# switchport voice vlan priority

**Overview** Use this command to configure the Layer 2 user priority advertised when the transmission of LLDP-MED Network Policy TLVs for voice devices is enabled. This is the priority in the User Priority field of the IEEE 802.1Q VLAN tag, also known as the Class of Service (CoS), or 802.1p priority. When LLDP-MED capable IP phones receive this network policy information, they transmit voice data with the specified priority.

**Syntax**

```
switchport voice vlan priority <0-7>
no switchport voice vlan priority
```

| Parameter | Description |
|---|---|
| `priority` | Specify a user priority value for voice data. |
| `<0-7>` | Priority value. |

# vlan

**Overview** This command creates VLANs, assigns names to them, and enables or disables them. Disabling the VLAN causes all forwarding over the specified VLAN ID to cease. Enabling the VLAN allows forwarding of frames on the specified VLAN.

You can create a management-only VLAN that contains only one member port and may be used as a remote management port. Management-only VLANs process packets in the CPU rather than in hardware. See the parameter table below for more detail.

The **no** variant of this command destroys the specified VLANs or returns their MTU to the default.

**Syntax**

```
vlan <vid> [name <vlan-name>] [state
{enable|disable|management-only}]
vlan <vid-range> [state {enable|disable|management-only}]
vlan {<vid>|<vlan-name>} [mtu <mtu-value>]
no vlan {<vid>|<vid-range>} [mtu]
```

| Parameter | Description |
|---|---|
| `<vid>` | The VID of the VLAN to enable or disable, in the range 1-4094. |
| `<vlan-name>` | The ASCII name of the VLAN. Maximum length: 32 characters. |
| `<vid-range>` | Specifies a range of VLAN identifiers. |
| `<mtu-value>` | Specifies the Maximum Transmission Unit (MTU) size in bytes, in the range 68 to 1500 bytes, for the VLAN. |
| `enable` | Puts the VLAN into an enabled state. |
| `disable` | Puts the VLAN into a disabled state. |
| `management-only` | Management-only VLANs are VLANs which:<br>• have one and only one access port (no aggregators, trunk port etc.)<br>• do not route to/from other interfaces.<br>• process packets in the CPU, rather than in hardware.<br>• cannot be converted to a normal VLAN, nor can a normal VLAN be converted to a management-only VLAN. Delete and re-create the VLAN to convert a normal VLAN to/from a management-only VLAN. |

**Default** By default, VLANs are enabled when they are created.

**Mode** VLAN Configuration

**Examples**

To enable VLAN 45, use the commands:

```
awplus# configure terminal
awplus(config)# vlan database
awplus(config-vlan)# vlan 45 name accounts state enable
```

To destroy VLAN 45, use the commands:

```
awplus# configure terminal
awplus(config)# vlan database
awplus(config-vlan)# no vlan 45
```

To create a management-only VLAN with VID 100, use the commands:

```
awplus# configure terminal
awplus(config)# vlan database
awplus(config-vlan)# vlan 100 state management-only
```

**Related commands**

mtu

vlan database

show vlan

**Command changes**

Version 5.4.9-2.1: Parameter **management-only** added

Version 5.5.0-1.3: Support for up to 5 VLANs added to AR1050V

# vlan database

**Overview** Use this command to enter the VLAN Configuration mode. You can then add or delete a VLAN, or modify its values.

**Syntax** `vlan database`

**Mode** Global Configuration

**Example** In the following example, note the change to VLAN Configuration mode from Global Configuration mode:

```
awplus# configure terminal
awplus(config)# vlan database
awplus(config-vlan)#
```

**Related commands** vlan

**Command changes** Version 5.5.0-1.3: Support for up to 5 VLANs added to AR1050V

# 18 Spanning Tree Commands

## Introduction

**Overview** This chapter provides an alphabetical reference for commands used to configure RSTP, STP or MSTP. For information about spanning trees, including configuration procedures, see the STP Feature Overview and Configuration Guide.

**Command List**


- "clear spanning-tree statistics" on page 575
- "clear spanning-tree detected protocols (RSTP and MSTP)" on page 576
- "debug mstp (RSTP and STP)" on page 577
- "instance priority (MSTP)" on page 581
- "instance vlan (MSTP)" on page 583
- "region (MSTP)" on page 585
- "revision (MSTP)" on page 586
- "show debugging mstp" on page 587
- "show spanning-tree" on page 588
- "show spanning-tree brief" on page 591
- "show spanning-tree mst" on page 592
- "show spanning-tree mst config" on page 593
- "show spanning-tree mst detail" on page 594
- "show spanning-tree mst detail interface" on page 596
- "show spanning-tree mst instance" on page 598
- "show spanning-tree mst instance interface" on page 599
- "show spanning-tree mst interface" on page 600
- "show spanning-tree statistics" on page 601
- "show spanning-tree statistics instance" on page 603

- "show spanning-tree statistics instance interface" on page 604
- "show spanning-tree statistics interface" on page 606
- "show spanning-tree vlan range-index" on page 608
- "spanning-tree autoedge (RSTP and MSTP)" on page 609
- "spanning-tree cisco-interoperability (MSTP)" on page 610
- "spanning-tree edgeport (RSTP and MSTP)" on page 611
- "spanning-tree enable" on page 612
- "spanning-tree errdisable-timeout enable" on page 614
- "spanning-tree errdisable-timeout interval" on page 615
- "spanning-tree force-version" on page 616
- "spanning-tree forward-time" on page 617
- "spanning-tree guard root" on page 618
- "spanning-tree hello-time" on page 619
- "spanning-tree link-type" on page 620
- "spanning-tree max-age" on page 621
- "spanning-tree max-hops (MSTP)" on page 622
- "spanning-tree mode" on page 623
- "spanning-tree mst configuration" on page 624
- "spanning-tree mst instance" on page 625
- "spanning-tree mst instance path-cost" on page 626
- "spanning-tree mst instance priority" on page 628
- "spanning-tree mst instance restricted-role" on page 629
- "spanning-tree mst instance restricted-tcn" on page 631
- "spanning-tree path-cost" on page 632
- "spanning-tree portfast (STP)" on page 633
- "spanning-tree portfast bpdu-filter" on page 635
- "spanning-tree portfast bpdu-guard" on page 637
- "spanning-tree priority (bridge priority)" on page 639
- "spanning-tree priority (port priority)" on page 640
- "spanning-tree restricted-role" on page 641
- "spanning-tree restricted-tcn" on page 642
- "spanning-tree transmit-holdcount" on page 643
- "undebug mstp" on page 644

# clear spanning-tree statistics

**Overview** Use this command to clear all the STP BPDU (Bridge Protocol Data Unit) statistics.

**Syntax**

```
clear spanning-tree statistics
clear spanning-tree statistics [instance <mstp-instance>]
clear spanning-tree statistics [interface <port> [instance
<mstp-instance>]]
```

| Parameter | Description |
|---|---|
| *<port>* | The port to clear STP BPDU statistics for. The port may be a switch port (e.g. `port1.0.4`), a static channel group (e.g. `sa2`), or a dynamic (LACP) channel group (e.g. `po2`). |
| *<mstp-instance>* | The MSTP instance (MSTI - Multiple Spanning Tree Instance) to clear MSTP BPDU statistics. |

**Mode** User Exec and Privileged Exec

**Usage notes** Use this command with the **instance** parameter in MSTP mode. Specifying this command with the **interface** parameter only not the instance parameter will work in STP and RSTP mode.

**Examples**

```
awplus# clear spanning-tree statistics
awplus# clear spanning-tree statistics instance 1
awplus# clear spanning-tree statistics interface port1.0.2
awplus# clear spanning-tree statistics interface port1.0.2
instance 1
```

# clear spanning-tree detected protocols (RSTP and MSTP)

**Overview** Use this command to clear the detected protocols for a specific port, or all ports.

Use this command in RSTP or MSTP mode only.

**Syntax**

```
clear spanning-tree detected protocols [interface <port>]
```

| Parameter | Description |
|---|---|
| *<port>* | The port to clear detected protocols for. The port may be a switch port (e.g. `port1.0.4`), a static channel group (e.g. `sa2`), or a dynamic (LACP) channel group (e.g. `po2`). |

**Mode** Privileged Exec

**Example**

```
awplus# clear spanning-tree detected protocols
```

# debug mstp (RSTP and STP)

**Overview** Use this command to enable debugging for the configured spanning tree mode, and echo data to the console, at various levels. Note that although this command uses the keyword **mstp** it displays debugging output for RSTP and STP protocols as well the MSTP protocol.

Use the **no** variant of this command to disable spanning tree debugging.

**Syntax**

```
debug mstp {all|cli|protocol [detail]|timer [detail]}
debug mstp {packet {rx|tx} [decode] [interface <interface>]}
debug mstp {topology-change [interface <interface>]}
no debug mstp {all|cli|protocol [detail]|timer [detail]}
no debug mstp {packet {rx|tx} [decode] [interface <interface>]}
no debug mstp {topology-change [interface <interface>]}
```

| Parameter | Description |
|---|---|
| `all` | Echoes all spanning tree debugging levels to the console. |
| `cli` | Echoes spanning tree commands to the console. |
| `packet` | Echoes spanning tree packets to the console. |
| `rx` | Received packets. |
| `tx` | Transmitted packets. |
| `protocol` | Echoes protocol changes to the console. |
| `timer` | Echoes timer information to the console. |
| `detail` | Detailed output. |
| `decode` | Interprets packet contents |
| `topology-change` | Interprets topology change messages |
| `interface` | Keyword before <interface> placeholder to specify an interface to debug |
| *<interface>* | Placeholder used to specify the name of the interface to debug. |

**Mode** Privileged Exec and Global Configuration mode

**Usage 1** Use the **debug mstp topology-change interface** command to generate debugging messages when the device receives an indication of a topology change in a BPDU from another device. The debugging can be activated on a per-port basis. Although this command uses the keyword **mstp**, it displays debugging output for RSTP and STP protocols as well as the MSTP protocol.

Due to the likely volume of output, these debug messages are best viewed using the terminal monitor command before issuing the relevant **debug mstp**

command. The default terminal monitor filter will select and display these messages. Alternatively, the messages can be directed to any of the other log outputs by adding a filter for the MSTP application using log buffered (filter) command:

```
awplus# configure terminal
awplus(config)# log buffered program mstp
```

**Output 1**

```
awplus#terminal monitor
awplus#debug mstp topology-change interface port1.0.4
10:09:09 awplus MSTP[1409]: Topology change rcvd on port1.0.4 (internal)
10:09:09 awplus MSTP[1409]: Topology change rcvd on MSTI 1 port1.0.4
awplus#debug mstp topology-change interface port1.0.6
10:09:29 awplus MSTP[1409]: Topology change rcvd on port1.0.6 (external)
10:09:29 awplus MSTP[1409]: Topology change rcvd on MSTI 1 port1.0.6
```

**Usage 2** Use the **debug mstp packet rx|tx decode interface** command to generate debugging messages containing the entire contents of a BPDU displayed in readable text for transmitted and received xSTP BPDUs. The debugging can be activated on a per-port basis and transmit and receive debugging is controlled independently. Although this command uses the keyword **mstp**, it displays debugging output for RSTP and STP protocols as well as the MSTP protocol.

Due to the likely volume of output, these debug messages are best viewed using the terminal monitor command before issuing the relevant **debug mstp** command. The default terminal monitor filter will select and display these messages. Alternatively, the messages can be directed to any of the other log outputs by adding a filter for the MSTP application using the log buffered (filter) command:

```
awplus(config)# log buffered program mstp
```

**Output 2** In MSTP mode - an MSTP BPDU with 1 MSTI:

```
awplus#terminal monitor
awplus#debug mstp packet rx decode interface port1.0.4
17:23:42 awplus MSTP[1417]: port1.0.4 xSTP BPDU rx - start
17:23:42 awplus MSTP[1417]: Protocol version: MSTP, BPDU type: RST
17:23:42 awplus MSTP[1417]: CIST Flags:  Agree Forward Learn role=Desig
17:23:42 awplus MSTP[1417]: CIST root id      : 0000:0000cd1000fe
17:23:42 awplus MSTP[1417]: CIST ext pathcost : 0
17:23:42 awplus MSTP[1417]: CIST reg root id  : 0000:0000cd1000fe
17:23:42 awplus MSTP[1417]: CIST port id      : 8001 (128:1)
17:23:42 awplus MSTP[1417]: msg age: 0 max age: 20 hellotime: 2 fwd delay: 15
17:23:42 awplus MSTP[1417]: Version 3 length : 80
17:23:42 awplus MSTP[1417]: Format id      : 0
17:23:42 awplus MSTP[1417]: Config name    : test
17:23:42 awplus MSTP[1417]: Revision level : 0
17:23:42 awplus MSTP[1417]: Config digest  : 3ab68794d602fdf43b21c0b37ac3bca8
17:23:42 awplus MSTP[1417]: CIST int pathcost : 0
17:23:42 awplus MSTP[1417]: CIST bridge id    : 0000:0000cd1000fe
17:23:42 awplus MSTP[1417]: CIST hops remaining : 20
17:23:42 awplus MSTP[1417]: MSTI flags           : Agree Forward Learn role=Desig
17:23:42 awplus MSTP[1417]: MSTI reg root id     : 8001:0000cd1000fe
17:23:42 awplus MSTP[1417]: MSTI pathcost        : 0
17:23:42 awplus MSTP[1417]: MSTI bridge priority : 32768 port priority : 128
17:23:42 awplus MSTP[1417]: MSTI hops remaining  : 20
17:23:42 awplus MSTP[1417]: port1.0.4 xSTP BPDU rx - finish
```

In STP mode transmitting a TCN BPDU:

```
awplus#terminal monitor
awplus#debug mstp packet tx decode interface port1.0.4
17:28:09 awplus MSTP[1417]: port1.0.4 xSTP BPDU tx - start
17:28:09 awplus MSTP[1417]: Protocol version: STP, BPDU type: TCN
17:28:09 awplus MSTP[1417]: port1.0.4 xSTP BPDU tx - finish
```

In STP mode receiving an STP BPDU:

```
awplus#terminal monitor
awplus#debug mstp packet rx decode interface port1.0.4
17:31:36 awplus MSTP[1417]: port1.0.4 xSTP BPDU rx - start
17:31:36 awplus MSTP[1417]: Protocol version: STP, BPDU type: Config
17:31:36 awplus MSTP[1417]: Flags:  role=none
17:31:36 awplus MSTP[1417]: Root id      : 8000:0000cd1000fe
17:31:36 awplus MSTP[1417]: Root pathcost : 0
17:31:36 awplus MSTP[1417]: Bridge id  : 8000:0000cd1000fe
17:31:36 awplus MSTP[1417]: Port id      : 8001 (128:1)
17:31:36 awplus MSTP[1417]: msg age: 0 max age: 20 hellotime: 2 fwd delay: 15
17:31:36 awplus MSTP[1417]: port1.0.4 xSTP BPDU rx - finish
```

In RSTP mode receiving an RSTP BPDU:

```
awplus#terminal monitor
awplus#debug mstp packet rx decode interface port1.0.4
awplus#17:30:17 awplus MSTP[1417]: port1.0.4 xSTP BPDU rx - start
17:30:17 awplus MSTP[1417]: Protocol version: RSTP, BPDU type: RST
17:30:17 awplus MSTP[1417]: CIST Flags:  Forward Learn role=Desig
17:30:17 awplus MSTP[1417]: CIST root id      : 8000:0000cd1000fe
17:30:17 awplus MSTP[1417]: CIST ext pathcost : 0
17:30:17 awplus MSTP[1417]: CIST reg root id  : 8000:0000cd1000fe
17:30:17 awplus MSTP[1417]: CIST port id      : 8001 (128:1)
17:30:17 awplus MSTP[1417]: msg age: 0 max age: 20 hellotime: 2 fwd delay: 15
17:30:17 awplus MSTP[1417]: port1.0.4 xSTP BPDU rx - finish
```

**Examples**

```
awplus# debug mstp all
awplus# debug mstp cli
awplus# debug mstp packet rx
awplus# debug mstp protocol detail
awplus# debug mstp timer
awplus# debug mstp packet rx decode interface port1.0.2
awplus# debug mstp packet tx decode interface port1.0.6
```

**Related commands**

log buffered (filter)

show debugging mstp

terminal monitor

undebug mstp

# instance priority (MSTP)

**Overview** Use this command to set the priority for this device to become the root bridge for the specified MSTI (Multiple Spanning Tree Instance).

Use this command for MSTP only.

Use the **no** variant of this command to restore the root bridge priority of the device for the instance to the default.

**Syntax**

```
instance <instance-id> priority <priority>
no instance <instance-id> priority
```

| Parameter | Description |
|---|---|
| *<instance-id>* | Specify an MSTP instance in the range 1-5. |
| *<priority>* | Specify the root bridge priority for the device for the MSTI in the range `<0-61440>`. Note that a lower priority number indicates a greater likelihood of the device becoming the root bridge. The priority values can be set only in increments of 4096. If you specify a number that is not a multiple of 4096, it will be rounded down. The default priority is 32768. |

**Default** The default priority value for all instances is 32768.

**Mode** MST Configuration

**Usage notes** MSTP lets you distribute traffic more efficiently across a network by blocking different links for different VLANs. You do this by making different devices into the root bridge for each MSTP instance, so that each instance blocks a different link.

If all devices have the same root bridge priority for the instance, MSTP selects the device with the lowest MAC address to be the root bridge. Give the device a higher priority for becoming the root bridge for a particular instance by assigning it a lower priority number, or vice versa.

**Examples** To set the root bridge priority for MSTP instance 2 to be the highest (0), so that it will be the root bridge for this instance when available, use the commands:

```
awplus# configure terminal
awplus(config)# spanning-tree mst configuration
awplus(config-mst)# instance 2 priority 0
```

To reset the root bridge priority for instance 2 to the default (32768), use the commands:

```
awplus# configure terminal
awplus(config)# spanning-tree mst configuration
awplus(config-mst)# no instance 2 priority
```

**Related commands**

region (MSTP)

revision (MSTP)

show spanning-tree mst config

spanning-tree mst instance

spanning-tree mst instance priority

# instance vlan (MSTP)

## Overview

Use this command to create an MST Instance (MSTI), and associate the specified VLANs with it. An MSTI is a spanning tree instance that exists within an MST region (MSTR).

When a VLAN is associated with an MSTI the member ports of the VLAN are automatically configured to send and receive spanning-tree information for the associated MSTI. You can disable this automatic configuration of member ports of the VLAN to the associated MSTI by using a **no spanning-tree mst instance** command to remove the member port from the MSTI.

Use the **instance vlan** command for MSTP only.

Use the **no** variant of this command to remove the specified VLANs from the MSTI.

## Syntax

```
instance <instance-id> vlan <vid-list>
no instance <instance-id> vlan <vid-list>
```

| Parameter | Description |
|---|---|
| *<instance-id>* | Specify an MSTP instance in the range 1-5. |
| *<vid-list>* | Specify one or more VLAN identifiers (VID) to be associated with the MSTI specified. This can be a single VID in the range 1-4094, or a hyphen-separated range or a comma-separated list of VLAN IDs. |

## Mode

MST Configuration

## Usage notes

The VLANs must be created before being associated with an MST instance (MSTI). If the VLAN range is not specified, the MSTI will not be created.

This command removes the specified VLANs from the CIST and adds them to the specified MSTI. If you use the **no** variant of this command to remove the VLAN from the MSTI, it returns it to the CIST. To move a VLAN from one MSTI to another, you must first use the **no** variant of this command to return it to the CIST.

Ports in these VLANs will remain in the control of the CIST until you associate the ports with the MSTI using the spanning-tree mst instance command.

## Example

To associate VLAN 30 with MSTI 2, use the commands:

```
awplus# configure terminal
awplus(config)# spanning-tree mode mstp
awplus(config)# spanning-tree mst configuration
awplus(config-mst)# instance 2 vlan 30
```

**Related commands**

region (MSTP)

revision (MSTP)

show spanning-tree mst config

spanning-tree mst instance

vlan

# region (MSTP)

**Overview** Use this command to assign a name to the device's MST Region. MST Instances (MSTI) of a region form different spanning trees for different VLANs.

Use this command for MSTP only.

Use the **no** variant of this command to remove this region name and reset it to the default.

**Syntax**

```
region <region-name>
no region
```

| Parameter | Description |
|---|---|
| *<region-name>* | Specify the name of the region, up to 32 characters. Valid characters are upper-case, lower-case, digits, underscore. |

**Default** By default, the region name is My Name.

**Mode** MST Configuration

**Usage** The region name, the revision number, and the digest of the VLAN to MSTI configuration table must be the same on all devices that are intended to be in the same MST region.

**Example**

```
awplus# configure terminal
awplus(config)# spanning-tree mst configuration
awplus(config-mst)# region ATL
```

**Related commands** revision (MSTP)

show spanning-tree mst config

# revision (MSTP)

**Overview** Use this command to specify the MST revision number to be used in the configuration identifier.

Use this command for MSTP only.

**Syntax**

```
revision <revision-number>
```

| Parameter | Description |
|---|---|
| *<revision-number>* | <0-65535> Revision number. |

**Default** The default of revision number is 0.

**Mode** MST Configuration

**Usage** The region name, the revision number, and the digest of the VLAN to MSTI configuration table must be the same on all devices that are intended to be in the same MST region.

**Example**

```
awplus# configure terminal
awplus(config)# spanning-tree mst configuration
awplus(config-mst)# revision 25
```

**Related commands**

region (MSTP)

show spanning-tree mst config

instance vlan (MSTP)

# show debugging mstp

**Overview** Use this command to see what debugging is turned on for MSTP.

For information on filtering and saving command output, see the "Getting Started with AlliedWare Plus" Feature Overview and Configuration Guide.

**Syntax**

```
show debugging mstp
```

**Mode** User Exec and Privileged Exec

**Example** To display the MSTP debugging options set, enter the command:

```
awplus# show debugging mstp
```

**Output** Figure 18-1: Example output from **show debugging mstp**

```
MSTP debugging status:
  MSTP receiving packet debugging is on
```

**Related commands** debug mstp (RSTP and STP)

# show spanning-tree

**Overview** Use this command to display detailed spanning tree information on the specified port or on all ports. Use this command for RSTP, MSTP or STP.

For information on filtering and saving command output, see the "Getting Started with AlliedWare Plus" Feature Overview and Configuration Guide.

**Syntax**

```
show spanning-tree [interface <port-list>]
```

| Parameter | Description |
|---|---|
| `interface` | Display information about the following port only. |
| `<port-list>` | The ports to display information about. A port-list can be:<br>• a switch port (e.g. port1.0.6) a static channel group (e.g. sa2) or a dynamic (LACP) channel group (e.g. po2)<br>• a continuous range of ports separated by a hyphen, e.g. port1.0.1-1.0.4, or sa1-2, or po1-2<br>• a comma-separated list of ports and port ranges, e.g. port1.0.1,port1.0.4-1.0.6. Do not mix switch ports, static channel groups, and dynamic (LACP) channel groups in the same list |

**Mode** User Exec and Privileged Exec

**Usage notes** Note that any list of interfaces specified must not span any interfaces that are not installed.

A topology change counter has been included for RSTP and MSTP. You can see the topology change counter for RSTP by using the **show spanning-tree** command. You can see the topology change counter for MSTP by using the **show spanning-tree mst instance** command.

**Example** To display spanning tree information about port1.0.3, use the command:

```
awplus# show spanning-tree interface port1.0.3
```

**Output** Figure 18-2: Example output from **show spanning-tree** in RSTP mode

```
awplus#show spanning-tree
% 1: Bridge up - Spanning Tree Enabled
% 1: Root Path Cost 0 - Root Port 0 -  Bridge Priority 32768
% 1: Forward Delay 15 - Hello Time 2 - Max Age 20
% 1: Root Id 80000000cd24ff2d
% 1: Bridge Id 80000000cd24ff2d
% 1: last topology change Mon Oct 3 02:06:26 2016
% 1: portfast bpdu-filter disabled
% 1: portfast bpdu-guard disabled
% 1: portfast errdisable timeout disabled
% 1: portfast errdisable timeout interval 300 sec
%   port1.0.1: Port 5001 - Id 8389 - Role Disabled - State Discarding
%   port1.0.1: Designated Path Cost 0
%   port1.0.1: Configured Path Cost 20000000  - Add type Explicit ref count 1
%   port1.0.1: Designated Port Id 8389 - Priority 128  -
%   port1.0.1: Root 80000000cd24ff2d
%   port1.0.1: Designated Bridge 80000000cd24ff2d
%   port1.0.1: Message Age 0 - Max Age 20
%   port1.0.1: Hello Time 2 - Forward Delay 15
%   port1.0.1: Forward Timer 0 - Msg Age Timer 0 - Hello Timer 0 - topo change
timer 0
%   port1.0.1: forward-transitions 0
%   port1.0.1: Version Rapid Spanning Tree Protocol - Received None - Send STP
%   port1.0.1: No portfast configured - Current  portfast off
%   port1.0.1: portfast bpdu-guard  default  - Current portfast bpdu-guard off
%   port1.0.1: portfast bpdu-filter default  - Current portfast bpdu-filter off
%   port1.0.1: no root guard configured     - Current root guard off
%   port1.0.1: Configured Link Type point-to-point - Current  shared
%
%   port1.0.2: Port 5002 - Id 838a - Role Disabled - State Discarding
%   port1.0.2: Designated Path Cost 0
%   port1.0.2: Configured Path Cost 20000000  - Add type Explicit ref count 1
%   port1.0.2: Designated Port Id 838a - Priority 128  -
%   port1.0.2: Root 80000000cd24ff2d
%   port1.0.2: Designated Bridge 80000000cd24ff2d
%   port1.0.2: Message Age 0 - Max Age 20
%   port1.0.2: Hello Time 2 - Forward Delay 15
%   port1.0.2: Forward Timer 0 - Msg Age Timer 0 - Hello Timer 0 - topo change
timer 0
%   port1.0.2: forward-transitions 0
%   port1.0.2: Version Rapid Spanning Tree Protocol - Received None - Send STP
%   port1.0.2: No portfast configured - Current  portfast off
%   port1.0.2: portfast bpdu-guard  default  - Current portfast bpdu-guard off
%   port1.0.2: portfast bpdu-filter default  - Current portfast bpdu-filter off
%   port1.0.2: no root guard configured     - Current root guard off
%   port1.0.2: Configured Link Type point-to-point - Current  shared
```

**Output** Figure 18-3: Example output from **show spanning-tree**

```
% 1: Bridge up - Spanning Tree Enabled
% 1: Root Path Cost 0 - Root Port 0 -  Bridge Priority 32768
% 1: Forward Delay 15 - Hello Time 2 - Max Age 20
% 1: Root Id 80000000cd20f093
% 1: Bridge Id 80000000cd20f093
% 1: last topology change Mon Oct 3 02:06:26 2016
% 1: portfast bpdu-filter disabled
% 1: portfast bpdu-guard disabled
% 1: portfast errdisable timeout disabled
% 1: portfast errdisable timeout interval 300 sec
%   port1.0.3: Port 5023 - Id 839f - Role Designated - State Forwarding
%   port1.0.3: Designated Path Cost 0
%   port1.0.3: Configured Path Cost 200000  - Add type Explicit ref count 1
%   port1.0.3: Designated Port Id 839f - Priority 128  -
%   port1.0.3: Root 80000000cd20f093
%   port1.0.3: Designated Bridge 80000000cd20f093
%   port1.0.3: Message Age 0 - Max Age 20
%   port1.0.3: Hello Time 2 - Forward Delay 15
%   port1.0.3: Forward Timer 0 - Msg Age Timer 0 - Hello Timer 1 - topo change
timer 0
%   port1.0.3: forward-transitions 32
%   port1.0.3: Version Rapid Spanning Tree Protocol - Received None - Send RSTP
%   port1.0.3: No portfast configured - Current  portfast off
%   port1.0.3: portfast bpdu-guard  default  - Current portfast bpdu-guard off
%   port1.0.3: portfast bpdu-filter default  - Current portfast bpdu-filter off
%   port1.0.3: no root guard configured     - Current root guard off
%   port1.0.3: Configured Link Type point-to-point - Current point-to-point
...
```

# show spanning-tree brief

**Overview** Use this command to display a summary of spanning tree status information on all ports. Use this command for RSTP, MSTP or STP.

**Syntax**

```
show spanning-tree brief
```

| Parameter | Description |
|---|---|
| `brief` | A brief summary of spanning tree information. |

**Mode** User Exec and Privileged Exec

**Usage notes** Note that any list of interfaces specified must not span any interfaces that are not installed.

A topology change counter has been included for RSTP and MSTP. You can see the topology change counter for RSTP by using the **show spanning-tree** command. You can see the topology change counter for MSTP by using the **show spanning-tree mst instance** command.

**Example** To display a summary of spanning tree status information, use the command:

```
awplus# show spanning-tree brief
```

**Output** Figure 18-4: Example output from **show spanning-tree brief**

```
Default: Bridge up - Spanning Tree Enabled
Default: Root Path Cost 40000 - Root Port 4501 -  Bridge Priority 32768
Default: Root Id 8000:0000cd250001
Default: Bridge Id 8000:0000cd296eb1

Port            Designated Bridge    Port Id    Role          State
sa1             8000:001577c9744b    8195       Rootport      Forwarding
po1             8000:0000cd296eb1    81f9       Designated    Forwarding
port1.0.1       8000:0000cd296eb1    8389       Disabled      Discarding
port1.0.2       8000:0000cd296eb1    838a       Disabled      Discarding
port1.0.3       8000:0000cd296eb1    838b       Disabled      Discarding
...
```

**Related commands** show spanning-tree

# show spanning-tree mst

**Overview** This command displays bridge-level information about the CIST and VLAN to MSTI mappings.

For information on filtering and saving command output, see the "Getting Started with AlliedWare Plus" Feature Overview and Configuration Guide.

**Syntax**

```
show spanning-tree mst
```

**Mode** User Exec, Privileged Exec and Interface Configuration

**Example** To display bridge-level information about the CIST and VLAN to MSTI mappings, enter the command:

```
awplus# show spanning-tree mst
```

**Output** Figure 18-5: Example output from **show spanning-tree mst**

```
% 1: Bridge up - Spanning Tree Enabled
% 1: CIST Root Path Cost 0 - CIST Root Port 0 - CIST Bridge
Priority 32768
% 1: Forward Delay 15 - Hello Time 2 - Max Age 20 - Max-hops 20
% 1: CIST Root Id 8000000475e93ffe
% 1: CIST Reg Root Id 8000000475e93ffe
% 1: CST Bridge Id 8000000475e93ffe
% 1: portfast bpdu-filter disabled
% 1: portfast bpdu-guard disabled
% 1: portfast errdisable timeout disabled
% 1: portfast errdisable timeout interval 300 sec
%
%   Instance        VLAN
%   0:              1
%   2:              4
```

**Related commands** show spanning-tree mst interface

# show spanning-tree mst config

**Overview** Use this command to display MSTP configuration identifier for the device.

**Syntax**

```
show spanning-tree mst config
```

**Mode** User Exec, Privileged Exec and Interface Configuration

**Usage notes** The region name, the revision number, and the digest of the VLAN to MSTI configuration table must be the same on all devices that are intended to be in the same MST region.

**Example** To display MSTP configuration identifier information, enter the command:

```
awplus# show spanning-tree mst config
```

**Output** Figure 18-6: Example output from **show spanning-tree mst config**

```
awplus#show spanning-tree mst config
%
%  MSTP Configuration Information:
%-------------------------------------------------------
%  Format Id      : 0
%  Name           : My Name
%  Revision Level : 0
%  Digest         : 0x80DEE46DA92A98CF21C603291B22880A
%-------------------------------------------------------
```

**Related commands**

instance vlan (MSTP)

region (MSTP)

revision (MSTP)

# show spanning-tree mst detail

**Overview** This command displays detailed information about each instance, and all interfaces associated with that particular instance.

For information on filtering and saving command output, see the "Getting Started with AlliedWare Plus" Feature Overview and Configuration Guide.

**Syntax** `show spanning-tree mst detail`

**Mode** User Exec, Privileged Exec and Interface Configuration

**Example** To display detailed information about each instance, and all interfaces associated with them, enter the command:

```
awplus# show spanning-tree mst detail
```

**Output** Figure 18-7: Example output from **show spanning-tree mst detail**

```
% 1: Bridge up - Spanning Tree Enabled
% 1: CIST Root Path Cost 0 - CIST Root Port 0 -  CIST Bridge Priority 32768
% 1: Forward Delay 15 - Hello Time 2 - Max Age 20 - Max-hops 20
% 1: CIST Root Id 80000000cd24ff2d
% 1: CIST Reg Root Id 80000000cd24ff2d
% 1: CIST Bridge Id 80000000cd24ff2d
% 1: portfast bpdu-filter disabled
% 1: portfast bpdu-guard disabled
% 1: portfast errdisable timeout disabled
% 1: portfast errdisable timeout interval 300 sec
%   port1.0.1: Port 5001 - Id 8389 - Role Disabled - State Discarding
%   port1.0.1: Designated External Path Cost 0 -Internal Path Cost 0
%   port1.0.1: Configured Path Cost 20000000  - Add type Explicit ref count 1
%   port1.0.1: Designated Port Id 8389 - CIST Priority 128  -
%   port1.0.1: CIST Root 80000000cd24ff2d
%   port1.0.1: Regional Root 80000000cd24ff2d
%   port1.0.1: Designated Bridge 80000000cd24ff2d
%   port1.0.1: Message Age 0 - Max Age 20
%   port1.0.1: CIST Hello Time 2 - Forward Delay 15
%   port1.0.1: CIST Forward Timer 0 - Msg Age Timer 0 - Hello Timer 0 - topo
change timer 0
...
%   port1.0.2: forward-transitions 0
%   port1.0.2: Version Multiple Spanning Tree Protocol - Received None - Send STP
%   port1.0.2: No portfast configured - Current  portfast off
%   port1.0.2: portfast bpdu-guard  default  - Current portfast bpdu-guard off
%   port1.0.2: portfast bpdu-filter default  - Current portfast bpdu-filter off
%   port1.0.2: no root guard configured     - Current root guard off
%   port1.0.2: Configured Link Type point-to-point - Current  shared
%
```

```
%   port1.0.3: Port 5003 - Id 838b - Role Disabled - State Discarding
%   port1.0.3: Designated External Path Cost 0 -Internal Path Cost 0
%   port1.0.3: Configured Path Cost 20000000  - Add type Explicit ref count 1
%   port1.0.3: Designated Port Id 838b - CIST Priority 128  -
%   port1.0.3: CIST Root 80000000cd24ff2d
%   port1.0.3: Regional Root 80000000cd24ff2d
%   port1.0.3: Designated Bridge 80000000cd24ff2d
%   port1.0.3: Message Age 0 - Max Age 20
%   port1.0.3: CIST Hello Time 2 - Forward Delay 15
%   port1.0.3: CIST Forward Timer 0 - Msg Age Timer 0 - Hello Timer 0 - topo
change timer 0
%   port1.0.3: forward-transitions 0
%   port1.0.3: Version Multiple Spanning Tree Protocol - Received None - Send STP
%   port1.0.3: No portfast configured - Current  portfast off
%   port1.0.3: portfast bpdu-guard  default  - Current portfast bpdu-guard off
%   port1.0.3: portfast bpdu-filter default  - Current portfast bpdu-filter off
%   port1.0.3: no root guard configured     - Current root guard off
%   port1.0.3: Configured Link Type point-to-point - Current  shared
```

# show spanning-tree mst detail interface

**Overview** This command displays detailed information about the specified switch port, and the MST instances associated with it.

For information on filtering and saving command output, see the "Getting Started with AlliedWare Plus" Feature Overview and Configuration Guide.

**Syntax** `show spanning-tree mst detail interface <port>`

| Parameter | Description |
|---|---|
| *<port>* | The port to display information about. The port may be a switch port (e.g. `port1.0.4`), a static channel group (e.g. `sa2`), or a dynamic (LACP) channel group (e.g. `po2`). |

**Mode** User Exec, Privileged Exec and Interface Configuration

**Example** To display detailed information about port1.0.3 and the instances associated with it, enter the command:

```
awplus# show spanning-tree mst detail interface port1.0.3
```

**Output** Figure 18-8: Example output from **show spanning-tree mst detail interface**

```
% 1: Bridge up - Spanning Tree Enabled
% 1: CIST Root Path Cost 0 - CIST Root Port 0 -  CIST Bridge Priority 32768
% 1: Forward Delay 15 - Hello Time 2 - Max Age 20 - Max-hops 20
% 1: CIST Root Id 80000000cd24ff2d
% 1: CIST Reg Root Id 80000000cd24ff2d
% 1: CIST Bridge Id 80000000cd24ff2d
% 1: portfast bpdu-filter disabled
% 1: portfast bpdu-guard disabled
% 1: portfast errdisable timeout disabled
% 1: portfast errdisable timeout interval 300 sec
%   port1.0.2: Port 5002 - Id 838a - Role Disabled - State Discarding
%   port1.0.2: Designated External Path Cost 0 -Internal Path Cost 0
%   port1.0.2: Configured Path Cost 20000000  - Add type Explicit ref count 2
%   port1.0.2: Designated Port Id 838a - CIST Priority 128  -
%   port1.0.2: CIST Root 80000000cd24ff2d
%   port1.0.2: Regional Root 80000000cd24ff2d
%   port1.0.2: Designated Bridge 80000000cd24ff2d
%   port1.0.2: Message Age 0 - Max Age 20
%   port1.0.2: CIST Hello Time 2 - Forward Delay 15
%   port1.0.2: CIST Forward Timer 0 - Msg Age Timer 0 - Hello Timer 0 - topo
change timer 0
%   port1.0.2: forward-transitions 0
%   port1.0.2: Version Multiple Spanning Tree Protocol - Received None - Send STP
```

```
%   port1.0.2: No portfast configured - Current  portfast off
%   port1.0.2: portfast bpdu-guard  default  - Current portfast bpdu-guard off
%   port1.0.2: portfast bpdu-filter default  - Current portfast bpdu-filter off
%   port1.0.2: no root guard configured     - Current root guard off
%   port1.0.2: Configured Link Type point-to-point - Current  shared
%
% Instance  2:  Vlans: 2
% 1: MSTI Root Path Cost 0 -MSTI Root Port 0 - MSTI Bridge Priority 32768
% 1: MSTI Root Id 80020000cd24ff2d
% 1: MSTI Bridge Id 80020000cd24ff2d
%   port1.0.2: Port 5002 - Id 838a - Role Disabled - State Discarding
%   port1.0.2: Designated Internal Path Cost 0  - Designated Port Id 838a
%   port1.0.2: Configured Internal Path Cost 20000000
%   port1.0.2: Configured CST External Path cost 20000000
%   port1.0.2: CST Priority 128  - MSTI Priority 128
%   port1.0.2: Designated Root 80020000cd24ff2d
%   port1.0.2: Designated Bridge 80020000cd24ff2d
%   port1.0.2: Message Age 0 - Max Age 0
%   port1.0.2: Hello Time 2 - Forward Delay 15
%   port1.0.2: Forward Timer 0 - Msg Age Timer 0 - Hello Timer 0
```

# show spanning-tree mst instance

**Overview** This command displays detailed information for the specified instance, and all switch ports associated with that instance.

A topology change counter has been included for RSTP and MSTP. You can see the topology change counter for RSTP by using the show spanning-tree command. You can see the topology change counter for MSTP by using the **show spanning-tree mst instance** command.

For information on filtering and saving command output, see the "Getting Started with AlliedWare Plus" Feature Overview and Configuration Guide.

**Syntax**

```
show spanning-tree mst instance <instance-id>
```

| Parameter | Description |
|---|---|
| *<instance-id>* | Specify an MSTP instance in the range 1-5. |

**Mode** User Exec, Privileged Exec, and Interface Configuration

**Example** To display detailed information for **instance 2**, and all switch ports associated with that instance, use the command:

```
awplus# show spanning-tree mst instance 2
```

**Output** Figure 18-9: Example output from **show spanning-tree mst instance**

```
% 1: MSTI Root Path Cost 0 - MSTI Root Port 0 - MSTI Bridge Priority 32768
% 1: MSTI Root Id 80020000cd24ff2d
% 1: MSTI Bridge Id 80020000cd24ff2d
%   port1.0.2: Port 5002 - Id 838a - Role Disabled - State Discarding
%   port1.0.2: Designated Internal Path Cost 0  - Designated Port Id 838a
%   port1.0.2: Configured Internal Path Cost 20000000
%   port1.0.2: Configured CST External Path cost 20000000
%   port1.0.2: CST Priority 128  - MSTI Priority 128
%   port1.0.2: Designated Root 80020000cd24ff2d
%   port1.0.2: Designated Bridge 80020000cd24ff2d
%   port1.0.2: Message Age 0 - Max Age 0
%   port1.0.2: Hello Time 2 - Forward Delay 15
%   port1.0.2: Forward Timer 0 - Msg Age Timer 0 - Hello Timer 0
%
```

# show spanning-tree mst instance interface

**Overview** This command displays detailed information for the specified MST (Multiple Spanning Tree) instance, and the specified switch port associated with that MST instance.

For information on filtering and saving command output, see the "Getting Started with AlliedWare Plus" Feature Overview and Configuration Guide.

**Syntax**

```
show spanning-tree mst instance <instance-id> interface <port>
```

| Parameter | Description |
|---|---|
| *<instance-id>* | Specify an MSTP instance in the range 1-5. |
| *<port>* | The port to display information about. The port may be a switch port (e.g. port1.0.4), a static channel group (e.g. sa2), or a dynamic (LACP) channel group (e.g. po2). |

**Mode** User Exec, Privileged Exec, and Interface Configuration

**Example** To display detailed information for instance 2, interface port1.0.2, use the command:

```
awplus# show spanning-tree mst instance 2 interface port1.0.2
```

**Output** Figure 18-10: Example output from **show spanning-tree mst instance**

```
% 1: MSTI Root Path Cost 0 - MSTI Root Port 0 - MSTI Bridge Priority 32768
% 1: MSTI Root Id 80020000cd24ff2d
% 1: MSTI Bridge Id 80020000cd24ff2d
%   port1.0.2: Port 5002 - Id 838a - Role Disabled - State Discarding
%   port1.0.2: Designated Internal Path Cost 0  - Designated Port Id 838a
%   port1.0.2: Configured Internal Path Cost 20000000
%   port1.0.2: Configured CST External Path cost 20000000
%   port1.0.2: CST Priority 128  - MSTI Priority 128
%   port1.0.2: Designated Root 80020000cd24ff2d
%   port1.0.2: Designated Bridge 80020000cd24ff2d
%   port1.0.2: Message Age 0 - Max Age 0
%   port1.0.2: Hello Time 2 - Forward Delay 15
%   port1.0.2: Forward Timer 0 - Msg Age Timer 0 - Hello Timer 0
%
```

# show spanning-tree mst interface

**Overview** This command displays the number of instances created, and VLANs associated with it for the specified switch port.

For information on filtering and saving command output, see the "Getting Started with AlliedWare Plus" Feature Overview and Configuration Guide.

**Syntax** `show spanning-tree mst interface <port>`

| Parameter | Description |
|---|---|
| *<port>* | The port to display information about. The port may be a switch port (e.g. `port1.0.4`), a static channel group (e.g. `sa2`), or a dynamic (LACP) channel group (e.g. `po2`). |

**Mode** User Exec, Privileged Exec, and Interface Configuration

**Example** To display detailed information about each instance, and all interfaces associated with them, for port1.0.4, use the command:

```
awplus# show spanning-tree mst interface port1.0.4
```

**Output** Figure 18-11: Example output from **show spanning-tree mst interface**

```
% 1: Bridge up - Spanning Tree Enabled
% 1: CIST Root Path Cost 0 - CIST Root Port 0 - CIST Bridge Priority 32768
% 1: Forward Delay 15 - Hello Time 2 - Max Age 20 - Max-hops 20
% 1: CIST Root Id 80000008c73a2b22
% 1: CIST Reg Root Id 80000008c73a2b22
% 1: CST Bridge Id 80000008c73a2b22
% 1: portfast bpdu-filter disabled
% 1: portfast bpdu-guard disabled
% 1: portfast errdisable timeout disabled
% 1: portfast errdisable timeout interval 1 sec
%
%   Instance        VLAN
%   0:              1
%   1:              2-3
%   2:              4-5
```

# show spanning-tree statistics

**Overview** This command displays BPDU (Bridge Protocol Data Unit) statistics for all spanning-tree instances, and all switch ports associated with all spanning-tree instances.

For information on filtering and saving command output, see the "Getting Started with AlliedWare Plus" Feature Overview and Configuration Guide.

**Syntax** `show spanning-tree statistics`

**Mode** Privileged Exec

**Usage notes** To display BPDU statistics for all spanning-tree instances, and all switch ports associated with all spanning-tree instances, use the command:

```
awplus# show spanning-tree statistics
```

**Output** Figure 18-12: Example output from **show spanning-tree statistics**

```
                 ================================
% BPDU Related Parameters
% ------------------------
% Port Spanning Tree                 : Disable
% Spanning Tree Type                 : Rapid Spanning Tree Protocol
% Current Port State                 : Discarding
% Port ID                            : 8393
% Port Number                        : 393
% Path Cost                          : 20000000
% Message Age                        : 0
% Designated Root                    : ec:cd:6d:20:c0:ed
% Designated Cost                    : 0
% Designated Bridge                  : ec:cd:6d:20:c0:ed
% Designated Port Id                 : 8393
% Top Change Ack                     : FALSE
% Config Pending                     : FALSE
% PORT Based Information & Statistics
% -----------------------------------
% Config Bpdu's xmitted              : 0
% Config Bpdu's received             : 0
% TCN Bpdu's xmitted                 : 0
% TCN Bpdu's received                : 0
% Forward Trans Count                : 0
```

```
% STATUS of Port Timers
% ---------------------
% Hello Time Configured              : 2
% Hello timer                        : INACTIVE
% Hello Time Value                   : 0
% Forward Delay Timer                : INACTIVE
% Forward Delay Timer Value          : 0
% Message Age Timer                  : INACTIVE
% Message Age Timer Value            : 0
% Topology Change Timer              : INACTIVE
% Topology Change Timer Value        : 0
% Hold Timer                         : INACTIVE
% Hold Timer Value                   : 0
% Other Port-Specific Info
  ------------------------
% Max Age Transitions                : 1
% Msg Age Expiry                     : 0
% Similar BPDUS Rcvd                 : 0
% Src Mac Count                      : 0
% Total Src Mac Rcvd                 : 0
% Next State                         : Learning
% Topology Change Time               : 0
```

# show spanning-tree statistics instance

**Overview** This command displays BPDU (Bridge Protocol Data Unit) statistics for the specified MST (Multiple Spanning Tree) instance, and all switch ports associated with that MST instance.

For information on filtering and saving command output, see the "Getting Started with AlliedWare Plus" Feature Overview and Configuration Guide.

**Syntax**

```
show spanning-tree statistics instance <instance-id>
```

| Parameter | Description |
|---|---|
| *<instance-id>* | Specify an MSTP instance in the range 1-5. |

**Mode** Privileged Exec

**Example** To display BPDU statistics information for MST instance 2, and all switch ports associated with that MST instance, use the command:

```
awplus# show spanning-tree statistics instance 2
```

**Output** Figure 18-13: Example output from **show spanning-tree statistics instance**

```
% % INST_PORT port1.0.3 Information & Statistics
% ----------------------------------------
% Config Bpdu's xmitted (port/inst)    : (0/0)
% Config Bpdu's received (port/inst)   : (0/0)
% TCN Bpdu's xmitted (port/inst)       : (0/0)
% TCN Bpdu's received (port/inst)      : (0/0)
% Message Age(port/Inst)               : (0/0)
% port1.0.3: Forward Transitions                  : 0
% Next State                           : Learning
% Topology Change Time                 : 0
...
```

**Related commands** show spanning-tree statistics

# show spanning-tree statistics instance interface

**Overview** This command displays BPDU (Bridge Protocol Data Unit) statistics for the specified MST (Multiple Spanning Tree) instance and the specified switch port associated with that MST instance.

For information on filtering and saving command output, see the "Getting Started with AlliedWare Plus" Feature Overview and Configuration Guide.

**Syntax**

```
show spanning-tree statistics instance <instance-id> interface
<port>
```

| Parameter | Description |
|---|---|
| *<instance-id>* | Specify an MSTP instance in the range 1-5. |
| *<port>* | The port to display information about. The port may be a switch port (e.g. port1.0.4), a static channel group (e.g. sa2), or a dynamic (LACP) channel group (e.g. po2). |

**Mode** Privileged Exec

**Example** To display BPDU statistics for MST instance 2, interface port1.0.2, use the command:

```
awplus# show spanning-tree statistics instance 2 interface
port1.0.2
```

**Output** Figure 18-14: Example output from **show spanning-tree statistics instance interface**

```
awplus#sh spanning-tree statistics interface port1.0.2 instance 1
        Spanning Tree Enabled for Instance : 1
        ==================================
% INST_PORT port1.0.2 Information & Statistics
% ----------------------------------------
% Config Bpdu's xmitted (port/inst)    : (0/0)
% Config Bpdu's received (port/inst)   : (0/0)
% TCN Bpdu's xmitted (port/inst)       : (0/0)
% TCN Bpdu's received (port/inst)      : (0/0)
% Message Age(port/Inst)               : (0/0)
% port1.0.2: Forward Transitions       : 0
% Next State                           : Learning
% Topology Change Time                 : 0

% Other Inst/Vlan Information & Statistics
% ----------------------------------------
% Bridge Priority                     : 0
% Bridge Mac Address                  : ec:cd:6d:20:c0:ed
% Topology Change Initiator           : 5023
% Last Topology Change Occured        : Mon Oct 3 05:42:06 2016
% Topology Change                     : FALSE
% Topology Change Detected            : FALSE
% Topology Change Count               : 1
% Topology Change Last Recvd from     : 00:00:00:00:00:00
```

**Related commands** show spanning-tree statistics

# show spanning-tree statistics interface

**Overview** This command displays BPDU (Bridge Protocol Data Unit) statistics for the specified switch port, and all MST instances associated with that switch port.

For information on filtering and saving command output, see the "Getting Started with AlliedWare Plus" Feature Overview and Configuration Guide.

**Syntax**

```
show spanning-tree statistics interface <port>
```

| Parameter | Description |
|---|---|
| *<port>* | The port to display information about. The port may be a switch port (e.g. port1.0.2), a static channel group (e.g. sa2), or a dynamic (LACP) channel group (e.g. po2). |

**Mode** Privileged Exec

**Example** To display BPDU statistics about each MST instance for port1.0.2, use the command:

```
awplus# show spanning-tree statistics interface port1.0.2
```

**Output** Figure 18-15: Example output from **show spanning-tree statistics interface**

```
awplus#show spanning-tree statistics interface port1.0.2

               Port number = 906 Interface = port1.0.2
                  ================================
% BPDU Related Parameters
% ------------------------
% Port Spanning Tree                 : Disable
% Spanning Tree Type                 : Multiple Spanning Tree Protocol
% Current Port State                 : Discarding
% Port ID                            : 838a
% Port Number                        : 38a
% Path Cost                          : 20000000
% Message Age                        : 0
% Designated Root                    : ec:cd:6d:20:c0:ed
% Designated Cost                    : 0
% Designated Bridge                  : ec:cd:6d:20:c0:ed
% Designated Port Id                 : 838a
% Top Change Ack                     : FALSE
% Config Pending                     : FALSE
```

```
% PORT Based Information & Statistics
% -----------------------------------
% Config Bpdu's xmitted              : 0
% Config Bpdu's received             : 0
% TCN Bpdu's xmitted                 : 0
% TCN Bpdu's received                : 0
% Forward Trans Count                : 0

% STATUS of Port Timers
% ---------------------
% Hello Time Configured              : 2
% Hello timer                        : INACTIVE
% Hello Time Value                   : 0
% Forward Delay Timer                : INACTIVE
% Forward Delay Timer Value          : 0
% Message Age Timer                  : INACTIVE
% Message Age Timer Value            : 0
% Topology Change Timer              : INACTIVE
% Topology Change Timer Value        : 0
% Hold Timer                         : INACTIVE
% Hold Timer Value                   : 0

% Other Port-Specific Info
  ------------------------
% Max Age Transitions                : 1
% Msg Age Expiry                     : 0
% Similar BPDUS Rcvd                 : 0
% Src Mac Count                      : 0
% Total Src Mac Rcvd                 : 0
% Next State                         : Learning
% Topology Change Time               : 0
% Other Bridge information & Statistics
  -------------------------------------
% STP Multicast Address              : 01:80:c2:00:00:00
% Bridge Priority                    : 32768
% Bridge Mac Address                 : ec:cd:6d:20:c0:ed
% Bridge Hello Time                  : 2
% Bridge Forward Delay               : 15
% Topology Change Initiator          : 5023
% Last Topology Change Occured       : Mon Oct 3 05:41:20 2016
% Topology Change                    : FALSE
% Topology Change Detected           : TRUE
% Topology Change Count              : 1
% Topology Change Last Recvd from    : 00:00:00:00:00:00
```

**Related commands** show spanning-tree statistics

# show spanning-tree vlan range-index

**Overview** Use this command to display information about MST (Multiple Spanning Tree) instances and the VLANs associated with them including the VLAN range-index value for the device.

**Syntax**

```
show spanning-tree vlan range-index
```

**Mode** Privileged Exec

**Example** To display information about MST instances and the VLANs associated with them for the device, including the VLAN range-index value, use the following command:

```
awplus# show spanning-tree vlan range-index
```

**Output** Figure 18-16: Example output from **show spanning-tree vlan range-index**

```
awplus#show spanning-tree vlan range-index
% MST Instance  VLAN       RangeIdx
%      1        1          1%
```

**Related commands** show spanning-tree statistics

# spanning-tree autoedge (RSTP and MSTP)

**Overview**

Use this command to enable the autoedge feature on the port.

The autoedge feature allows the port to automatically detect that it is an edge port. If it does not receive any BPDUs in the first three seconds after linkup, enabling, or entering RSTP or MSTP mode, it sets itself to be an edgeport and enters the forwarding state.

Use this command for RSTP or MSTP.

Use the **no** variant of this command to disable this feature.

**Syntax**

```
spanning-tree autoedge
no spanning-tree autoedge
```

**Default**

Disabled

**Mode**

Interface Configuration

**Example**

```
awplus# configure terminal
awplus(config)# interface port1.0.3
awplus(config-if)# spanning-tree autoedge
```

**Related commands**

spanning-tree edgeport (RSTP and MSTP)

# spanning-tree cisco-interoperability (MSTP)

**Overview** Use this command to enable/disable Cisco-interoperability for MSTP.

Use this command for MSTP only.

**Syntax**

```
spanning-tree cisco-interoperability {enable|disable}
```

| Parameter | Description |
|---|---|
| `enable` | Enable Cisco interoperability for MSTP. |
| `disable` | Disable Cisco interoperability for MSTP. |

**Default** If this command is not used, Cisco interoperability is disabled.

**Mode** Global Configuration

**Usage** For compatibility with certain Cisco devices, all devices in the switched LAN running the AlliedWare Plus™ Operating System must have Cisco-interoperability enabled. When the AlliedWare Plus Operating System is interoperating with Cisco, the only criteria used to classify a region are the region name and revision level. VLAN to instance mapping is not used to classify regions when interoperating with Cisco.

**Examples** To enable Cisco interoperability on a Layer 2 device:

```
awplus# configure terminal
awplus(config)# spanning-tree cisco-interoperability enable
```

To disable Cisco interoperability on a Layer 2 device:

```
awplus# configure terminal
awplus(config)# spanning-tree cisco-interoperability disable
```

# spanning-tree edgeport (RSTP and MSTP)

**Overview**

Use this command to set a port as an edge-port.

Use this command for RSTP or MSTP.

This command has the same effect as the spanning-tree portfast (STP) command, but the configuration displays differently in the output of some show commands.

Use the **no** variant of this command to set a port to its default state (not an edge-port).

**Syntax**

```
spanning-tree edgeport
no spanning-tree edgeport
```

**Default**

Not an edge port.

**Mode**

Interface Configuration

**Usage notes**

Use this command on a switch port connected to a LAN that has no other bridges attached. If a BPDU is received on the port that indicates that another bridge is connected to the LAN, then the port is no longer treated as an edge port.

**Example**

```
awplus# configure terminal
awplus(config)# interface port1.0.2
awplus(config-if)# spanning-tree edgeport
```

**Related commands**

spanning-tree autoedge (RSTP and MSTP)

# spanning-tree enable

**Overview** Use this command in Global Configuration mode to enable the specified spanning tree protocol for all switch ports. Note that this must be the spanning tree protocol that is configured on the device by the spanning-tree mode command.

Use the **no** variant of this command to disable the configured spanning tree protocol. This places all switch ports in the forwarding state.

**Syntax**

```
spanning-tree {mstp|rstp|stp} enable
no spanning-tree {mstp|rstp|stp} enable
```

| Parameter | Description |
|---|---|
| mstp | Enables or disables MSTP (Multiple Spanning Tree Protocol). |
| rstp | Enables or disables RSTP (Rapid Spanning Tree Protocol). |
| stp | Enables or disables STP (Spanning Tree Protocol). |

**Default** RSTP is enabled by default for all switch ports.

**Mode** Global Configuration

**Usage** With no configuration, spanning tree is enabled, and the spanning tree mode is set to RSTP. To change the mode, see spanning-tree mode command.

**Examples** To enable STP in Global Configuration mode, enter the below commands:

```
awplus# configure terminal
awplus(config)# spanning-tree stp enable
```

To disable STP in Global Configuration mode, enter the below commands:

```
awplus# configure terminal
awplus(config)# no spanning-tree stp enable
```

To enable MSTP in Global Configuration mode, enter the below commands:

```
awplus# configure terminal
awplus(config)# spanning-tree mstp enable
```

To disable MSTP in Global Configuration mode, enter the below commands:

```
awplus# configure terminal
awplus(config)# no spanning-tree mstp enable
```

To enable RSTP in Global Configuration mode, enter the below commands:

```
awplus# configure terminal
awplus(config)# spanning-tree rstp enable
```

To disable RSTP in Global Configuration mode, enter the below commands:

```
awplus# configure terminal
awplus(config)# no spanning-tree rstp enable
```

**Related commands**

spanning-tree mode

# spanning-tree errdisable-timeout enable

**Overview**

Use this command to enable the errdisable-timeout facility, which sets a timeout for ports that are disabled due to the BPDU guard feature.

Use this command for RSTP or MSTP.

Use the **no** variant of this command to disable the errdisable-timeout facility.

**Syntax**

```
spanning-tree errdisable-timeout enable
no spanning-tree errdisable-timeout enable
```

**Default**

By default, the errdisable-timeout is disabled.

**Mode**

Global Configuration

**Usage**

The BPDU guard feature shuts down the port on receiving a BPDU on a BPDU-guard enabled port. This command associates a timer with the feature such that the port is re- enabled without manual intervention after a set interval. This interval can be configured by the user using the spanning-tree errdisable-timeout interval command.

**Example**

```
awplus# configure terminal
awplus(config)# spanning-tree errdisable-timeout enable
```

**Related commands**

show spanning-tree

spanning-tree errdisable-timeout interval

spanning-tree portfast bpdu-guard

# spanning-tree errdisable-timeout interval

**Overview** Use this command to specify the time interval after which a port is brought back up when it has been disabled by the BPDU guard feature.

Use this command for RSTP or MSTP.

**Syntax**

```
spanning-tree errdisable-timeout interval <10-1000000>
no spanning-tree errdisable-timeout interval
```

| Parameter | Description |
|---|---|
| *<10-1000000>* | Specify the errdisable-timeout interval in seconds. |

**Default** By default, the port is re-enabled after 300 seconds.

**Mode** Global Configuration

**Example**

```
awplus# configure terminal
awplus(config)# spanning-tree errdisable-timeout interval 34
```

**Related commands**

show spanning-tree

spanning-tree errdisable-timeout enable

spanning-tree portfast bpdu-guard

# spanning-tree force-version

**Overview** Use this command in Interface Configuration mode for a switch port interface only to force the protocol version for the switch port. Use this command for RSTP or MSTP only.

**Syntax**

```
spanning-tree force-version <version>
no spanning-tree force-version
```

| Parameter | Description | |
|---|---|---|
| *<version>* | <0-3> Version identifier. | |
| | 0 | Forces the port to operate in STP mode. |
| | 1 | Not supported. |
| | 2 | Forces the port to operate in RSTP mode. If it receives STP BPDUs, it can automatically revert to STP mode. |
| | 3 | Forces the port to operate in MSTP mode (this option is only available if MSTP mode is configured). If it receives RSTP or STP BPDUs, it can automatically revert to RSTP or STP mode. |

**Default** By default, no version is forced for the port. The port is in the spanning tree mode configured for the device, or a lower version if it automatically detects one.

**Mode** Interface Configuration mode for a switch port interface only.

**Examples** Set the value to enforce the spanning tree protocol (STP):

```
awplus# configure terminal
awplus(config)# interface port1.0.2
awplus(config-if)# spanning-tree force-version 0
```

Set the default protocol version:

```
awplus# configure terminal
awplus(config)# interface port1.0.2
awplus(config-if)# no spanning-tree force-version
```

**Related commands** show spanning-tree

# spanning-tree forward-time

**Overview**

Use this command to set the forward delay value. Use the **no** variant of this command to reset the forward delay value to the default setting of 15 seconds.

The **forward delay** sets the time (in seconds) to control how fast a port changes its spanning tree state when moving towards the forwarding state. If the mode is set to STP, the value determines how long the port stays in each of the listening and learning states which precede the forwarding state. If the mode is set to RSTP or MSTP, this value determines the maximum time taken to transition from discarding to learning and from learning to forwarding.

This value is used only when the device is acting as the root bridge. Devices not acting as the Root Bridge use a dynamic value for the **forward delay** set by the root bridge. The **forward delay**, **max-age**, and **hello time** parameters are interrelated.

**Syntax**

```
spanning-tree forward-time <forward-delay>
no spanning-tree forward-time
```

| Parameter | Description |
|---|---|
| *<forward-delay>* | <4-30> The forwarding time delay in seconds. |

**Default**

The default is 15 seconds.

**Mode**

Global Configuration

**Usage notes**

The allowable range for forward-time is 4-30 seconds.

The **forward delay**, **max-age**, and **hello time** parameters should be set according to the following formula, as specified in IEEE Standard 802.1d:

2 x (forward delay - 1.0 seconds) >= max-age

max-age >= 2 x (hello time + 1.0 seconds)

**Example**

```
awplus# configure terminal
awplus(config)# spanning-tree forward-time 6
```

**Related commands**

show spanning-tree

spanning-tree forward-time

spanning-tree hello-time

spanning-tree mode

# spanning-tree guard root

**Overview** Use this command in Interface Configuration mode for a switch port only to enable the Root Guard feature for the switch port. The root guard feature disables reception of superior BPDUs. You can use this command for RSTP, STP or MSTP.

Use the **no** variant of this command to disable the root guard feature for the port.

**Syntax**

```
spanning-tree guard root
no spanning-tree guard root
```

**Mode** Interface Configuration mode for a switch port interface only.

**Usage notes** The Root Guard feature makes sure that the port on which it is enabled is a designated port. If the Root Guard enabled port receives a superior BPDU, it goes to a Listening state (for STP) or discarding state (for RSTP and MSTP).

**Example**

```
awplus# configure terminal
awplus(config)# interface port1.0.2
awplus(config-if)# spanning-tree guard root
```

# spanning-tree hello-time

**Overview**

Use this command to set the hello-time. This sets the time in seconds between the transmission of device spanning tree configuration information when the device is the Root Bridge of the spanning tree or is trying to become the Root Bridge.

Use this command for RSTP, STP or MSTP.

Use the **no** variant of this command to restore the default of the hello time.

**Syntax**

```
spanning-tree hello-time <hello-time>
no spanning-tree hello-time
```

| Parameter | Description |
|---|---|
| *<hello-time>* | <1-10> The hello BPDU interval in seconds. |

**Default**

Default is 2 seconds.

**Mode**

Global Configuration and Interface Configuration for switch ports.

**Usage notes**

The allowable range of values is 1-10 seconds.

The forward delay, max-age, and hello time parameters should be set according to the following formula, as specified in IEEE Standard 802.1d:

2 x (forward delay - 1.0 seconds) >= max-age

max-age>= 2 x (hello time + 1.0 seconds)

**Example**

```
awplus# configure terminal
awplus(config)# spanning-tree hello-time 3
```

**Related commands**

spanning-tree forward-time

spanning-tree max-age

show spanning-tree

# spanning-tree link-type

**Overview** Use this command in Interface Configuration mode for a switch port interface only to enable or disable point-to-point or shared link types on the switch port.

Use this command for RSTP or MSTP only.

Use the **no** variant of this command to return the port to the default link type.

**Syntax**

```
spanning-tree link-type {point-to-point|shared}
no spanning-tree link-type
```

| Parameter | Description |
|---|---|
| `shared` | Disable rapid transition. |
| `point-to-point` | Enable rapid transition. |

**Default** The default link type is point-to-point.

**Mode** Interface Configuration mode for a switch port interface only.

**Usage notes** You may want to set link type to shared if the port is connected to a hub with multiple devices connected to it.

**Examples**

```
awplus# configure terminal
awplus(config)# interface port1.0.2
awplus(config-if)# spanning-tree link-type point-to-point
```

# spanning-tree max-age

**Overview** Use this command to set the max-age. This sets the maximum age, in seconds, that dynamic spanning tree configuration information is stored in the device before it is discarded.

Use this command for RSTP, STP or MSTP.

Use the **no** variant of this command to restore the default of max-age.

**Syntax**

```
spanning-tree max-age <max-age>
no spanning-tree max-age
```

| Parameter | Description |
|---|---|
| *<max-age>* | <6-40> The maximum time, in seconds. |

**Default** The default of spanning-tree max-age is 20 seconds.

**Mode** Global Configuration

**Usage** Max-age is the maximum time in seconds for which a message is considered valid.

Configure this value sufficiently high, so that a frame generated by the root bridge can be propagated to the leaf nodes without exceeding the max-age.

The **forward delay**, **max-age**, and **hello time** parameters should be set according to the following formula, as specified in IEEE Standard 802.1d:

2 x (forward delay - 1.0 seconds) >= max-age

max-age >= 2 x (hello time + 1.0 seconds)

**Example**

```
awplus# configure terminal
awplus(config)# spanning-tree max-age 12
```

**Related commands**

show spanning-tree

spanning-tree forward-time

spanning-tree hello-time

# spanning-tree max-hops (MSTP)

**Overview** Use this command to specify the maximum allowed hops for a BPDU in an MST region. This parameter is used by all the instances of the MST region.

Use the **no** variant of this command to restore the default.

Use this command for MSTP only.

**Syntax**

```
spanning-tree max-hops <hop-count>
no spanning-tree max-hops <hop-count>
```

| Parameter | Description |
|---|---|
| *<hop-count>* | Specify the maximum hops the BPDU will be valid for in the range <1-40>. |

**Default** The default max-hops in a MST region is 20.

**Mode** Global Configuration

**Usage** Specifying the max hops for a BPDU prevents the messages from looping indefinitely in the network. The hop count is decremented by each receiving port. When a device receives an MST BPDU that has a hop count of zero, it discards the BPDU.

**Examples**

```
awplus# configure terminal
awplus(config)# spanning-tree max-hops 25
awplus# configure terminal
awplus(config)# no spanning-tree max-hops
```

# spanning-tree mode

**Overview** Use this command to change the spanning tree protocol mode on the device. The spanning tree protocol mode on the device can be configured to either STP, RSTP or MSTP.

**Syntax**

```
spanning-tree mode {stp|rstp|mstp}
```

**Default** The default spanning tree protocol mode on the device is RSTP.

**Mode** Global Configuration

**Usage** With no configuration, the device will have spanning tree enabled, and the spanning tree mode will be set to RSTP. Use this command to change the spanning tree protocol mode on the device. MSTP is VLAN aware, but RSTP and STP are not VLAN aware. To enable or disable spanning tree operation, see the spanning-tree enable command.

**Examples** To change the spanning tree mode from the default of RSTP to MSTP, use the following commands:

```
awplus# configure terminal
awplus(config)# spanning-tree mode mstp
```

**Related commands** spanning-tree enable

# spanning-tree mst configuration

**Overview** Use this command to enter the MST Configuration mode to configure the Multiple Spanning-Tree Protocol.

**Syntax**

```
spanning-tree mst configuration
```

**Mode** Global Configuration

**Examples** The following example uses this command to enter MST Configuration mode. Note the change in the command prompt.

```
awplus# configure terminal
awplus(config)# spanning-tree mst configuration
awplus(config-mst)#
```

# spanning-tree mst instance

**Overview**

Use this command to assign a Multiple Spanning Tree instance (MSTI) to a switch port or channel group.

Note that ports are automatically configured to send and receive spanning-tree information for the associated MSTI when VLANs are assigned to MSTIs using the instance vlan (MSTP) command.

Use the **no** variant of this command in Interface Configuration mode to remove the MSTI from the specified switch port or channel group.

**Syntax**

```
spanning-tree mst instance <instance-id>
no spanning-tree mst instance <instance-id>
```

| Parameter | Description |
|---|---|
| *<instance-id>* | Specify an MSTP instance in the range 1-5. The MST instance must have already been created using the instance vlan (MSTP) command. |

**Default**

A port automatically becomes a member of an MSTI when it is assigned to a VLAN.

**Mode**

Interface Configuration mode for a switch port or channel group.

**Usage notes**

You can disable automatic configuration of member ports of a VLAN to an associated MSTI by using a **no spanning-tree mst instance** command to remove the member port from the MSTI. Use the **spanning-tree mst instance** command to add a VLAN member port back to the MSTI.

**Examples**

To assign instance 3 to a switch port, use the commands:

```
awplus# configure terminal
awplus(config)# interface port1.0.2
awplus(config-if)# spanning-tree mst instance 3
```

To remove instance 3 from a switch port, use the commands:

```
awplus# configure terminal
awplus(config)# interface port1.0.2
awplus(config-if)# no spanning-tree mst instance 3
```

**Related commands**

instance vlan (MSTP)

spanning-tree mst instance path-cost

spanning-tree mst instance priority

spanning-tree mst instance restricted-role

spanning-tree mst instance restricted-tcn

# spanning-tree mst instance path-cost

**Overview** Use this command to set the cost of a path associated with a switch port, for the specified MSTI.

This specifies the switch port's contribution to the cost of a path to the MSTI regional root via that port. This applies when the port is the root port for the MSTI.

Use the **no** variant of this command to restore the default cost value of the path.

**Syntax**

```
spanning-tree mst instance <instance-id> path-cost <path-cost>
no spanning-tree mst instance <instance-id> path-cost
```

| Parameter | Description |
|---|---|
| *<instance-id>* | Specify an MSTP instance in the range 1-5. |
| *<path-cost>* | Specify the cost of path in the range of <1-200000000>, where a lower path-cost indicates a greater likelihood of the specific interface becoming a root. |

**Default** The default path cost values and the range of recommended path cost values depend on the port speed, as shown in the following table from the IEEE 802.1q-2003 standard.

| Port speed | Default path cost | Recommended path cost range |
|---|---|---|
| Less than 100 Kb/s | 200,000,000 | 20,000,000-200,000,000 |
| 1Mbps | 20,000,000 | 2,000,000-20,000,000 |
| 10Mbps | 2,000,000 | 200,000-2,000,000 |
| 100 Mbps | 200,000 | 20,000-200,000 |
| 1 Gbps | 20,000 | 2,000-20,000 |
| 10 Gbps | 2,000 | 200-2,000 |
| 100 Gbps | 200 | 20-200 |
| 1Tbps | 20 | 2-200 |
| 10 Tbps | 2 | 2-20 |

**Mode** Interface Configuration mode for a switch port interface only.

**Usage notes** Before you can use this command to set a path-cost in a VLAN configuration, you must explicitly add an MST instance to a port using the spanning-tree mst instance command.

**Examples** To set a path cost of 1000 on instance 3, use the commands:

```
awplus# configure terminal
awplus(config)# interface port1.0.2
awplus(config-if)# spanning-tree mst instance 3 path-cost 1000
```

To return the path cost to its default value on instance 3, use the commands:

```
awplus# configure terminal
awplus(config)# interface port1.0.2
awplus(config-if)# no spanning-tree mst instance 3 path-cost
```

**Related commands**

instance vlan (MSTP)

spanning-tree mst instance

spanning-tree mst instance priority

spanning-tree mst instance restricted-role

spanning-tree mst instance restricted-tcn

# spanning-tree mst instance priority

**Overview**

Use this command in Interface Configuration mode for a switch port interface only to set the port priority for an MST instance (MSTI).

Use the **no** variant of this command to restore the default priority value (128).

**Syntax**

```
spanning-tree mst instance <instance-id> priority <priority>
no spanning-tree mst instance <instance-id> [priority]
```

| Parameter | Description |
|---|---|
| *<instance-id>* | Specify an MSTP instance in the range 1-5. |
| *<priority>* | This must be a multiple of 16 and within the range <0-240>. A lower priority indicates greater likelihood of the port becoming the root port. |

**Default**

The default is 128.

**Mode**

Interface Configuration mode for a switch port interface.

**Usage notes**

This command sets the value of the priority field contained in the port identifier. The MST algorithm uses the port priority when determining the root port for the switch in the MSTI. The port with the lowest value has the highest priority, so it will be chosen as root port over a port that is equivalent in all other aspects but with a higher priority value.

**Examples**

To set the priority to 112 on instance 3, use the commands:

```
awplus# configure terminal
awplus(config)# interface port1.0.2
awplus(config-if)# spanning-tree mst instance 3 priority 112
```

To return the priority to its default value of 128 on instance 3, use the commands:

```
awplus# configure terminal
awplus(config)# interface port1.0.2
awplus(config-if)# no spanning-tree mst instance 3 priority
```

**Related commands**

instance vlan (MSTP)

spanning-tree priority (port priority)

spanning-tree mst instance

spanning-tree mst instance path-cost

spanning-tree mst instance restricted-role

spanning-tree mst instance restricted-tcn

# spanning-tree mst instance restricted-role

**Overview** Use this command in Interface Configuration mode for a switch port interface only to enable the restricted role for an MSTI (Multiple Spanning Tree Instance) on a switch port. Configuring the restricted role for an MSTI on a switch port prevents the switch port from becoming the root port in a spanning tree topology.

Use the **no** variant of this command to disable the restricted role for an MSTI on a switch port. Removing the restricted role for an MSTI on a switch port allows the switch port to become the root port in a spanning tree topology.

**Syntax**

```
spanning-tree mst instance <instance-id> restricted-role
no spanning-tree mst instance <instance-id> restricted-role
```

| Parameter | Description |
|---|---|
| *<instance-id>* | Specify an MSTP instance in the range 1-5. The MST instance must have already been created using the instance vlan (MSTP) command. |

**Default** The restricted role for an MSTI instance on a switch port is disabled by default.

**Mode** Interface Configuration mode for a switch port interface only.

**Usage notes** The root port is the port providing the best path from the bridge to the root bridge. Use this command to disable a port from becoming a root port. Use the **no** variant of this command to enable a port to become a root port. See the STP Feature Overview and Configuration Guide for root port information.

**Examples** To prevent a switch port from becoming the root port, use the commands:

```
awplus# configure terminal
awplus(config)# interface port1.0.2
awplus(config-if)# spanning-tree mst instance 3 restricted-role
```

To stop preventing the switch port from becoming the root port, use the commands:

```
awplus# configure terminal
awplus(config)# interface port1.0.2
awplus(config-if)# no spanning-tree mst instance 3
restricted-role
```

**Related commands**

instance vlan (MSTP)

spanning-tree priority (port priority)

spanning-tree mst instance

spanning-tree mst instance path-cost

spanning-tree mst instance restricted-tcn

# spanning-tree mst instance restricted-tcn

**Overview**

Use this command to prevent a switch port from propagating received topology change notifications and topology changes to other switch ports. This is named restricted TCN (Topology Change Notification). A TCN is a simple Bridge Protocol Data Unit (BPDU) that a bridge sends out to its root port to signal a topology change.

Use the **no** variant of this command to stop preventing the switch port from propagating received topology change notifications and topology changes to other switch ports for the specified MSTI (Multiple Spanning Tree Instance).

The restricted TCN setting applies only to the specified MSTI (Multiple Spanning Tree Instance).

**Syntax**

```
spanning-tree mst instance <instance-id> restricted-tcn
no spanning-tree mst instance <instance-id> restricted-tcn
```

| Parameter | Description |
|---|---|
| *<instance-id>* | Specify an MSTP instance in the range 1-5. The MST instance must have already been created using the instance vlan (MSTP) command. |

**Default**

Disabled. By default, switch ports propagate TCNs.

**Mode**

Interface Configuration mode for a switch port interface only.

**Examples**

To prevent a switch port from propagating received topology change notifications and topology changes to other switch ports, use the commands:

```
awplus# configure terminal
awplus(config)# interface port1.0.2
awplus(config-if)# spanning-tree mst instance 3 restricted-tcn
```

To stop preventing a switch port from propagating received topology change notifications and topology changes to other switch ports, use the commands:

```
awplus# configure terminal
awplus(config)# interface port1.0.2
awplus(config-if)# no spanning-tree mst instance 3
restricted-tcn
```

**Related commands**

instance vlan (MSTP)

spanning-tree priority (port priority)

spanning-tree mst instance

spanning-tree mst instance path-cost

spanning-tree mst instance restricted-role

# spanning-tree path-cost

**Overview** Use this command in Interface Configuration mode for a switch port interface only to set the cost of a path for the specified port. This value then combines with others along the path to the root bridge in order to determine the total cost path value from the particular port, to the root bridge. The lower the numeric value, the higher the priority of the path. This applies when the port is the root port.

Use this command for RSTP, STP or MSTP. When MSTP mode is configured, this will apply to the port's path cost for the CIST.

**Syntax**

```
spanning-tree path-cost <pathcost>
no spanning-tree path-cost
```

| Parameter | Description |
|---|---|
| *<pathcost>* | <1-200000000> The cost to be assigned to the port. |

**Default** The default path cost values and the range of recommended path cost values depend on the port speed, as shown in the following table from the IEEE 802.1q-2003 and IEEE 802.1d-2004 standards.

| Port speed | Default path cost | Recommended path cost range |
|---|---|---|
| Less than 100 Kb/s | 200,000,000 | 20,000,000-200,000,000 |
| 1Mbps | 20,000,000 | 2,000,000-20,000,000 |
| 10Mbps | 2,000,000 | 200,000-2,000,000 |
| 100 Mbps | 200,000 | 20,000-200,000 |
| 1 Gbps | 20,000 | 2,000-20,000 |
| 10 Gbps | 2,000 | 200-2, 000 |
| 100 Gbps | 200 | 20-200 |
| 1Tbps | 20 | 2-200 |
| 10 Tbps | 2 | 2-20 |

**Mode** Interface Configuration mode for switch port interface only.

**Example**

```
awplus# configure terminal
awplus(config)# interface port1.0.2
awplus(config-if)# spanning-tree path-cost 123
```

# spanning-tree portfast (STP)

**Overview**

Use this command in Interface Configuration mode for a switch port interface only to set a port as an edge-port. The portfast feature enables a port to rapidly move to the forwarding state, without having first to pass through the intermediate spanning tree states. This command has the same effect as the spanning-tree edgeport (RSTP and MSTP) command, but the configuration displays differently in the output of some show commands.

***NOTE:*** *You can run either of two additional parameters with this command. To simplify the syntax these are documented as separate commands. See the following additional portfast commands:*

- spanning-tree portfast bpdu-filter command
- spanning-tree portfast bpdu-guard command.

You can obtain the same effect by running the spanning-tree edgeport (RSTP and MSTP) command. However, the configuration output may display differently in some show commands.

Use the **no** variant of this command to set a port to its default state (not an edge-port).

**Syntax**

```
spanning-tree portfast
no spanning-tree portfast
```

**Default**

Not an edge port.

**Mode**

Interface Configuration mode for a switch port interface only.

**Usage notes**

Portfast makes a port move from a blocking state to a forwarding state, bypassing both listening and learning states. The portfast feature is meant to be used for ports connected to end-user devices. Enabling portfast on ports that are connected to a workstation or server allows devices to connect to the network without waiting for spanning-tree to converge.

For example, you may need hosts to receive a DHCP address quickly and waiting for STP to converge would cause the DHCP request to time out. Ensure you do not use portfast on any ports connected to another device to avoid creating a spanning-tree loop on the network.

Use this command on a switch port that connects to a LAN with no other bridges attached. An edge port should never receive BPDUs. Therefore if an edge port receives a BPDU, the portfast feature takes one of three actions.

- Cease to act as an edge port and pass BPDUs as a member of a spanning tree network (spanning-tree portfast (STP) command disabled).
- Filter out the BPDUs and pass only the data and continue to act as a edge port (spanning-tree portfast bpdu-filter command enabled).
- Block the port to all BPDUs and data (spanning-tree portfast bpdu-guard command enabled).

**Example**

```
awplus# configure terminal
awplus(config)# interface port1.0.2
awplus(config-if)# spanning-tree portfast
```

**Related commands**

spanning-tree edgeport (RSTP and MSTP)

show spanning-tree

spanning-tree portfast bpdu-filter

spanning-tree portfast bpdu-guard

# spanning-tree portfast bpdu-filter

**Overview**

This command sets the bpdu-filter feature and applies a filter to any BPDUs (Bridge Protocol Data Units) received. Enabling this feature ensures that configured ports will not transmit any BPDUs and will ignore (filter out) any BPDUs received. BPDU Filter is not enabled on a port by default.

Using the **no** variant of this command to turn off the bpdu-filter, but retain the port's status as an enabled port. If the port then receives a BPDU it will change its role from an **edge-port** to a **non edge-port**.

**Syntax (Global Configuration)**

```
spanning-tree portfast bpdu-filter
no spanning-tree portfast bpdu-filter
```

**Syntax (Interface Configuration)**

```
spanning-tree portfast bpdu-filter
{default|disable|enable}
no spanning-tree portfast bpdu-filter
```

| Parameter | Description | |
|---|---|---|
| `bpdu-filter` | A port that has bpdu-filter enabled will not transmit any BPDUs and will ignore any BPDUs received. This port type has one of the following parameters (in Interface Configuration mode): | |
| | `default` | Takes the setting that has been configured for the whole device, i.e. the setting made from the Global configuration mode. |
| | `disable` | Turns off BPDU filter. |
| | `enable` | Turns on BPDU filter. |

**Default**

BPDU Filter is not enabled on any ports by default.

**Mode**

Global Configuration and Interface Configuration

**Usage notes**

This command filters the BPDUs and passes only data to continue to act as an edge port. Using this command in Global Configuration mode applies the portfast bpdu-filter feature to all ports on the device. Using it in Interface mode applies the feature to a specific port, or range of ports.The command will operate in both RSTP and MSTP networks.

Use the show spanning-tree command to display status of the bpdu-filter parameter for the switch ports.

**Example**

To enable STP BPDU filtering in Global Configuration mode, enter the commands:

```
awplus# configure terminal
awplus(config)# spanning-tree portfast bpdu-filter
```

To enable STP BPDU filtering in Interface Configuration mode, enter the commands:

```
awplus# configure terminal
awplus(config)# interface port1.0.2
awplus(config-if)# spanning-tree portfast bpdu-filter enable
```

**Related commands**

spanning-tree edgeport (RSTP and MSTP)

show spanning-tree

spanning-tree portfast (STP)

spanning-tree portfast bpdu-guard

# spanning-tree portfast bpdu-guard

**Overview**

The AR3050S and AR4050S devices don't support BPDU protection in 5.4.5-0.1 release.

This command applies a BPDU (Bridge Protocol Data Unit) guard to the port. A port with the bpdu-guard feature enabled will block all traffic (BPDUs and user data), if it starts receiving BPDUs.

Use this command in Global Configuration mode to apply BPDU guard to all ports on the device. Use this command in Interface mode for an individual interface or a range of interfaces specified. BPDU Guard is not enabled on a port by default.

Use the **no** variant of this command to disable the BPDU Guard feature on a device in Global Configuration mode or to disable the BPDU Guard feature on a port in Interface mode.

**Syntax (Global Configuration)**

```
spanning-tree portfast bpdu-guard
no spanning-tree portfast bpdu-guard
```

**Syntax (Interface Configuration)**

```
spanning-tree portfast bpdu-guard
{default|disable|enable}
no spanning-tree portfast bpdu-guard
```

| Parameter | Description | |
|---|---|---|
| `bpdu-guard` | A port that has bpdu-guard turned on will enter the STP blocking state if it receives a BPDU. This port type has one of the following parameters (in Interface Configuration mode): | |
| | `default` | Takes the setting that has been configured for the whole device, i.e. the setting made from the Global configuration mode. |
| | `disable` | Turns off BPDU guard. |
| | `enable` | Turns on BPDU guard and will also set the port as an edge port. |

**Default**

BPDU Guard is not enabled on any ports by default.

**Mode**

Global Configuration or Interface Configuration

**Usage notes**

This command blocks the port(s) to all devices and data when enabled. BPDU Guard is a port-security feature that changes how a portfast-enabled port behaves if it receives a BPDU. When **bpdu-guard** is set, then the port shuts down if it receives a BPDU. It does not process the BPDU as it is considered suspicious. When **bpdu-guard** is not set, then the port will negotiate spanning-tree with the device sending the BPDUs. By default, bpdu- guard is not enabled on a port.

You can configure a port disabled by the bpdu-guard to re-enable itself after a specific time interval. This interval is set with the spanning-tree errdisable-timeout

interval command. If you do not use the **errdisable-timeout** feature, then you will need to manually re-enable the port by using the **no shutdown** command.

Use the show spanning-tree command to display the device and port configurations for the BPDU Guard feature. It shows both the administratively configured and currently running values of bpdu-guard.

**Example**

To enable STP BPDU guard in Global Configuration mode, enter the below commands:

```
awplus# configure terminal
awplus(config)# spanning-tree portfast bpdu-guard
```

To enable STP BPDU guard in Interface Configuration mode, enter the below commands:

```
awplus# configure terminal
awplus(config)# interface port1.0.2
awplus(config-if)# spanning-tree portfast bpdu-guard enable
```

**Related commands**

spanning-tree edgeport (RSTP and MSTP)

show spanning-tree

spanning-tree portfast (STP)

spanning-tree portfast bpdu-filter

# spanning-tree priority (bridge priority)

**Overview** Use this command to set the bridge priority for the device. A lower priority value indicates a greater likelihood of the device becoming the root bridge.

Use this command for RSTP, STP or MSTP. When MSTP mode is configured, this will apply to the CIST.

Use the **no** variant of this command to reset it to the default.

**Syntax**

```
spanning-tree priority <priority>
no spanning-tree priority
```

| Parameter | Description |
|---|---|
| *<priority>* | <0-61440> The bridge priority, which will be rounded to a multiple of 4096. |

**Default** The default priority is 32678.

**Mode** Global Configuration

**Usage** To force a particular device to become the root bridge use a lower value than other devices in the spanning tree.

**Example**

```
awplus# configure terminal
awplus(config)# spanning-tree priority 4096
```

**Related commands**

spanning-tree mst instance priority

show spanning-tree

# spanning-tree priority (port priority)

**Overview**

Use this command in Interface Configuration mode for a switch port interface only to set the port priority for port. A lower priority value indicates a greater likelihood of the port becoming part of the active topology.

Use this command for RSTP, STP, or MSTP. When the device is in MSTP mode, this will apply to the CIST.

Use the **no** variant of this command to reset it to the default.

**Syntax**

```
spanning-tree priority <priority>
no spanning-tree priority
```

| Parameter | Description |
|---|---|
| *<priority>* | <0-240>, in increments of 16. The port priority, which will be rounded down to a multiple of 16. |

**Default**

The default priority is 128.

**Mode**

Interface Configuration mode for a switch port interface only.

**Usage notes**

To force a port to be part of the active topology (for instance, become the root port or a designated port) use a lower value than other ports on the device. (This behavior is subject to network topology, and more significant factors, such as bridge ID.)

**Example**

```
awplus# configure terminal
awplus(config)# interface port1.0.2
awplus(config-if)# spanning-tree priority 16
```

**Related commands**

spanning-tree mst instance priority

spanning-tree priority (bridge priority)

show spanning-tree

# spanning-tree restricted-role

**Overview** Use this command in Interface Configuration mode for a switch port interface only to restrict the port from becoming a root port.

Use the **no** variant of this command to disable the restricted role functionality.

**Syntax**

```
spanning-tree restricted-role
no spanning-tree restricted-role
```

**Default** The restricted role is disabled.

**Mode** Interface Configuration mode for a switch port interface only.

**Example**

```
awplus# configure terminal
awplus(config)# interface port1.0.2
awplus(config-if)# spanning-tree restricted-role
```

# spanning-tree restricted-tcn

**Overview** Use this command in Interface Configuration mode for a switch port interface only to prevent TCN (Topology Change Notification) BPDUs (Bridge Protocol Data Units) from being sent on a port. If this command is enabled, after a topology change a bridge is prevented from sending a TCN to its designated bridge.

Use the **no** variant of this command to disable the restricted TCN functionality.

**Syntax**

```
spanning-tree restricted-tcn
no spanning-tree restricted-tcn
```

**Default** The restricted TCN is disabled.

**Mode** Interface Configuration mode for a switch port interface only.

**Example**

```
awplus# configure terminal
awplus(config)# interface port1.0.2
awplus(config-if)# spanning-tree restricted-tcn
```

# spanning-tree transmit-holdcount

**Overview** Use this command to set the maximum number of BPDU transmissions that are held back.

Use the **no** variant of this command to restore the default transmit hold-count value.

**Syntax**

```
spanning-tree transmit-holdcount
no spanning-tree transmit-holdcount
```

**Default** Transmit hold-count default is 3.

**Mode** Global Configuration

**Example**

```
awplus# configure terminal
awplus(config)# spanning-tree transmit-holdcount
```

# undebug mstp

**Overview** This command applies the functionality of the no debug mstp (RSTP and STP) command.

# 19 Link Aggregation Commands

## Introduction

**Overview** This chapter provides an alphabetical reference of commands used to configure a static channel group (static aggregator) and dynamic channel group (LACP channel group, etherchannel or LACP aggregator). Link aggregation is also sometimes referred to as channeling.

***NOTE:*** *AlliedWare Plus™ supports IEEE 802.3ad link aggregation and uses the Link Aggregation Control Protocol (LACP). LACP does not interoperate with devices that use Port Aggregation Protocol (PAgP).*

*Link aggregation does not necessarily achieve exact load balancing across the links. The load sharing algorithm is designed to ensure that any given data flow always goes down the same link. It also aims to spread data flows across the links as evenly as possible.*

*For example, for a 2 Gbps LAG that is a combination of two 1 Gbps ports, any one flow of traffic can only ever reach a maximum throughput of 1 Gbps. However, the hashing algorithm should spread the flows across the links so that when many flows are operating, the full 2 Gbps can be utilized.*

For a description of static and dynamic link aggregation (LACP), and configuration examples, see the Link Aggregation Feature Overview and Configuration Guide.

**Command List**


- "channel-group" on page 647
- "clear lacp counters" on page 649
- "debug lacp" on page 650
- "lacp global-passive-mode enable" on page 651
- "lacp port-priority" on page 652
- "lacp system-priority" on page 653
- "lacp timeout" on page 654
- "show debugging lacp" on page 656
- "show diagnostic channel-group" on page 657

- "show etherchannel" on page 658
- "show etherchannel detail" on page 659
- "show etherchannel summary" on page 660
- "show lacp sys-id" on page 661
- "show lacp-counter" on page 662
- "show port etherchannel" on page 663
- "show static-channel-group" on page 664
- "static-channel-group" on page 665
- "undebug lacp" on page 667

# channel-group

**Overview** Use this command to create a dynamic channel group, or to add a port to an existing dynamic channel group.

You can create up to 2 channel groups, in any combination of static and dynamic (LACP) groups. This means you can create up to 2 dynamic channel groups, if you have no static channel groups.

Use the **no** variant of this command to turn off link aggregation on the device port. You will be returned to Global Configuration mode from Interface Configuration mode.

**Syntax**

```
channel-group <dynamic-channel-group-number> mode
{active|passive}
```

```
no channel-group
```

| Parameter | Description |
|---|---|
| *<dynamic-channel-group-number>* | <1-248> Dynamic channel group number for an LACP link. You can create up to 2 dynamic channel groups, numbered in the range 1-248. |
| `active` | Enables initiation of LACP negotiation on a port. The port will transmit LACP dialogue messages whether or not it receives them from the partner device. |
| `passive` | Disables initiation of LACP negotiation on a port. The port will only transmit LACP dialogue messages if the partner device is transmitting them, i.e., the partner is in the active mode. |

**Mode** Interface Configuration

**Usage notes** All the device ports in a channel-group must belong to the same VLANs, have the same tagging status, and can only be operated on as a group. All device ports within a channel group must have the same port speed and be in full duplex mode.

Once the LACP channel group has been created, it is treated as a device port. You can specify it in other commands. If you are specifying it in:

- an LACP command, then use the channel-group number on its own. For example, use the command **show etherchannel 2** to show details about channel group 2.
- a non-LACP command, then use **po** followed by the channel-group number. For example, use the command **show interface po2** to show details about channel group 2's interface.

For more information about LACP, see the Link Aggregation Feature Overview and Configuration Guide which is available on our website at alliedtelesis.com.

**Examples**

To add device port1.0.2 to a newly created LACP channel group 2, in active mode, use the commands below:

```
awplus# configure terminal
awplus(config)# interface port1.0.2
awplus(config-if)# channel-group 2 mode active
```

To remove device port1.0.2 from any created LACP channel groups, use the command below:

```
awplus# configure terminal
awplus(config)# interface port1.0.2
awplus(config-if)# no channel-group
```

To reference channel group 2 as an interface, use the following commands:

```
awplus# configure terminal
awplus(config)# interface po2
awplus(config-if)#
```

**Related commands**

show etherchannel

show etherchannel detail

show etherchannel summary

show port etherchannel

**Command changes**

Version 5.4.9-0.1: Ability added to create up to 2 groups as any combination of static and dynamic channel groups. Also, numbering changed to 1-248.

# clear lacp counters

**Overview** Use this command to clear all counters of all present LACP aggregators (channel groups) or a given LACP aggregator.

**Syntax** `clear lacp [<1-248>] counters`

| Parameter | Description |
|---|---|
| *<1-248>* | Channel-group number. |

**Mode** Privileged Exec

**Example** `awplus# clear lacp 2 counters`

# debug lacp

**Overview** Use this command to enable all LACP troubleshooting functions.

Use the **no** variant of this command to disable this function.

**Syntax**

```
debug lacp {all|cli|event|ha|packet|sync|timer[detail]}
no debug lacp {all|cli|event|ha|packet|sync|timer[detail]}
```

| Parameter | Description |
|---|---|
| `all` | Turn on all debugging for LACP. |
| `cli` | Specifies debugging for CLI messages.<br>Echoes commands to the console. |
| `event` | Specifies debugging for LACP events.<br>Echoes events to the console. |
| `ha` | Specifies debugging for HA (High Availability) events.<br>Echoes High Availability events to the console. |
| `packet` | Specifies debugging for LACP packets.<br>Echoes packet contents to the console. |
| `sync` | Specified debugging for LACP synchronization.<br>Echoes synchronization to the console. |
| `timer` | Specifies debugging for LACP timer.<br>Echoes timer expiry to the console. |
| `detail` | Optional parameter for LACP timer-detail.<br>Echoes timer start/stop details to the console. |

**Mode** Privileged Exec and Global Configuration

**Examples**

```
awplus# debug lacp timer detail
awplus# debug lacp all
```

**Related commands**

show debugging lacp

undebug lacp

# lacp global-passive-mode enable

**Overview**

Use this command to enable LACP channel-groups to dynamically self-configure when they are connected to another device that has LACP channel-groups configured with Active Mode.

**Syntax**

```
lacp global-passive-mode enable
no lacp global-passive-mode enable
```

**Default**

Enabled

**Mode**

Global Configuration

**Usage notes**

Do not mix LACP configurations (manual and dynamic). When LACP global passive mode is turned on (by using the **lacp global-passive-mode enable** command), we do not recommend using a mixed configuration in a LACP channel-group; i.e. some links are manually configured (by the **channel-group** command) and others are dynamically learned in the same channel-group.

**Example**

To enable global passive mode for LACP channel groups, use the command:

```
awplus(config)# lacp global-passive-mode enable
```

To disable global passive mode for LACP channel groups, use the command:

```
awplus(config)# no lacp global-passive-mode enable
```

**Related commands**

show etherchannel

show etherchannel detail

# lacp port-priority

**Overview** Use this command to set the priority of a device port. Ports are selected for aggregation based on their priority, with the higher priority (numerically lower) ports selected first.

Use the **no** variant of this command to reset the priority of port to the default.

**Syntax**

```
lacp port-priority <1-65535>
no lacp port-priority
```

| Parameter | Description |
|---|---|
| *<1-65535>* | Specify the LACP port priority. |

**Default** The default is 32768.

**Mode** Interface Configuration

**Example**

```
awplus# configure terminal
awplus(config)# interface port1.0.2
awplus(config-if)# lacp port-priority 34
```

# lacp system-priority

**Overview** Use this command to set the system priority of a local system. This is used in determining the system responsible for resolving conflicts in the choice of aggregation groups.

Use the **no** variant of this command to reset the system priority of the local system to the default.

**Syntax**

```
lacp system-priority <1-65535>
no lacp system-priority
```

| Parameter | Description |
|---|---|
| *<1-65535>* | LACP system priority. Lower numerical values have higher priorities. |

**Default** The default is 32768.

**Mode** Global Configuration

**Example**

```
awplus# configure terminal
awplus(config)# lacp system-priority 6700
```

# lacp timeout

**Overview** Use this command to set the short or long timeout on a port. Ports will time out of the aggregation if three consecutive updates are lost.

**Syntax**

```
lacp timeout {short|long}
```

| Parameter | Description |
|---|---|
| `timeout` | Number of seconds before invalidating a received LACP data unit (DU). |
| `short` | LACP short timeout. The **short** timeout value is **1** second. |
| `long` | LACP long timeout. The **long** timeout value is **30** seconds. |

**Default** The default is **long** timeout (30 seconds).

**Mode** Interface Configuration

**Usage notes** This command enables the device to indicate the rate at which it expects to receive LACPDUs from its neighbor.

If the timeout is set to **long**, then the device expects to receive an update every **30** seconds, and this will time a port out of the aggregation if no updates are seen for 90 seconds (i.e. 3 consecutive updates are lost).

If the timeout is set to **short**, then the device expects to receive an update every second, and this will time a port a port out of the aggregation if no updates are seen for 3 seconds (i.e. 3 consecutive updates are lost).

The device indicates its preference by means of the Timeout field in the Actor section of its LACPDUs. If the Timeout field is set to 1, then the device has set the **short** timeout. If the Timeout field is set to 0, then the device has set the **long** timeout.

Setting the **short** timeout enables the device to be more responsive to communication failure on a link, and does not add too much processing overhead to the device (1 packet per second).

***NOTE:*** *It is not possible to configure the rate that the device sends LACPDUs; the device must send at the rate which the neighbor indicates it expects to receive LACPDUs.*

**Examples** The following commands set the LACP long timeout period for 30 seconds on port1.0.2.

```
awplus# configure terminal
awplus(config)# interface port1.0.2
awplus(config-if)# lacp timeout long
```

The following commands set the LACP short timeout for 1 second on port1.0.2.

```
awplus# configure terminal
awplus(config)# interface port1.0.2
awplus(config-if)# lacp timeout short
```

# show debugging lacp

**Overview** Use this command to see what debugging is turned on for LACP management.

For information on filtering and saving command output, see the "Getting Started with AlliedWare Plus" Feature Overview and Configuration Guide.

**Syntax**

```
show debugging lacp
```

**Mode** User Exec and Privileged Exec

**Example**

```
awplus# show debugging lacp
```

**Output** Figure 19-1: Example output from the **show debugging lacp** command

```
LACP debugging status:
 LACP timer debugging is on
 LACP timer-detail debugging is on
 LACP cli debugging is on
 LACP packet debugging is on
 LACP event debugging is on
 LACP sync debugging is on
```

**Related commands** debug lacp

# show diagnostic channel-group

**Overview** This command displays dynamic and static channel group interface status information. The output of this command is useful for Allied Telesis authorized service personnel for diagnostic purposes.

For information on filtering and saving command output, see the "Getting Started with AlliedWare Plus" Feature Overview and Configuration Guide.

**Syntax**

```
show diagnostic channel-group
```

**Mode** User Exec and Privileged Exec

**Example**

```
awplus# show diagnostic channel-group
```

**Output** Figure 19-2: Example output from the **show diagnostic channel-group** command

```
awplus# show diagnostic channel-group

Channel Group Info based on NSM:
Note: Pos - position in hardware table
-------------------------------------------------------------
Dev  Interface  IfIndex  Member port  IfIndex  Active  Pos
-------------------------------------------------------------
     po1        4601     port1.0.4    5004     No
     po1        4601     port1.0.5    5005     No


Channel Group Info based on HSL:
Note: Pos - position in hardware table
-------------------------------------------------------------
Dev  Interface  IfIndex  Member port  IfIndex  Active  Pos
-------------------------------------------------------------
     po1        4601                           N/a


Channel Group Info based on IPIFWD:
Note: Pos - position in hardware table
-------------------------------------------------------------
Dev  Interface  IfIndex  Member port  IfIndex  Active  Pos
-------------------------------------------------------------
     po1        4601                           N/a


No error found
```

**Related commands** show tech-support

# show etherchannel

**Overview** Use this command to display information about an LACP channel specified by the channel group number.

For information on filtering and saving command output, see the "Getting Started with AlliedWare Plus" Feature Overview and Configuration Guide, which is available on our website at alliedtelesis.com.

**Syntax** `show etherchannel [<1-248>]`

| Parameter | Description |
|---|---|
| *<1-248>* | Channel-group number. |

**Mode** User Exec and Privileged Exec

**Example** `awplus# show etherchannel`

**Output** Figure 19-3: Example output from **show etherchannel**

```
awplus#show etherchannel
LAG Maximum        : 2
LAG Static  Count  : 0
LAG Dynamic Count  : 1
LAG Total   Count  : 1
Lacp Aggregator: po1
Member:
 port1.0.1
port1.0.2
```

**Example** `awplus# show etherchannel 1`

**Output** Figure 19-4: Example output from **show etherchannel** for a particular channel

```
awplus#show etherchannel 1
Aggregator po1 (4601)
 Mac address: 00:00:00:00:00:00
 Admin Key: 0001 - Oper Key 0000
 Receive link count: 0 - Transmit link count: 0
 Individual: 0 - Ready: 0
 Partner LAG: 0x0000,00-00-00-00-00-00
  Link: port1.0.1 (5001) disabled
  Link: port1.0.2 (5002) disabled
```

# show etherchannel detail

**Overview** Use this command to display detailed information about all LACP channels.

For information on filtering and saving command output, see the "Getting Started with AlliedWare Plus" Feature Overview and Configuration Guide, which is available on our website at alliedtelesis.com.

**Syntax** `show etherchannel detail`

**Mode** User Exec and Privileged Exec

**Example** `awplus# show etherchannel detail`

**Output** Example output from **show etherchannel detail**

```
awplus#show etherchannel detail
Aggregator po1 (IfIndex: 4601)
 Mac address: 00:00:cd:37:05:17
 Admin Key: 0001 - Oper Key 0001
 Receive link count: 2 - Transmit link count: 2
 Individual: 0 - Ready: 1
 Partner LAG: 0x8000,00-00-cd-37-02-9a,0x0001
  Link: port1.0.1 (IfIndex: 8002) synchronized
  Link: port1.0.2 (IfIndex: 20002) synchronized
Aggregator po2 (IfIndex: 4602)
 Mac address: 00:00:cd:37:05:17
 Admin Key: 0002 - Oper Key 0002
 Receive link count: 2 - Transmit link count: 2
 Individual: 0 - Ready: 1
 Partner LAG: 0x8000,ec-cd-6d-aa-c8-56,0x0002
  Link: port1.0.3 (IfIndex: 8001) synchronized
  Link: port1.0.4 (IfIndex: 20001) synchronized
```

# show etherchannel summary

**Overview** Use this command to display a summary of all LACP channels.

For information on filtering and saving command output, see the "Getting Started with AlliedWare Plus" Feature Overview and Configuration Guide, which is available on our website at alliedtelesis.com.

**Syntax** `show etherchannel summary`

**Mode** User Exec and Privileged Exec

**Example** `awplus# show etherchannel summary`

**Output** Example output from **show etherchannel summary**

```
awplus#show etherchannel summary
Aggregator po10 (IfIndex: 4610)
 Admin Key: 0010 - Oper Key 0010
  Link: port1.0.1 (IfIndex: 7007) synchronized
  Link: port1.0.2 (IfIndex: 8007) synchronized
  Link: port1.0.3 (IfIndex: 11007) synchronized
```

# show lacp sys-id

**Overview** Use this command to display the LACP system ID and priority.

For information on filtering and saving command output, see the "Getting Started with AlliedWare Plus" Feature Overview and Configuration Guide, which is available on our website at alliedtelesis.com.

**Syntax** `show lacp sys-id`

**Mode** User Exec and Privileged Exec

**Example** `awplus# show lacp sys-id`

**Output** Example output from **show lacp sys-id**

```
System Priority: 0x8000 (32768)
MAC Address: 0200.0034.5684
```

# show lacp-counter

**Overview** Use this command to display the packet traffic on all ports of all present LACP aggregators, or a given LACP aggregator.

For information on filtering and saving command output, see the "Getting Started with AlliedWare Plus" Feature Overview and Configuration Guide, which is available on our website at alliedtelesis.com.

**Syntax** `show lacp-counter [<1-248>]`

| Parameter | Description |
|---|---|
| *<1-248>* | Channel-group number. |

**Mode** User Exec and Privileged Exec

**Example** `awplus# show lacp-counter 2`

**Output** Example output from **show lacp-counter**

```
% Traffic statistics
Port          LACPDUs         Marker         Pckt err
           Sent     Recv     Sent     Recv     Sent     Recv
% Aggregator po2 (IfIndex: 4604)
port1.0.2   0        0        0        0        0        0
```

# show port etherchannel

**Overview** Use this command to show LACP details of the device port specified.

For information on filtering and saving command output, see the "Getting Started with AlliedWare Plus" Feature Overview and Configuration Guide, which is available on our website at alliedtelesis.com.

**Syntax** `show port etherchannel <port>`

| Parameter | Description |
|---|---|
| *<port>* | Name of the device port to display LACP information about. |

**Mode** User Exec and Privileged Exec

**Example** `awplus# show port etherchannel port1.0.2`

**Output** Example output from **show port etherchannel**

```
awplus#show port etherchannel port1.0.2
LACP link info: port1.0.2 - 7007
Link: port1.0.2 (IfIndex: 7007)
Aggregator: po10 (IfIndex: 4610)
Receive machine state: Current
Periodic Transmission machine state: Slow periodic
Mux machine state: Collecting/Distributing
Actor Information:                        Partner Information:
 Selected ................. Selected      Partner Sys Priority ....... 0x8000
 Physical Admin Key ............. 2       Partner System .. ec-cd-6d-d1-64-d0
 Port Key ...................... 10       Port Key ...................... 10
 Port Priority ............... 32768      Port Priority ............... 32768
 Port Number ................. 7007       Port Number ................. 5001
 Mode ...................... Active       Mode ...................... Active
 Timeout ...................... Long      Timeout ...................... Long
 Individual ................... Yes       Individual ................... Yes
 Synchronised ................. Yes       Synchronised ................. Yes
 Collecting ................... Yes       Collecting ................... Yes
 Distributing ................. Yes       Distributing ................. Yes
 Defaulted ..................... No       Defaulted ..................... No
 Expired ....................... No       Expired ....................... No
```

# show static-channel-group

**Overview** Use this command to display all configured static channel groups and their corresponding member ports. Note that a static channel group is the same as a static aggregator.

For information on filtering and saving command output, see the "Getting Started with AlliedWare Plus" Feature Overview and Configuration Guide, which is available on our website at alliedtelesis.com.

**Syntax**

```
show static-channel-group
```

**Mode** User Exec and Privileged Exec

**Example**

```
awplus# show static-channel-group
```

**Output** Example output from **show static-channel-group**

```
% LAG Maximum        : 2
% LAG Static  Count  : 2
% LAG Dynamic Count  : 0
% LAG Total   Count  : 2
% Static Aggregator: sa2
% Member:
   port1.0.1
port1.0.2
% Static Aggregator: sa3
% Member:
   port1.0.3
port1.0.4
```

**Related commands** static-channel-group

# static-channel-group

**Overview**

Use this command to create a static channel group, or to add a port to an existing static channel group. Static channel groups are also known as static aggregators.

You can create up to 2 channel groups, in any combination of static and dynamic (LACP) groups. This means you can create up to 2 static channel groups, if you have no dynamic channel groups.

Use the **no** variant of this command to remove the device port from the static channel group.

**Syntax**

```
static-channel-group <static-channel-group-number>
no static-channel-group
```

| Parameter | Description |
|---|---|
| *<static-channel-group-number>* | <1-248> Static channel group number.<br>You can create up to 2 static channel groups, numbered in the range 1-248. |

**Mode**

Interface Configuration

**Usage notes**

This command adds the device port to the static channel group with the specified channel group number. If the channel group does not exist, it is created, and the port is added to it. The **no** prefix detaches the port from the static channel group. If the port is the last member to be removed, the static channel group is deleted.

All the ports in a channel group must have the same VLAN configuration: they must belong to the same VLANs and have the same tagging status, and can only be operated on as a group.

Once the static channel group has been created, it is treated as a device port. You can specify it in other commands by using **sa** followed by the channel-group number. For example, use the command **show interface sa2** to show details about channel group 2's interface:

**Examples**

To define static channel group 2 on port1.0.2, use the commands:

```
awplus# configure terminal
awplus(config)# interface port1.0.2
awplus(config-if)# static-channel-group 2
```

To reference static channel group 2 as an interface, use the commands:

```
awplus# configure terminal
awplus(config)# interface sa2
awplus(config-if)#
```

**Related commands**

show static-channel-group

**Command changes** Version 5.4.9-0.1: Ability added to create up to 2 groups as any combination of static and dynamic channel groups. Also, numbering changed to 1-248.

# undebug lacp

**Overview** This command applies the functionality of the no debug lacp command.

# 20 802.1Q Encapsulation Commands

## Introduction

**Overview** This chapter provides an alphabetical reference of commands used to configure 802.1Q Encapsulation. For more information, see the Interface Feature Overview and Configuration Guide.

**Command List**


- "encapsulation dot1q" on page 669

# encapsulation dot1q

**Overview** Use this command to enable 802.1Q encapsulation on Ethernet interfaces, L2 tunnel interfaces (e.g. OpenVPN or L2TPv3 Ethernet pseudowire), or the VLAN-aware bridge 0.

Use the **no** variant of this command to disable 802.1Q encapsulation for the VLAN identified by the VLAN ID (VID).

**Syntax**

```
encapsulation dot1q <vid>
no encapsulation dot1q <vid>
```

| Parameter | Description |
|---|---|
| *<vid>* | Enter a VLAN ID in the range from 1 through 4094. The VLAN ID identifies the VLAN to which the frames belong. It also identifies the index of the subinterface of the Ethernet interface or Layer 2 tunnel interface. |

**Default** 802.1Q encapsulation is disabled by default on all Ethernet interfaces, Layer 2 tunnel interfaces, and bridge interfaces.

**Mode** Interface Configuration

**Usage notes** You should enter the Ethernet interface or tunnel interface configuration mode to enable 802.1Q encapsulation and configure the VID first. Then you can use the VID to configure the sub-interface associated with the Ethernet interface or tunnel interface. Sub-interfaces are logical interfaces. The sub interface index must be the same as the VID. For example, if you configure VID 1 for eth1, then the sub-interface for eth1 is eth1.1. If you configure VID 2 for tunnel20, then the sub-interface for tunnel20 is tunnel20.2.

**Examples** To enable 802.1Q encapsulation on Ethernet interface eth1, use the commands:

```
awplus# configure terminal
awuplus(config)# interface eth1
awplus(config-if)# encapsulation dot1q 1
```

To enable 802.1Q encapsulation on tunnel interface tunnel20, use the commands:

```
awplus# configure terminal
awuplus(config)# interface tunnel20
awplus(config-if)# encapsulation dot1q 2
```

To enable multiple 802.1Q encapsulation on Ethernet interface eth1, use the commands:

```
awplus# configure terminal
awuplus(config)# interface eth1
awplus(config-if)# encapsulation dot1q 1
awplus(config-if)# encapsulation dot1q 2
awplus(config-if)# encapsulation dot1q 3
```

To disable 802.1Q encapsulation on eth1, use the commands:

```
awplus# configure terminal
awuplus(config)# interface eth1
awuplus(config-if)# no encapsulation dot1q 1
```

**Related commands**

interface (to configure)

show interface

# 21 PPP Commands

## Introduction

**Overview** This chapter provides an alphabetical reference of commands used to configure and validate the PPP (Point-To-Point) protocol. For more information about PPP, see the Point-to-Point Protocol (PPP) Feature Overview and_Configuration Guide.

**Command List**


- "debug ppp" on page 673
- "encapsulation ppp" on page 676
- "interface (PPP)" on page 678
- "ip address negotiated" on page 679
- "ip tcp adjust-mss" on page 681
- "ip unnumbered" on page 683
- "ipv6 tcp adjust-mss" on page 685
- "keepalive (PPP)" on page 687
- "mtu (PPP)" on page 689
- "peer default ip address" on page 690
- "peer neighbor-route" on page 692
- "ppp authentication" on page 694
- "ppp authentication refuse" on page 696
- "ppp hostname" on page 698
- "ppp ipcp dns" on page 700
- "ppp ipcp dns suffix-list" on page 702
- "ppp ipcp ip-override" on page 704
- "ppp password" on page 705
- "ppp service-name (PPPoE)" on page 706

- "ppp timeout idle" on page 707
- "ppp username" on page 708
- "show debugging ppp" on page 709
- "show interface (PPP)" on page 710
- "undebug ppp" on page 714

# debug ppp

**Overview** Use this command to enable PPP protocol debugging on an optionally specified PPP interface or range of PPP interfaces to analyze PPP behavior when diagnosing PPP connectivity issues. If no interface is specified then debugging for all PPP interfaces is enabled.

Use the **no** variant of this command to disable PPP protocol debugging on the specified PPP interface. If no PPP interface is specified then PPP debugging for all PPP interfaces is disabled.

**Syntax**

```
debug ppp [interface <ppp-interface-list>]
no debug ppp [interface <ppp-interface-list>]
```

| Parameter | Description |
|---|---|
| *<ppp-interface- list>* | Specify a PPP interface or a range of PPP interfaces in the range ppp<0-255>. Use a hyphen between PPP interfaces to include all PPP interfaces in a given range, or use commas between PPP interfaces to specify non-contiguous PPP interfaces. |

**Default** No diagnostic messages are enabled for PPP debugging. PPP debugging is disabled by default.

**Mode** Global Configuration and Privileged Exec

**Usage notes** Debugging messages are sent to the logging system and can be viewed in log output, filtered in permanent or buffered logs, and viewed on the terminal using the terminal monitor command. See the status of PPP debugging with the show debugging ppp command.

Note that debugging output for PPP shows packet debugging and events debugging, see output below.

Note that disabling all debugging with the no debug all or the undebug all commands also disables PPP debugging configured with this command.

Note that the negated form of this command is an alias of the undebug ppp command.

**Examples** To enable PPP debugging on all PPP interfaces and send diagnostic messages to the system log, use the below command:

```
awplus# debug ppp
```

To enable PPP debugging on PPP interfaces `ppp0` through `ppp2` and display them on the console, use the below commands:

```
awplus# terminal monitor
awplus# debug ppp interface ppp0-ppp2
```

## Output of packet debugging

Figure 21-1: Example output from the **debug ppp** command on the console

```
awplus#terminal monitor
awplus#debug ppp

05:35:46 awplus pppd[24767]: [ppp0] [05:35:46.901] sent [IPCP
ConfReq id=0x1 <addr
0.0.0.0> <ms-dns1 0.0.0.0> <ms-dns2 0.0.0.0>]
05:35:46 awplus pppd[24767]: [ppp0] [05:35:46.901] sent [IPV6CP
ConfReq id=0x1
<addr fe80::eecd:6dff:fe3a:0d23>]
05:35:46 awplus pppd[24767]: [ppp0] [05:35:46.901] rcvd [LCP
ConfAck id=0x1 <magic
0xd9153444>]
05:35:46 awplus pppd[24767]: [ppp0] [05:35:46.919] rcvd [IPCP
ConfReq id=0x1 <addr
192.168.1.1>]
05:35:46 awplus pppd[24767]: [ppp0] [05:35:46.919] sent [IPCP
ConfAck id=0x1 <addr
192.168.1.1>]
05:35:46 awplus pppd[24767]: [ppp0] [05:35:46.919] rcvd [IPCP
ConfNak id=0x1 <addr
192.168.1.2> <ms-dns1 1.1.1.1> <ms-dns2 2.2.2.2>]
05:35:46 awplus pppd[24767]: [ppp0] [05:35:46.920] sent [IPCP
ConfReq id=0x2 <addr
192.168.1.2> <ms-dns1 1.1.1.1> <ms-dns2 2.2.2.2>]
05:35:46 awplus pppd[24767]: [ppp0] [05:35:46.921] rcvd [LCP
ProtRej id=0x2 80 57
01 01 00 0e 01 0a ee cd 6d ff fe 3a 0d 23]
05:35:46 awplus pppd[24767]: [ppp0] [05:35:46.921] Protocol-Reject
for 'IPv6
Control Protocol' (0x8057) received
05:35:46 awplus pppd[24767]: [ppp0] [05:35:46.922] rcvd [IPCP
ConfAck id=0x2 <addr
192.168.1.2> <ms-dns1 1.1.1.1> <ms-dns2 2.2.2.2>]
02:25:35 awplus pppd[2388]: [ppp1] [02:25:35.990] sent [LCP
EchoReq id=0x3b
magic=0xe1e041db]
02:25:35 awplus pppd[2388]: [ppp1] [02:25:35.991] rcvd [LCP
EchoReq id=0x3b
magic=0xe3e331b1]
02:25:35 awplus pppd[2388]: [ppp1] [02:25:35.991] sent [LCP
EchoRep id=0x3b
magic=0xe1e041db]
02:25:35 awplus pppd[2388]: [ppp1] [02:25:35.992] rcvd [LCP
EchoRep id=0x3b
magic=0xe3e331b1]
```

## Output of event debugging

Figure 21-2: Example output from the **debug ppp** command for a PPP interface

```
awplus#terminal monitor
awplus#debug ppp interface ppp0

05:35:43 awplus pppd[24767]: [ppp0] [05:35:43.710] using channel 1
05:35:43 awplus pppd[24767]: [ppp0] [05:35:43.712] Using interface
ppp0
05:35:43 awplus pppd[24767]: [ppp0] [05:35:43.712] Connect: ppp0
<--> hdlc0
05:35:46 awplus PPP: IP is up on interface ppp0 [local-IP:
192.168.1.2, remote-IP:
192.168.1.1]
05:35:46 awplus PPP: IPCP [ppp0]: add IP interface [IP-addr:
192.168.1.2, mask: ]
05:35:46 awplus PPP: IPCP [ppp0]: add host route [peer-IP:
192.168.1.1]
05:35:47 awplus PPP: IPCP [ppp0]: add domain name server [DNS:
1.1.1.1]
05:35:47 awplus PPP: IPCP [ppp0]: add domain name server [DNS:
2.2.2.2]
```

To record messages relating to PPP packets in the buffered log, first configure a buffered log filter to select the messages using the commands:

```
awplus# configure terminal
awplus(config)# log buffered level debug program pppd
awplus(config)# end
```

Then configure PPP debugging, using the below command:

```
awplus# debug ppp
```

To disable PPP debugging for all PPP interfaces, use the below command:

```
awplus# no debug ppp
```

## Related commands

terminal monitor

encapsulation ppp

no debug all

ppp authentication

show debugging ppp

show interface (PPP)

undebug all

# encapsulation ppp

**Overview** Use this command to enable PPP encapsulation and create one or more PPP interfaces over Ethernet, a cellular interface, or an L2TPv2 managed VPN.

Use the **no** variant of this command to disable PPP encapsulation and remove the specified PPP interface.

**Syntax**

```
encapsulation ppp <index>
no encapsulation ppp <index>
```

| Parameter | Description |
|---|---|
| *<index>* | The PPP interface index number in the range from 0 to 255. |

**Default** No PPP encapsulation or interfaces are configured by default.

**Mode** Interface Configuration mode for an Ethernet interface (e.g. **interface eth1**), or an Ethernet sub-interface (e.g. **interface eth1.1**), or a cellular interface (e.g. **interface cellular0**).

L2TP Tunnel Configuration mode for an L2TP tunnel (e.g. **l2tp tunnel tunnel0**).

**Examples** To configure a PPP interface with index 0 for Ethernet interface eth1, use the commands:

```
awplus# configure terminal
awplus(config)# interface eth1
awplus(config-if)# encapsulation ppp 0
```

To shut down the ppp0 interface and remove it from Ethernet interface eth1, use the commands:

```
awplus# configure terminal
awplus(config)# interface ppp0
awplus(config-if)# shutdown
awplus(config-if)# interface eth1
awplus(config-if)# no encapsulation ppp 0
```

To set the L2TP tunnel tunnel1 to encapsulate the PPP interface with index 1, use the commands:

```
awplus# configure terminal
awplus(config)# l2tp tunnel tunnel1
awplus(config-l2tp-tunnel)# encapsulation ppp 1
```

To remove the PPP interface with index 1 from L2TP tunnel tunnel1, use the commands:

```
awplus# configure terminal
awplus(config)# l2tp tunnel tunnel1
awplus(config-l2tp-tunnel)# no encapsulation ppp 1
```

**Related commands**

l2tp tunnel

ppp service-name (PPPoE)

show interface (PPP)

# interface (PPP)

**Overview** Use this command to select a PPP interface to configure.

You need to use the encapsulation ppp command to enable PPP encapsulation and create PPP interfaces first.

**Syntax**

```
interface <PPP-interface-list>
```

| Parameter | Description |
|---|---|
| *<PPP-interface-list>* | The PPP interfaces or ports to configure. An interface-list can be:<br>• a PPP interface (e.g. ppp0)<br>• a continuous range of PPP interfaces, separated by a hyphen (e.g. `ppp0-ppp2`)<br>• a comma-separated non-continuous list of PPP interfaces (e.g. `ppp0,ppp2`)<br>The specified interfaces must exist. |

**Mode** Global Configuration

**Example** The following example shows how to enter Interface mode to configure a PPP interface.

```
awplus# configure terminal
awplus(config)# interface ppp0
awplus(config-if)#
```

**Related commands**

ip address (IP Addressing and Protocol)

show interface

show interface brief

# ip address negotiated

**Overview** Use this command to obtain an IP address with the peer for a PPP interface via IPCP (Internet Protocol Control Protocol) address negotiation when configuring a PPP link for IP traffic.

Use the **no** variant of this command to remove IP address negotiation settings.

**Syntax**

```
ip address negotiated [<default-ip-address>]
no ip address negotiated
```

| Parameter | Description |
|---|---|
| *<default-ip-addr>* | Specify an optional default IP address for use instead of an IP address assigned from the peer that is otherwise configured for a PPP interface. |

**Default** No IP address negotiation with the peer is configured by default.

**Mode** Interface Configuration for a PPP interface

**Usage notes** Use this command to enable the device to automatically negotiate an IP address for a PPP interface, and to enable all remote hosts to access the device using this IP address. When the peer does not send an IP address via IPCP negotiation, the specified default IP address will be used.

**Examples** To configure the PPP interface ppp0 to use IPCP to negotiate an IP address for itself, use the below commands:

```
awplus# configure terminal
awplus(config)# interface ppp0
awplus(config-if)# ip address negotiated
```

To configure the PPP interface ppp0 to a default IP address of 10.9.9.2, for use when the peer does not send an IP address via IPCP negotiation, use the below commands:

```
awplus# configure terminal
awplus(config)# interface ppp0
awplus(config-if)# ip address negotiated 10.9.9.2
```

To stop the PPP interface ppp0 from using IPCP to negotiate an IP address for itself, use the below commands:

```
awplus# configure terminal
awplus(config)# interface ppp0
awplus(config-if)# no ip address negotiated
```

**Output** To verify IPCP address negotiation is configured on PPP interface ppp0, use the following command:

```
awplus# show running-config interface ppp0
```

Figure 21-3: Example output from **show running-config interface ppp0** to verify IPCP configuration:

```
!
interface ppp0
 ip address negotiated
!
```

**Related commands**

show ip interface

encapsulation ppp

peer default ip address

show running-config interface

# ip tcp adjust-mss

**Overview** Use this command to set the Maximum Segment Size (MSS) size for an interface, where MSS is the maximum TCP data packet size that the interface can transmit before fragmentation.

Use the **no** variant of this command to remove a previously specified MSS size for a PPP interface, and restore the default MSS size.

**Syntax**

```
ip tcp adjust-mss {<mss-size>|pmtu}
no ip tcp adjust-mss
```

| Parameter | Description |
|---|---|
| *<mss-size>* | <64-1460> Specifies the MSS size in bytes. |
| pmtu | Adjust TCP MSS automatically with respect to the MTU on the interface. |

**Default** The default setting allows a TCP server or a TCP client to set the MSS value for itself.

**Mode** Interface Configuration

**Usage notes** When a host initiates a TCP session with a server it negotiates the IP segment size by using the MSS option field in the TCP packet. The value of the MSS option field is determined by the Maximum Transmission Unit (MTU) configuration on the host.

You can set a feasible MSS value on the following interfaces:

- PPP
- Ethernet
- Tunnel
- VLAN

**Examples** To configure an MSS size of 1452 bytes on PPP interface ppp0, use the commands:

```
awplus# configure terminal
awplus(config)# interface ppp0
awplus(config-if)# ip tcp adjust-mss 1452
```

To configure an MSS size of 1452 bytes on Ethernet interface eth1, use the commands:

```
awplus# configure terminal
awplus(config)# interface eth1
awplus(config-if)# ip tcp adjust-mss 1452
```

To configure an MSS size of 1452 bytes on interface tunnel2, use the commands:

```
awplus# configure terminal
awplus(config)# interface tunnel2
awplus(config-if)# ip tcp adjust-mss 1452
```

To restore the MSS size to the default size on PPP interface ppp0, use the commands:

```
awplus# configure terminal
awplus(config)# interface ppp0
awplus(config-if)# no ip tcp adjust-mss
```

**Related commands**

mtu (PPP)

show interface

show interface (PPP)

show interface tunnel (GRE)

**Command changes**

Version 5.4.8-2.1: interface tunnel example added

# ip unnumbered

**Overview** Use this command to borrow an IP address from the specified interface, on an unnumbered PPP interface.

Use the **no** variant of this command to remove the borrowed IP address.

**Syntax**

```
ip unnumbered <interface_name>
no ip unnumbered
```

| Parameter | Description |
|---|---|
| *<interface_name>* | Name of the interface from which the IP address is to be borrowed. Valid interface types from which the IP address can be borrowed from are VLAN, ethernet, loopback and bridge. |

**Default** IP unnumbered is disabled by default.

**Mode** Interface Configuration for a PPP interface

**Usage notes** An unnumbered PPP interface can process IP packets without explicitly assigning an IP address. This is achieved by borrowing the primary IP address from the specified VLAN, ethernet, loopback or bridge interface.

**Examples** To borrow an IP address on unnumbered PPP from vlan2, use the following commands:

```
awplus# configure terminal
awplus(config)# interface vlan2
awplus(config-if)# ip address 6.6.6.6/24
awplus(config-if)# exit
awplus(config)# interface ppp0
awplus(config-if)# ip unnumbered vlan2
```

To remove the borrowed IP address, use the following commands:

```
awplus# configure terminal
awplus(config)# interface ppp0
awplus(config-if)# no ip unnumbered
```

To verify borrowed address is configured on PPP interface ppp0, use the following command:

```
awplus# show interface ppp0
```

Figure 21-4: Example output from a **show interface** ppp0 to verify PPP IP borrowing configuration:

```
awplus#show interface ppp0
Interface ppp0
  Link is UP, administrative state is UP
  Hardware is PPP
  Interface is unnumbered. Using IPv4 address of vlan2 (2.2.2.2)
  index 16778240 metric 1 mtu 1492
  <UP,POINT-TO-POINT,RUNNING,NOARP,MULTICAST>
  PPP is running over interface eth1
  LCP Opened IPCP Opened
  MRU(bytes): Local config 1492, Local negotiated 1492, Peer
negotiated 1492
  Magic number: Local config ON, Local negotiated ON, Peer
negotiated ON
  Authentication: Local config None, Local neg None, Peer neg CHAP
  IPv4 addresses: Local config 0.0.0.0
                  Local neg 2.2.2.2, Peer neg 1.1.1.1
  IPv6 Id Local config: 0000:0000:0000:0000
  PPPoE is using the default service
  SNMP link-status traps: Disabled
    input packets 2, bytes 20, dropped 0, multicast packets 0
    output packets 2, bytes 20, multicast packets 0 broadcast
packets 0
  Time since last state change: 0 days 00:00:13
```

**Related commands**

show ip interface

show interface tunnel (L2TPv3)

show running-config interface

# ipv6 tcp adjust-mss

**Overview** Use this command to set the IPv6 Maximum Segment Size (MSS) size for an interface, where MSS is the maximum TCP data packet size that the interface can transmit before fragmentation.

Use the **no** variant of this command to remove a previously specified MSS size for a PPP interface, and restore the default MSS size.

**Syntax**

```
ipv6 tcp adjust-mss {<mss-size>|pmtu}
no ipv6 tcp adjust-mss
```

| Parameter | Description |
|---|---|
| *<mss-size>* | <64-1460> Specifies the MSS size in bytes. |
| pmtu | Adjust TCP MSS automatically with respect to the MTU on the interface. |

**Default** The default setting allows a TCP server or a TCP client to set the MSS value for itself.

**Mode** Interface Configuration

**Usage notes** When a host initiates a TCP session with a server it negotiates the IP segment size by using the MSS option field in the TCP packet. The value of the MSS option field is determined by the Maximum Transmission Unit (MTU) configuration on the host.

You can set a feasible MSS value on the following interfaces:

- PPP
- Ethernet
- Tunnel
- VLAN

**Examples** To configure an IPv6 MSS size of 1452 bytes on PPP interface ppp0, use the commands:

```
awplus# configure terminal
awplus(config)# interface ppp0
awplus(config-if)# ipv6 tcp adjust-mss 1452
```

To configure an IPv6 MSS size of 1452 bytes on Ethernet interface eth1, use the commands:

```
awplus# configure terminal
awplus(config)# interface eth1
awplus(config-if)# ipv6 tcp adjust-mss 1452
```

To adjust IPv6 TCP MSS automatically with respect to the MTU on interface tunnel2, use the commands:

```
awplus# configure terminal
awplus(config)# interface tunnel2
awplus(config-if)# ipv6 tcp adjust-mss pmtu
```

To restore the MSS size to the default size on PPP interface ppp0, use the commands:

```
awplus# configure terminal
awplus(config)# interface ppp0
awplus(config-if)# no ipv6 tcp adjust-mss
```

**Related commands**

mtu (PPP)

show interface

show interface (PPP)

show interface tunnel (GRE)

**Command changes**

Version 5.4.8-2.1: interface tunnel example added

# keepalive (PPP)

**Overview** Use this command to enable LCP (Link Control Protocol) Echo keepalive request messages and change LCP echo parameters on a given PPP interface in Interface Configuration mode.

Use the **no** variant of this command to disable LCP Echo keepalive request messages on a given PPP interface in Interface Configuration mode. Note that disabling the sending of LCP Echo keepalive request messages does not stop a device responding to LCP Echo requests.

**Syntax**

```
keepalive [[interval <interval>] [attempts
<attempt-limit>]]no keepalive
```

| Parameter | Description |
|---|---|
| *<interval>* | Specify the interval in seconds in the range <1-600> seconds between LCP Echo keepalive request messages, for a PPP interface.<br>Default: 10 |
| *<attempt-limit>* | Specify the number of missing LCP Echo keepalive response messages, in the range <1-10> for a PPP interface, before the link is considered as being link down and link renegotiation starts to reestablish the link.<br>Default: 3 |

**Default** The sending of LCP Echo keepalive messages on a PPP interface is disabled by default. If no optional **interval** is specified then the default interval duration is configured to 10 seconds. If no optional **attempts** are specified then the default attempt limit is configured to 3 attempts.

**Mode** Interface Configuration for a PPP interface

**Example** To enable the device to send LCP Echo keepalive messages on the PPP interface ppp0with the default 10 second interval when no interval is specified and the default 3 attempts when no attempt is specified, enter the below commands:

```
awplus# configure terminal
awplus(config)# interface ppp0
awplus(config-if)# keepalive
```

To enable the device to send LCP Echo keepalive messages on the PPP interface ppp0 with double the default values for a 20 second interval and 6 attempts, enter the below commands:

```
awplus# configure terminal
awplus(config)# interface ppp0
awplus(config-if)# keepalive interval 20 attempts 6
```

To disable the device from sending LCP Echo keepalive messages on the PPP interface `ppp0`, enter the below commands:

```
awplus# configure terminal
awplus(config)# interface ppp0
awplus(config-if)# no keepalive
```

**Related commands**

show running-config interface

# mtu (PPP)

**Overview**

Use this command to set the Maximum Transmission Unit (MTU) size for a PPP interface, where MTU is the maximum packet size that PPP interfaces can transmit.

Use the **no** variant of this command to remove a previously specified MTU size for a PPP interface, and restore the default MTU size (1492 bytes) for PPP interfaces.

**Syntax**

```
mtu <mtu-size>
no mtu
```

| Parameter | Description |
|---|---|
| *<mtu-size>* | <68-1492> Specifies the Maximum Transmission Unit (MTU) size in bytes, where 1492 bytes is the default MTU size for a PPPoE interface and 1500 bytes for PPP via other lower layer interface types. This allows for the 8-byte PPPoE header that is added to make up the total of a 1582 byte packet that matches the default MTU size for the Ethernet link.. |

***NOTE:*** *For PPPoE the minimum MTU value is 128.*

**Default**

The default MTU size is 1492 bytes for PPPoE interfaces. The MTU should be greater than, or equal to, the MSS.

**Mode**

Interface Configuration for PPP interfaces.

**Usage notes**

If a router receives an IPv4 packet for another PPP interface with an MTU size smaller than the packet size, and if the packet has the ' **don't fragment**' bit set, then the switch will send an ICMP ' **destination unreachable**' (3) packet type and a ' **fragmentation needed and DF set**' (4) code back to the source.

See the ip tcp adjust-mss command to set the Maximum Segment Size (MSS) after first setting the MTU size.

**Examples**

To configure an MTU size of 1492 bytes on PPP interface ppp0, use the commands:

```
awplus# configure terminal
awplus(config)# interface ppp0
awplus(config-if)# mtu 1492
```

To restore the MTU size to the default MTU size of 1492 bytes on PPP interface ppp0, use the commands

```
awplus# configure terminal
awplus(config)# interface ppp0
awplus(config-if)# no mtu
```

**Related commands**

ip tcp adjust-mss

show interface (PPP)

# peer default ip address

**Overview** Use this command to set the default IP address assigned to the peer if required for a given PPP interface.

Use the optional **required** keyword with this command to specify that the peer must use this address for a given PPP interface, or drop the connection.

Use the **no** variant of this command to remove the previously specified peer default IP address for a given PPP interface.

**Syntax**

```
peer default ip address <default-ip-address> [required]
no peer default ip address
```

| Parameter | Description |
|---|---|
| *<default-ip-address>* | Specify the IPv4 address to be assigned to the peer upon request. |
| `required` | Optionally specify the peer to acknowledge the default IP address, which requires the peer to use the address or drop the connection. |

**Default** No default IP address is configured to be assigned to the peer.

**Mode** Interface Configuration for a PPP interface

**Examples** To configure the PPP interface `ppp0` to assign the IP address of `192.168.0.1` to its peer upon request, use the below commands:

```
awplus# configure terminal
awplus(config)# interface ppp0
awplus(config-if)# peer default ip address 192.168.0.1
```

To configure the PPP interface `ppp0` to have the default peer IP address of `192.168.0.1`, and be required to use it or drop the connection, use the below commands:

```
awplus# configure terminal
awplus(config)# interface ppp0
awplus(config-if)# peer default ip address 192.168.0.1
required
```

To remove the default peer IP address of `192.168.0.1` from the PPP interface `ppp0`, enter the below commands:

```
awplus# configure terminal
awplus(config)# interface ppp0
awplus(config-if)# no peer default ip address
```

To verify the required peer default IP address `192.168.0.1` is configured on PPP interface `ppp0`, use the following command:

```
awplus# show running-config interface ppp0
```

## Output

**Table 1:** Example output from the **show running-config interface** ppp0 command

```
awplus# show running-config interface ppp0
!
interface ppp0
 peer default ip address 192.168.0.1 required
!
```

## Related commands

ip address negotiated

show running-config interface

# peer neighbor-route

**Overview**

Use this command in Interface Configuration mode for a PPP interface to re-enable the creation of peer neighbor routes after the default behavior has been disabled.

Use the **no** form of this command in Interface Configuration mode for a PPP interface to disable the default behavior of creating a neighbor route for the peer.

**Syntax**

```
peer neighbor-route
no peer neighbor-route
```

**Default**

A 32-bit host route (with a /32 mask) is created to the peer address on a PPP interface after PPP IPCP negotiation finishes.

**Usage notes**

Use the **no** form of this command if the default behavior creates issues within your network. Use the show ip route command to validate the route behavior after issuing this command.

**Mode**

Interface Configuration for a PPP interface

**Examples**

To re-enable the default behavior for the PPP interface `ppp1`, where a 32-bit host route (with a /32 mask) is created to the peer address on a PPP interface after PPP IPCP negotiation finishes, enter the commands:

```
awplus# configure terminal
awplus(config)# interface ppp1
awplus(config-if)# peer neighbor-route
```

To disable the default behavior for the PPP interface `ppp0`, to prevent a 32-bit host route being added to the IP router table, enter the commands:

```
awplus# configure terminal
awplus(config)# interface ppp0
awplus(config-if)# no peer neighbor-route
```

**Related commands**

show interface (PPP)

show ip route

**Output**

Figure 21-5: Example validation output from the **show interface** and **show ip route** commands issued before and after the **no peer neighbor-route** command (see IPv4 address in **show interface** output and see connected routes **show ip route** output):

```
awplus#show interface ppp1
Interface ppp1
  Scope: both
  Link is UP, administrative state is UP
  Hardware is PPP
  IPv4 address 4.1.1.2/32 pointopoint 4.1.1.1
  index 16778241 metric 1 mtu 1460
  <UP,POINTOPOINT,RUNNING,NOARP,MULTICAST>
  VRF Binding: Not bound
  PPP is running over interface tunnel1
  LCP Opened IPCP Opened
  L2TP session ID is 59451
  SNMP link-status traps: Disabled
    input packets 5, bytes 66, dropped 0, multicast packets 0
    output packets 4, bytes 46, multicast packets 0 broadcast packets 0
  Time since last state change: 0 days 00:02:24
awplus#show ip route
Codes: C - connected, S - static, R - RIP, B - BGP
       O - OSPF, IA - OSPF inter area
       N1 - OSPF NSSA external type 1, N2 - OSPF NSSA external type 2
       E1 - OSPF external type 1, E2 - OSPF external type 2
       * - candidate default

C       4.1.1.1/32 is directly connected, ppp1
C       4.1.1.2/32 is directly connected, ppp1
C       192.168.10.0/24 is directly connected, vlan1
awplus#configure terminal
Enter configuration commands, one per line.  End with CNTL/Z.
awplus(config)#interface ppp1
awplus(config-if)#no peer neighbor-route
awplus(config-if)#exit
awplus(config)#exit
awplus#show interface ppp1
Interface ppp1
  Scope: both
  Link is UP, administrative state is UP
  Hardware is PPP
  IPv4 address 4.1.1.2/32
  index 16778241 metric 1 mtu 1460
  <UP,POINTOPOINT,RUNNING,NOARP,MULTICAST>
  VRF Binding: Not bound
  PPP is running over interface tunnel1
  LCP Opened IPCP Opened
  L2TP session ID is 6262
  SNMP link-status traps: Disabled
    input packets 5, bytes 66, dropped 0, multicast packets 0
    output packets 4, bytes 46, multicast packets 0 broadcast packets 0
  Time since last state change: 0 days 00:00:09
awplus#show ip route
Codes: C - connected, S - static, R - RIP, B - BGP
       O - OSPF, IA - OSPF inter area
       N1 - OSPF NSSA external type 1, N2 - OSPF NSSA external type 2
       E1 - OSPF external type 1, E2 - OSPF external type 2
       * - candidate default

C       4.1.1.2/32 is directly connected, ppp1
C       192.168.10.0/24 is directly connected, vlan1
```

# ppp authentication

**Overview** Use this command in Interface Configuration mode for a PPP interface to configure PAP (Password Authentication Protocol), CHAP (Challenge Authentication Protocol), or EAP (Extensible Authentication Protocol).

Use the **no** form of this command in Interface Configuration mode for a PPP interface to disable all PAP, CHAP, and EAP authentication for a specified PPP interface.

**Syntax**

```
ppp authentication {eap|chap|pap}
no ppp authentication
```

| Parameter | Description |
|---|---|
| eap | Specify this parameter to enable EAP on a PPP interface |
| chap | Specify this parameter to enable CHAP on a PPP interface. |
| pap | Specify this parameter to enable PAP on a PPP interface. |

**Default** There is no PPP authentication protocol defined or configured to a PPP interface by default.

**Mode** Interface Configuration for a PPP interface

**Examples** To enable PPP PAP authentication on the PPP interface ppp0, enter the commands:

```
awplus# configure terminal
awplus(config)# interface ppp0
awplus(config-if)# ppp authentication pap
```

To enable PPP CHAP authentication on the PPP interface ppp0, enter the commands:

```
awplus# configure terminal
awplus(config)# interface ppp0
awplus(config-if)# ppp authentication chap
```

To enable PPP EAP authentication on the PPP interface ppp0, enter the commands:

```
awplus# configure terminal
awplus(config)# interface ppp0
awplus(config-if)# ppp authentication eap
```

To attempt PPP EAP authentication, then fall back to PPP CHAP authentication if the attempt to enable PPP EAP authentication fails on the PPP interface `ppp0`, enter the commands:

```
awplus# configure terminal
awplus(config)# interface ppp0
awplus(config-if)# ppp authentication eap chap
```

To attempt PPP CHAP authentication, then fall back to PPP PAP authentication if the attempt to enable PPP CHAP authentication fails on the PPP interface `ppp0`, enter the commands:

```
awplus# configure terminal
awplus(config)# interface ppp0
awplus(config-if)# ppp authentication chap pap
```

To disable all PPP authentication on the PPP interface `ppp0`, enter the commands:

```
awplus# configure terminal
awplus(config)# interface ppp0
awplus(config-if)# no ppp authentication
```

**Related commands**

ppp authentication refuse

ppp hostname

ppp password

ppp username

# ppp authentication refuse

**Overview** Use this command in Interface Configuration mode for a PPP interface to refuse EAP, CHAP (Challenge Handshake Authentication Protocol) or PAP (Password Authentication Protocol) authentication from peers requesting it.

Use the **no** form of this command in Interface Configuration mode for a PPP interface to allow authentication from peers requesting it.

**Syntax**

```
ppp authentication refuse {eap|chap|pap}
no ppp authentication refuse
```

| Parameter | Description |
|---|---|
| eap | Use this parameter to specify the router will refuse LCP configuration requests containing the authentication protocol option with EAP received on this PPP interface. |
| chap | Use this parameter to specify the router will refuse LCP configuration requests containing the authentication protocol option with CHAP received on this PPP interface. |
| pap | Use this parameter to specify the router will refuse LCP configuration requests containing the authentication protocol option with PAP on this PPP interface. |

**Mode** Interface Configuration for a PPP interface

**Usage notes** This command specifies that EAP, CHAP or PAP authentication is disabled, so all requests by the peer for the user to authenticate using EAP, CHAP or PAP are refused.

**Examples** To refuse the use of PAP authentication if a peer requests PAP authentication, enter the commands:

```
awplus# configure terminal
awplus(config)# interface ppp0
awplus(config-if)# ppp authentication refuse pap
```

To refuse the use of CHAP authentication if a peer requests CHAP authentication, enter the commands:

```
awplus# configure terminal
awplus(config)# interface ppp0
awplus(config-if)# ppp authentication refuse chap
```

To refuse the use of EAP authentication if a peer requests EAP authentication, enter the commands:

```
awplus# configure terminal
awplus(config)# interface ppp0
awplus(config-if)# ppp authentication refuse eap
```

To allow the use of EAP, CHAP or PAP authentication if a peer requests EAP, CHAP or PAP authentication, enter the commands:

```
awplus# configure terminal
awplus(config)# interface ppp0
awplus(config-if)# no ppp authentication refuse
```

**Related commands**

ppp authentication

# ppp hostname

**Overview** Use this command in Interface Configuration mode for a PPP interface to configure a unique identifier for that PPP authenticator. This is used by the authenticator to fill the Name field in a CHAP challenge packet, or is used to fill the Server Name field in an EAP SRP-SHA1 (Subtype 1 Request) packet. The hostname sent with PPP packet exchanges is normally the hostname of the router, as configured with the hostname command.

Use the **no** form of this command in Interface Configuration mode for a PPP interface to disable a configured alternate hostname and revert to using the hostname, as configured with the hostname command.

See the Usage section below for information about when you may want to specify another hostname, instead of the system hostname configured from the hostname command, using this command.

**Syntax**

```
ppp hostname <hostname>
no ppp hostname <hostname>
```

| Parameter | Description |
|---|---|
| *<hostname>* | Specify this parameter to use an alternate hostname for PPP EAP and CHAP authentication instead of the hostname specified by the hostname command. The name can contain up to 255 characters. The name can contain any printable ASCII characters (ASCII 32-126). If the name contains the special characters backslash, double-quote or space, those characters should be escaped with a backslash. |

**Default** The default PPP hostname is the system hostname as specified with the hostname command.

**Mode** Interface Configuration for a PPP interface

**Usage notes** This command allows the PPP username that is sent to be independent of the router hostname for a specific PPP interface.

**Examples** To enable the use of the alternate hostname `remote_router` for PPP authentication, enter the commands:

```
awplus# configure terminal
awplus(config)# interface ppp0
awplus(config-if)# ppp hostname remote_router
```

To disable the use of the alternate hostname `remote_router` for PPP authentication, enter the commands:

```
awplus# configure terminal
awplus(config)# interface ppp0
awplus(config-if)# no ppp hostname remote_router
```

**Related commands**

hostname

ppp authentication

# ppp ipcp dns

**Overview** Use this command to configure the primary and secondary DNS (Domain Name System) IP addresses for IPCP (Internet Protocol Control Protocol) on a given PPP interface.

Use the **no** variant of this command to remove the primary and secondary DNS IP addresses for IPCP on a given PPP interface, and remove any optional parameters configured for DNS.

**Syntax**

```
ppp ipcp dns [<primary> [<secondary>]][required|reject|request]
no ppp ipcp dns
```

| Parameter | Description |
|---|---|
| *<primary>* | Specify the primary DNS address for a given PPP interface to the peer. |
| *<secondary>* | Specify the secondary DNS address for a given PPP interface to the peer. |
| `required` | Request DNS addresses from the peer, and close the link if none is given. |
| `reject` | Reject negotiations with the peer (default). |
| `request` | Request DNS addresses from the peer. |

**Default** By default no IPCP DNS server request is sent to the peer.

**Mode** Interface Configuration

**Usage notes** Use the optional parameters to configure PPP IPCP DNS options for accepting, rejecting or requesting DNS addresses from the peer. Use the optional primary and secondary or primary only DNS server address placeholders to specify DNS server addresses to the peer.

The no variant of this command also stops IPCP DNS request messages being sent to the peer.

**Examples** To configure the PPP interface `ppp0` to require a DNS IP address from the peer, and close the link if a DNS IP address is not given, enter the below commands:

```
awplus# configure terminal
awplus(config)# interface ppp0
awplus(config-if)# ppp ipcp dns required
```

To configure the PPP interface `ppp0` to require a DNS IP address from the peer, enter the below commands:

```
awplus# configure terminal
awplus(config)# interface ppp0
awplus(config-if)# ppp ipcp dns request
```

To configure the PPP interface `ppp0` to reject a DNS IP address from the peer, enter the below commands:

```
awplus# configure terminal
awplus(config)# interface ppp0
awplus(config-if)# ppp ipcp dns reject
```

To configure the PPP interface `ppp0` to supply primary and secondary DNS server addresses to the peer, enter the below commands:

```
awplus# configure terminal
awplus(config)# interface ppp0
awplus(config-if)# ppp ipcp dns 10.1.1.2 10.1.1.3
```

To configure the PPP interface `ppp0` to supply a primary but not a secondary DNS server address to the peer, enter the below commands:

```
awplus# configure terminal
awplus(config)# interface ppp0
awplus(config-if)# ppp ipcp dns 10.1.1.2
```

**Related commands**

ip address negotiated

peer default ip address

peer neighbor-route

show running-config interface

# ppp ipcp dns suffix-list

**Overview** Use this command to configure a suffix-list to be associated with DNS name-servers learned over the PPP connection.

Use the **no** variant of this command to remove the suffix-list.

**Syntax**

```
ppp ipcp dns suffix-list <domain-list-name>
no ppp ipcp dns suffix-list
```

| Parameter | Description |
|---|---|
| *<domain-list-name>* | The name of the DNS domain-list |

**Mode** Interface Configuration

**Usage notes** A PPP connection can be configured to learn DNS servers from the remote peer by using the command ppp ipcp dns command.

This command allows a user to associate a domain-list to be used to match against the suffixes of incoming DNS requests. For example, a customer branch office may have a router that is used to give remote-access to their head office, over which they learn the IP address of the head office's DNS server. A domain list can be created that contains a suffix used for services internal to that company, for example, "example.lc". This domain-list is associated as a suffix-list to the PPP connection. So when the PPP connection is completed with the head office, users at the branch office that browse to "intranet.example.lc" will have the DNS request forwarded to the DNS server learned over the PPP connection. Without having the suffix-list configured, the DNS request for "intranet.example.lc" would instead be sent to the primary DNS server, which is likely to be the branch office's ISP, and they will simply respond with a negative reply, because .example.lc is not a globally routable domain.

**Examples** At a branch office, to direct DNS lookups for domains with suffixes of "engineering.acme" or "intranet.acme" to an internal corporate name-server run at head-office that was learned over a PPP connection, use the commands:

```
awplus# configure terminal
awplus(config)# ip dns forwarding domain-list corporatedomains
host(config-domain-list)# description Our internal network
domains; do not send DNS requests to internet
host(config-domain-list)# domain engineering.acme
host(config-domain-list)# domain intranet.acme
awplus(config)# interface ppp0
awplus(config-if)# ppp ipcp dns required
awplus(config-if)# ppp ipcp dns suffix-list corporatedomains
```

**Related commands**

ip dns forwarding domain-list

ppp ipcp dns

# ppp ipcp ip-override

**Overview** Use this command to override the IP address negotiated via IPCP with peer and use the statically configured address on a given PPP interface.

Use the **no** variant of this command to use any address negotiated with the peer via IPCP on a given PPP interface.

**Syntax**

```
ppp ipcp ip-override
no ppp ipcp ip-override
```

**Default** By default the address is negotiated with the peer via IPCP.

**Mode** Interface Configuration

**Examples** To override the IP address negotiated with the peer via IPCP and use statically configured address on interface ppp0, use the commands below:

```
awplus# configure terminal
awplus(config)# interface ppp0
awplus(config-if)# ip address 192.168.1.100/24
awplus(config-if)# ppp ipcp ip-override
```

**Related commands** show running-config interface

# ppp password

**Overview**

Use this command in Interface Configuration mode for a PPP interface to configure a PPP secret password to be used in response to a challenge from an unknown remote peer.

Use the **no** form of this command in Interface Configuration mode for a PPP interface to disable a configured PPP secret password.

**Syntax**

```
ppp password <password>
no ppp password
```

| Parameter | Description |
|---|---|
| *<password>* | Specify this parameter to configure a PPP secret password to be used in response to an unknown remote peer. You can use any printable characters, including spaces. A password can contain up to 255 printable characters. |

**Default**

There is no PPP password defined or configured to a PPP interface by default.

**Mode**

Interface Configuration for a PPP interface

**Examples**

To enable the use of the PPP secret password `bobs_secret` for PPP authentication, enter the commands:

```
awplus# configure terminal
awplus(config)# interface ppp0
awplus(config-if)# ppp password bobs_secret
```

To disable the use of the PPP secret password `bobs_secret` for PPP authentication, enter the commands:

```
awplus# configure terminal
awplus(config)# interface ppp0
awplus(config-if)# no ppp password
```

**Related commands**

ppp authentication

ppp username

# ppp service-name (PPPoE)

**Overview**

This command configures the PPPoE service name used to select a service from an access concentrator. This can only be applied when the PPP interface has been configured over an underlying eth interface.

Use the **no** variant of this command to set the service name for the connection back to the default (unset).

**Syntax**

```
ppp service-name <service-name>
no ppp service-name
```

| Parameter | Description |
|---|---|
| *<service-name>* | Specifies the PPPoE service name to select from an access concentrator. The service-name is 1 to 18 characters long, is case-sensitive, and for a PPPoE client is usually supplied by the ISP.<br>The name can contain any printable ASCII characters (ASCII 32-126). If the name contains the special characters backslash, double-quote or space, those characters should be escaped with a backslash.<br>The default is no service name. |

**Default**

The default option is not to specify a service name. This results in a connection to the default service specified by the access concentrator.

**Mode**

Interface Configuration for a PPP interface

**Usage notes**

You can only apply a single service name to each PPPoE interface.

**Examples**

To connect to a service called “Internet”, use the command:

```
awplus(config)# interface ppp0
awplus(config-if)# ppp service-name Internet
```

**Related commands**

encapsulation ppp

show interface (PPP)

# ppp timeout idle

**Overview** Use this command to specify an idle time when a PPP connection is disconnected.

Use the **no** variant of this command to reset the idle time to the default of 60 seconds.

**Syntax**

```
ppp timeout idle <0-99999>
no ppp timeout idle
```

| Parameter | Description |
|---|---|
| *<0-99999>* | The time in seconds before the idle timeout disconnects. If this is not specified the default value of 60 seconds is used. |

**Default** PPP timeout idle is not set and the PPP Dial on Demand feature is disabled. If no idle time is set, the default value of 60 seconds is used.

**Mode** Interface Configuration

**Usage notes** This command allows an idle timer to disconnect a PPP connection after a specified time. The timer is reset upon either ingress or regress user traffic. Non-user traffic such as Link Control Protocol (LCP) keepalives and Network Control Protocol (NCP) negotiation packets do not reset the idle timer.

**Examples** To set the idle time to 30 seconds, enter the below commands:

```
awplus# configure terminal
awplus(config)# interface ppp0
awplus(config-if)# ppp timeout idle
30
```

To disable the use of the timer and disable the PPP Dial on Demand feature, enter the below commands:

```
awplus# configure terminal
awplus(config)# interface ppp0
awplus(config-if)# no ppp timeout
idle 30
```

**Validation Commands** show running-config interface

# ppp username

**Overview** This command creates or modifies a username for a PPP user on a configured PPP interface.

**Syntax**

```
ppp username <username>
no ppp username
```

| Parameter | Description |
|---|---|
| *<username>* | Specify a login name for the user. The name can contain up to 255 characters.<br>The name can contain any printable ASCII characters (ASCII 32-126). If the name contains the special characters backslash, double-quote or space, those characters should be escaped with a backslash. |

**Default** There is no default PPP username defined or configured to a PPP interface.

**Mode** Interface Configuration for a PPP interface.

**Examples** To create the PPP username bob, for the PPP interface ppp0, use the commands:

```
awplus# configure terminal
awplus(config)# interface ppp0
awplus(config-if)# ppp username bob
```

To remove the PPP username bob, for the PPP interface ppp0, use the commands:

```
awplus# configure terminal
awplus(config)# interface ppp0
awplus(config-if)# no ppp username
```

**Related commands** ppp authentication

ppp password

# show debugging ppp

**Overview** Use this command to display PPP debug settings for optionally specified PPP interfaces. If no PPP interfaces are specified then PPP debug settings are shown for all available PPP interfaces.

**Syntax**

```
show debugging ppp [interface <0-255>]
```

| Parameter | Description |
|---|---|
| *<0-255>* | Specify a PPP interface or a range of PPP interfaces in the range ppp<0-255>. Use a hyphen between PPP interfaces to include all PPP interfaces in a given range, or use commas between PPP interfaces to specify non-contiguous PPP interfaces. |

**Mode** Privileged Exec

**Examples** The following example shows how to display PPP debug information for PPP interface ppp0:

```
awplus# show debugging ppp interface ppp0
```

The following example shows how to display PPP debug information for PPP interface ppp0 through ppp2:

```
awplus# show debugging ppp interface ppp0-ppp2
```

The following example shows how to display PPP debug information for PPP interface ppp0 and ppp2:

```
awplus# show debugging ppp interface ppp0,ppp2
```

The following example shows how to display PPP debug information for all available PPP interfaces:

```
awplus# show debugging ppp
```

Figure 21-6: Example output from the **show debugging ppp** command

```
awplus# show debugging ppp
PPP debugging status:
  PPP debug on interface ppp0: enabled
  PPP debug on interface ppp1: disabled
```

**Related commands**

debug ppp

no debug all

undebug all

show interface (PPP)

# show interface (PPP)

**Overview** Use this command to display configuration and status information for a configured PPP (Point-to-Point) interface.

**Syntax** `show interface ppp<ppp_index>`

| Parameter | Description |
|---|---|
| *<ppp_index>* | Display configuration and status information for the specified and configured PPP interface (0 to 255). |

**Mode** User Exec and Privileged Exec

**Usage notes** See the show interface brief command for brief interface, configuration and status information.

Note the negotiated options, including those for DNS addresses, are shown in console output:

- `Local DNS addresses` as displayed in console output are provided from the peer.
- `Peer DNS addresses` as displayed in console output are provided to the peer.
- Only `Peer DNS addresses` or `Local DNS addresses` are shown, but not both.
- `Echo Request Timer` value as displayed in console output is the local setting.

**Example** The following example shows how to display the configuration and status information for a configured PPP interface named `ppp0`.

```
awplus# show interface ppp0
```

Figure 21-7: Example output from the **show interface** command for a PPPoE interface

```
awplus#show interface ppp0

Interface ppp0
  Scope: both
  Link is UP, administrative state is UP
  Hardware is PPP
  IPv4 address 10.1.0.2/32
  IPv6 address fe80::200:cdff:fe28:8a1/10
  index 16778440 metric 1
  <UP,POINTOPOINT,RUNNING,NOARP,MULTICAST>
  VRF Binding: Not bound
  PPP is running over interface eth0
  PPPoE is using the default service
  SNMP link-status traps: Disabled
   input packets 12, bytes 458, dropped 0, multicast packets 0
   output packets 6, bytes 122, multicast packets 0 broadcast
packets 0
  Time since last state change: 0 days 00:01:57
```

Figure 21-8: Example output from the **show interface ppp1** command showing negotiated DNS addresses, where the peer provided the DNS information (see the **Local DNS addresses** field output below):

```
awplus#sh interface ppp1
Interface ppp1
  Scope: both
  Link is UP, administrative state is UP
  Hardware is PPP
  IPv4 address 192.168.1.1/30 pointopoint 192.168.1.2
  IPv6 address fe80::200:cdff:fe28:89f/10
  index 16778241 metric 1 mtu 1460
  <UP,POINTOPOINT,RUNNING,NOARP,MULTICAST>
  VRF Binding: Not bound
  PPP is running over interface tunnel1
  LCP Opened IPCP Opened IPV6CP Opened
  MRU(bytes): Local config 1460, Local negotiated 1460, Peer
negotiated 1460
  Magic number: Local config ON, Local negotiated ON, Peer
negotiated ON
  Authentication: Local config None, Local neg None, Peer neg None
  Echo Request Timer (seconds): 10
  IPv4 addresses: Local config 192.168.1.1, Peer neg 192.168.1.2
  IPv6 interface ID: Local eecd:6dff:fe3a:0d18, Peer neg
eecd:6dff:fe3a:0d18
  Local DNS addresses: 192.168.60.1, 192.168.60.2
  L2TP session ID is 15288
  SNMP link-status traps: Disabled
    input packets 5, bytes 96, dropped 0, multicast packets 0
    output packets 5, bytes 96, multicast packets 0 broadcast
packets 0
  Time since last state change: 0 days 00:06:29
awplus#
```

Figure 21-9: Example output from the **show interface ppp1** command showing negotiated DNS addresses, where the peer was provided with DNS information (see the **Peer DNS addresses** field output below):

```
awplus#sh interface ppp1
Interface ppp1
  Scope: both
  Link is UP, administrative state is UP
  Hardware is PPP
  IPv4 address 192.168.1.1/30 pointopoint 192.168.1.2
  IPv6 address fe80::200:cdff:fe28:89f/10
  index 16778241 metric 1 mtu 1460
  <UP,POINTOPOINT,RUNNING,NOARP,MULTICAST>
  VRF Binding: Not bound
  PPP is running over interface tunnel1
  LCP Opened IPCP Opened IPV6CP Opened
  MRU(bytes): Local config 1460, Local negotiated 1460, Peer
negotiated 1460
  Magic number: Local config ON, Local negotiated ON, Peer
negotiated ON
  Authentication: Local config None, Local neg None, Peer neg None
  Echo Request Timer (seconds): 10
  IPv4 addresses: Local config 192.168.1.1, Peer neg 192.168.1.2
  IPv6 interface ID: Local eecd:6dff:fe3a:0d18, Peer neg
eecd:6dff:fe3a:0d18
  Peer DNS addresses: 1.1.1.1, 2.2.2.2
  L2TP session ID is 15288
  SNMP link-status traps: Disabled
    input packets 5, bytes 96, dropped 0, multicast packets 0
    output packets 5, bytes 96, multicast packets 0 broadcast
packets 0
  Time since last state change: 0 days 00:06:29
awplus#
```

**Related commands**

encapsulation ppp

ppp service-name (PPPoE)

show interface

show interface brief

# undebug ppp

**Overview**

Use this command to disable PPP protocol debugging on the specified PPP interface or interfaces. If no PPP interface is specified then PPP debugging for all PPP interfaces is disabled.

This command has the same functionality as the **no** variant of the debug ppp command.

**Syntax**

```
undebug ppp [interface <ppp-interface-list>]
```

| Parameter | Description |
|---|---|
| *<ppp-interface-list>* | Specify a PPP interface or a range of PPP interfaces in the range ppp<0-255>. Use a hyphen between PPP interfaces to include all PPP interfaces in a given range, or use commas between PPP interfaces to specify non-contiguous PPP interfaces. |

**Default**

No diagnostic messages are enabled for PPP debugging. PPP debugging is disabled by default.

**Mode**

Privileged Exec

**Usage notes**

Note that this command is an alias of the negated form of the debug ppp command.

**Examples**

To disable PPP debugging for all PPP interfaces, enter the below command:

```
awplus# undebug ppp
```

To disable PPP debugging for PPP interfaces ppp0, enter the below command:

```
awplus# undebug ppp interface ppp0
```

To disable PPP debugging for PPP interfaces ppp0 through ppp2, enter the below command:

```
awplus# undebug ppp interface ppp0-ppp2
```

To disable PPP debugging for PPP interfaces ppp0 and ppp2, enter the below command:

```
awplus# undebug ppp interface ppp0,ppp2
```

**Related commands**

debug ppp

no debug all

show debugging ppp

undebug all

# 22 PPP over Ethernet (PPPoE) Commands

## Introduction

**Overview**

This chapter provides an alphabetical reference of commands used to configure Point to Point Protocol over Ethernet (PPPoE) related features. This includes PPPoE Client, PPPoE Access Concentrator, and PPPoE Relay.

For more information, see the PPP Feature Overview and Configuration Guide and the L2TPv2 Tunneling of PPP Feature Overview and Configuration Guide.

**Command List**


- "clear pppoe-ac statistics" on page 717
- "client (pppoe-relay)" on page 718
- "debug pppoe-ac" on page 719
- "destination l2tp" on page 720
- "l2tp peer-address dns-lookup" on page 721
- "l2tp peer-address radius-lookup group" on page 723
- "l2tp peer-address static" on page 724
- "l2tp profile" on page 726
- "max-sessions" on page 728
- "ppp-auth-protocol" on page 729
- "pppoe-ac" on page 730
- "pppoe-ac-service" on page 731
- "pppoe-relay" on page 732
- "proxy-auth" on page 733
- "server (pppoe-relay)" on page 734
- "service-name" on page 735
- "show debugging pppoe ac" on page 737
- "show pppoe-ac config-check" on page 738

- "show pppoe-ac connections" on page 740
- "show pppoe-ac statistics" on page 742
- "show running-config pppoe-ac" on page 745
- "show running-config pppoe-relay" on page 746
- "timeout (pppoe-relay)" on page 747

# clear pppoe-ac statistics

**Overview** Use this command to zero all the PPPoE Access Concentrator statistics counters, and restart the counters incrementing from zero.

To see the affected counter values, use the command show pppoe-ac statistics.

**Syntax**

```
clear pppoe-ac statistics
```

**Default** n/a

**Mode** Privileged Exec

**Example** To set all the PPPoE Access Concentrator statistics counters to zero, use the command:

```
awplus# clear pppoe-ac statistics
```

**Related commands** show pppoe-ac statistics

# client (pppoe-relay)

**Overview**

Use this command to configure a PPPoE relay client interface.

Use the **no** variant of this command to remove a PPPoE relay client interface.

**Syntax**

```
client <client-interface>
no client <client-interface>
```

| Parameter | Description |
|---|---|
| *<client-interface>* | The PPPoE relay client interface.<br>The valid interface types are: eth and vlan. |

**Default**

None.

**Mode**

PPPoE Relay Configuration

**Example**

To configure eth1 as the client interface on PPPoE relay instance 'Telco1', use the commands:

```
awplus# pppoe-relay Telco1
awplus(config-pppoe-relay)# client eth1
```

To remove the eth1 client interface configured on PPPoE relay instance 'Telco1', use the commands:

```
awplus# pppoe-relay Telco1
awplus(config-pppoe-relay)# no client eth1
```

**Related commands**

server (pppoe-relay)

timeout (pppoe-relay)

max-sessions

pppoe-relay

show running-config pppoe-relay

**Command changes**

Version 5.5.0-1.3: command added

# debug pppoe-ac

**Overview** Use this command to enable debugging of the PPPoE Access Concentrator.

Use the **no** variant of this command to disable debugging of the PPPoE Access Concentrator.

**Syntax**

```
debug pppoe-ac
no debug pppoe-ac
```

| Parameter | Description |
|---|---|
| *<varname>* | Description of varname |

**Default** PPPoE Access Concentrator debugging is disabled by default.

**Mode** Privileged Exec

**Example** To enable PPPoE AC debugging, use the commands:

```
awplus# debug pppoe-ac
awplus# terminal monitor
% Warning: Console logging enabled
```

**Related commands**

debug l2tp

show debugging pppoe ac

# destination l2tp

**Overview**

Use this command to set the destination to forward all PPPoE packets to the peer over L2TP.

Use the **no** variant of this command to unset the destination for PPPoE packets.

**Syntax**

```
destination l2tp
no destination
```

**Default**

This command is not configured by default.

**Mode**

PPPoE Access Concentrator Configuration

**Example**

To sets the destination to forward all PPPoE packets for the service 'ISP-service' to the peer over L2TP, use the commands:

```
awplus# configure terminal
awplus(config)# pppoe-ac ISP-service
awplus(config-pppoe-ac)# destination l2tp
```

To unset the destination for PPPoE packets for the service 'ISP-service', use the commands:

```
awplus# configure terminal
awplus(config)# pppoe-ac ISP-service
awplus(config-pppoe-ac)# no destination
```

**Related commands**

l2tp peer-address dns-lookup

l2tp peer-address radius-lookup group

l2tp peer-address static

l2tp profile

pppoe-ac

ppp-auth-protocol

service-name

show running-config pppoe-ac

# l2tp peer-address dns-lookup

**Overview** Use this command to set the LNS address to use via a DNS lookup from the username email domain for this PPPoE Access Concentrator service.

Use the **no** variant of this command to remove the DNS lookup setting for this PPPoE AC service.

**Syntax**

```
l2tp peer-address dns-lookup [prefix <prefix>|]
no l2tp peer-address
```

| Parameter | Description |
|---|---|
| *<prefix>* | A string to prepend to the domain name portion of the username. |

**Default** This command is not set by default.

**Mode** PPPoE Access Concentrator Configuration

**Example** To set the LNS address to use via a DNS lookup for the PPPoE AC service 'ISP-service', use the commands:

```
awplus# configure terminal
awplus(config)# pppoe-ac ISP-service
awplus(config-pppoe-ac)# l2tp peer-address dns-lookup
```

To set the LNS address to use via a DNS lookup and prepend "lns" to the domain name portion of the username, use the commands:

```
awplus# configure terminal
awplus(config)# pppoe-ac ISP-service
awplus(config-pppoe-ac)# l2tp peer-address dns-lookup prefix
lns
```

To remove the DNS lookup setting for the PPPoE AC service 'ISP-service', use the commands:

```
awplus# configure terminal
awplus(config)# pppoe-ac ISP-service
awplus(config-pppoe-ac)# no l2tp peer-address
```

**Related commands**

destination l2tp

l2tp peer-address radius-lookup group

l2tp peer-address static

l2tp profile

pppoe-ac

ppp-auth-protocol

service-name

show running-config pppoe-ac

# l2tp peer-address radius-lookup group

**Overview** Use this command to set this PPPoE Access Concentrator (AC) service to get the LNS address by a RADIUS lookup.

Use the **no** variant of this command to remove the L2TP peer address setting.

**Syntax**

```
l2tp peer-address radius-lookup group <radius-group-name>
no l2tp peer-address
```

| Parameter | Description |
|---|---|
| *<radius-group-name>* | The name of the RADIUS group to lookup. |

**Default** No L2TP peer address is set by default.

**Mode** PPPoE Access Concentrator Configuration

**Example** To find peer address via RADIUS lookup from Radius server group called "GROUP1", use the commands:

```
awplus# configure terminal
awplus(config)# pppoe-ac ISP-service
awplus(config-pppoe-ac)# l2tp peer-address radius-lookup group
GROUP1
```

To remove the RADIUS lookup setting for the PPPoE AC service 'ISP-service', use the commands:

```
awplus# configure terminal
awplus(config)# pppoe-ac ISP-service
awplus(config-pppoe-ac)# no l2tp peer-address
```

**Related commands**

aaa group server

destination l2tp

l2tp peer-address dns-lookup

l2tp peer-address static

l2tp profile

pppoe-ac

ppp-auth-protocol

service-name

show running-config pppoe-ac

# l2tp peer-address static

**Overview** Use this command to set the IP address or fully qualified domain name of the L2TP peer (LNS) to which the L2TP tunnel should be established for this PPPoE Access Concentrator route.

Use the **no** variant of this command to remove the configured L2TP peer (LNS) address.

**Syntax**

```
l2tp peer-address static
{<l2tp-peer-ip-address>|<l2tp-peer-domain-name>}
```

```
no l2tp peer-address
```

| Parameter | Description |
|---|---|
| *<l2tp-peer-ip-address>* | The IPv4 address of the L2TP peer (LNS) for this PPPoE AC route, in dotted-decimal format. |
| *<l2tp-peer-domain-name>* | The fully-qualified domain name of the L2TP peer (LNS) for this PPPoE AC route. |

**Default** No L2TP peer address is configured by default.

**Mode** PPPoe Access Concentrator Configuration

**Example** To configure L2TP to tunnel all users to the LNS located at IP address 192.168.11.2, use the commands:

```
awplus# configure terminal
awplus(config)# pppoe-ac ISP-service
awplus(cinfig-pppoe-ac)# l2tp peer-address static 192.168.11.2
```

To configure L2TP to tunnel all users to the LNS located at domain foo.mydomain.org, use the commands:

```
awplus# configure terminal
awplus(config)# pppoe-ac ISP-service
awplus(config-pppoe-ac)# l2tp peer-address static
foo.mydomain.org
```

To remove the configured peer (LNS) address, use the commands:

```
awplus# configure terminal
awplus(config)# pppoe-ac ISP-service
awplus(cinfig-pppoe-ac)# no l2tp peer-address
```

**Related commands**

destination l2tp

l2tp peer-address dns-lookup

l2tp peer-address radius-lookup group

l2tp profile

ppp-auth-protocol

service-name

show running-config pppoe-ac

# l2tp profile

**Overview** Use this command to set the profile to use for L2TP traffic for this PPPoE Access Concentrator (AC).

Use the **no** variant of this command to remove L2TP profile setting from this PPPoE AC.

**Syntax**

```
l2tp profile <l2tp-profile-name>
no l2tp profile <l2tp-profile-name>
```

| Parameter | Description |
|---|---|
| *<l2tp-profile-name>* | The name of the L2TP profile that the PPPoE AC is to use. to use. |

**Default** This command is not configured by default.

**Mode** PPPoE Access Concentrator Configuration

**Usage** The L2TP profile name used in this command is created by the **l2tp-profile** command.

**Example** To allow AC service "ISP-service" to use the L2TP profile called "PUBLIC", use the commands:

```
awplus# configure terminal
awplus(config)# pppoe-ac ISP-service
awplus(config-pppoe-ac)# l2tp profile PUBLIC
```

To unset the L2TP profile for the AC service "ISP-service", use the commands:

```
awplus# configure terminal
awplus(config)# pppoe-ac ISP-service
awplus(config-pppoe-ac)# no l2tp profile PUBLIC
```

**Related commands**

destination l2tp

l2tp-profile

l2tp peer-address dns-lookup

l2tp peer-address radius-lookup group

l2tp peer-address static

l2tp-profile

pppoe-ac

ppp-auth-protocol

service-name

## show running-config pppoe-ac

# max-sessions

**Overview** Use this command to configure the maximum concurrent sessions for a PPPoE relay instance.

Use the **no** variant of this command to set a PPPoE relay maximum concurrent sessions to the default value.

**Syntax**

```
max-sessions <1-65534>
no max-sessions
```

| Parameter | Description |
|---|---|
| *<1-65534>* | The maximum number of concurrent sessions per PPPoE relay instance. |

**Default** 5000

**Mode** PPPoE Relay Configuration

**Example** To set the PPPoE relay maximum concurrent sessions to 50, use the commands:

```
awplus# configure terminal
awplus(config)# pppoe-relay Telco1
awplus(config-pppoe-relay)# max-sessions 50
```

To set the PPPoE relay maximum concurrent sessions to the default, use the commands:

```
awplus# configure terminal
awplus(config)# pppoe-relay Telco1
awplus(config-pppoe-relay)# no max-sessions
```

**Related commands**

client (pppoe-relay)

server (pppoe-relay)

timeout (pppoe-relay)

pppoe-relay

show running-config pppoe-relay

**Command changes** Version 5.5.0-1.3: command added

# ppp-auth-protocol

**Overview** Use this command to set the authentication protocol to be used for this PPPoE Access Concentrator (AC) service.

Use the **no** variant of this command to reset the authentication protocol to the default.

**Syntax**

```
ppp-auth-protocol {chap|pap|eap}
no ppp-auth-protocol
```

| Parameter | Description |
|---|---|
| chap | Set the PPP authentication protocol to Challenge Handshake Authentication Protocol (default). |
| pap | Set the PPP authentication protocol to Password Authentication Protocol. |
| eap | Set the PPP authentication protocol to Extensible Authentication Protocol. |

**Default** Default PPP authentication protocol is CHAP.

**Mode** PPPoE Access Concentrator Configuration

**Example** To set PPP authentication for the PPPoE AC service 'ISP-service' to use PAP, use the commands:

```
awplus# configure terminal
awplus(config)# pppoe-ac ISP-service
awplus(config-pppoe-ac)# ppp-auth-protocol pap
```

To set PPP authentication to use the default (CHAP), use the commands:

```
awplus# configure terminal
awplus(config)# pppoe-ac ISP-service
awplus(config-pppoe-ac)# no ppp-auth-protocol
```

**Related commands**

destination l2tp

l2tp peer-address dns-lookup

l2tp peer-address radius-lookup group

l2tp peer-address static

l2tp profile

pppoe-ac

service-name

show running-config pppoe-ac

# pppoe-ac

**Overview** Use this command to create a PPPoE Access Concentrator (AC) and put the device into PPPoE Access Concentrator Configuration mode, in which subsequent commands can be entered.

Use the **no** variant of this command to remove the PPPoE AC and all its configuration.

**Syntax**

```
pppoe-ac <label>
no pppoe-ac <label>
```

| Parameter | Description |
|---|---|
| *<label>* | A unique label for the PPPoE AC service. |

**Default** No PPPoE AC services are configured by default.

**Mode** Global Configuration

**Example** To configure a PPPoE AC called "ISP-service", use the commands:

```
awplus# configure terminal
awplus(config)# pppoe-ac ISP-service
awplus(config-pppoe-ac)#
```

To remove a PPPoE AC called "ISP-service" and its configuration, use the commands:

```
awplus# configure terminal
awplus(config)# no pppoe-ac ISP-service
```

**Related commands**

destination l2tp

l2tp peer-address dns-lookup

l2tp peer-address radius-lookup group

l2tp peer-address static

l2tp profile

pppoe-ac

ppp-auth-protocol

pppoe-ac-service

service-name

show running-config pppoe-ac

# pppoe-ac-service

**Overview** Use this command to attach the specified PPPoE Access Concentrator (AC) service to the interface. An AC service can be offered on several interfaces. Up to six PPPoE AC services can be set for one interface. Only ETH and VLAN interfaces accept this command.

Use the **no** variant of this command to remove the AC service from the interface.

**Syntax**

```
pppoe-ac-service <label>
no pppoe-ac-service <label>
```

| Parameter | Description |
|---|---|
| *<label>* | The name (label) of the PPPoE AC service to be attached to the interface. |

**Default** No PPPoE AC service is attached to an interface by default.

**Mode** Interface Configuration

**Usage notes** The label of the PPPoE AC service specified in this command is created by the **pppoe-ac** command.

**Example** To provide a PPPoE AC service labeled 'ISP-service' for client requests received on interface eth1, use the commands:

```
awplus# configure terminal
awplus(config)# interface eth1
awplus(config-if)# pppoe-ac-service ISP-service
```

To remove the PPPoE AC service 'isp1' from interface eth1, use the commands:

```
awplus# configure terminal
awplus(config)# interface eth1
awplus(config-if)# no pppoe-ac-service isp1
```

**Related commands** pppoe-ac

# pppoe-relay

**Overview**

Use this command to create a PPPoE relay instance and put the device into PPPoE Relay Configuration mode, in which subsequent commands can be entered.

Use the **no** variant of this command to remove the PPPoE relay instance and all its configuration.

**Syntax**

```
pppoe-relay <relay-name>
no pppoe-relay <relay-name>
```

| Parameter | Description |
|---|---|
| *<relay-name>* | Name of the PPPoE relay instance |

**Default**

None.

**Mode**

Global Configuration

**Usage notes**

PPPoE relay tracks state information for multiple Layer 2 PPPoE sessions, and allows multiple PPPoE client connections to be relayed between one or more client LANs and a WAN.

This allows the PPPoE client connections to have access to one or more service provider PPPoE Access Concentrators - whilst at the same time allowing Layer 3 IP traffic routing from the internal LAN(s) to the Internet.

Use this command to first create a PPPoE relay instance, then add a client and server interface to the instance.

**Example**

To configure a PPPoE relay instance, use the commands:

```
awplus# configure terminal
awplus(config)# pppoe-relay test
awplus(config-pppoe-relay)#
```

**Related commands**

client (pppoe-relay)

server (pppoe-relay)

timeout (pppoe-relay)

max-sessions

show running-config pppoe-relay

**Command changes**

Version 5.5.0-1.3: command added

# proxy-auth

**Overview**

Use this command to enable the proxy authentication to allow PPP authentication data to be collected and sent to an L2TP peer in additional L2TP AVPs when the L2TP session is established.

Use the **no** variant of this command to disable the proxy authentication.

**Syntax**

```
proxy-auth
no proxy-auth
```

**Default**

Proxy authentication is enabled by default.

**Mode**

PPPoE Access Concentrator Configuration

**Example**

To enable proxy authentication for the PPPoE AC service "ISP-service", use the commands:

```
awplus# configure terminal
awplus(config)# pppoe-ac ISP-service
awplus(config-pppoe-ac)# proxy-auth
```

Disable proxy authentication for PPPoE AC service "ISP-service:

```
awplus# configure terminal
awplus(config)# pppoe-ac ISP-service
awplus(config-pppoe-ac)# no proxy-auth
```

**Related commands**

destination l2tp

l2tp peer-address dns-lookup

l2tp peer-address radius-lookup group

ppp-auth-protocol

pppoe-ac-service

service-name

show running-config pppoe-ac

# server (pppoe-relay)

**Overview**

Use this command to configure a PPPoE relay server interface.

Use the **no** variant of this command to remove a PPPoE relay server interface.

**Syntax**

```
server <server-interface>
no server <server-interface>
```

| Parameter | Description |
|---|---|
| *<server-interface>* | The PPPoE relay server interface.<br>The valid interface types are: eth and vlan. |

**Default**

None.

**Mode**

PPPoE Relay Configuration

**Example**

To configure eth1 as the server interface on PPPoE relay instance 'Telco2', use the commands:

```
awplus# configure terminal
awplus(config)# pppoe-relay Telco2
awplus(config-pppoe-relay)# server eth1
```

To remove the eth1 server interface configured on PPPoE relay instance 'Telco2', use the commands:

```
awplus# configure terminal
awplus(config)# pppoe-relay Telco2
awplus(config-pppoe-relay)# no server eth1
```

**Related commands**

client (pppoe-relay)

timeout (pppoe-relay)

max-sessions

pppoe-relay

show running-config pppoe-relay

**Command changes**

Version 5.5.0-1.3: command added

# service-name

**Overview** Use this command to configure the PPPoE service name offered by the Access Concentrator (AC).

Use the **no** variant of this command to remove the service offered by the AC.

**Syntax**

```
service-name {any|<service-name> [advertised]}
no service-name {any|<service-name>}
```

| Parameter | Description |
|---|---|
| *<service-name>* | The name of the service to be offered. |
| any | The service should be provided to any client requesting it, regardless of the service name they request. |
| advertised | Whether the service is advertised to other clients. |

**Default** No PPPoE service is configured by default.

**Mode** PPPoE Access Concentrator Configuration

**Example** To set the PPPoE AC labelled 'ISP-service' to provide service to any client requesting it, regardless of the service name they request, use the commands:

```
awplus# configure terminal
awplus(config)# pppoe-ac ISP-service
awplus(config-pppoe-ac# service-name any
```

To offer a private (unadvertised) PPPoE service "internet" and an advertised PPPoE service "remote-office" to a client, use the commands:

```
awplus# configure terminal
awplus(config)# pppoe-ac ISP-service
awplus(config-pppoe-ac)# service-name internet
awplus(config-pppoe-ac)# service-name remote-office advertised
```

To remove the non-matching (any) PPPoE service so that it is no longer offered to a client, use the commands:

```
awplus# configure terminal
awplus(config)# pppoe-ac ISP-service
awplus(config-pppoe-ac)# no service-name any
```

To remove the private PPPoE service "internet" and advertised service "remote-office", so they are no longer offered to a client, use the commands:

```
awplus# configure terminal
awplus(config)# pppoe-ac ISP-service
awplus(config-pppoe-ac)# no service-name internet
awplus(config-pppoe-ac)# no service-name remote-office
```

**Related commands**

destination l2tp

l2tp peer-address dns-lookup

l2tp peer-address radius-lookup group

l2tp peer-address static

l2tp profile

pppoe-ac

ppp-auth-protocol

show running-config pppoe-ac

# show debugging pppoe ac

**Overview** Use this command to display the status of the PPPoE AC debugging.

**Syntax** `show debugging pppoe ac`

**Mode** Privileged Exec

**Usage notes** Enable PPPoE AC debugging with the **debug pppoe-ac** command.

**Example** To display the status of PPPoE AC debugging, use the command:

```
awplus# show debugging pppoe ac
```

**Output** Figure 22-1: Example output from **show debugging pppoe ac**

```
awplus#show debugging pppoe ac
PPPoE-AC Debugging is on
```

**Related commands** debug pppoe-ac

# show pppoe-ac config-check

**Overview** Use this command to display information about the validity of the configurations for PPPoE AC routes.

**Syntax** `show pppoe-ac [<label>] config-check`

| Parameter | Description |
|---|---|
| *<label>* | The label for the PPPoE AC service. |

**Mode** Privileged Exec

**Example** To display the validity of the configurations for all PPPoE AC services, use the command:

```
awplus# show pppoe-ac config-check
```

To display the validity of the configurations for the PPPoE AC labelled "ac1" only, use the command:

```
awplus# show pppoe-ac ac1 config-check
```

**Output** Figure 22-2: Example output from **show pppoe-ac config-check**

```
awplus#sh pppoe-ac config-check

PPPoE Access Concentrator ac:
  Incomplete Configuration
  Required: add pppoe-ac-service to one or more interfaces
  Required: destination
  Required: service-name
  Required: l2tp peer-address
  Required: l2tp profile

PPPoE Access Concentrator ac1:
  Incomplete Configuration
  Required: add pppoe-ac-service to one or more interfaces

PPPoE Access Concentrator pppoeservice:
  Complete Configuration
```

Table 22-1: Parameters in the output from **show pppoe-ac config-check**

| Parameter | Description |
|---|---|
| `Incomplete configuration` | Further configuration is required to create a valid PPPoE AC service. |

Table 22-1: Parameters in the output from **show pppoe-ac config-check** (cont.)

| Parameter | Description |
|---|---|
| `Complete configuration` | There is sufficient configuration of this PPPoE AC service to be valid. |
| `Required` | Parameters that still need to be configured for this PPPoE AC service. |

**Related commands**

pppoe-ac

show running-config pppoe-ac

# show pppoe-ac connections

**Overview** Use this command to display information about current routes for the specified PPPoE Access Concentrator (AC) service or for all PPPoE AC services.

**Syntax** `show pppoe-ac [<label>] connections`

| Parameter | Description |
|---|---|
| *<label>* | The label for the PPPoE AC service. |

**Mode** User Exec and Privileged Exec

**Example** To display current routes information for all PPPoE AC services, use the command:

```
awplus# show pppoe-ac connections
```

To display information about connected routes for the PPPoE AC service 'pppoeservice' only, use the command:

```
awplus# show pppoe-ac pppoeservice connections
```

**Output** Figure 22-3: Example output from **show pppoe-ac connections**

```
awplus#show pppoe-ac connections
PPPoE Access Concentrator Connection Status

-------------------------------------------------------------------
Route Name: pppoeservice-eth1
Route ID: 29785
Source Information
  Interface: eth1
  Session ID: 14204
  Service Name: test
  State: Open
  Peer MAC: 00:00:cd:38:01:4f
Destination Information
  Type: L2TP
  Tunnel ID: 11223
  Session ID: 57309
```

Table 22-2: Parameters in the output from **show pppoe-ac connections**

| Parameter | Description |
|---|---|
| `Route Name` | The name of the route. |
| `Route ID` | The ID of the route. |
| `Source Information` | Information about the source of the PPPoE route. |

Table 22-2: Parameters in the output from **show pppoe-ac connections** (cont.)

| Parameter | Description |
|---|---|
| `Interface` | The incoming interface name. |
| `Session ID` | The PPPoE session ID. |
| `Service Name` | The service name that this PPPoE AC is offering. This is the service name assigned by the **service-name** command. |
| `State` | The state of the PPPoE connection; e.g. open. |
| `Peer MAC` | The MAC address of the LNS. |
| `Destination Information` | Information about the destination for this PPPoE route. |
| `Type` | The type of destination of this PPPoE connection, for example, L2TP. |
| `Tunnel ID` | The ID of the L2TP tunnel. |
| `Session ID` | The ID of the PPPoE session. |

**Related commands**

pppoe-ac

# show pppoe-ac statistics

**Overview** Use this command to displays the statistics for the PPPoE Access Concentrator (AC).

**Syntax** `show pppoe-ac statistics`

**Mode** Privileged Exec

**Example** To display statistics for PPPoE AC, use the command:

```
awplus# show pppoe-ac statistics
```

**Output** Figure 22-4: Example output from **show pppoe-ac statistics**

```
awplus#sh pppoe-ac statistics
PPPoE Access Concentrator Statistics
 Name                                    Value
-------------------------------------------------------------
 lnsLookupSuccessfulRequests             0
 lnsLookupFailedRequests                 0
 lnsLookupDnsFailures                    0
 lnsLookupRadiusFailures                 0
 l2tpTunnelsOpened                       2
 l2tpSessionsOpened                      2
 l2tpSessionsClosed                      0
 l2tpDnsFailures                         0
 pppoePadiReceived                       2
 pppoeInvalidPadi                        0
 pppoePadoSent                           2
 pppoePadsSent                           2
 pppoePadrReceived                       2
 pppoeInvalidPadr                        0
 pppoeResentPadr                         0
 pppoePadtReceived                       0
 pppoeInvalidPadt                        0
 pppoePadtSent                           0
 routesCreated                           2
 routesCreateFail                        0
 routesDeleted                           0
 routesDeleteFail                        0
 routesDstOpenFail                       0
 routesDestCloseFail                     0
 routesSourceCloseFail                   0
 routesClosedByDest                      0
 routesClosedBySource                    0
```

Table 22-3: Parameters in the output from **show pppoe-ac statistic**

| Parameter | Description |
|---|---|
| `lnsLookupSuccessfulRequests` | The number of successful LNS address lookup requests. |
| `lnsLookupFailedRequests` | The number of failed LNS address lookup requests. |
| `lnsLookupDnsFailures` | The number of LNS address DNS lookup failures. |
| `lnsLookupRadiusFailures` | The number of LNS address RADIUS lookup failures. |
| `l2tpTunnelsOpened` | The number of L2TP tunnels opened. |
| `l2tpSessionsOpened` | The number of L2TP sessions opened. |
| `l2tpSessionsClosed` | The number of L2TP sessions closed. |
| `l2tpDnsFailures` | The number of L2TP DNS lookup failures. |
| `pppoePadiReceived` | The number of PADI packets received. |
| `pppoeInvalidPadi` | The number of invalid PADI packets received. |
| `pppoePadoSent` | The number of PADO packets sent. |
| `pppoePadsSent` | The number of PADS packets sent. |
| `pppoePadrReceived` | The number of PADR packets received. |
| `pppoeInvalidPadr` | The number of invalid PADR packets received. |
| `pppoeResentPadr` | The number of resent PADR packets received. |
| `pppoePadtReceived` | The number of PADT packets received. |
| `pppoeInvalidPadt` | The number of invalid PADT packets received. |
| `pppoePadtSent` | The number of PADT packets sent. |
| `routesCreated` | The number of routes created. |
| `routesCreateFail` | The number of route create failures. |
| `routesDeleted` | The number of routes deleted. |
| `routesDeleteFail` | The number of route delete failures. |
| `routesDstOpenFail` | The number of destination open failures. |

Table 22-3: Parameters in the output from **show pppoe-ac statistic** (cont.)

| Parameter | Description |
|---|---|
| `routesDestCloseFail` | The number of destination close failures. |
| `routesSourceCloseFail` | The number of source close failures. |
| `routesClosedByDest` | The number of routes closed by the destination. |
| `routesClosedBySource` | The number of routes closed by the source. |

**Related commands**

clear pppoe-ac statistics

pppoe-ac

# show running-config pppoe-ac

**Overview** Use this command to display the PPPoE Access Concentrator (AC) running configuration.

**Syntax**

```
show running-config pppoe-ac
```

**Mode** Privileged Exec

**Example** To display the running configuration for the PPPoE AC, use the command:

```
awplus# running-config pppoe-ac
```

**Output** Figure 22-5: Example output from **show running-config pppoe-ac**

```
awplus#show running-config pppoe-ac
 pppoe-ac-service ISP-service
  service-name remote-office advertised
  ppp-auth-protocols pap
  destination l2tp
  l2tp peer-address static 192.168.11.2
  l2tp profile PUBLIC
```

**Related commands**

destination l2tp

l2tp peer-address dns-lookup

l2tp peer-address radius-lookup group

l2tp peer-address static

l2tp profile

pppoe-ac

ppp-auth-protocol

proxy-auth

service-name

show pppoe-ac config-check

# show running-config pppoe-relay

**Overview** Use this command to display the running configuration for PPPoE relay.

**Syntax** `show running-config pppoe-relay [<relay-name>]`

| Parameter | Description |
|---|---|
| *<relay-name>* | Name of the PPPoE relay instance. |

**Default** None.

**Mode** Privileged Exec

**Example** To show all PPPoE relay configurations, use the command:

```
awplus# show running-config pppoe-relay
```

To show the PPPoE relay configuration for Telco1, use the command:

```
awplus# show running-config pppoe-relay Telco1
```

**Output** Figure 22-6: Example output from **show running-config pppoe-relay**

```
awplus#show running-config pppoe-relay
pppoe-relay Telco1
 client eth2
 server vlan4
 max-sessions 50
 timeout 100
!
pppoe-relay Telco2
 client eth1
 server vlan1
!
```

**Related commands**

client (pppoe-relay)

server (pppoe-relay)

timeout (pppoe-relay)

max-sessions

pppoe-relay

**Command changes** Version 5.5.0-1.3: command added

# timeout (pppoe-relay)

**Overview**

Use this command to configure the PPPoE relay idle session timeout.

Use the **no** variant of this command to set the PPPoE relay idle session timeout to the default value.

**Syntax**

```
timeout {0|<30-86400>}
no timeout
```

| Parameter | Description |
|---|---|
| 0 | Sets the idle session timeout to never terminate PPPoE relay sessions. |
| *<30-86400>* | The PPPoE relay idle session timeout in seconds. |

**Default**

600 seconds.

**Mode**

PPPoE Relay Configuration

**Example**

To set the PPPoE relay idle session timeout to 30 minutes, use the commands:

```
awplus# configure terminal
awplus(config)# pppoe-relay Telco1
awplus(config-pppoe-relay)# timeout 1800
```

To set the PPPoE relay idle session timeout to never timeout, use the commands:

```
awplus# configure terminal
awplus(config)# pppoe-relay Telco1
awplus(config-pppoe-relay)# timeout 0
```

To set the PPPoE relay idle session timeout to the default value, use the commands:

```
awplus# configure terminal
awplus(config)# pppoe-relay Telco1
awplus(config-pppoe-relay)# no timeout
```

**Related commands**

client (pppoe-relay)

server (pppoe-relay)

max-sessions

pppoe-relay

show running-config pppoe-relay

**Command changes**

Version 5.5.0-1.3: command added

# Part 3: Routing

# 23 IP Addressing and Protocol Commands

## Introduction

**Overview**

This chapter provides an alphabetical reference of commands used to configure various IP features, including the following protocols:

- Address Resolution Protocol (ARP)

For more information, see the IP Feature Overview and Configuration Guide.

**Command List**


- "arp-aging-timeout" on page 751
- "arp" on page 752
- "arp log" on page 754
- "arp opportunistic-nd" on page 757
- "arp-reply-bc-dmac" on page 759
- "clear arp-cache" on page 760
- "debug ip packet interface" on page 762
- "ip address (IP Addressing and Protocol)" on page 764
- "ip directed-broadcast" on page 766
- "ip forwarding" on page 768
- "ip forward-protocol udp" on page 769
- "ip gratuitous-arp-link" on page 771
- "ip helper-address" on page 773
- "ip icmp error-interval" on page 775
- "ip limited-local-proxy-arp" on page 776
- "ip local-proxy-arp" on page 778
- "ip proxy-arp" on page 779
- "ip redirects" on page 780

- "ip tcp synack-retries" on page 781
- "ip tcp timeout established" on page 782
- "ip unreachables" on page 783
- "local-proxy-arp" on page 785
- "optimistic-nd" on page 786
- "ping" on page 787
- "show arp" on page 789
- "show debugging ip packet" on page 791
- "show ip flooding-nexthops" on page 792
- "show ip forwarding" on page 793
- "show ip interface" on page 794
- "show ip interface vrf" on page 795
- "show ip sockets" on page 797
- "show ip traffic" on page 800
- "tcpdump" on page 802
- "traceroute" on page 803
- "undebug ip packet interface" on page 804

# arp-aging-timeout

**Overview**

This command sets a timeout period on dynamic ARP entries associated with a specific interface. If your device stops receiving traffic for the host specified in a dynamic ARP entry, it deletes the ARP entry from the ARP cache after this timeout is reached.

Your device times out dynamic ARP entries to ensure that the cache does not fill with entries for hosts that are no longer active. Static ARP entries are not aged or automatically deleted.

By default the time limit for dynamic ARP entries is 300 seconds on all interfaces.

The **no** variant of this command sets the time limit to the default of 300 seconds.

**Syntax**

```
arp-aging-timeout <0-432000>
no arp-aging timeout
```

| Parameter | Description |
|---|---|
| *<0-432000>* | The timeout period in seconds. |

**Default**

300 seconds (5 minutes)

**Mode**

Interface Configuration for VLAN interfaces.

**Example**

To set the ARP entries on interface vlan2 to time out after two minutes, use the commands:

```
awplus# configure terminal
awplus(config)# interface vlan2
awplus(config-if)# arp-aging-timeout 120
```

**Related commands**

clear arp-cache

show arp

# arp

**Overview** This command adds a static ARP entry to the ARP cache. This is typically used to add entries for hosts that do not support ARP or to speed up the address resolution function for a host. The ARP entry must not already exist. Use the **alias** parameter to allow your device to respond to ARP requests for this IP address.

If VRF-lite is configured, you can add ARP entries to either the global cache or for a specific VRF instance.

The **no** variant of this command removes the static ARP entry. Use the clear arp-cache command to remove the dynamic ARP entries in the ARP cache.

**Syntax**

```
arp <ip-addr> <mac-address> [<port-number>] [alias]
no arp <ip-addr>
```

**Syntax (VRF-lite)**

```
arp [vrf <vrf-name>] <ip-addr> <mac-address> [<port-number>]
[alias]
no arp [vrf <vrf-name>] <ip-addr>
```

| Parameter | Description |
|---|---|
| *<ip-addr>* | The IPv4 address of the device you are adding as a static ARP entry. |
| *<mac-address>* | The MAC address of the device you are adding as a static ARP entry, in hexadecimal notation with the format HHHH.HHHH.HHHH. |
| *<port-number>* | The port number associated with the IP address. Specify this when the IP address is part of a VLAN. |
| alias | Allows your device to respond to ARP requests for the IP address. Proxy ARP must be enabled on the interface before using this parameter. |
| vrf | Apply this command to a VRF instance. |
| *<vrf-name>* | The name of the VRF instance. |

**Mode** Global Configuration

**Examples** To add the IP address 10.10.10.9 with the MAC address 0010.2533.4655 into the ARP cache, and have your device respond to ARP requests for this address, use the commands:

```
awplus# configure terminal
awplus(config)# arp 10.10.10.9 0010.2355.4566 alias
```

**Example (VRF-lite)**

To apply the above example within a VRF instance called `red` use the following commands:

```
awplus# configure terminal
awplus(config)# arp vrf red 10.10.10.9 0010.2355.4566 alias
```

**Related commands**

clear arp-cache

ip proxy-arp

show arp

**Command changes**

Version 5.4.6-2.1: VRF-lite support added.

# arp log

**Overview**

This command enables the logging of dynamic and static ARP entries in the ARP cache. The ARP cache contains mappings of device ports, VLAN IDs, and IP addresses to physical MAC addresses for hosts.

This command can display the MAC addresses in the ARP log either using the notation HHHH.HHHH.HHHH, or using the IEEE standard hexadecimal notation (HH-HH-HH-HH-HH-HH).

Use the **no** variant of this command to disable the logging of ARP entries.

**Syntax**

```
arp log [mac-address-format ieee]
no arp log [mac-address-format ieee]
```

| Parameter | Description |
|---|---|
| `mac-address-format ieee` | Display the MAC address in the standard IEEE format (HH-HH-HH-HH-HH-HH), instead of displaying the MAC address with the format HHHH.HHHH.HHHH. |

**Default**

The ARP logging feature is disabled by default.

**Mode**

Global Configuration

**Usage notes**

You have the option to change how the MAC address is displayed in the ARP log message. The output can either use the notation HHHH.HHHH.HHHH or HH-HH-HH-HH-HH-HH.

Enter **arp log** to use HHHH.HHHH.HHHH notation.

Enter **arp log mac-address-format ieee** to use HH-HH-HH-HH-HH-HH notation.

Enter **no arp log mac-address-format ieee** to revert from HH-HH-HH-HH-HH-HH to HHHH.HHHH.HHHH.

Enter **no arp log** to disable ARP logging.

To display ARP log messages use the command **show log | include ARP_LOG**.

**Examples**

To enable ARP logging and specify that the MAC address in the log message is displayed in HHHH.HHHH.HHHH notation, use the following commands:

```
awplus# configure terminal
awplus(config)# arp log
```

To disable ARP logging on the device, use the following commands:

```
awplus# configure terminal
awplus(config)# no arp log
```

To enable ARP logging and specify that the MAC address in the log message is displayed in the standard IEEE format hexadecimal notation (HH-HH-HH-HH-HH-HH), use the following commands:

```
awplus# configure terminal
awplus(config)# arp log mac-address-format ieee
```

To leave ARP logging enabled, but stop using HH-HH-HH-HH-HH-HH format and use HHHH.HHHH.HHHH format instead, use the following commands:

```
awplus# configure terminal
awplus(config)# no arp log mac-address-format ieee
```

To display ARP log messages, use the following command:

```
awplus# show log | include ARP_LOG
```

**Output** Figure 23-1: Output from **show log | include ARP_LOG** after enabling ARP logging using **arp log**. Note that this output uses HHHH.HHHH.HHHH format.

```
awplus#configure terminal
awplus(config)#arp log
awplus(config)#exit
awplus#show log | include ARP_LOG
2018 Oct 6 06:21:01 user.notice awplus HSL[1007]: ARP_LOG port1.0.1 vlan1 add
0013.4078.3b98 (192.168.2.4)
2018 Oct 6 06:22:30 user.notice awplus HSL[1007]: ARP_LOG port1.0.1 vlan1 del
0013.4078.3b98 (192.168.2.4)
2018 Oct 6 06:23:26 user.notice awplus HSL[1007]: ARP_LOG port1.0.1 vlan1 add
0030.940e.136b (192.168.2.20)
2018 Oct 6 06:23:30 user.notice awplus IMISH[1830]: show log | include ARP_LOG
```

Figure 23-2: Output from **show log | include ARP_LOG** after enabling ARP logging using **arp log mac-address format ieee**. Note that this output uses HH-HH-HH-HH-HH-HH format.

```
awplus#configure terminal
awplus(config)#arp log mac-address-format ieee
awplus(config)#exit
awplus#show log | include ARP_LOG
2018 Oct 6 06:25:28 user.notice awplus HSL[1007]: ARP_LOG port1.0.1 vlan1 add
00-17-9a-b6-03-69 (192.168.2.12)
2018 Oct 6 06:25:30 user.notice awplus HSL[1007]: ARP_LOG port1.0.1 vlan1 add
00-03-37-6b-a6-a5 (192.168.2.10)
2018 Oct 6 06:26:53 user.notice awplus HSL[1007]: ARP_LOG port1.0.1 vlan1 del
00-30-94-0e-13-6b (192.168.2.20)
2018 Oct 6 06:27:31 user.notice awplus HSL[1007]: ARP_LOG port1.0.1 vlan1 del
00-17-9a-b6-03-69 (192.168.2.12)
2018 Oct 6 06:28:09 user.notice awplus HSL[1007]: ARP_LOG port1.0.1 vlan1 del
00-03-37-6b-a6-a5 (192.168.2.10)
2018 Oct 6 06:28:14 user.notice awplus IMISH[1830]: show log | include ARP_LOG
```

The following table lists the parameters in output of the **show log | include ARP_LOG** command. The ARP log message format is:

```
<date> <time> <severity> <hostname> <program-name>
ARP_LOG <port-number> <vid> <operation> <MAC> <IP>
```

Table 23-1: Parameters in the output from **show log | include ARP_LOG**

| Parameter | Description |
|---|---|
| ARP_LOG | Indicates that ARP log entry information follows. |
| *<port-number>* | Indicates device port number for the ARP log entry. |
| *<vid>* | Indicates the VLAN ID for the ARP log entry. |
| *<operation>* | Indicates "add" if the ARP log entry displays an ARP addition. Indicates "del" if the ARP log entry displays an ARP deletion. |
| *<MAC>* | Indicates the MAC address for the ARP log entry, either in the default hexadecimal notation (HHHH.HHHH.HHHH) or in the IEEE standard format hexadecimal notation (HH-HH-HH-HH-HH-HH) as specified with the **arp log** or the **arp log mac-address-format ieee** command. |
| *<IP>* | Indicates the IP address for the ARP log entry. |

**Related commands**

show log

show running-config

# arp opportunistic-nd

**Overview**

Use this command to enable opportunistic neighbor discovery for the global ARP cache. This command changes the behavior for unsolicited ARP packet forwarding on the device.

When using VRF-lite, you can use this command to enable opportunistic neighbor discovery for a named VRF instance.

Use the **no** variant of this command to disable opportunistic neighbor discovery for the global ARP cache.

**Syntax**

```
arp opportunistic-nd
no arp opportunistic-nd
```

**Syntax (VRF-lite)**

```
arp opportunistic-nd [vrf <vrf-name>]
no arp opportunistic-nd [vrf <vrf-name>]
```

| Parameter | Description |
|---|---|
| `vrf` | Apply this command to a VRF instance. |
| `<vrf-name>` | The name of the VRF instance. |

**Default**

Opportunistic neighbor discovery is disabled by default.

**Mode**

Global Configuration

**Usage notes**

When opportunistic neighbor discovery is enabled, the device will reply to any received unsolicited ARP packets (but not gratuitous ARP packets). The source MAC address for the unsolicited ARP packet is added to the ARP cache, so the device forwards the ARP packet. When opportunistic neighbor discovery is disabled, the source MAC address for the ARP packet is not added to the ARP cache, so the ARP packet is not forwarded by the device.

Note this command enables or disables opportunistic neighbor discovery for a VRF instance if the **vrf** parameter and an instance name are applied. If a VRF instance is not specified, then opportunistic neighbor discovery is enabled or disabled for device ports configured for IPv4.

**Examples**

To enable opportunistic neighbor discovery for the global ARP cache, enter:

```
awplus# configure terminal
awplus(config)# arp opportunistic-nd
```

To disable opportunistic neighbor discovery for the global ARP cache, enter:

```
awplus# configure terminal
awplus(config)# no arp opportunistic-nd
```

**Example (VRF-lite)**

To enable opportunistic neighbor discovery for the VRF instance 'blue', enter:

```
awplus# configure terminal
awplus(config)# arp opportunistic-nd vrf blue
```

To disable opportunistic neighbor discovery for the VRF instance 'blue', enter:

```
awplus# configure terminal
awplus(config)# no arp opportunistic-nd vrf blue
```

**Related commands**

ipv6 opportunistic-nd

show arp

show running-config interface

**Command changes**

Version 5.4.6-2.1: VRF-lite support added.

# arp-reply-bc-dmac

**Overview**

Use this command to allow processing of ARP replies that arrive with a broadcast destination MAC (ffff.ffff.ffff). This makes neighbors reachable if they send ARP responses that contain a broadcast destination MAC.

Use the **no** variant of this command to turn off processing of ARP replies that arrive with a broadcast destination MAC.

**Syntax**

```
arp-reply-bc-dmac
no arp-reply-bc-dmac
```

**Default**

By default, this functionality is disabled.

**Mode**

Interface Configuration for VLAN, Eth, WWAN, L2TP tunnel, Multipoint VPN GRE, and bridge interfaces and 802.1Q sub-interfaces.

**Example**

To allow processing of ARP replies that arrive on vlan2 with a broadcast destination MAC, use the commands:

```
awplus# configure terminal
awplus(config)# interface vlan2
awplus(config-if)# arp-reply-bc-dmac
```

**Related commands**

clear arp-cache

show arp

# clear arp-cache

**Overview**

This command deletes dynamic ARP entries from the ARP cache. You can optionally specify the IPv4 address of an ARP entry to be cleared from the ARP cache.

When running VRF-lite, this command deletes dynamic ARP entries either from the ARP cache of a specific VRF instance, or from the ARP cache of the Global VRF instance. To delete all ARP entries from both the Global VRF instance and all VRF instances, use the command with no parameters. You can optionally specify the IPv4 address for the VRF instance to clear an ARP entry from the ARP cache.

**Syntax**

```
clear arp-cache [<ip-address>]
```

**Syntax (VRF-lite)**

```
clear arp-cache [vrf <vrf-name>|global] [<ip-address>]
```

| Parameter | Description |
|---|---|
| *<ip-address>* | Specifies a specific IPv4 address for a VRF instance whose entries are to be cleared from the ARP cache. |
| `global` | When VRF-lite is configured, apply this command to the global routing and forwarding table. |
| `vrf` | Apply this command to the specified VRF instance. |
| *<vrf-name>* | The VRF instance name |

**Mode**

Privileged Exec

**Usage notes**

To display the entries in the ARP cache, use the show arp command. To remove static ARP entries, use the no variant of the arp command.

**Example**

To clear all dynamic ARP entries, use the command:

```
awplus# clear arp-cache
```

To clear all dynamic ARP entries associated with the IPv4 address 192.168.1.1, use the command:

```
awplus# clear arp-cache 192.168.1.1
```

**Example (VRF-lite)**

To clear the dynamic ARP entries from the VRF instance named blue, use the commands:

```
awplus# clear arp-cache vrf blue
```

To clear the dynamic ARP entries from the VRF instance named blue with the IPv4 address 192.168.1.1, use the commands:

```
awplus# clear arp-cache vrf blue 192.168.1.1
```

When running VRF-lite, to clear the dynamic ARP entries from the global VRF-lite and all VRF instances, use the command:

```
awplus# clear arp-cache
```

**Related commands**

arp

show arp

# debug ip packet interface

**Overview** The **debug ip packet interface** command enables IP packet debug and is controlled by the **terminal monitor** command.

If the optional **icmp** keyword is specified then ICMP packets are shown in the output.

The **no** variant of this command disables the **debug ip interface** command.

**Syntax**

```
debug ip packet interface {<interface-name>|all} [address
<ip-address>|verbose|hex|arp|udp|tcp|icmp]
```

```
no debug ip packet interface [<interface-name>]
```

| Parameter | Description |
|---|---|
| *<interface>* | Specify a single Layer 3 interface name (not a range of interfaces) This keyword can be specified as either all or as a single Layer 3 interface to show debugging for either all interfaces or a single interface. |
| `all` | Specify all Layer 3 interfaces on the device. |
| *<ip-address>* | Specify an IPv4 address.<br>If this keyword is specified, then only packets with the specified IP address as specified in the ip-address placeholder are shown in the output. |
| `verbose` | Specify **verbose** to output more of the IP packet.<br>If this keyword is specified then more of the packet is shown in the output. |
| `hex` | Specify **hex** to output the IP packet in hexadecimal.<br>If this keyword is specified, then the output for the packet is shown in hex. |
| `arp` | Specify **arp** to output ARP protocol packets.<br>If this keyword is specified, then ARP packets are shown in the output. |
| `udp` | Specify **udp** to output UDP protocol packets.<br>If this keyword is specified then UDP packets are shown in the output. |
| `tcp` | Specify **tcp** to output TCP protocol packets.<br>If this keyword is specified, then TCP packets are shown in the output. |
| `icmp` | Specify **icmp** to output ICMP protocol packets.<br>If this keyword is specified, then ICMP packets are shown in the output. |

**Mode** Privileged Exec and Global Configuration

**Examples**

To turn on ARP packet debugging on vlan2, use the command:

```
awplus# debug ip packet interface vlan2 arp
```

To turn off IP packet interface debugging on interface vlan2, use the command:

```
awplus# no debug ip packet interface vlan2
```

To turn on all packet debugging on all interfaces on the device, use the command:

```
awplus# debug ip packet interface all
```

To turn off IP packet interface debugging on all interfaces, use the command:

```
awplus# no debug ip packet interface
```

To turn on TCP packet debugging on vlan2 and IP address 192.168.2.4, use the command:

```
awplus# debug ip packet interface vlan2 address 192.168.2.4 tcp
```

**Related commands**

no debug all

show debugging ip dns forwarding

tcpdump

terminal monitor

undebug ip packet interface

# ip address (IP Addressing and Protocol)

**Overview** This command sets a static IP address on an interface.

The **no** variant of this command removes the IP address from the interface.

You cannot remove the primary address when a secondary address is present.

**Syntax**

```
ip address <ip-addr/prefix-length> [secondary] [label <label>]
no ip address [<ip-addr/prefix-length>] [secondary]
```

| Parameter | Description |
|---|---|
| *<ip-addr/prefix-length>* | The IPv4 address and prefix length you are assigning to the interface. |
| `secondary` | Secondary IP address. |
| `label` | Adds a user-defined description of the secondary IP address. |
| *<label>* | A user-defined description of the secondary IP address. Valid characters are any printable character and spaces. |

**Mode** Interface Configuration for a VLAN interface, an Eth interface, an 802.1Q sub-interface, a local loopback interface, a PPP interface, a bridge, or a tunnel.

**Usage notes** To set the primary IP address on the interface, specify only **ip address** *<ip-addr/prefix-length>*. This overwrites any configured primary IP address. To add additional IP addresses on this interface, use the **secondary** parameter. You must configure a primary address on the interface before configuring a secondary address.

***NOTE:*** *Use **show running-config interface**, instead of **show ip interface brief**, when you need to view a secondary address configured on an interface. **show ip interface brief** will only show the primary address, not a secondary address for an interface.*

**Examples** To add the IP address 10.10.10.50/24 to the interface vlan2, use the following commands:

```
awplus# configure terminal
awplus(config)# interface vlan2
awplus(config-if)# ip address 10.10.10.50/24
```

To add the secondary IP address 10.10.11.50/24 to the same interface, use the following commands:

```
awplus# configure terminal
awplus(config)# interface vlan2
awplus(config-if)# ip address 10.10.11.50/24 secondary
```

To add the IP address 10.10.11.50/24 to the local loopback interface lo, use the following commands:

```
awplus# configure terminal
awplus(config)# interface lo
awplus(config-if)# ip address 10.10.11.50/24
```

To add the IP address 10.10.11.50/24 to the PPP interface ppp0, use the following commands:

```
awplus# configure terminal
awplus(config)# interface ppp0
awplus(config-if)# ip address 10.10.11.50/24
```

To add the IP address 10.10.11.50/24 to the tunnel tunnel0, use the following commands:

```
awplus# configure terminal
awplus(config)# interface tunnel0
awplus(config-if)# ip address 10.10.11.50/24
```

**Related commands**

interface (to configure)

show ip interface

show running-config interface

# ip directed-broadcast

**Overview**

Use this command to enable flooding of directed broadcast packets into a directly connected subnet. If this command is configured on a VLAN interface, then directed broadcasts received on other VLAN interfaces, destined for the subnet on this VLAN, will be flooded to the subnet broadcast address of this VLAN.

Use the **no** variant of this command to disable **ip directed-broadcast**. When this feature is disabled using the **no** variant of this command, directed broadcasts are not forwarded.

**Syntax**

```
ip directed-broadcast
no ip directed-broadcast
```

**Default**

The **ip directed-broadcast** command is disabled by default.

**Mode**

Interface Configuration for a VLAN interface, a local loopback interface, or a PPP interface.

**Usage notes**

IP directed-broadcast is enabled and disabled per VLAN interface. When enabled a directed broadcast packet is forwarded to an enabled VLAN interface if received on another subnet.

An IP directed broadcast is an IP packet whose destination address is a broadcast address for some IP subnet, but originates from a node that is not itself part of that destination subnet. When a directed broadcast packet reaches a device that is directly connected to its destination subnet, that packet is flooded as a broadcast on the destination subnet.

The **ip directed-broadcast** command controls the flooding of directed broadcasts when they reach target subnets. The command affects the final transmission of the directed broadcast on its destination subnet. It does not affect the transit unicast routing of IP directed broadcasts. If directed broadcast is enabled for an interface, incoming directed broadcast IP packets intended for the subnet assigned to the interface will be flooded as broadcasts on that subnet.

If the **no ip directed-broadcast** command is configured for an interface, directed broadcasts destined for the subnet where the interface is attached will be dropped instead of broadcast.

**Examples**

To enable the flooding of broadcast packets out via the PPP interface ppp0, use the following commands:

```
awplus# configure terminal
awplus(config)# interface ppp0
awplus(config-if)# ip directed-broadcast
```

To disable the flooding of broadcast packets via PPP interface ppp0, use the following commands:

```
awplus# configure terminal
awplus(config)# interface ppp0
awplus(config-if)# no ip directed-broadcast
```

**Related commands**

ip forward-protocol udp

ip helper-address

show running-config

# ip forwarding

**Overview**

This command enables IP forwarding on your device. When enabled, your device routes IP packets.

The **no** variant of this command disables IP forwarding on your device. Even when IP forwarding is not enabled, the device can still work as an IP host; in particular, it can be managed by IP-based applications, such as SNMP, Telnet and SSH.

**Syntax**

```
ip forwarding
no ip forwarding
```

**Default**

IP forwarding is enabled by default.

**Mode**

Global Configuration

**Examples**

To enable your device to route IP packets, use the commands:

```
awplus# configure terminal
awplus(config)# ip forwarding
```

To stop your device from routing IP packets, use the commands

```
awplus# configure terminal
awplus(config)# no ip forwarding
```

**Related commands**

show ip forwarding

# ip forward-protocol udp

**Overview** This command enables you to control which UDP broadcasts will be forwarded to the helper address(es). A UDP broadcast will only be forwarded if the destination UDP port number in the packet matches one of the port numbers specified using this command.

Refer to the IANA site (www.iana.org) for a list of assigned UDP port numbers for protocols to forward using **ip forward-protocol udp**.

Use the **no** variant of this command to remove a port number from the list of destination port numbers that are used as the criterion for deciding if a given UDP broadcast should be forwarded to the IP helper address(es).

**Syntax**

```
ip forward-protocol udp <port>
no ip forward-protocol udp <port>
```

| Parameter | Description |
|---|---|
| *<port>* | UDP Port Number. |

**Default** The **ip forward-protocol udp** command is not enabled by default.

**Mode** Global Configuration

**Usage notes** Combined with the ip helper-address command in interface mode, the **ip forward-protocol udp** command in Global Configuration mode allows control of which protocols (destination port numbers) are forwarded. The **ip forward-protocol udp** command configures protocols for forwarding, and the **ip helper-address** command configures the destination address(es).

***NOTE:***

*The types of UDP broadcast packets that the device will forward are ONLY those specified by the **ip forward-protocol** command(s). There are no other UDP packet types that the IP helper process forwards by default.*

**Examples** To configure forwarding of packets on a UDP port, use the following commands:

```
awplus# configure terminal
awplus(config)# ip forward-protocol udp <port>
```

To delete a UDP port from the UDP ports that the device forwards, use the following commands:

```
awplus# configure terminal
awplus(config)# no ip forward-protocol udp <port>
```

**Related commands**

ip helper-address

ip directed-broadcast

show running-config

# ip gratuitous-arp-link

**Overview** This command sets the Gratuitous ARP time limit for all interfaces. The time limit restricts the sending of Gratuitous ARP packets to one Gratuitous ARP packet within the time in seconds.

The **no** variant of the command sets the Gratuitous ARP time limit to the default.

***NOTE:*** *This command specifies time between sequences of Gratuitous ARP packets, and time between individual Gratuitous ARP packets occurring in a sequence, to allow legacy support for older devices and inter-operation between other devices that are not ready to receive and forward data until several seconds after linkup.*

*Additionally, jitter has been applied to the delay following linkup, so Gratuitous ARP packets applicable to a given port are spread over a period of 1 second so are not all sent at once. Remaining Gratuitous ARP packets in the sequence occur after a fixed delay from the first one.*

**Syntax**

```
ip gratuitous-arp-link <0-300>
no ip gratuitous-arp-link
```

| Parameter | Description |
|---|---|
| *<0-300>* | Specify the minimum time between sequences of Gratuitous ARPs and the fixed time between Gratuitous ARPs occurring in a sequence, in seconds.<br>0 disables the sending of Gratuitous ARP packets.<br>The default is 8 seconds. |

**Default** The default Gratuitous ARP time limit for all interfaces is 8 seconds.

**Mode** Global Configuration

**Usage** Every switchport will send a sequence of 3 Gratuitous ARP packets to each VLAN that the switchport is a member of, whenever the switchport moves to the forwarding state. The first Gratuitous ARP packet is sent 1 second after the switchport becomes a forwarding switchport. The second and third Gratuitous ARP packets are each sent after the time period specified by the Gratuitous ARP time limit.

Additionally, the Gratuitous ARP time limit specifies the minimum time between the end of one Gratuitous ARP sequence and the start of another Gratuitous ARP sequence. When a link is flapping, the switchport's state is set to forwarding several times. The Gratuitous ARP time limit is imposed to prevent Gratuitous ARP packets from being sent undesirably often.

**Examples** To disable the sending of Gratuitous ARP packets, use the commands :

```
awplus# configure terminal
awplus(config)# ip gratuitous-arp-link 0
```

To restrict the sending of Gratuitous ARP packets to one every 20 seconds, use the commands:

```
awplus# configure terminal
awplus(config)# ip gratuitous-arp-link 20
```

**Related Commands**

show running-config

# ip helper-address

**Overview** Use this command to add a forwarding destination address for IP Helper to enable forwarding of User Datagram Protocol (UDP) broadcasts on an interface.

Use the **no** variant of this command to disable the forwarding of broadcast packets to specific addresses.

**Syntax**

```
ip helper-address <ip-addr>
no ip helper-address <ip-addr>
```

| Parameter | Description |
|---|---|
| *<ip-addr>* | Forwarding destination IP address for IP Helper. |

**Default** The destination address for the **ip helper-address** command is not configured by default.

**Mode** Interface Configuration for a VLAN interface.

**Usage notes** Combined with the ip forward-protocol udp command in global configuration mode, the **ip helper-address** command in interface mode allows control of which protocols (destination port numbers) are forwarded. The **ip forward-protocol udp** command configures protocols for forwarding, and the **ip helper-address** command configures the destination address(es).

The destination address can be a unicast address or a subnet broadcast address. The UDP destination port is configured separately with the **ip forward-protocol udp** command. If multiple destination addresses are registered then UDP packets are forwarded to each IP address added to an IP Helper. Up to 32 destination addresses may be added using IP Helper.

The device will only forward the types of UDP broadcast packets that are specified by the **ip forward-protocol** command(s). The device does not forward any other UDP packet types by default.

The **ip helper-address** command does not support BOOTP / DHCP Relay. The service dhcp-relay command must be used instead. For this reason, you may not configure UDP ports 67 and 68 with the **ip forward-protocol** command.

See the IP Feature Overview and Configuration Guide for more information about DHCP Relay.

**Examples** The following example defines IPv4 address 192.168.1.100 as an IP Helper destination address to which to forward UDP broadcasts received on ppp0:

```
awplus# configure terminal
awplus(config)# interface ppp0
awplus(config-if)# ip helper-address 192.168.1.100
```

The following example removes IPv4 address 192.168.1.100 as an IP Helper destination address to which to forward UDP broadcasts received on ppp0:

```
awplus# configure terminal
awplus(config)# interface ppp0
awplus(config-if)# no ip helper-address 192.168.1.100
```

**Related commands**

ip forward-protocol udp

ip directed-broadcast

show running-config

# ip icmp error-interval

**Overview** Use this command to limit how often IPv4 ICMP error messages are sent. The maximum frequency of messages is specified in milliseconds.

Use the **no** variant of this command to reset the frequency to the default.

**Syntax**

```
ip icmp error-interval <interval>
no ip icmp error-interval
```

| Parameter | Description |
|---|---|
| *<interval>* | 0-2147483647, interval in milliseconds. |

**Default** 1000

**Mode** Global Configuration

**Example** To configure the rate to be at most one packet every 10 seconds, use the commands:

```
awplus# configure terminal
awplus(config)# ip icmp error-interval 10000
```

To reset the rate to the default of one packet every second, use the commands:

```
awplus# configure terminal
awplus(config)# no ip icmp error-interval
```

**Related commands** ipv6 icmp error-interval

# ip limited-local-proxy-arp

**Overview**

Use this command to enable local proxy ARP, but only for a specified set of IP addresses. This makes the device respond to ARP requests for those IP addresses when the addresses are reachable via the interface you are configuring.

To specify the IP addresses, use the command local-proxy-arp.

Use the **no** variant of this command to disable limited local proxy ARP. This stops your device from intercepting and responding to ARP requests for the specified hosts. This allows the hosts to use MAC address resolution to communicate directly with one another.

**Syntax**

```
ip limited-local-proxy-arp
no ip limited-local-proxy-arp
```

**Default**

Limited local proxy ARP is disabled by default.

**Mode**

Interface Configuration

**Usage**

Limited local proxy ARP supports Static NAT configurations in which the NAT configuration's public address is different to the ethernet interface's address.

On such ethernet interfaces, the device needs to respond to ARP requests for the public address so that it will receive packets targeted at that address.

Limited local proxy ARP makes this possible. It is especially useful when you have a number of 1-1 NAT configurations and each public address falls within the public interface's subnet. If you enable limited local proxy ARP on the public interface and specify suitable addresses, the device will respond to ARP requests for those addresses, as long as the addresses are routed out the interface the ARP requests are received on. The device responds with its own MAC address.

**Example**

The following configuration snippet shows how to use limited local proxy ARP, if you are using NAT for an HTTP server with an address of 172.22.0.3 connected via eth1, and eth1 has an address of 172.22.0.1:

```
! Create a private zone for the HTTP server with address 172.22.200.3:
zone private
network vlan1
ip subnet 172.22.200.0/24
host http_server
ip address 172.22.200.3
!
! Create a public zone for the HTTP server with address 172.22.0.3:
zone public
network eth1
ip subnet 0.0.0.0/0 interface eth1
host http_server
ip address 172.22.0.3
!
! Create a NAT rule to map from the public to the private zone:
nat
rule 10 portfwd http from public.eth1 to public.eth1.http_server with dst
private.vlan1.http_server
enable
!
! Configure eth1. It has a different public address than the HTTP server:
interface eth1
ip limited local-proxy-arp
ip address 172.22.0.1/24
!
! Configure vlan1:
interface vlan1
ip address 172.22.200.5/24
!
! Tell the device to respond to ARPs for the HTTP server public address:
local-proxy-arp 172.22.0.3/32
```

**Related commands**

ip local-proxy-arp

local-proxy-arp

# ip local-proxy-arp

**Overview**

This command allows you to stop MAC address resolution between hosts within a private VLAN edge interface. Local Proxy ARP works by intercepting ARP requests between hosts within a subnet and responding with your device's own MAC address details instead of the destination host's details. This stops hosts from learning the MAC address of other hosts within its subnet through ARP requests.

Local Proxy ARP ensures that devices within a subnet cannot send traffic that bypasses Layer 3 routing on your device. This lets you monitor and filter traffic between hosts in the same subnet, and enables you to have control over which hosts may communicate with one another.

When Local Proxy ARP is operating on an interface, your device does not generate or forward any ICMP-Redirect messages on that interface. This command does not enable proxy ARP on the interface; see the ip proxy-arp command for more information on enabling proxy ARP.

The **no** variant of this command disables Local Proxy ARP to stop your device from intercepting and responding to ARP requests between hosts within a subnet. This allows the hosts to use MAC address resolution to communicate directly with one another. Local Proxy ARP is disabled by default.

**Syntax**

```
ip local-proxy-arp
no ip local-proxy-arp
```

**Default**

Local proxy ARP is disabled by default

**Mode**

Interface Configuration for VLAN, Eth, WWAN, L2TP tunnel, Multipoint VPN GRE, and bridge interfaces and 802.1Q sub-interfaces.

**Examples**

To enable your device to apply Local Proxy ARP on the interface vlan2, use the following commands:

```
awplus# configure terminal
awplus(config)# interface vlan2
awplus(config-if)# ip local-proxy-arp
```

To disable your device to apply Local Proxy ARP on the interface vlan2, use the following commands:

```
awplus# configure terminal
awplus(config)# interface vlan2
awplus(config-if)# no ip local-proxy-arp
```

**Related commands**

ip proxy-arp

show arp

show running-config

# ip proxy-arp

**Overview**

This command enables Proxy ARP responses to ARP requests on an interface. When enabled, your device intercepts ARP broadcast packets and substitutes its own physical address for that of the remote host. By responding to the ARP request, your device ensures that subsequent packets from the local host are directed to its physical address, and it can then forward these to the remote host.

Your device responds only when it has a specific route to the address being requested, excluding the interface route that the ARP request arrived from. It ignores all other ARP requests. See the ip local-proxy-arp command about enabling your device to respond to other ARP messages.

The **no** variant of this command disables Proxy ARP responses on an interface. Proxy ARP is disabled by default.

**Syntax**

```
ip proxy-arp
no ip proxy-arp
```

**Default**

Proxy ARP is disabled by default.

**Mode**

Interface Configuration for VLAN, Eth, WWAN, L2TP tunnel, Multipoint VPN GRE, and bridge interfaces and 802.1Q sub-interfaces.

**Examples**

To enable your device to Proxy ARP on the interface vlan2, use the following commands:

```
awplus# configure terminal
awplus(config)# interface vlan2
awplus(config-if)# ip proxy-arp
```

To disable your device to Proxy ARP on the interface vlan2, use the following commands:

```
awplus# configure terminal
awplus(config)# interface vlan2
awplus(config-if)# no ip proxy-arp
```

**Related commands**

arp

ip local-proxy-arp

show arp

show running-config

# ip redirects

**Overview** This command enables the device to send ICMP redirects.

Use the **no** variant of this command to stop the device from sending ICMP redirects.

**Syntax**

```
ip redirects
no ip redirects
```

**Default** ICMP redirects are disabled by default.

**Mode** Global Configuration.

**Usage notes** ICMP redirect messages are used to notify hosts that a better route is available to a destination.

ICMP redirects are used when a packet is routed into the device on the same interface that the packet is routed out of the device. ICMP redirects are only sent to packet sources that are directly connected to the device.

**Examples** To enable the switch to send ICMP redirects, use the following commands:

```
awplus# configure terminal
awplus(config)# ip redirects
```

To stop the switch from sending ICMP redirects, use the following commands:

```
awplus# configure terminal
awplus(config)# no ip redirects
```

# ip tcp synack-retries

**Overview**

Use this command to specify how many times the switch will retry sending a SYN ACK for a TCP connection for which it has received a SYN but not an ACK. Such connections are called half-open TCP connections. This command allows you to influence how long half-open TCP connections take to time out.

Use the **no** variant of this command to return to the default setting of 5 retries.

**Syntax**

```
ip tcp synack-retries <0-255>
no ip tcp synack-retries
```

| Parameter | Description |
|---|---|
| *<0-255>* | Number of times to retry sending the SYN ACK |

**Default**

5 retries

**Mode**

Global Configuration

**Usage notes**

The following table shows the approximate correlation between the number of retries and the time half-open TCP connections take to time out.

| Number of retries | Approximate lower bound for the timeout |
|---|---|
| 0 retries | 1 second |
| 1 retry | 3 seconds |
| 2 retries | 7 seconds |
| 3 retries | 15 seconds |
| 4 retries | 31 seconds |
| 5 retries | 63 seconds |

**Example**

To retry twice, which leads to a timeout of approximately 7 seconds, use the commands:

```
awplus# configure terminal
awplus(config)# ip tcp synack-retries 2
```

**Related commands**

show running-config

**Command changes**

Version 5.4.7-0.2: command added

# ip tcp timeout established

**Overview**

Use this command to set the idle timeout for all established TCP connections.

Use the **no** variant of this command to set the idle timeout back to the default of 3600 seconds.

**Syntax**

```
ip tcp timeout established <1-31536000>
no ip tcp timeout established
```

| Parameter | Description |
|---|---|
| *<1-31536000>* | Idle timeout for established TCP connections in seconds from 1 to 3153600. |

**Default**

3600 seconds (1 hour)

**Mode**

Global Configuration

**Usage notes**

By default, when a TCP session is successfully established through the firewall, when the session goes idle, it automatically times out of the firewall connection tracking table after 3600 seconds. In some situations it may be beneficial to time out unused established TCP sessions earlier.

For example, in a busy environment where there is an excessive number of sessions being established, the firewall connection tracking table could become oversubscribed, with new connections being blocked until older sessions are timed out.

**Example**

To set a non-default TCP session timeout for established idle sessions of 1800 seconds (30 minutes), use the commands:

```
awplus# configure terminal
awplus(config)# ip tcp timeout established 1800
```

**Example**

To set the TCP session timeout for established idle sessions back to the default setting of 3600 seconds, use the commands:

```
awplus# configure terminal
awplus(config)# no ip tcp timeout established
```

**Related commands**

show running-config

**Command changes**

Version 5.4.6-1.1: command added

# ip unreachables

**Overview** Use this command to enable ICMP (Internet Control Message Protocol) type 3, destination unreachable, messages.

Use the **no** variant of this command to disable destination unreachable messages. This prevents an attacker from using these messages to discover the topology of a network.

**Syntax**

```
ip unreachables
no ip unreachables
```

**Default** Destination unreachable messages are enabled by default.

**Mode** Global Configuration

**Usage notes** When a device receives a packet for a destination that is unreachable it returns an ICMP type 3 message, this message includes a reason code, as per the table below. An attacker can use these messages to obtain information regarding the topology of a network. Disabling destination unreachable messages, using the **no ip unreachables** command, secures your network against this type of probing.

***NOTE:*** *Disabling ICMP destination unreachable messages breaks applications such as traceroute and Path MTU Discovery (PMTUD), which depend on these messages to operate correctly.*

Table 23-2: ICMP type 3 reason codes and description

| Code | Description [RFC] |
|---|---|
| 0 | Network unreachable [RFC792] |
| 1 | Host unreachable [RFC792] |
| 2 | Protocol unreachable [RFC792] |
| 3 | Port unreachable [RFC792] |
| 4 | Fragmentation required, and DF flag set [RFC792] |
| 5 | Source route failed [RFC792] |
| 6 | Destination network unknown [RFC1122] |
| 7 | Destination host unknown [RFC1122] |
| 8 | Source host isolated [RFC1122] |
| 9 | Network administratively prohibited [RFC768] |
| 10 | Host administratively prohibited [RFC869] |
| 11 | Network unreachable for Type of Service [RFC908] |
| 12 | Host unreachable for Type of Service [RFC938] |
| 13 | Communication administratively prohibited [RFC905] |

Table 23-2: ICMP type 3 reason codes and description (cont.)

| Code | Description [RFC] |
|---|---|
| 14 | Host Precedence Violation [RFC1812] |
| 15 | Precedence cutoff in effect [RFC1812] |

**Example** To disable destination unreachable messages, use the commands

```
awplus# configure terminal
awplus(config)# no ip unreachables
```

To enable destination unreachable messages, use the commands

```
awplus# configure terminal
awplus(config)# ip unreachables
```

# local-proxy-arp

**Overview** Use this command to specify an IP subnet for use with limited local proxy ARP. When limited local proxy ARP is enabled with the command ip limited-local-proxy-arp, the device will respond to ARP requests for addresses in that subnet.

Use the **no** variant of this command to stop specifying a subnet for use with limited local proxy ARP.

**Syntax**

```
local-proxy-arp [<ip-add/mask>]
no local-proxy-arp [<ip-add/mask>]
```

| Parameter | Description |
|---|---|
| *<ip-add/mask>* | The IP subnet to use with limited local proxy ARP, in dotted decimal format (A.B.C.D/M). To specify a single IP address, use a 32-bit mask. |

**Default** No subnets are specified for use with limited local proxy ARP.

**Mode** Global Configuration

**Example** To specify limited local proxy ARP for the address 172.22.0.3, use the following commands:

```
awplus# configure terminal
awplus(config)# local-proxy-arp 172.22.0.3/32
```

This is part of a configuration snippet that shows how to use limited local proxy ARP with static NAT. See the command ip limited-local-proxy-arp for the whole example.

**Related commands** ip limited-local-proxy-arp

# optimistic-nd

**Overview**

Use this command to enable the optimistic neighbor discovery feature for both IPv4 and IPv6.

Use the **no** variant of this command to disable the optimistic neighbor discovery feature.

**Syntax**

```
optimistic-nd
no optimistic-nd
```

**Default**

The optimistic neighbor discovery feature is enabled by default.

**Mode**

Interface Configuration for a VLAN interface.

**Usage notes**

The optimistic neighbor discovery feature allows the device, after learning an IPv4 or IPv6 neighbor, to refresh the neighbor before it is deleted from the ARP or neighbor tables. The optimistic neighbor discovery feature enables the device to sustain L3 traffic switching to a neighbor without interruption.

If a neighbor receiving optimistic neighbor solicitations does not answer optimistic neighbor solicitations with neighbor advertisements, then the device puts the neighbor entry into the 'stale' state, and subsequently deletes it from the L3 switching tables.

**Examples**

To enable the optimistic neighbor discovery feature on vlan2, use the following commands:

```
awplus# configure terminal
awplus(config)# interface vlan2
awplus(config-if)# optimistic-nd
```

To disable the optimistic neighbor discovery feature on vlan2, use the following commands:

```
awplus# configure terminal
awplus(config)# interface vlan2
awplus(config-if)# no optimistic-nd
```

**Related commands**

show running-config

# ping

**Overview** This command sends a query to another IPv4 host (send Echo Request messages).

**Syntax**

```
ping [ip] <host> [broadcast] [df-bit {yes|no}] [interval
<0-128>] [pattern <hex-data-pattern>] [repeat
{<1-2147483647>|continuous}] [size <36-18024>] [source
<ip-addr>] [timeout <1-65535>] [tos <0-255>]
```

**Syntax (VRF-lite)**

```
ping [vrf <vrf-name>] [ip] <host> [broadcast] [df-bit {yes|no}]
[interval <0-128>] [pattern <hex-data-pattern>] [repeat
{<1-2147483647>|continuous}] [size <36-18024>] [source
<ip-addr>] [timeout <1-65535>] [tos <0-255>]
```

| Parameter | Description |
|---|---|
| *<host>* | The destination IP address or hostname. |
| `broadcast` | Allow pinging of a broadcast address. |
| `df-bit` | Enable or disable the do-not-fragment bit in the IP header. |
| `interval` *<0-128>* | Specify the time interval in seconds between sending ping packets. The default is 1. You can use decimal places to specify fractions of a second. For example, to ping every millisecond, set the interval to 0.001. |
| `pattern` *<hex-data-pattern>* | Specify the hex data pattern. |
| `repeat` | Specify the number of ping packets to send. |
| *<1-2147483647>* | Specify repeat count. The default is 5. |
| `continuous` | Continuous ping |
| `size` *<36-18024>* | The number of data bytes to send, excluding the 8 byte ICMP header. The default is 56 (64 ICMP data bytes). |
| `source` *<ip-addr>* | The IP address of a configured IP interface to use as the source in the IP header of the ping packet. |
| `timeout` *<1-65535>* | The time in seconds to wait for echo replies if the ARP entry is present, before reporting that no reply was received. If no ARP entry is present, it does not wait. |
| `tos` *<0-255>* | The value of the type of service in the IP header. |
| `vrf` | Apply the command to the specified VRF instance. |
| *<vrf-name>* | The name of the VRF instance. |

**Mode** User Exec and Privileged Exec

**Example** To ping the IP address 10.10.0.5 use the following command:

```
awplus# ping 10.10.0.5
```

**Example (VRF-lite)**

To ping the IP address 10.10.0.5 from VRF instance 'red', use the following command:

```
awplus# ping vrf red 10.10.0.5
```

***NOTE:*** *Unless a cross-domain static or leaked route exists to the destination IP address, you must run this command from within the same routing domain as the address being pinged.*

**Command changes**

Version 5.4.6-2.1: VRF-lite support added.

# show arp

**Overview** Use this command to display entries in the ARP routing and forwarding table—the ARP cache contains mappings of IP addresses to physical addresses for hosts. To have a dynamic entry in the ARP cache, a host must have used the ARP protocol to access another host.

For information on filtering and saving command output, see the "Getting Started with AlliedWare Plus" Feature Overview and Configuration Guide.

**Syntax**

```
show arp
```

**Syntax (VRF-lite)**

```
show arp [global|security|vrf <vrf-name>]
```

| Parameter | Description |
|---|---|
| `global` | When VRF-lite is configured, apply this command to the global routing and forwarding table |
| `vrf` | Apply this command to the specified VRF instance. |
| `<vrf-name>` | The VRF instance name |

**Mode** User Exec and Privileged Exec

**Usage notes** Running this command with no additional parameters will display all entries in the ARP routing and forwarding table.

With VRF-lite configured, and no additional parameters entered, the command output displays all entries, listed by their VRF instance. By adding either a specific VRF instance or global parameter entry, you can selectively list ARP entries by their membership of a specific VRF instance.

**Example** To display all ARP entries in the ARP cache, use the following command:

```
awplus# show arp
```

**Output** Figure 23-3: Example output from the **show arp** command

```
awplus#show arp
IP Address       LL Address       Interface  Port         Type
192.168.27.10    192.168.4.1      vlan1      port1.0.1    dynamic
192.168.27.100   0000.daaf.cd24   vlan1      port1.0.2    dynamic
192.168.1.100    192.168.20.1     vlan2      port1.0.3    static
```

**Example (VRF-lite)** To display the dynamic ARP entries in the global routing instance, use the command:

```
awplus# show arp global
```

**Output** Figure 23-4: Example output from the **show arp global** command

```
awplus#show arp global
IP Address      LL Address      Interface    Port       Type
192.168.10.2    0015.77ad.fad8  vlan1        port1.0.1  dynamic
192.168.20.2    0015.77ad.fa48  vlan2        port1.0.2  dynamic
192.168.1.100   00d0.6b04.2a42  vlan2        port1.0.3  static
```

**Example (VRF-lite)** To display the dynamic ARP entries for a VRF instance 'red', use the command:

```
awplus# show arp vrf red
```

**Output** Figure 23-5: Example output from the **show arp vrf red** command

```
awplus# show arp vrf red
[VRF: red]
  IP Address      LL Address      Interface    Port       Type
  192.168.10.2    0015.77ad.fad8  vlan1        port1.0.1  dynamic
```

**Table 24:** Parameters in the output of the **show arp** command

| Parameter | Meaning |
|---|---|
| IP Address | IP address of the network device this entry maps to. |
| LL Address | Hardware address of the network device. |
| Interface | Interface over which the network device is accessed. |
| Port | Physical port that the network device is attached to. |
| Type | Whether the entry is a static or dynamic entry. Static entries are added using the arp command. Dynamic entries are learned from ARP request/reply message exchanges. |
| VRF | The name of the VRF instance. The VRF-lite components only display when VRF-lite is configured. |

**Related commands**

arp

clear arp-cache

ip vrf

**Command changes**

Version 5.4.6-2.1: VRF-lite support added.

Version 5.4.9-0.1: Link layer addresses now shown as the hardware address (MAC Address output parameter has been renamed to LL Address).

# show debugging ip packet

**Overview** Use this command to see what debugging is turned on for IP interfaces. IP interface debugging is set using the **debug ip packet interface** command.

For information on filtering and saving command output, see the "Getting Started with AlliedWare Plus" Feature Overview and Configuration Guide.

**Syntax**

```
show debugging ip packet
```

**Mode** User Exec and Privileged Exec

**Example** To display the IP interface debugging status when the terminal monitor is off, use the commands:

```
awplus# terminal no monitor
awplus# show debugging ip packet
```

**Output** Figure 23-6: Example output from the **show debugging ip packet** command with **terminal monitor** off

```
awplus#terminal no monitor
awplus#show debugging ip packet
IP debugging status:
interface all tcp (stopped)
interface vlan1 arp verbose (stopped)
```

**Example** To display the IP interface debugging status when the terminal monitor is on, use the commands:

```
awplus# terminal monitor
awplus# show debugging ip packet
```

**Output** Figure 23-7: Example output from the **show debugging ip packet** command with **terminal monitor** on

```
awplus#terminal monitor
awplus#show debugging ip packet
IP debugging status:
interface all tcp (running)
interface vlan1 arp verbose (running)
```

**Related commands**

debug ip packet interface

terminal monitor

# show ip flooding-nexthops

**Overview** Use this command to display the static and dynamic ARP entries in the ARP cache that flood packets to multiple ports.

When VRF-lite is configured, you can apply this command to a specific VRF instance.

**Syntax**

```
show ip flooding-nexthops
```

**Syntax (VRF-lite)**

```
show ip flooding-nexthops [vrf <vrf-name>|global]
```

| Parameter | Description |
|---|---|
| `vrf <vrf-name>` | VRF instance |
| `global` | Global Routing/Forwarding table |

**Mode** User Exec and Privileged Exec

**Usage notes** To display the flooding nexthop entries associated with a VRF instance, use the **show ip flooding-nexthops vrf** command in User Exec and Privileged Exec mode.

To display the entries in the global ARP table only, use the **show ip flooding-nexthop global** command.

**Example** To display all of the flooding nexthop entries in the ARP cache, use the command:

```
awplus# show ip flooding-nexthops
```

**Output** Figure 23-8: Example output from **show ip flooding-nexthops**

```
awplus#show ip flooding-nexthops
IP Address      MAC Address     Interface         Flooding Mode    Type
11.11.11.10     0300.0000.0011  vlan1             port-group       static
[VRF: test]
IP Address      MAC Address     Interface         Flooding Mode    Type
10.10.10.10     0100.0000.0000  vlan2             port-group       static
```

**Related commands** show arp

**Command changes** Version 5.4.8-2.1: command added

# show ip forwarding

**Overview** Use this command to display the IP forwarding status.

**Syntax** `show ip forwarding`

**Mode** User Exec and Privileged Exec

**Example** `awplus# show ip forwarding`

**Output** Figure 23-9: Example output from the **show ip forwarding** command

```
awplus#show ip forwarding
IP forwarding is on
```

**Related commands** ip forwarding

# show ip interface

**Overview** Use this command to display information about interfaces and the IP addresses assigned to them. To display information about a specific interface, specify the interface name with the command.

For information on filtering and saving command output, see the "Getting Started with AlliedWare Plus" Feature Overview and Configuration Guide.

**Syntax**

```
show ip interface [<interface-list>] [brief]
```

| Parameter | Description |
|---|---|
| *<interface-list>* | The interfaces to display information about. An interface-list can be:<br>• a PPP interface (e.g. ppp0)<br>• an Eth interface (e.g. eth1)<br>• an 802.1Q Ethernet sub-interface (e.g. eth1.10, where '10' is the VLAN ID specified by the **encapsulation dot1q** command)<br>• a VLAN (e.g. vlan2)<br>• a bridge interface (e.g. br0)<br>• a tunnel interface (e.g. tunnel0)<br>• a WWAN interface (e.g wwan0)<br>• the loopback interface (lo)<br>• a continuous range of interfaces, separated by a hyphen (e.g. ppp2-4)<br>• a comma-separated list (e.g. ppp0,ppp2-4). Do not mix interface types in a list.<br>The specified interfaces must exist. |

**Mode** User Exec and Privileged Exec

**Examples** To show the IP addresses assigned to ppp0, use the command:

```
awplus# show ip interface ppp0 brief
```

**Output** Figure 23-10: Example output from the **show ip interface brief** command

```
Interface              IP-Address       Status           Protocol
port1.0.1              unassigned       admin up         down
...
vlan1                  192.168.1.1      admin up         running
...
```

# show ip interface vrf

**Overview** Use this command to display protocol and status information about configured interfaces and their assigned IP addresses in VRF instances.

For information on filtering and saving command output, see the "Getting Started with AlliedWare Plus" Feature Overview and Configuration Guide.

**Syntax**

```
show ip interface [vrf <vrf-name>|global]
```

| Parameter | Description |
|---|---|
| `vrf` | A VRF instance. |
| `<vrf-name>` | The name of a specific VRF instance. |
| `global` | The global routing and forwarding table. |

**Mode** User Exec and Privileged Exec

**Examples** To display all interfaces and IP addresses associated with a VRF instance 'red', use the command:

```
awplus# show ip interface vrf red
```

**Output** Figure 23-11: Example output from **show ip interface vrf red**

```
[VRF: red]
Interface            IP-Address         Status       Protocol
lo1                  unassigned         admin up     running
vlan1                192.168.10.1/24    admin up     running
```

**Example** To display all interfaces and IP addresses associated with all VRF instances, use the command:

```
awplus# show ip interface
```

**Output** Figure 23-12: Example output from the **show ip interface** with VRF-lite configured

```
Interface              IP-Address         Status         Protocol
eth0                   unassigned         admin up       down
lo                     unassigned         admin up       running
vlan1                  192.168.1.1/24     admin up       running
vlan4                  172.30.4.43/24     admin up       down

[VRF: red]
Interface              IP-Address         Status
Protocol
lo1                    unassigned         admin up       running

[VRF: blue]
Interface              IP-Address         Status
Protocol
lo2                    unassigned         admin up       running
```

**Command changes** Version 5.4.6-2.1: VRF-lite support added.

# show ip sockets

**Overview** Use this command to display information about the IP or TCP sockets that are present on the device. It includes TCP and UDP listen sockets, and displays the associated IP address and port.

The information displayed for established TCP sessions includes the remote IP address, port, and session state. Raw IP protocol listen socket information is also displayed for protocols such as VRRP and ICMP6, which are configured to receive IP packets with the associated protocol number.

For information on filtering and saving command output, see the "Getting Started with AlliedWare Plus" Feature Overview and Configuration Guide.

**Syntax** `show ip sockets`

**Mode** Privileged Exec

**Usage notes** Use this command to verify that the socket being used is opening correctly. If there is a local and remote endpoint, a connection is established with the ports indicated.

Note that this command does not display sockets that are used internally for exchanging data between the various processes that exist on the device and are involved in its operation and management. It only displays sockets that are present for the purposes of communicating with other external devices.

**Example** To display IP sockets currently present on the device, use the command:

```
awplus# show ip sockets
```

**Output** Figure 23-13: Example output from **show ip sockets**

```
Socket information

Not showing 40 local connections
Not showing 7 local listening ports

Typ Local Address           Remote Address          State
tcp 0.0.0.0:111             0.0.0.0:*               LISTEN
tcp 0.0.0.0:80              0.0.0.0:*               LISTEN
tcp 0.0.0.0:23              0.0.0.0:*               LISTEN
tcp 0.0.0.0:443             0.0.0.0:*               LISTEN
tcp 0.0.0.0:4743            0.0.0.0:*               LISTEN
tcp 0.0.0.0:873             0.0.0.0:*               LISTEN
tcp :::23                   :::*                    LISTEN
udp 0.0.0.0:111             0.0.0.0:*
udp 226.94.1.1:5405         0.0.0.0:*
udp 0.0.0.0:161             0.0.0.0:*
udp :::161                  :::*
raw 0.0.0.0:112             0.0.0.0:*               112
raw :::58                   :::*                    58
raw :::112                  :::*                    112
```

Table 23-1: Parameters in the output from **show ip sockets**

| Parameter | Description |
|---|---|
| `Not showing <number> local connections` | This field refers to established sessions between processes internal to the device, that are used in its operation and management. These sessions are not displayed as they are not useful to the user. <number> is some positive integer. |
| `Not showing <number> local listening ports` | This field refers to listening sockets belonging to processes internal to the device, that are used in its operation and management. They are not available to receive data from other devices. These sessions are not displayed as they are not useful to the user. <number> is some positive integer. |
| `Typ` | This column displays the type of the socket. Possible values for this column are:<br>`tcp` : IP Protocol 6<br>`udp` : IP Protocol 17<br>`raw` : Indicates that socket is for a non port-orientated protocol (i.e. a protocol other than TCP or UDP) where all packets of a specified IP protocol type are accepted. For raw socket entries the protocol type is indicated in subsequent columns. |
| `Local Address` | For TCP and UDP listening sockets this shows the destination IP address and destination TCP or UDP port number for which the socket will receive packets. The address and port are separated by ':'. If the socket will accept packets addressed to any of the device's IP addresses, the IP address will be 0.0.0.0 for IPv4 or :: for IPv6. For active TCP sessions the IP address will display which of the devices addresses the session was established with. For raw sockets this displays the IP address and IP protocol for which the socket will accept IP packets. The address and protocol are separated by ':'. If the socket will accept packets addressed to any of the device's IP addresses, the IP address will be 0.0.0.0 for IPv4 and :: for IPv6. IP Protocol assignments are described at:www.iana.org/assignments/protocol-numbers |

Table 23-1: Parameters in the output from **show ip sockets** (cont.)

| Parameter | Description |
|---|---|
| `Remote Address` | For TCP and UDP listening sockets this shows the source IP address (either IPv4 or IPv6) and source TCP or UDP port number for which the socket will accept packets. The address and port are separated by ':'. If the socket will accept packets addressed from any IP address, the IP address will be 0.0.0.0 for IPv4 . This is the usual case for a listening socket. Normally for a listen socket any source port will be accepted. This is indicated by ". For active TCP sessions the IP address will display the remote address and port the session was established with. For raw sockets the entry in this column will be 0.0.0.0: for IPv4 . |
| `State` | This column shows the state of the socket. For TCP sockets this shows the state of the TCP state machine. For UDP sockets this column is blank. For raw sockets it contains the IP protocol number. The possible TCP states are:<br>`LISTEN`<br>`SYN-SENT`<br>`SYN-RECEIVED`<br>`ESTABLISHED`<br>`FIN-WAIT-1`<br>`FIN-WAIT-2`<br>`CLOSE-WAIT`<br>`CLOSING`<br>`LAST-ACK`<br>`TIME-WAIT`<br>`CLOSED`<br>RFC793 contains the TCP state machine diagram with Section 3.2 describing each of the states. |

# show ip traffic

**Overview** Use this command to display statistics regarding IP traffic sent and received by all interfaces on the device, showing totals for IP and IPv6 and then broken down into sub-categories such as TCP, UDP, ICMP and their IPv6 equivalents when appropriate.

For information on filtering and saving command output, see the "Getting Started with AlliedWare Plus" Feature Overview and Configuration Guide.

**Syntax** `show ip traffic`

**Mode** Privileged Exec

**Example** To display IP traffic statistics, use the command:

```
awplus# show ip traffic
```

**Output** Figure 23-14: Example output from the **show ip traffic** command

```
awplus#show ip traffic
IP:
    168475 packets received
    168475 delivered
    208099 sent
    35 dropped due to missing route
    22646409 bytes received
    126783216 bytes sent
    InCsumErrors 0
    InNoECTPkts 168475
    InECT1Pkts 0
    InECT0Pkts 0
    InCEPkts 0
    In107 Destination Unreachable
    Out11 Destination Unreachable
IPv6:
    14 packets received
    14 received packets delivered
    18 packets transmitted
...
ICMP6:
    4 messages sent
...
UDP6:
    Udp6RcvbufErrors 0
...
UDPLite6:
    UdpLite6RcvbufErrors 0
...
```

```
TCP:
    8 remote connections established
...
UDP:
    79797 datagrams received
...
UDPLite:
    InCsumErrors 0
...
```

# tcpdump

**Overview** Use this command to start a tcpdump, which gives the same output as the Unix-like **tcpdump** command to display TCP/IP traffic. Press `<ctrl> + c` to stop a running tcpdump.

**Syntax**

```
tcpdump <line>
```

**Syntax (VRF-lite)**

```
tcpdump [vrf <vrf-name>] <line>
```

| Parameter | Description |
|---|---|
| *<line>* | Specify the dump options. For more information on the options for this placeholder see http://www.tcpdump.org/tcpdump_man.html |
| `vrf` | Apply the command to the specified VRF instance. |
| *<vrf-name>* | The name of the VRF instance. |

**Mode** Privileged Exec

**Example** To start a tcpdump running to capture IP packets, enter the command:

```
awplus# tcpdump ip
```

**Example (VRF-lite)** To start a tcpdump on interface vlan2 associated with a VRF instance red, enter the command:

```
awplus# tcpdump vrf red vlan2
```

**Output** Figure 23-15: Example output from the **tcpdump** command

```
03:40:33.221337 IP 192.168.1.1 > 224.0.0.13: PIMv2, Hello,
length: 34
1 packets captured
2 packets received by filter
0 packets dropped by kernel
```

**Related commands** debug ip packet interface

**Command changes** Version 5.4.6-2.1: VRF-lite support added.

# traceroute

**Overview** Use this command to trace the route to the specified IPv4 host.

**Syntax**
```
traceroute {<ip-addr>|<hostname>}
```

**Syntax (VRF-lite)**
```
traceroute [vrf <vrf-name>] {<ip-addr>|<hostname>}
```

| Parameter | Description |
|---|---|
| *<ip-addr>* | The destination IPv4 address. The IPv4 address uses the format A.B.C.D. |
| *<hostname>* | The destination hostname. |
| `vrf` | Apply the command to the specified VRF instance. |
| *<vrf-name>* | The name of the VRF instance. |

**Mode** User Exec and Privileged Exec

**Example**
```
awplus# traceroute 10.10.0.5
```

**Example (VRF-lite)**
```
awplus# traceroute vrf red 192.168.0.1
```

**Command changes** Version 5.4.6-2.1: VRF-lite support added.

# undebug ip packet interface

**Overview** This command applies the functionality of the no debug ip packet interface command.

# 24 Domain Name Service (DNS) Commands

## Introduction

**Overview**

This chapter provides an alphabetical reference of commands used to configure Domain Name Service (DNS) features, including the following:

- DNS client
- DNS forwarding (DNS relay)
- Domain lists
- DDNS (Dynamic Domain Name System)

For more information about DNS and DDNS for AR-Series Firewalls, see the Domain Name System (DNS) for AlliedWare Plus AR-Series Firewalls Feature Overview and Configuration Guide.

**Command List**


- "accept-invalid-sslcert" on page 807
- "clear ip dns forwarding cache" on page 808
- "ddns enable" on page 809
- "ddns-update-method" on page 810
- "ddns-update now" on page 811
- "debug ddns" on page 812
- "debug ip dns forwarding" on page 813
- "description (Domain List)" on page 814
- "domain (Domain List)" on page 815
- "host-name (DDNS)" on page 816
- "ip ddns-update-method" on page 817
- "ip dns forwarding" on page 818
- "ip dns forwarding cache" on page 819
- "ip dns forwarding dead-time" on page 821

- "ip dns forwarding domain-list" on page 822
- "ip dns forwarding retry" on page 823
- "ip dns forwarding source-interface" on page 824
- "ip dns forwarding timeout" on page 825
- "ip domain-list" on page 826
- "ip domain-lookup" on page 827
- "ip domain-name" on page 829
- "ip name-server" on page 830
- "ip name-server preferred-order" on page 832
- "ipv6 ddns-update-method" on page 833
- "password (DDNS)" on page 834
- "ppp ipcp dns" on page 835
- "ppp ipcp dns suffix-list" on page 837
- "retry-interval (DDNS)" on page 839
- "show ddns-update-method status" on page 840
- "show debugging ip dns forwarding" on page 841
- "show hosts" on page 842
- "show ip dns forwarding" on page 843
- "show ip dns forwarding cache" on page 844
- "show ip dns forwarding server" on page 846
- "show ip domain-list" on page 848
- "show ip domain-name" on page 849
- "show ip name-server" on page 850
- "suppress-ipv4-updates (DDNS)" on page 852
- "undebug (DDNS)" on page 853
- "update-interval (DDNS)" on page 854
- "update-url (DDNS)" on page 855
- "use-ipv4-for-ipv6-updates (DDNS)" on page 858
- "username (DDNS)" on page 859

# accept-invalid-sslcert

**Overview**

Use this command to tell the dynamic DNS client to connect to an HTTPS server even if the server is producing an invalid SSL certificate (because it is self-signed, for a different host, expired, etc.).

Use the **no** variant of this command to return to the default.

**Syntax**

```
accept-invalid-sslcert
no accept-invalid-sslcert
```

**Default**

Not set

**Mode**

Dynamic DNS Update Method Configuration Mode

**Example**

If the HTTPS server you are using for the dynamic DNS configuration "test" does not have a valid SSL certificate, then use the following commands:

```
awplus# configure terminal
awplus(config)# ddns-update-method test
awplus(config-ddns-update-method)# accept-invalid-sslcert
```

**Command changes**

Version 5.5.0-0.1: command added

# clear ip dns forwarding cache

**Overview**

Use this command to clear the DNS Relay name resolver cache.

When using VRF-lite, use this command to clear the DNS Relay name resolver cache for either the whole device or for a specific VRF instance.

**Syntax**

```
clear ip dns forwarding cache
```

**Syntax (VRF-lite)**

```
clear ip dns [vrf <name>|global] forwarding cache
```

| Parameter | Description |
|---|---|
| `vrf` | Apply this command to the specified VRF instance. |
| `<name>` | The name of the specific VRF instance |
| `global` | When VRF-lite is configured, apply this command to the global routing and forwarding table. |

**Mode**

Privileged Exec

**Examples**

To clear all cached data, use the command:

```
awplus# clear ip dns forwarding cache
```

**Example (VRF-lite)**

To clear the cached data for VRF instance red, use the command:

```
awplus# clear ip dns vrf red forwarding cache
```

To clear the cached data for the default global VRF instance only, use the command:

```
awplus# clear ip dns global forwarding cache
```

**Related commands**

ip dns forwarding cache

**Command changes**

Version 5.4.6-2.1: VRF-lite support added.

# ddns enable

**Overview**

Use this command to enable DDNS updates.

Use the **no** variant of this command to disable DDNS updates.

**Syntax**

```
ddns enable
no ddns enable
```

**Default**

Disabled

**Mode**

Global Configuration

**Example**

To globally enable DDNS updates, use the commands:

```
awplus# configure terminal
awplus(config)# ddns enable
```

To globally disable DDNS updates, use the commands:

```
awplus# configure terminal
awplus(config)# no ddns enable
```

**Related commands**

ddns-update-method

**Command changes**

Version 5.4.7-0.1: command added

# ddns-update-method

**Overview**

Use this command to create a new DDNS update method and enter DDNS Update Method Configuration mode.

Use the **no** variant of this command to remove a DDNS update method.

**Syntax**

```
ddns-update-method <method-name>
no ddns-update-method <method-name>
```

| Parameter | Description |
|---|---|
| *<method-name>* | The name of the DDNS method. |

**Default**

None

**Mode**

Global Configuration

**Example**

To create a method named "dyndns", use the commands:

```
awplus# configure terminal
awplus(config)# ddns-update-method dyndns
awplus(config-ddns-update-method)#
```

**Related commands**

ddns enable

ddns-update now

debug ddns

host-name (DDNS)

ip ddns-update-method

ipv6 ddns-update-method

password (DDNS)

retry-interval (DDNS)

show ddns-update-method status

suppress-ipv4-updates (DDNS)

undebug (DDNS)

update-interval (DDNS)

update-url (DDNS)

use-ipv4-for-ipv6-updates (DDNS)

username (DDNS)

**Command changes**

Version 5.4.7-0.1: command added

# ddns-update now

**Overview** Use this command to manually update DDNS methods.

**Syntax**

```
ddns-update now
ddns-update method <method-name> now
```

| Parameter | Description |
|---|---|
| *<method-name>* | The DDNS update method name to use for the manual update. |

**Default** None

**Mode** Privileged Exec

**Usage notes** When no method name is entered, all DDNS update methods are updated. If a method name is specified, then only that method will update.

**Example** To manually update all DDNS update methods, use the command:

```
awplus# ddns-update now
```

To manually update the method “dyndns”, use the command:

```
awplus# ddns-update method dyndns now
```

**Related commands** ddns-update-method

**Command changes** Version 5.4.7-0.1: command added

# debug ddns

**Overview**

Use this command to enable debugging for the DDNS process.

Use the **no** variant of this command to disable debugging for the DDNS process.

**Syntax**

```
debug ddns
no debug ddns
```

**Default**

Disabled

**Mode**

Privileged Exec

**Example**

To enable debugging for the DDNS process, use the command:

```
awplus# debug ddns
```

To disable debugging for the DDNS process, use the command:

```
awplus# no debug ddns
```

**Related commands**

ddns-update-method

undebug (DDNS)

**Command changes**

Version 5.4.7-0.1: command added

# debug ip dns forwarding

**Overview**

Use this command to enable DNS Relay debugging.

Use the **no** variant of this command to disable DNS Relay debugging.

**Syntax**

```
debug ip dns forwarding
no debug ip dns forwarding
```

**Default**

DNS Relay debugging is disabled by default.

**Mode**

Privileged Exec

**Examples**

To enable DNS forwarding debugging, use the commands:

```
awplus# debug ip dns forwarding
```

To disable DNS forwarding debugging, use the commands:

```
awplus# no debug ip dns forwarding
```

**Related commands**

ip dns forwarding

show debugging ip dns forwarding

# description (Domain List)

**Overview**

Use this command to give a description to a domain-list.

Use the **no** variant of this command to delete the description.

**Syntax**

```
description <text>
no description
```

| Parameter | Description |
|---|---|
| *<text>* | Description string, 128 characters maximum. The string may contain spaces. |

**Mode**

Domain List Mode

**Usage notes**

When creating a domain-list, it is helpful to write a short description of what the list is to be used for.

**Examples**

To add a description to a domain list:, use the commands:

```
awplus# configure terminal
awplus(config)# ip dns forwarding domain-list mydomains
awplus(config-domain-list)# description This is a useful
description of my domain list
```

To delete the description, use the commands:

```
awplus# configure terminal
awplus(config)# ip dns forwarding domain-list mydomains
awplus(config-domain-list)# no description
```

**Related commands**

ip dns forwarding domain-list

# domain (Domain List)

**Overview**

Use this command to add a domain to a domain list.

Use the **no** variant of this command to delete the domain.

**Syntax**

```
domain <domain-string>
no domain <domain-string>
```

| Parameter | Description |
|---|---|
| *<domain-string>* | • A domain name must only contain a-z, A-Z, 0-9, '-' (en-dash) and '.'(period) characters.<br>• Each sub-section of the domain must not start or end with the '-' character.<br>• Each sub-section must have no more than 64 characters including the '.'.<br>• The last section must not have a '.' at the end.<br>• The whole domain must be less than 254 characters long. |

**Mode**

Domain List Mode

**Usage notes**

Domain lists are objects that contain unsorted lists of domain names. After a domain list has been created, you can use this command to add domains to the domain list. There is no limit on the number of domains that can be added to a domain list.

**Examples**

To add the domain "acme-solutions.com" to a domain list, use the commands:

```
awplus# configure terminal
awplus(config)# ip dns forwarding domain-list acme-corporation
awplus(config-domain-list)# domain acme-solutions.com
```

To delete the domain, use the commands:

```
awplus# configure terminal
awplus(config)# ip dns forwarding domain-list acme-corporation
awplus(config-domain-list)# no domain acme-solutions.com
```

**Related commands**

ip dns forwarding domain-list

# host-name (DDNS)

**Overview**

Use this command to add a host name for the current DDNS update method.

***NOTE:*** *A DDNS update method can only have one host name.*

Use the **no** variant of this command to remove the host name from the current DDNS update method.

**Syntax**

```
host-name <host-name>
no host-name
```

| Parameter | Description |
|---|---|
| *<host-name>* | The name of the host to be configured in conjunction with the user name and password. |

**Default**

None

**Mode**

DDNS Update Method Configuration

**Example**

To add the host name “test.dyndns.org” for the DDNS update method “dyndns”, use the commands:

```
awplus# configure terminal
awplus(config)# ddns-update-method dyndns
awplus(config-ddns-update-mthod)# host-name test.dyndns.org
```

To remove the host name “test.dyndns.org” from the DDNS update method “dyndns”, use the commands:

```
awplus# configure terminal
awplus(config)# ddns-update-method dyndns
awplus(config-ddns-update-mthod)# no host-name
```

**Related commands**

ddns-update-method

**Command changes**

Version 5.4.7-0.1: command added

# ip ddns-update-method

**Overview**

Use this command to enable an IPv4 interface to update DDNS with the specified DDNS update method.

Use the **no** variant of this command to disable an IPv4 interface to update DDNS with the specified DDNS update method.

**Syntax**

```
ip ddns-update-method <method-name>
no ip ddns-update-method <method-name>
```

| Parameter | Description |
|---|---|
| *<method-name>* | A name given to a DDNS update method. |

**Default**

None

**Mode**

Interface Configuration

**Usage notes**

A DDNS update method cannot be attached to multiple interfaces, however multiple DDNS update methods can be assigned to the same interface.

**Example**

To enable IPv4 DDNS updates for a DDNS update method named “dyndns” using interface eth1, use the commands:

```
awplus# configure terminal
awplus(config)# interface eth1
awplus(config-if)# ip ddns-update-method dyndns
```

To disable IPv4 DDNS updates for a DDNS update method named “dyndns” using interface eth1, use the commands:

```
awplus# configure terminal
awplus(config)# interface eth1
awplus(config-if)# no ip ddns-update-method dyndns
```

**Related commands**

ddns-update-method

**Command changes**

Version 5.4.7-0.1: command added

# ip dns forwarding

**Overview**

Use this command to enable DNS Relay, the forwarding of incoming DNS queries for IP hostname-to-address translation.

Use the **no** variant of this command to disable the forwarding of incoming DNS queries for IP hostname-to-address translation.

**Syntax**

```
ip dns forwarding
no ip dns forwarding
```

**Default**

The forwarding of incoming DNS query packets is disabled by default.

**Mode**

Global Configuration

**Usage notes**

DNS Relay is independent of the configuration of ip domain-lookup (which is enabled by default). If ip domain-lookup is disabled, but DNS Relay is enabled, the router will continue to forward DNS queries by hosts in the network to its configured name-servers.

See the ip dns forwarding dead-time command used with this command.

***NOTE:*** *When running VRF-lite, the DNS Relay functions will apply separately within each VRF instance.*

**Examples**

To enable the forwarding of incoming DNS query packets, use the commands:

```
awplus# configure terminal
awplus(config)# ip dns forwarding
```

To disable the forwarding of incoming DNS query packets, use the commands:

```
awplus# configure terminal
awplus(config)# no ip dns forwarding
```

**Related commands**

clear ip dns forwarding cache

debug ip dns forwarding

ip dns forwarding cache

ip dns forwarding dead-time

ip dns forwarding retry

ip dns forwarding source-interface

ip dns forwarding timeout

ip domain-lookup

ip name-server

show ip dns forwarding

show ip dns forwarding cache

show ip dns forwarding server

# ip dns forwarding cache

**Overview**

Use this command to set the DNS Relay name resolver cache size and cache entry lifetime period. The DNS Relay name resolver cache stores the mappings between domain names and IP addresses.

Use the **no** variant of this command to set the default DNS Relay name resolver cache size and cache entry lifetime period.

Note that the lifetime period of the cache entry can be overwritten by the time-out period of the DNS reply from the DNS server if the time-out period of the DNS reply from the DNS server is smaller than the configured time-out period. The time-out period of the cache entry will only be used when the time-out period of the DNS reply from the DNS server is bigger than the time-out period configured on the device.

**Syntax**

```
ip dns forwarding cache [size <0-10000>] [timeout <60-3600>]
no ip dns forwarding cache [size|timeout]
```

| Parameter | Description |
|---|---|
| *<0-10000>* | Number of entries in the DNS Relay name resolver cache. |
| *<60-3600>* | Timeout value in seconds.<br>Note that when running VRF-lite the number of entries configured will apply to each VRF instance. |

**Default**

The default cache size is 0 (no entries) and the default lifetime is 1800 seconds.

**Mode**

Global Configuration

**Examples**

To set the cache size to `10` entries and the lifetime to `500` seconds, use the commands:

```
awplus# configure terminal
awplus(config)# ip dns forwarding cache size 10 time 500
```

To set the cache size to the default, use the commands:

```
awplus# configure terminal
awplus(config)# no ip dns forwarding cache size
```

**Related commands**

clear ip dns forwarding cache

debug ip dns forwarding

ip dns forwarding

show ip dns forwarding

show ip dns forwarding cache

**Command changes** Version 5.4.8-1.1: maximum cache limit increased to 10000

# ip dns forwarding dead-time

**Overview**

Use this command to set the time period in seconds when the device stops sending any DNS requests to an unresponsive server and all retries set using ip dns forwarding retry are used. This time period is the DNS forwarding dead-time. The device stops sending DNS requests at the DNS forwarding dead-time configured and when all of the retries are used.

Use the **no** variant of this command to restore the default DNS forwarding dead-time value of 3600 seconds.

**Syntax**

```
ip dns forwarding dead-time <60-43200>
no ip dns forwarding retry
```

**Default**

The default time to stop sending DNS requests to an unresponsive server is 3600 seconds.

**Mode**

Global Configuration

**Usage notes**

See the ip dns forwarding retry command used with this command.

**Examples**

To set the DNS forwarding retry count to 50 and to set the DNS forwarding dead-time to 1800 seconds, use the commands:

```
awplus# configure terminal
awplus(config)# ip dns forwarding dead-time 1800
awplus(config)# ip dns forwarding retry 50
```

To reset the DNS retry count to the default of 2 and the DNS forwarding dead-time to the default of 3600, use the commands:

```
awplus# configure terminal
awplus(config)# no ip dns forwarding dead-time
awplus(config)# no ip dns forwarding retry
```

**Related commands**

debug ip dns forwarding

ip dns forwarding

ip dns forwarding retry

show ip dns forwarding

show ip dns forwarding server

# ip dns forwarding domain-list

**Overview**

Use this command to create a domain-list that can be used as a suffix-list for DNS lookups. This command puts the device into a new mode where subsequent commands can be entered. The new mode is "Domain List Configuration" mode.

Use the **no** variant of this command to delete the domain-list.

**Syntax**

```
ip dns forwarding domain-list <domain-list-name>
no ip dns forwarding domain-list <domain-list-name>
```

| Parameter | Description |
|---|---|
| *<domain-list-name>* | Name of the list. |

**Mode**

Global Configuration

**Usage notes**

The domain list can be used by features that need to match against domains. A domain list by itself does nothing; it must be attached to another feature to have functionality (like a prefix-list).For example, the domain list can be used as a suffix list on an DNS name-server. The DNS server can be either statically configured, or learned over a PPP connection.

Note that this command is separate from the **ip domain-list** command, which is used by DNS client to append a domain on to the end of a partial hostname to form a fully-qualified domain.

**Examples**

To create a domain list to include domains that are internal to the company such as "engineering.acme" or "intranet.acme", use the commands:

```
awplus# configure terminal
awplus(config)# ip dns forwarding domain-list corporatedomains
awplus(config-domain-list)# description internal network domain
awplus(config-domain-list)# domain engineering.acme
awplus(config-domain-list)# domain intranet.acme
```

To delete the domain list, use the commands:

```
awplus# configure terminal
awplus(config)# no ip dns forwarding domain-list
corporatedomains
```

**Related commands**

description (Domain List)

domain (Domain List)

# ip dns forwarding retry

**Overview**

Use this command to set the number of times DNS Relay will retry to forward DNS queries. The device stops sending DNS requests to an unresponsive server at the time set using the ip dns forwarding dead-time command and when all of the retries are used.

Use the **no** variant of this command to set the number of retries to the default of 2.

**Syntax**

```
ip dns forwarding retry <0-100>
no ip dns forwarding retry
```

**Default**

The default number of retries is 2 DNS requests to an unresponsive server.

**Mode**

Global Configuration

**Usage notes**

See the ip dns forwarding dead-time command used with this command.

**Examples**

To set the DNS forwarding retry count to `50` and to set the DNS forwarding dead-time to `1800` seconds, use the commands:

```
awplus# configure terminal
awplus(config)# ip dns forwarding retry 50
awplus(config)# ip dns forwarding dead-time 1800
```

To reset the DNS retry count to the default of 2 and the DNS forwarding dead-time to the default of `3600` seconds, use the commands:

```
awplus# configure terminal
awplus(config)# no ip dns forwarding retry
awplus(config)# no ip dns forwarding dead-time
```

**Related commands**

debug ip dns forwarding

ip dns forwarding

ip dns forwarding dead-time

show ip dns forwarding

# ip dns forwarding source-interface

**Overview**

Use this command to set the interface to use for forwarding and receiving DNS queries.

Use the **no** variant of this command to unset the interface used for forwarding and receiving DNS queries.

**Syntax**

```
ip dns forwarding source-interface <interface-name>
no ip dns forwarding source-interface
```

**Default**

The default is that no interface is set and the device selects the appropriate source IP address automatically.

**Mode**

Global Configuration

**Examples**

To set `vlan1` as the source interface for relayed DNS queries, use the commands:

```
awplus# configure terminal
awplus(config)# ip dns forwarding source-interface vlan1
```

To clear the source interface for relayed DNS queries, use the commands:

```
awplus# configure terminal
awplus(config)# no ip dns forwarding source-interface
```

**Related commands**

debug ip dns forwarding

ip dns forwarding

show ip dns forwarding

# ip dns forwarding timeout

**Overview**

Use this command to set the time period for the DNS Relay to wait for a DNS response.

Use the **no** variant of this command to set the time period to wait for a DNS response to the default of 3 seconds.

**Syntax**

```
ip dns forwarding timeout <0-3600>
no ip dns forwarding timeout
```

**Default**

The default timeout value is 3 seconds.

**Mode**

Global Configuration

**Examples**

To set the timeout value to 12 seconds, use the commands:

```
awplus# configure terminal
awplus(config)# ip dns forwarding timeout 12
```

To set the timeout value to the default of 3 seconds, use the commands:

```
awplus# configure terminal
awplus(config)# no ip dns forwarding timeout
```

**Related commands**

debug ip dns forwarding

ip dns forwarding

show ip dns forwarding

# ip domain-list

**Overview**

This command adds a domain to the DNS list. Domains are appended to incomplete host names in DNS requests. Each domain in this list is tried in turn in DNS lookups. This list is ordered so that the first entry you create is checked first.

The **no** variant of this command deletes a domain from the list.

**Syntax**

```
ip domain-list <domain-name>
no ip domain-list <domain-name>
```

| Parameter | Description |
|---|---|
| *<domain-name>* | Domain string, for example "company.com". |

**Mode**

Global Configuration

**Usage notes**

If there are no domains in the DNS list, then your device uses the domain specified with the ip domain-name command. If any domain exists in the DNS list, then the device does not use the domain set using the **ip domain-name** command.

**Example**

To add the domain `example.net` to the DNS list, use the following commands:

```
awplus# configure terminal
awplus(config)# ip domain-list example.net
```

**Related commands**

ip domain-lookup

ip domain-name

show ip domain-list

# ip domain-lookup

**Overview**

This command enables the DNS client on your device. This allows you to use domain names instead of IP addresses in commands. The DNS client resolves the domain name into an IP address by sending a DNS inquiry to a DNS server, specified with the ip name-server command.

It is possible to configure the DNS client to use the DNS relay to resolve domain lookups originating from the device itself. This configuration may be preferred, as the DNS relay provides additional functionality that is not available in the DNS client, such as caching, a configurable timeout length, and other options.

The **no** variant of this command disables the DNS client. The client will not attempt to resolve domain names. You must use IP addresses to specify hosts in commands.

**Syntax**

```
ip domain-lookup [via-relay]
no ip domain-lookup
```

| Parameter | Description |
|---|---|
| via-relay | Perform resolution via DNS relay |

**Mode**

Global Configuration

**Usage notes**

The client is enabled by default. However, it does not attempt DNS inquiries unless there is a DNS server configured.

**Examples**

To enable the DNS client on your device, use the following commands:

```
awplus# configure terminal
awplus(config)# ip domain-lookup
```

To configure the DNS client to perform resolution via the DNS relay, use the following commands:

```
awplus# configure terminal
awplus(config)# ip domain-lookup via-relay
awplus(config)# ip dns forwarding
```

To disable the DNS client on your device, use the following commands:

```
awplus# configure terminal
awplus(config)# no ip domain-lookup
```

**Related commands**

ip domain-list

ip domain-name

ip name-server

show hosts

show ip name-server

**Command changes**

Version 5.4.8-1.1: via-relay parameter added

# ip domain-name

**Overview**

This command sets a default domain for the DNS. The DNS client appends this domain to incomplete host-names in DNS requests.

The **no** variant of this command removes the domain-name previously set by this command.

**Syntax**

```
ip domain-name <domain-name>
no ip domain-name <domain-name>
```

**Mode**

Global Configuration

**Usage notes**

If there are no domains in the DNS list (created using the ip domain-list command) then your device uses the domain specified with this command. If any domain exists in the DNS list, then the device does not use the domain configured with this command.

When your device is using its DHCP client for an interface, it can receive Option 15 from the DHCP server. This option replaces the domain name set with this command.

**Example**

To configure the domain name, enter the following commands:

```
awplus# configure terminal
awplus(config)# ip domain-name company.com
```

**Related commands**

ip domain-list

show ip domain-list

show ip domain-name

# ip name-server

**Overview**

Use this command to add IPv4 or IPv6 DNS server addresses. The DNS client on your device sends DNS queries to IP addresses in this list when trying to resolve a host name. Host names cannot be resolved until you have added at least one server to this list. A maximum of three name servers can be added to this list.

If you are running VRF-lite, you can add IPv4 or IPv6 DNS server addresses for either the global VRF instance or for a specific VRF instance. Host names cannot be resolved from within a VRF instance until you have added at least one name-server to that VRF instance.

The **no** variant of this command removes the specified DNS name-server address.

**Syntax**

```
ip name-server <ip-addr> [suffix-list <domain-list>]
no ip name-server <ip-addr> [suffix-list]
```

**Syntax (VRF-lite)**

```
ip name-server [vrf <name>] <ip-addr>
no ip name-server [vrf <name>] <ip-addr>
```

| Parameter | Description |
|---|---|
| *<ip-addr>* | The IP address of the DNS server that is being added to the name server list. The address is entered in the form A.B.C.D for an IPv4 address, or in the form X:X::X:X for an IPv6 address.<br>The order that you enter the servers in, is the order in which they will be used. |
| `vrf` | Apply this command to the specified VRF instance. |
| *<name>* | The name of the specific VRF instance |
| `suffix-list` | Specify domain suffixes that should be directed to this name server |
| *<domain-list>* | The name of the DNS domain-list |

**Mode**

Global Configuration

**Usage notes**

To allow the device to operate as a DNS proxy, your device must have learned about a DNS name-server to forward requests to. Name-servers can be learned through the following means:

- Manual configuration, using the **ip name-server** command
- Learned from DHCP server with Option 6
- Learned over a PPP tunnel if the neighbor advertises the DNS server

Use this command to statically configure a DNS name-server for the device to use.

The order that you enter the servers in, is the order in which they will be used.

For more information about PPP and DNS, see the PPP Feature Overview and Configuration Guide.

**Examples**

To allow a device to send DNS queries to a DNS server with the IPv4 address 10.10.10.5, use the commands:

```
awplus# configure terminal
awplus(config)# ip name-server 10.10.10.5
```

To enable your device to send DNS queries to a DNS server with the IPv6 address 2001:0db8:010d::1, use the commands:

```
awplus# configure terminal
awplus(config)# ip name-server 2001:0db8:010d::1
```

For DNS relay, to direct DNS lookups for domains with suffixes of "engineering.acme" or "intranet.acme" to an internal corporate name-server, use the commands:

```
awplus# configure terminal
awplus(config)# ip dns forwarding domain-list corporatedomains
awplus(config-domain-list)# description Our internal network
domains; do not send DNS requests to internet
awplus(config-domain-list)# domain engineering.acme
awplus(config-domain-list)# domain intranet.acme
awplus(config-domain-list)# exit
awplus(config)# ip name-server 172.16.0.1 suffix-list
corporatedomains
```

**Example (VRF-lite)**

To enable your switch to send DNS queries (on VRF instance RED) to a DNS server with the IPv4 address 10.10.10.5 use the commands:

```
awplus# configure terminal
awplus(config)# ip name-server vrf RED 10.10.10.5
```

**Related commands**

ip domain-list

ip domain-lookup

ip domain-name

show ip dns forwarding cache

show ip name-server

**Command changes**

Version 5.4.6-2.1: VRF-lite support added to AR-series devices.

# ip name-server preferred-order

**Overview**

Use this command to choose between using statically-configured DNS servers or dynamically-learned DNS servers.

Use the **no** variant of this command to set the DNS servers back to the default setting of dynamic.

**Syntax**

```
ip name-server preferred-order {dynamic|static}
no ip name-server preferred-order
```

| Parameter | Description |
|---|---|
| dynamic | Use dynamically learned DNS servers first. |
| static | Use statically configured DNS servers first. |

**Default**

dynamic

**Mode**

Global Configuration

**Usage notes**

This command is used to choose which DNS server set to use first. Select either the **dynamic** or **static** parameter.

**Examples**

To configure the preference to use static servers first, use the commands:

```
awplus# configure terminal
awplus(config)# ip name-server preferred-order static
```

To configure the preference to use dynamically-learned servers first, use the commands:

```
awplus# configure terminal
awplus(config)# ip name-server preferred-order dynamic
```

or

```
awplus# configure terminal
awplus(config)# no ip name-server preferred-order
```

**Related commands**

ip address dhcp

ip name-server

ipv6 address dhcp

ppp ipcp dns

show ip name-server

**Command changes**

Version 5.4.9-0.1: command added

# ipv6 ddns-update-method

**Overview**

Use this command to enable an IPv6 interface to update DDNS with the specified DDNS update method.

Use the **no** variant of this command to disable an IPv6 interface to update DDNS with the specified DDNS update method.

**Syntax**

```
ipv6 ddns-update-method <method-name>
no ipv6 ddns-update-method <method-name>
```

| Parameter | Description |
|---|---|
| *<method-name>* | A name given to a DDNS update method. |

**Default**

None

**Mode**

Interface Configuration

**Usage notes**

A DDNS update method cannot be attached to multiple interfaces, however multiple DDNS update methods can be assigned to the same interface.

**Example**

To enable IPv6 DDNS updates for a DDNS update method named “dyndns” using interface eth1, use the following commands:

```
awplus# configure terminal
awplus(config)# interface eth1
awplus(config-if)# ipv6 ddns-update-method dyndns
```

To disable IPv6 DDNS updates for a DDNS update method named “dyndns” using interface eth1, use the following commands:

```
awplus# configure terminal
awplus(config)# interface eth1
awplus(config-if)# no ipv6 ddns-update-method dyndns
```

**Related commands**

ddns-update-method

**Command changes**

Version 5.4.7-0.1: command added

# password (DDNS)

**Overview**

Use this command to add a password to the current DDNS update method.

Use the **no** variant of this command to remove a password from the current DDNS update method.

**Syntax**

```
password <password>
no password
```

| Parameter | Description |
|---|---|
| *<password>* | The password to be configured in conjunction with the user name and host name. |

**Default**

None

**Mode**

DDNS Update Method Configuration

**Example**

To configure the password "test" for the method "dyndns", use the following commands:

```
awplus# configure terminal
awplus(config)# ddns-update-method dyndns
awplus(config-ddns-update-mthod)# password test
```

To remove the password "test" from the method "dyndns", use the following commands:

```
awplus# configure terminal
awplus(config)# ddns-update-method dyndns
awplus(config-ddns-update-mthod)# no password
```

**Related commands**

ddns-update-method

**Command changes**

Version 5.4.7-0.1: command added

# ppp ipcp dns

**Overview** Use this command to configure the primary and secondary DNS (Domain Name System) IP addresses for IPCP (Internet Protocol Control Protocol) on a given PPP interface.

Use the **no** variant of this command to remove the primary and secondary DNS IP addresses for IPCP on a given PPP interface, and remove any optional parameters configured for DNS.

**Syntax**

```
ppp ipcp dns [<primary> [<secondary>]][required|reject|request]
no ppp ipcp dns
```

| Parameter | Description |
|---|---|
| *<primary>* | Specify the primary DNS address for a given PPP interface to the peer. |
| *<secondary>* | Specify the secondary DNS address for a given PPP interface to the peer. |
| `required` | Request DNS addresses from the peer, and close the link if none is given. |
| `reject` | Reject negotiations with the peer (default). |
| `request` | Request DNS addresses from the peer. |

**Default** By default no IPCP DNS server request is sent to the peer.

**Mode** Interface Configuration

**Usage notes** Use the optional parameters to configure PPP IPCP DNS options for accepting, rejecting or requesting DNS addresses from the peer. Use the optional primary and secondary or primary only DNS server address placeholders to specify DNS server addresses to the peer.

The no variant of this command also stops IPCP DNS request messages being sent to the peer.

**Examples** To configure the PPP interface `ppp0` to require a DNS IP address from the peer, and close the link if a DNS IP address is not given, enter the below commands:

```
awplus# configure terminal
awplus(config)# interface ppp0
awplus(config-if)# ppp ipcp dns required
```

To configure the PPP interface `ppp0` to require a DNS IP address from the peer, enter the below commands:

```
awplus# configure terminal
awplus(config)# interface ppp0
awplus(config-if)# ppp ipcp dns request
```

To configure the PPP interface `ppp0` to reject a DNS IP address from the peer, enter the below commands:

```
awplus# configure terminal
awplus(config)# interface ppp0
awplus(config-if)# ppp ipcp dns reject
```

To configure the PPP interface `ppp0` to supply primary and secondary DNS server addresses to the peer, enter the below commands:

```
awplus# configure terminal
awplus(config)# interface ppp0
awplus(config-if)# ppp ipcp dns 10.1.1.2 10.1.1.3
```

To configure the PPP interface `ppp0` to supply a primary but not a secondary DNS server address to the peer, enter the below commands:

```
awplus# configure terminal
awplus(config)# interface ppp0
awplus(config-if)# ppp ipcp dns 10.1.1.2
```

**Related commands**

ip address negotiated

peer default ip address

peer neighbor-route

show running-config interface

# ppp ipcp dns suffix-list

**Overview** Use this command to configure a suffix-list to be associated with DNS name-servers learned over the PPP connection.

Use the **no** variant of this command to remove the suffix-list.

**Syntax**

```
ppp ipcp dns suffix-list <domain-list-name>
no ppp ipcp dns suffix-list
```

| Parameter | Description |
|---|---|
| *<domain-list-name>* | The name of the DNS domain-list |

**Mode** Interface Configuration

**Usage notes** A PPP connection can be configured to learn DNS servers from the remote peer by using the command ppp ipcp dns command.

This command allows a user to associate a domain-list to be used to match against the suffixes of incoming DNS requests. For example, a customer branch office may have a router that is used to give remote-access to their head office, over which they learn the IP address of the head office's DNS server. A domain list can be created that contains a suffix used for services internal to that company, for example, "example.lc". This domain-list is associated as a suffix-list to the PPP connection. So when the PPP connection is completed with the head office, users at the branch office that browse to "intranet.example.lc" will have the DNS request forwarded to the DNS server learned over the PPP connection. Without having the suffix-list configured, the DNS request for "intranet.example.lc" would instead be sent to the primary DNS server, which is likely to be the branch office's ISP, and they will simply respond with a negative reply, because .example.lc is not a globally routable domain.

**Examples** At a branch office, to direct DNS lookups for domains with suffixes of "engineering.acme" or "intranet.acme" to an internal corporate name-server run at head-office that was learned over a PPP connection, use the commands:

```
awplus# configure terminal
awplus(config)# ip dns forwarding domain-list corporatedomains
host(config-domain-list)# description Our internal network
domains; do not send DNS requests to internet
host(config-domain-list)# domain engineering.acme
host(config-domain-list)# domain intranet.acme
awplus(config)# interface ppp0
awplus(config-if)# ppp ipcp dns required
awplus(config-if)# ppp ipcp dns suffix-list corporatedomains
```

**Related commands**

ip dns forwarding domain-list

ppp ipcp dns

# retry-interval (DDNS)

**Overview**

Use this command to enable DDNS update retries. Retries are attempted after a DDNS update fails after the specified interval. If the DDNS update keeps failing, then no more than the specified maximum retries are attempted.

***NOTE:*** *The retry interval is used for one DDNS update at one time, so if an update is not complete within the specified interval, an update will not begin until it has completed.*

Use the **no** variant of this command to disable DDNS update retires.

**Syntax**

```
retry-interval <1-3888000> maximum-retries <1-100>
no retry-interval
```

| Parameter | Description |
|---|---|
| *<1-3888000>* | The retry interval in seconds (from 1 second to 4.5 days), after which a failed DDNS update will be retried. |
| *<1-100>* | The maximum number of times a retry is allowed. |

**Default**

Disabled

**Mode**

DDNS Update Method Configuration

**Usage notes**

If an update is triggered by another source, such as an IP address change or a manual update, then the retry counter will start again from the beginning.

**Example**

To enable DDNS update retry attempts every hour up to 5 times for the method “dyndns”, use the commands:

```
awplus# configure terminal
awplus(config)# ddns-update-method dyndns
awplus(config-ddns-update-method)# retry-interval 3600
maximum-retries 5
```

To disable DDNS update retry attempts for the method “dyndns”, use the commands:

```
awplus# configure terminal
awplus(config)# ddns-update-method dyndns
awplus(config-ddns-update-method)# no retry-interval
```

**Related commands**

ddns-update-method

**Command changes**

Version 5.4.7-0.1: command added

# show ddns-update-method status

**Overview** Use this command to show the status of the configured DDNS update methods.

**Syntax**

```
show ddns-update-method status
```

**Mode** User Exec and Privileged Exec

**Example** To display the status of DDNS update methods currently configured on your device, use the command:

```
awplus# show ddns-update-method status
```

**Output** Figure 24-1: Example output from **show ddns-update-method status**

```
awplus#show ddns-update-method status

Dynamic DNS updates are enabled

-----------------------------------------------------------------
Update Method Name    test
Hostname              test.dnsalias.org
IPv4 Interface        vlan2
IPv4 Address          192.168.10.100
IPv4 Status           Update succeeded
IPv4 Update Result    good 192.168.10.100
IPv6 Interface        vlan2
IPv6 Address          333::f195
IPv6 Status           Update succeeded
IPv6 Update Result    good 0333:0000:0000:0000:0000:0000:0000:f195
Last update           Last update Aug 25, 2019 06:54:24
```

**Related commands** ddns-update-method

**Command changes** Version 5.4.7-0.1: command added

# show debugging ip dns forwarding

**Overview** Use this command to see what debugging is turned on for DNS Relay. DNS Relay debugging is set using the **debug ip dns forwarding** command.

For information on filtering and saving command output, see the "Getting_Started with AlliedWare Plus" Feature Overview and Configuration_Guide.

**Syntax**

```
show debugging ip dns forwarding
```

**Mode** User Exec and Privileged Exec

**Example** To display the DNS Relay debugging status, use the command:

```
awplus# show debugging ip dns forwarding
```

**Output** Figure 24-2: Example output from the **show debugging ip dns forwarding** command:

```
awplus#show debugging ip dns forwarding

DNS Relay debugging status:
  debugging is on
```

**Related commands** debug ip dns forwarding

# show hosts

**Overview** This command shows the default domain, domain list, and name servers configured on your device.

For information on filtering and saving command output, see the "Getting Started with AlliedWare Plus" Feature Overview and Configuration Guide.

**Syntax** `show hosts`

**Mode** User Exec and Privileged Exec

**Example** To display the default domain, use the command:

```
awplus# show hosts
```

**Output** Figure 24-3: Example output from the **show hosts** command when **no ip domain-lookup** is configured

```
awplus#show hosts

Default domain is not set
Name/address lookup is disabled
```

Figure 24-4: Example output from the **show hosts** command when **ip domain-lookup** is configured

```
awplus#show hosts

Default domain is mycompany.com
Domain list: company.com
Name/address lookup uses domain service
Name servers are 10.10.0.2 10.10.0.88
```

Figure 24-5: Example output from the **show hosts** command when **ip domain-lookup via-relay** is configured

```
awplus#show hosts

Default domain is mycompany.com
Domain list: company.com
Name/address lookup uses domain relay service
Name servers are 10.10.0.2 10.10.0.88
```

**Related commands**

ip domain-list

ip domain-lookup

ip domain-name

ip name-server

# show ip dns forwarding

**Overview** Use this command to display the DNS Relay status.

**Syntax**

```
show ip dns forwarding
```

**Mode** User Exec and Privileged Exec

**Examples** To display the DNS Relay status, use the command:

```
awplus# show ip dns forwarding
```

**Output** Figure 24-6: Example output from the **show ip dns forwarding** command

```
awplus#show ip dns forwarding

Max-Retry       : 2
Timeout         : 3 second(s)
Dead-Time       : 3600 second(s)
Source-Interface: not specified
DNS Cache       : disabled
```

**Related commands** ip dns forwarding

# show ip dns forwarding cache

**Overview** Use this command to display the DNS Relay name resolver cache.

**Syntax**
```
show ip dns forwarding cache
```

**Syntax (VRF-lite)**
```
show ip dns [vrf <name>|global] forwarding cache
```

| Parameter | Description |
|---|---|
| `vrf` | Apply this command to the specified VRF instance. |
| *<name>* | The name of the specific VRF instance |
| `global` | When VRF-lite is configured, apply this command to the global routing and forwarding table. |

**Mode** User Exec and Privileged Exec

**Example** To display the DNS Relay name resolver cache, use the command:

```
awplus# show ip dns forwarding cache
```

**Output** Figure 24-7: Example output from the **show ip dns forwarding cache** command

```
awplus#show ip dns forwarding cache
IPv4 addresses in cache:     3
IPv6 addresses in cache:     0
Cache size: 1000
Host                                      Address                 Expires Flags
www.example.com                           172.16.1.1.                 180
mail.example.com                          www.example.com             180 CNAME
www.example.com                           172.16.1.1.                 180 REVERSE
mail.example.com                          172.16.1.5.                 180
```

**Example (VRF-lite)** To display the DNS Relay name resolver cache with output for VRF instance RED, use the command:

```
awplus# show ip dns vrf RED forwarding cache
```

**Output** Figure 24-8: Example output from the **show ip dns forwarding cache** command that includes output for VRF instance RED.

```
awplus#show ip dns vrf RED forwarding cache
IPv4 addresses in cache:     3
IPv6 addresses in cache:     0
Cache size: 1000
Host                                      Address                 Expires Flags
www.example.com                           172.16.1.1.                 180
mail.example.com                          www.example.com             180 CNAME
www.example.com                           172.16.1.1.                 180 REVERSE
mail.example.com                          172.16.1.5.                 180

[VRF: RED]
www.example2.com                           10.25.1.1.                 180
mail.example2.com                          www.example2.com           180 CNAME
www.example2.com                           10.25.1.1.                 180 REVERSE
mail.example2.com                          10.25.1.6.                 180
```

**Related commands**

ip dns forwarding cache

ip name-server

**Command changes**

Version 5.4.6-2.1: VRF-lite support added.

Version 5.4.8-1.1: additional cache counters added to output.

# show ip dns forwarding server

**Overview** Use this command to display the status of DNS forwarding name servers.

If you are running VRF, you can also use this command to display the status for DNS forwarding name servers operating on a specific VRF instance.

**Syntax**

```
show ip dns forwarding server
```

**Syntax (VRF-lite)**

```
show ip dns [vrf <name>|global] forwarding server
```

| Parameter | Description |
|---|---|
| `vrf` | Apply this command to the specified VRF instance. |
| `<name>` | The name of the specific VRF instance |
| `global` | When VRF-lite is configured, apply this command to the global routing and forwarding table. |
| `forwarding server` | Display information about the DNS forwarding name servers for either the switch (when not using VRF-lite) or for a specific VRF instance (when using VRF-lite). |

**Mode** User Exec and Privileged Exec

**Examples** To display the status of DNS Relay name servers, use the command:

```
awplus# show ip dns forwarding server
```

**Output** Figure 24-9: Example output from the **show ip dns forwarding server** command

```
awplus#show ip dns forwarding server

Servers            Forwards      Fails    Dead-Time
172.16.1.1             12          0       active
172.16.1.2              6          3         3900
```

**Example (VRF-lite)** To display the status of DNS Relay name-servers for VRF-lite instance red, use the command:

```
awplus# show ip dns vrf red forwarding server
```

**Output** Figure 24-10: Example output from the **show ip dns forwarding** server command

```
awplus#show ip dns forwarding server

[VRF: red]
Servers            Forwards      Fails    Dead-Time
172.16.1.1             12          0       active
172.16.1.2              6          3         3900
```

**Related commands**

ip dns forwarding

ip dns forwarding dead-time

**Command changes**

Version 5.4.6-2.1: VRF-lite support added.

# show ip domain-list

**Overview**

This command shows the domains configured in the domain list. The DNS client uses the domains in this list to append incomplete hostnames when sending a DNS inquiry to a DNS server.

For information on filtering and saving command output, see the "Getting Started with AlliedWare Plus" Feature Overview and Configuration Guide.

**Syntax**

```
show ip domain-list
```

**Mode**

User Exec and Privileged Exec

**Example**

To display the list of domains in the domain list, use the command:

```
awplus# show ip domain-list
```

**Output**

Figure 24-11: Example output from the **show ip domain-list** command

```
awplus#show ip domain-list
alliedtelesis.com
mycompany.com
```

**Related commands**

ip domain-list

ip domain-lookup

# show ip domain-name

**Overview**

This command shows the default domain configured on your device. When there are no entries in the DNS list, the DNS client appends this domain to incomplete hostnames when sending a DNS inquiry to a DNS server.

For information on filtering and saving command output, see the "Getting Started with AlliedWare Plus" Feature Overview and Configuration Guide.

**Syntax**

```
show ip domain-name
```

**Mode**

User Exec and Privileged Exec

**Example**

To display the default domain configured on your device, use the command:

```
awplus# show ip domain-name
```

**Output**

Figure 24-12: Example output from the **show ip domain-name** command

```
awplus#show ip domain-name
alliedtelesis.com
```

**Related commands**

ip domain-name

ip domain-lookup

# show ip name-server

**Overview** This command displays a list of IPv4 and IPv6 DNS server addresses that your device will send DNS requests to. This is a static list configured using the ip name-server command.

The command will also show any domain-list that has been associated as suffix-list with the DNS server, and the domains that will be preferentially directed to that DNS server.

When running VRF-lite, this command displays a list of IPv4 and IPv6 addresses of DNS servers that your device will send DNS requests to for either the global VRF instance or a selected VRF instance.

For information on filtering and saving command output, see the "Getting Started with AlliedWare Plus" Feature Overview and Configuration Guide.

**Syntax**

```
show ip name-server
```

**Syntax (VRF-lite)**

```
show ip name-server [vrf <name>|global]
```

| Parameter | Description |
|---|---|
| `vrf` | A VRF instance |
| `<name>` | The name of the specific VRF instance |
| `global` | The global VRF instance |

**Mode** User Exec and Privileged Exec

**Example** To display the list of DNS servers that your device sends DNS requests to, use the command:

```
awplus# show ip name-server
```

**Output** Figure 24-13: Example output from the **show ip name-server** command

```
awplus# show ip name-server
 10.10.0.123
 10.10.0.124
 2001:0db8:010d::1
```

**Example** To display the list of DNS servers that your device sends DNS requests to, use the command:

```
awplus# show ip name-server
```

**Output** Figure 24-14: Example output from the **show ip name-server** command

```
awplus#show ip name-server
Currently learned name-servers
10.36.200.165 dynamic (ppp0)
10.35.12.20 dynamic (ppp1), using suffix-list mysuffixlist:
        test.com
        intranet.interslice.com
10.37.84.97 static
130.37.84.97 static
```

**Output (VRF-lite)** Figure 24-15: Example output from the **show ip name-server** command for the VRF instance "red"

```
awplus# show ip name-server vrf red

[VRF: red]
 10.10.0.123
 10.10.0.124
 2001:0db8:010d::1
```

**Related commands**

ip domain-lookup

ip name-server

**Command changes** Version 5.4.6-2.1: VRF-lite support added.

# suppress-ipv4-updates (DDNS)

**Overview**

Use this command to suppress IPv4 updates from being sent.

Use the **no** variant of this command to stop suppressing IPv4 updates from being sent.

**Syntax**

```
suppress-ipv4-updates
no suppress-ipv4-updates
```

**Default**

Disabled

**Mode**

DDNS Update Method Configuration

**Usage notes**

This command is used in conjunction with the **use-ipv4-for-ipv6-updates** command. IPv4 DDNS updates are suppressed so that only IPv6 updates are sent.

***NOTE:*** *The IPv4 DNS entry may be updated using the source IPv4 address used.*

**Example**

To suppress IPv4 updates and send IPv6 updates instead for the method “dyndns”, use the commands:

```
awplus# configure terminal
awplus(config)# ddns-update-method-dyndns
awplus(config-ddns-update-method)# use-ipv4-for-ipv6-updates
awplus(config-ddns-update-method)# suppress-ipv4-updates
```

**Related commands**

ddns-update-method

use-ipv4-for-ipv6-updates (DDNS)

**Command changes**

Version 5.4.7-0.1: command added

# undebug (DDNS)

**Overview** Use this command to disable debugging for the DDNS process.

**Syntax**

```
undebug ddns
```

**Default** Disabled

**Mode** Privileged Exec

**Example** To disable debugging for the DDNS process, use the command:

```
awplus# undebug ddns
```

**Related commands** ddns-update-method

debug ddns

**Command changes** Version 5.4.7-0.1: command added

# update-interval (DDNS)

**Overview**

Use this command to specify the time interval between periodic DDNS updates.

Use the **no** variant of this command to disable periodic DDNS updates.

**Syntax**

```
update-interval <1-64800>
no update-interval
```

| Parameter | Description |
|---|---|
| *<1-64800>* | Update interval time in minutes (from 1 minute to 45 days). |

**Default**

Disabled

**Mode**

DDNS Update Method Configuration

**Examples**

To enable periodic DDNS updates every day for the method “dyndns”, use the commands:

```
awplus# configure terminal
awplus(config)# ddns-update-method dyndns
awplus(config-ddns-update-method)# update-interval 1440
```

To enable periodic DDNS updates every 28 days for the method “dyndns”, use the commands:

```
awplus# configure terminal
awplus(config)# ddns-update-method dyndns
awplus(config-ddns-update-method)# update-interval 40320
```

To disable periodic DDNS updates for the method “dyndns”, use the commands:

```
awplus# configure terminal
awplus(config)# ddns-update-method dyndns
awplus(config-ddns-update-method)# no update-interval
```

**Related commands**

ddns-update-method

**Command changes**

Version 5.4.7-0.1: command added

# update-url (DDNS)

**Overview** Use this command to configure a URL for DDNS updates for the current DDNS update method.

Use the **no** variant of this command to remove an update URL from a DDNS update method.

**Syntax**

```
update-url <url-name>
no update-url <url-name>
```

| Parameter | Description |
|---|---|
| *<url-name>* | The update URL is provided by the DDNS provider and can be configured with the following placeholder tokens:<br>• <USERNAME><br>• <PASSWORD><br>• <HOST-NAME><br>• <IPADDRESS><br>To specify the values for <USERNAME>, <PASSWORD> and <HOST-NAME>, use the commands **username, password** and **hostname**. The value for <IPADDRESS> is populated automatically from the interface IP settings. |

**Default** None

**Mode** DDNS Update Method Configuration

**Usage notes** The update URL (provided by the DDNS provider) can include a user name, password, host name and/or IP address. These user values are optional because they may vary depending on the DDNS provider's update URLs. AlliedWare Plus requires you to enter the required parameters for the update URL using the following placeholder tokens:

- for the user name enter "<USERNAME>"
- for the password enter "<PASSWORD>"
- for the host name enter "<HOST-NAME>"
- for the IP address enter "<IPADDRESS>"

For example, for DynDNS the following update URL can be used:

```
http://username:password@members.dyndns.org/nic/update?
SYSTEM=dyndns&hostname=<h>&myip=<a>
```

To configure this URL, use the following command including the placeholder tokens as written here:

```
awplus(config-ddns-update-method)# update-url
http://<USERNAME>:<PASSWORD>@members.dyndns.org/nic/update?
SYSTEM=dyndns&hostname=<HOST-NAME>&myip=<IPADDRESS>
```

DynDNS also has the following update URL that can be used instead:

```
http://<USERNAME>:<PASSWORD>@members.dyndns.org/v3/update?
hostname=<HOST-NAME>&myip=<IPADDRESS>
```

***NOTE:*** *URLs that contain the character "?" activate help from the command line. To stop the help from activating enter the "?" in the command line, then press Ctrl+v.*

For more information and examples, see the Domain Name System (DNS) for AlliedWare Plus AR-Series Firewalls Feature Overview and Configuration Guide.

**Examples**

To use members.dyndns.org/nic/update as the update URL for the provider DynDNS, with the method called "dyndns" that uses HTTP, use the following commands:

```
awplus# configure terminal
awplus(config)# ddns-update-method dyndns
awplus(config-ddns-update-method)# update-url
http://<USERNAME>:<PASWORD>@members.dyndns.org/nic/update?
SYSTEM=dyndns&hostname=<HOST-NAME>&myip=<IPADDRESS>
```

To use members.dyndns.org/v3/update as the update URL for the provider DynDNS, with the method called "dyndns" that uses HTTP, use the following commands:

```
awplus# configure terminal
awplus(config)# ddns-update-method dyndns
awplus(config-ddns-update-method)# update-url
http://<USERNAME>:<PASSWORD>@members.dyndns.org/v3/update?
hostname=<HOST-NAME>&myip=<IPADDRESS>
```

To use members.dyndns.org/v3/update as the update URL for the provider DynDNS, with the method called "dyndns" that uses HTTPS/SSL, use the following commands:

```
awplus# configure terminal
awplus(config)# ddns-update-method dyndns
awplus(config-ddns-update-method)# update-url
https://<USERNAME>:<PASSWORD>@members.dyndns.org/v3/update?
hostname=<HOST-NAME>&myip=<IPADDRESS>
```

To use members.dyndns.org/v3/update as the update URL for the provider DynDNS, with the method called "dyndns" that uses HTTP on port 8245, use the following commands:

```
awplus# configure terminal
awplus(config)# ddns-update-method dyndns
awplus(config-ddns-update-method)# update-url
http://<USERNAME>:<PASSWORD>@members.dyndns.org:8245/v3/
update?hostname=<HOST-NAME>&myip=<IPADDRESS>
```

To remove the update URL from the method called “dyndns”, use the following commands:

```
awplus# configure terminal
awplus(config)# ddns-update-method dyndns
awplus(config-ddns-update-method)# no update-url
```

**Related commands**

ddns-update-method

**Command changes**

Version 5.4.7-0.1: command added

# use-ipv4-for-ipv6-updates (DDNS)

**Overview**

Use this command to send IPv6 updates using IPv4.

Use the **no** variant of this command to stop sending IPv6 updates using IPv4.

**Syntax**

```
use-ipv4-for-ipv6-updates
no use-ipv4-for-ipv6-updates
```

**Default**

Disabled

**Mode**

DDNS Update Method Configuration

**Usage notes**

If your DDNS provider supports IPv6 but does not support sending updates in IPv6 then this command is used so IPv6 updates can be sent using IPv4 instead. The **suppress-ipv4-updates** command is used in conjunction with this command to suppress IPv4 updates and send only IPv6 updates instead.

**example**

To send IPv6 updates using IPv4 for the method “dyndns” and to suppress IPv4 updates, use the commands:

```
awplus# configure terminal
awplus(config)# ddns-update-method dyndns
awplus(config-ddns-update-method)# use-ipv4-for-ipv6-updates
awplus(config-ddns-update-method)# suppress-ipv4-updates
```

**Related commands**

ddns-update-method

suppress-ipv4-updates (DDNS)

**Command changes**

Version 5.4.7-0.1: command added

# username (DDNS)

**Overview**

Use this command to add a user name to the current DDNS update method.

Use the **no** variant of this command to remove a user name from the current DDNS update method.

**Syntax**

```
username <user-name>
no username
```

| Parameter | Description |
|---|---|
| *<user-name>* | The name of the user to be configured in conjunction with the password and host name. |

**Default**

None

**Mode**

DDNS Update Method Configuration

**Example**

To configure the username “atlnz” for the method “dyndns”, use the following commands:

```
awplus# configure terminal
awplus(config)# ddns-update-method dyndns
awplus(config-ddns-update-mthod)# username atlnz
```

To remove the username “atlnz” from the method “dyndns”, use the following commands:

```
awplus# configure terminal
awplus(config)# ddns-update-method dyndns
awplus(config-ddns-update-mthod)# no username
```

**Related commands**

ddns-update-method

**Command changes**

Version 5.4.7-0.1: command added

# 25 IPv6 Commands

## Introduction

**Overview** This chapter provides an alphabetical reference of commands used to configure IPv6. For more information, see the IPv6 Feature Overview and Configuration Guide.

**Command List**


- "clear ipv6 neighbors" on page 862
- "ipv6 address" on page 863
- "ipv6 address autoconfig" on page 865
- "ipv6 address suffix" on page 867
- "ipv6 enable" on page 868
- "ipv6 eui64-linklocal" on page 870
- "ipv6 forwarding" on page 871
- "ipv6 icmp error-interval" on page 872
- "ipv6 multicast forward-slow-path-packet" on page 873
- "ipv6 multihoming" on page 874
- "ipv6 nd accept-ra-default-routes" on page 875
- "ipv6 nd accept-ra-pinfo" on page 876
- "ipv6 nd current-hoplimit" on page 877
- "ipv6 nd managed-config-flag" on page 879
- "ipv6 nd minimum-ra-interval" on page 880
- "ipv6 nd other-config-flag" on page 882
- "ipv6 nd prefix" on page 883
- "ipv6 nd proxy interface" on page 885
- "ipv6 nd ra-interval" on page 887

- "ipv6 nd ra-lifetime" on page 888
- "ipv6 nd reachable-time" on page 889
- "ipv6 nd retransmission-time" on page 891
- "ipv6 nd suppress-ra" on page 893
- "ipv6 neighbor" on page 894
- "ipv6 opportunistic-nd" on page 895
- "ipv6 route" on page 896
- "ipv6 unreachables" on page 898
- "optimistic-nd" on page 899
- "ping ipv6" on page 900
- "show ipv6 forwarding" on page 902
- "show ipv6 interface" on page 903
- "show ipv6 neighbors" on page 904
- "show ipv6 route" on page 905
- "show ipv6 route summary" on page 907
- "traceroute ipv6" on page 908

# clear ipv6 neighbors

**Overview** Use this command to clear all dynamic IPv6 neighbor entries.

**Syntax**

```
clear ipv6 neighbors
```

**Mode** Privileged Exec

**Example**

```
awplus# clear ipv6 neighbors
```

**Related commands** ipv6 neighbor

show ipv6 neighbors

# ipv6 address

**Overview** Use this command to set the IPv6 address of an interface. The command also enables IPv6 on the interface, which creates an EUI-64 link-local address as well as enabling RA processing and SLAAC.

To stop the device from processing prefix information (routes and addresses from the received Router Advertisements) use the command **no ipv6 nd accept-ra-pinfo**.

To remove the EUI-64 link-local address, use the command **no ipv6 eui64-linklocal**.

Use the **no** variant of this command to remove the IPv6 address assigned and disable IPv6. Note that if no global addresses are left after removing the IPv6 address then IPv6 is disabled.

**Syntax**

```
ipv6 address <ipv6-addr/prefix-length>
no ipv6 address <ipv6-addr/prefix-length>
```

| Parameter | Description |
|---|---|
| *<ipv6-addr/prefix-length>* | Specifies the IPv6 address to be set. The IPv6 address uses the format X:X::X:X/Prefix-Length. The prefix-length is usually set between 0 and 64. |

**Mode** Interface Configuration for a VLAN interface, an Eth interface, an 802.1Q sub-interface, a local loopback interface, a PPP interface, a bridge, or a tunnel.

**Usage notes** Note that the device keeps link-local addresses until you remove them with the **no** variant of the command that established them. See the ipv6 enable command for more information.

Also note that the device keeps the link-local address if the global address is removed using a command other than the command that was used to establish the link-local address. For example, if a link local address is established with the ipv6 enable command then it will not be removed using a **no ipv6 address** command.

**Examples** To assign the IPv6 address 2001:0db8::a2/64 to the VLAN interface vlan2, use the commands:

```
awplus# configure terminal
awplus(config)# interface vlan2
awplus(config-if)# ipv6 address 2001:0db8::a2/64
```

To remove the IPv6 address 2001:0db8::a2/64 from the VLAN interface vlan2, use the commands:

```
awplus# configure terminal
awplus(config)# interface vlan2
awplus(config-if)# no ipv6 address 2001:0db8::a2/64
```

To assign the IPv6 address to the PPP interface ppp0, use the commands:

```
awplus# configure terminal
awplus(config)# interface ppp0
awplus(config-fr-subif)# ipv6 address 2001:0db8::a2/64
```

To assign the IPv6 address to the tunnel tunnel0, use the commands:

```
awplus# configure terminal
awplus(config)# interface tunnel0
awplus(config-fr-subif)# ipv6 address 2001:0db8::a2/64
```

To remove the IPv6 address 2001:0db8::a2/64 from the PPP interface ppp0, use the commands:

```
awplus# configure terminal
awplus(config)# interface ppp0
awplus(config-if)# no ipv6 address 2001:0db8::a2/64
```

**Related commands**

ipv6 address autoconfig

ipv6 address dhcp

ipv6 dhcp server

ipv6 enable

ipv6 eui64-linklocal

show running-config

show ipv6 interface

show ipv6 route

# ipv6 address autoconfig

**Overview** Use this command to enable IPv6 stateless address autoconfiguration (SLAAC) for an interface. This configures an IPv6 address on an interface derived from the MAC address on the interface.

Use the **no** variant of this command to disable IPv6 SLAAC on an interface. Note that if no global addresses are left after removing all IPv6 autoconfigured addresses then IPv6 is disabled.

**Syntax**

```
ipv6 address autoconfig
no ipv6 address autoconfig
```

**Mode** Interface Configuration for a VLAN interface, an Eth interface, an 802.1Q sub-interface, a local loopback interface, a PPP interface, a bridge, or a tunnel.

**Usage notes** Use this command to enable automatic configuration of IPv6 addresses using stateless autoconfiguration on an interface, and enable IPv6.

IPv6 hosts can configure themselves when connected to an IPv6 network using ICMPv6 (Internet Control Message Protocol version 6) router discovery messages. Configured routers respond with a Router Advertisement (RA) containing configuration parameters for IPv6 hosts.

The SLAAC process derives the interface identifier of the IPv6 address from the MAC address of the interface. When applying SLAAC to an interface, note that the MAC address of the default VLAN is applied to the interface if the interface does not have its own MAC address.

If SLAAC is not suitable then a network can use stateful configuration with DHCPv6 (Dynamic Host Configuration Protocol version 6) Relay, or hosts can be configured statically. See ip dhcp-relay server-address for the DHCPv6 Relay server command description and examples. See the IP Feature Overview and Configuration Guide for more information about DNS Relay.

Note that the device keeps link-local addresses until you remove them with the **no** variant of the command that established them. See the ipv6 enable command for more information.

Also note that the device keeps the link-local address if the global address is removed using a command other than the command that was used to establish the link-local address. For example, if a link local address is established with the ipv6 enable command then it will not be removed using a **no ipv6 address** command.

**Examples** To enable SLAAC on ppp0, use the commands:

```
awplus# configure terminal
awplus(config)# interface ppp0
awplus(config-if)# ipv6 address autoconfig
```

To disable SLAAC on ppp0, use the commands:

```
awplus# configure terminal
awplus(config)# interface ppp0
awplus(config-if)# no ipv6 address autoconfig
```

**Related commands**

ipv6 address

ipv6 enable

show ipv6 interface

show running-config

# ipv6 address suffix

**Overview**

Use this command to configure the suffix to use when generating an address from prefix information. Any addresses that were created with the EUI-64 suffix will be removed, and new addresses will be added after the next Router Advertisement.

Use the **no** variant of this command to set it back to the default of disabled or set to :: for the same result as the **no** variant.

**Syntax**

```
ipv6 address suffix <ipv6-addr-suffix>
no ipv6 address suffix
```

| Parameter | Description |
|---|---|
| *<ipv6-addr-suffix>* | In the format of ::X:X:X:X, for example ::a2d8:0fd8 |

**Default**

Disabled

**Mode**

Interface Configuration for a VLAN interface, an Eth interface, an 802.1Q sub-interface, a local loopback interface, a PPP interface, a bridge, or a tunnel.

**Example**

To configure the suffix to use when generating an address from prefix information on eth1, use the command:

```
awplus# configure terminal
awplus(config)# interface eth1
awplus(config-if)# ipv6 address suffix ::a2d8:0fd8
```

**Related commands**

ipv6 nd accept-ra-pinfo

show running-config interface

**Command changes**

Version 5.4.8-2.1: command added

# ipv6 enable

**Overview** Use this command to enable automatic configuration of a link-local IPv6 address on an interface using Stateless Automatic Address Configuration (SLAAC). By default, the EUI-64 method is used to generate the link-local address.

Use the **no** variant of this command to disable IPv6 on an interface without a global address. Note, to stop EUI-64 from generating the automatic link-local address, use the command **no ipv6 eui64-linklocal**.

**Syntax**

```
ipv6 enable
no ipv6 enable
```

**Mode** Interface Configuration for a VLAN interface, an Eth interface, an 802.1Q sub-interface, a local loopback interface, a PPP interface, a bridge, or a tunnel.

**Usage notes** The **ipv6 enable** command automatically configures an IPv6 link-local address on the interface and enables the interface for IPv6 processing.

A link-local address is an IP (Internet Protocol) address that is only used for communications in the local network, or for a point-to-point connection. Routing does not forward packets with link-local addresses. IPv6 requires that a link-local address is assigned to each interface that has the IPv6 protocol enabled, and when addresses are assigned to interfaces for routing IPv6 packets.

Note that the device keeps link-local addresses until you remove them with the **no** variant of the command that established them.

Also note that the device keeps the link-local address if the global address is removed using a command other than the command that was used to establish the link-local address. For example, if a link local address is established with the ipv6 enable command then it will not be removed using a **no ipv6 address** command.

**Default** All interfaces default to IPv6-down with no address.

**Examples** To enable IPv6 with only a link-local IPv6 address on the VLAN interface vlan2, use the following commands:

```
awplus# configure terminal
awplus(config)# interface vlan2
awplus(config-if)# ipv6 enable
```

To disable IPv6 with only a link-local IPv6 address on the VLAN interface vlan2, use the following commands:

```
awplus# configure terminal
awplus(config)# interface vlan2
awplus(config-if)# no ipv6 enable
```

To enable IPv6 with only a link-local IPv6 address on the PPP interface ppp0, use the following commands:

```
awplus# configure terminal
awplus(config)# interface ppp0
awplus(config-if)# ipv6 enable
```

To disable IPv6 with only a link-local IPv6 address on the PPP interface ppp0, use the following commands:

```
awplus# configure terminal
awplus(config)# interface ppp0
awplus(config-if)# no ipv6 enable
```

**Related commands**

ipv6 address

ipv6 address autoconfig

ipv6 address dhcp

ipv6 address (DHCPv6 PD)

ipv6 dhcp client pd

ipv6 nd prefix

show ipv6 interface

show ipv6 route

show running-config

# ipv6 eui64-linklocal

**Overview**

When IPv6 is enabled on an interface, an EUI link-local address is generated and installed on the interface. In other words, **ipv6 eui64-linklocal** is enabled by default on any IPv6 enabled interface.

Use the **no** variant of this command to disallow the automatic generation of the EUI-64 link-local address on an IPv6 enabled interface.

**Syntax**

```
ipv6 eui64-linklocal
no ipv6 eui64-linklocal
```

**Default**

The command **ipv6 eui64-linklocal** is enabled by default on any IPv6 enabled interface.

**Mode**

Interface Configuration for a VLAN interface, an Eth interface, an 802.1Q sub-interface, a local loopback interface, a PPP interface, a bridge, or a tunnel.

**Example**

To enable IPv6 on an interface eth1, and use the link-local address of fe80 : :1/10 instead of the EUI-64 link-local that is automatically generated, use the following commands:

```
awplus# configure terminal
awplus(config)# interface eth1
awplus(config-if)# ipv6 enable
awplus(config-if)# no ipv6 eui64-linklocal
awplus(config-if)# ipv6 address fe80::1/10
```

**Related commands**

ipv6 address

ipv6 address autoconfig

ipv6 enable

**Command changes**

Version 5.4.7-0.1: command added

# ipv6 forwarding

**Overview**

Use this command to turn on IPv6 unicast routing for IPv6 packet forwarding.

Use this command globally on your device before using the ipv6 enable command on individual interfaces.

Use the **no** variant of this command to turn off IPv6 unicast routing. Note IPv6 unicast routing is disabled by default.

**Syntax**

```
ipv6 forwarding
no ipv6 forwarding
```

**Mode**

Global Configuration

**Default**

IPv6 unicast forwarding is disabled by default.

**Usage notes**

Enable IPv6 unicast forwarding globally for all interfaces on your device with this command. Use the **no** variant of this command to disable IPv6 unicast forwarding globally for all interfaces on your device.

IPv6 unicast forwarding allows devices to communicate with devices that are more than one hop away, providing that there is a route to the destination address. If IPv6 forwarding is not enabled then pings to addresses on devices that are more than one hop away will fail, even if there is a route to the destination address.

**Examples**

To enable IPv6 unicast routing, use the commands:

```
awplus# configure terminal
awplus(config)# ipv6 forwarding
```

To disable IPv6 unicast routing, use the commands:

```
awplus# configure terminal
awplus(config)# no ipv6 forwarding
```

**Related commands**

ipv6 enable

ipv6 multicast-routing

# ipv6 icmp error-interval

**Overview** Use this command to limit how often IPv6 ICMP error messages are sent. The maximum frequency of messages is specified in milliseconds.

Use the **no** variant of this command to reset the frequency to the default

**Syntax**

```
ipv6 icmp error-interval <interval>
no ipv6 icmp error-interval
```

| Parameter | Description |
|---|---|
| *<interval>* | 0-2147483647, interval in milliseconds. |

**Default** 1000

**Mode** Global Configuration

**Example** To configure the rate to be at most one packet every 10 seconds, use the commands:

```
awplus# configure terminal
awplus(config)# ipv6 icmp error-interval 10000
```

To reset the rate to the default of one packet every second, use the commands:

```
awplus# configure terminal
awplus(config)# no ipv6 icmp error-interval
```

**Related commands** ip icmp error-interval

# ipv6 multicast forward-slow-path-packet

**Overview**

Use this command to enable multicast packets to be forwarded to the CPU. Enabling this command will ensure that the layer L3 MTU is set correctly for each IP multicast group and will apply the value of the smallest MTU among the outgoing interfaces for the multicast group.

It will also ensure that a received packet that is larger than the MTU value will result in the generation of an ICMP Too Big message.

Use the **no** variant of this command to disable the above functionality.

**Syntax**

```
ipv6 multicast forward-slow-path-packet
no ipv6 multicast forward-slow-path-packet
```

**Default**

Disabled.

**Mode**

Privileged Exec

**Example**

To enable the ipv6 multicast forward-slow-path-packet function, use the following commands:

```
awplus# configure terminal
awplus(config)# ip multicast forward-slow-path-packet
```

**Related commands**

show ipv6 forwarding

# ipv6 multihoming

**Overview**

Use this command to enable IPv6 multihoming. IPv6 multihoming dynamically adds IPv6 routes, with source prefixes, based on Neighbor Discovery Protocol (NDP) utilizing the Router Advertisements (RAs).

This allows segregation of traffic between multiple gateways, which is useful for sending traffic to multiple ISPs for increased redundancy and load balancing.

Use the **no** variant of this command to disable IPv6 multihoming.

**Syntax**

```
ipv6 multihoming
no ipv6 multihoming
```

**Default**

Disabled

**Mode**

Interface Configuration

**Usage notes**

Note that static IPv6 source address dependent routes do not require this feature.

**Examples**

To configure IPv6 multihoming, use the commands:

```
awplus# configure terminal
awplus(config)# interface eth1
awplus(config-if)# ipv6 multihoming
```

To disable IPv6 multihoming, use the commands:

```
awplus# configure terminal
awplus(config)# interface eth1
awplus(config-if)# no ipv6 multihoming
```

**Related commands**

ipv6 route

**Command changes**

Version 5.5.0-0.3: command added

# ipv6 nd accept-ra-default-routes

**Overview**

Use this command to allow accepting and installing of default routes based on a received RA (Router Advertisement). The default route's destination is set to the source address of the received RA.

Use the **no** variant of this command to disable accepting RA-based default routes.

**Syntax**

```
ipv6 nd accept-ra-default-routes
no ipv6 nd accept-ra-default-routes
```

**Default**

RA-based default routes are accepted by default.

**Mode**

Interface Configuration for a VLAN interface, an Eth interface, an 802.1Q sub-interface, a local loopback interface, a PPP interface, a bridge, or a tunnel.

**Example**

To enable RA-based default routes on eth1, use the following commands:

```
awplus# configure terminal
awplus(config)# interface eth1
awplus(config-if)# ipv6 nd accept-ra-default-routes
```

**Related commands**

ipv6 address

ipv6 address autoconfig

ipv6 enable

# ipv6 nd accept-ra-pinfo

**Overview**

Use this command to allow the processing of the prefix information included in a received RA (Router Advertisement) on an IPv6 enabled interface.

Use the **no** variant of this command to disable an IPv6 interface from using the prefix information within a received RA.

**Syntax**

```
ipv6 nd accept-ra-pinfo
no ipv6 nd accept-ra-pinfo
```

**Default**

The command **ipv6 nd accept-ra-pinfo** is enabled by default on any IPv6 interface.

**Mode**

Interface Configuration for a VLAN interface, an Eth interface, an 802.1Q sub-interface, a local loopback interface, a PPP interface, a bridge, or a tunnel.

**Usage notes**

By default, when IPv6 is enabled on an interface, SLAAC is also enabled. SLAAC addressing along with the EUI-64 process, uses the prefix information included in a received RA to generate an automatic link-local address on the IPv6 interface.

Note: an AlliedWare Plus device will, by default, add a prefix for the connected interface IPv6 address(es) to the RA it transmits. However, this behavior can be changed by using the command **no ipv6 nd prefix auto-advertise**, so there is no guarantee that an RA will contain a prefix.

**Example**

To enable IPv6 on eth1 without installing a SLAAC address on the interface, use the following commands:

```
awplus# configure terminal
awplus(config)# interface eth1
awplus(config-if)# ipv6 enable
awplus(config-if)# no ipv6 nd accept-ra-pinfo
```

**Related commands**

ipv6 address

ipv6 address autoconfig

ipv6 enable

**Command changes**

Version 5.4.7-0.1: command added

# ipv6 nd current-hoplimit

**Overview** Use this command to specify the advertised current hop limit used between IPv6 Routers.

Use the **no** variant of this command to reset the current advertised hop limit to the default of 0.

**Syntax**

```
ipv6 nd current-hoplimit <hoplimit>
no ipv6 nd current-hoplimit
```

| Parameter | Description |
|---|---|
| *<hoplimit>* | Specifies the advertised current hop limit value. Valid values are from 0 to 255 hops. |

**Default** 0 (No advertised current hop limit specified)

**Mode** Interface Configuration for a VLAN interface, an Eth interface, an 802.1Q sub-interface, a local loopback interface, a PPP interface, a bridge, or a tunnel.

**Examples** To set the advertised current hop limit to 2 between IPv6 Routers on vlan2, use the following commands:

```
awplus# configure terminal
awplus(config)# interface vlan2
awplus(config-if)# ipv6 nd current-hoplimit 2
```

To reset the advertised current hop limit to the default 0 on vlan2, use the following commands:

```
awplus# configure terminal
awplus(config)# interface vlan2
awplus(config-if)# no ipv6 nd current-hoplimit
```

To set the advertised current hop limit to 2 between IPv6 Routers on ppp0, use the following commands:

```
awplus# configure terminal
awplus(config)# interface ppp0
awplus(config-if)# ipv6 nd current-hoplimit 2
```

To reset the advertised current hop limit to the default 0 on ppp0, use the following commands:

```
awplus# configure terminal
awplus(config)# interface ppp0
awplus(config-if)# no ipv6 nd current-hoplimit
```

**Related commands**

ipv6 nd managed-config-flag

ipv6 nd prefix

ipv6 nd suppress-ra

# ipv6 nd managed-config-flag

**Overview**

Use this command to set the managed address configuration flag, contained within the router advertisement field.

Setting this flag indicates the operation of a stateful autoconfiguration protocol such as DHCPv6 for address autoconfiguration, and that address information (i.e. the network prefix) and other (non-address) information can be requested from the device.

An unset flag enables hosts receiving the advertisements to use a stateless autoconfiguration mechanism to establish their IPv6 addresses. The default is flag unset.

Use the **no** variant of this command to reset this command to its default of having the flag unset.

**Syntax**

```
ipv6 nd managed-config-flag
no ipv6 nd managed-config-flag
```

**Default**

Unset

**Mode**

Interface Configuration for a VLAN interface, an Eth interface, an 802.1Q sub-interface, a local loopback interface, a PPP interface, a bridge, or a tunnel.

**Usage notes**

Advertisement flags will not be transmitted unless you have applied the ipv6 nd suppress-ra command. This step is included in the example below.

**Example**

To set the managed address configuration flag on vlan2, use the following commands:

```
awplus# configure terminal
awplus(config)# interface vlan2
awplus(config-if)# ipv6 nd managed-config-flag
awplus(config-if)# no ipv6 nd suppress-ra
```

To set the managed address configuration flag on the PPP interface ppp0, use the following commands:

```
awplus# configure terminal
awplus(config)# interface ppp0
awplus(config-if)# ipv6 nd managed-config-flag
awplus(config-if)# no ipv6 nd suppress-ra
```

**Related commands**

ipv6 nd suppress-ra

ipv6 nd prefix

ipv6 nd other-config-flag

# ipv6 nd minimum-ra-interval

**Overview** Use this command in Interface Configuration mode to set a minimum Router Advertisement (RA) interval for an interface.

Use the **no** variant of this command in Interface Configuration mode to remove the minimum RA interval for an interface.

**Syntax**

```
ipv6 nd minimum-ra-interval <seconds>
no ipv6 nd minimum-ra-interval
```

| Parameter | Description |
|---|---|
| *<seconds>* | Specifies the number of seconds between IPv6 Router Advertisements (RAs). Valid values are from 3 to 1350 seconds. |

**Default** The RA interval for an interface is unset by default.

**Mode** Interface Configuration for a VLAN interface, an Eth interface, an 802.1Q sub-interface, a local loopback interface, a PPP interface, a bridge, or a tunnel.

**Examples** To set the minimum RA interval for the VLAN interface vlan2, use the following commands:

```
awplus# configure terminal
awplus(config)# interface vlan2
awplus(config-if)# ipv6 nd minimum-ra-interval 60
```

To remove the minimum RA interval for the VLAN interface vlan2, use the following commands:

```
awplus# configure terminal
awplus(config)# interface vlan2
awplus(config-if)# no ipv6 nd minimum-ra-interval
```

To set the minimum RA interval for the PPP interface ppp0, use the following commands:

```
awplus# configure terminal
awplus(config)# interface ppp0
awplus(config-if)# ipv6 nd minimum-ra-interval 60
```

To remove the minimum RA interval for the PPP interface ppp0, use the following commands:

```
awplus# configure terminal
awplus(config)# interface ppp0
awplus(config-if)# no ipv6 nd minimum-ra-interval
```

**Related commands**

ipv6 nd ra-interval

ipv6 nd suppress-ra

ipv6 nd prefix

ipv6 nd other-config-flag

# ipv6 nd other-config-flag

**Overview**

Use this command to set the **other** stateful configuration flag (contained within the router advertisement field) to be used for IPv6 address auto-configuration. This flag is used to request the router to provide information in addition to providing addresses.

Setting the ipv6 nd managed-config-flag command implies that the ipv6 nd other-config-flag will also be set.

Use **no** variant of this command to reset the value to the default.

**Syntax**

```
ipv6 nd other-config-flag
no ipv6 nd other-config-flag
```

**Default**

Unset

**Mode**

Interface Configuration for a VLAN interface, an Eth interface, an 802.1Q sub-interface, a local loopback interface, a PPP interface, a bridge, or a tunnel.

**Usage notes**

Advertisement flags will not be transmitted unless you have applied the ipv6 nd suppress-ra command. This step is included in the example below.

**Example**

To set the IPv6 other-config-flag on the VLAN interface vlan2, use the following commands:

```
awplus# configure terminal
awplus(config)# interface vlan2
awplus(config-if)# ipv6 nd other-config-flag
awplus(config-if)# no ipv6 nd suppress-ra
```

To set the IPv6 other-config-flag on the PPP interface ppp0, use the following commands:

```
awplus# configure terminal
awplus(config)# interface ppp0
awplus(config-if)# ipv6 nd other-config-flag
awplus(config-if)# no ipv6 nd suppress-ra
```

**Related commands**

ipv6 nd suppress-ra

ipv6 nd prefix

ipv6 nd managed-config-flag

# ipv6 nd prefix

**Overview** Use this command in Interface Configuration mode to specify the IPv6 prefix information that is advertised by the router advertisement for IPv6 address auto-configuration.

Use the **no** parameter with this command to reset the IPv6 prefix for an interface in Interface Configuration mode.

**Syntax**

```
ipv6 nd prefix <ipv6-prefix/length>
ipv6 nd prefix <ipv6-prefix/length> [<valid-lifetime>]
ipv6 nd prefix <ipv6-prefix/length>
<valid-lifetime><preferred-lifetime> [no-autoconfig]
ipv6 nd prefix <ipv6-prefix/length>
<valid-lifetime><preferred-lifetime> off-link [no-autoconfig]
no ipv6 nd prefix [<ipv6-addr/prefix-length>|all]
```

| Parameter | Description |
|---|---|
| *<ipv6-prefix/length>* | The prefix to be advertised by the router advertisement message.<br>The IPv6 address prefix uses the format X:X::/prefix-length. The prefix-length is usually set between 0 and 64. The default is X:X::/64. |
| *<valid-lifetime>* | The the period during which the specified IPv6 address prefix is valid. This can be set to a value between 0 and 4294967295 seconds. The default is 2592000 (30 days). Note that this period should be set to a value greater than that set for the prefix preferred-lifetime. |
| *<preferred-lifetime>* | Specifies the IPv6 prefix preferred lifetime. This is the period during which the IPv6 address prefix is considered a current (undeprecated) value. After this period, the command is still valid but should not be used in new communications. Set to a value between 0 and 4294967295 seconds. The default is 604800 seconds (7 days).<br>Note that this period should be set to a value less than that set for the prefix valid-lifetime. |
| `off-link` | Specify the IPv6 prefix off-link flag. The default is flag set. |
| `no-autoconfig` | Specify the IPv6 prefix no autoconfiguration flag. Setting this flag indicates that the prefix is not to be used for autoconfiguration. The default is flag set. |
| `all` | Specify all IPv6 prefixes associated with the VLAN interface. |

**Default** Valid-lifetime default is 2592000 seconds (30 days). Preferred-lifetime default is 604800 seconds (7 days).

**Mode** Interface Configuration for a VLAN interface, an Eth interface, an 802.1Q sub-interface, a local loopback interface, a PPP interface, a bridge, or a tunnel.

**Usage notes** This command specifies the IPv6 prefix flags that are advertised by the router advertisement message.

**Examples** To configure the device to issue router advertisements on vlan2, and advertise the address prefix of 2001:0db8::/64, use the commands:

```
awplus# configure terminal
awplus(config)# interface vlan2
awplus(config-if)# ipv6 nd prefix 2001:0db8::/64
```

To configure the device to issue router advertisements on vlan2, and advertise the address prefix of 2001:0db8::/64 with a valid lifetime of 10 days and a preferred lifetime of 5 days, use the commands:

```
awplus# configure terminal
awplus(config)# interface vlan2
awplus(config-if)# ipv6 nd prefix 2001:0db8::/64 864000 432000
```

To configure the device to issue router advertisements on vlan2 and advertise the address prefix of 2001:0db8::/64 with a valid lifetime of 10 days, a preferred lifetime of 5 days, and no prefix used for autoconfiguration, use the commands:

```
awplus# configure terminal
awplus(config)# interface vlan2
awplus(config-if)# ipv6 nd prefix 2001:0db8::/64 864000 432000
no-autoconfig
```

To reset router advertisements on vlan2, so the address prefix of 2001:0db8::/64 is not advertised from the device, use the commands:

```
awplus# configure terminal
awplus(config)# interface vlan2
awplus(config-if)# no ipv6 nd prefix 2001:0db8::/64
```

To reset all router advertisements on vlan2, use the commands:

```
awplus# configure terminal
awplus(config)# interface vlan2
awplus(config-if)# no ipv6 nd prefix all
```

**Related commands** ipv6 nd suppress-ra

# ipv6 nd proxy interface

**Overview** Use this command to enable the neighbor discovery proxy that forwards Neighbor Solicitations (NS) and Neighbor Advertisements (NA) between two interfaces.

Use the **no** variant of this command to disable the neighbor discovery proxy.

**Syntax**

```
ipv6 nd proxy interface [<interface-name>]
no ipv6 nd proxy
```

| Parameter | Description |
|---|---|
| *<interface-name>* | The name of the VLAN, Ethernet or Bridge interface to proxy NS and NA from/to. For example *vlan1, eth1 or br1*. |

**Default** No ND proxy is enabled

**Mode** Interface Configuration

**Examples** To enable neighbor discovery proxy on eth1 and forward NS and NA to vlan1, use the commands:

```
awplus# configure terminal
awplus(config)# interface eth1
awplus(config-if)# ipv6 nd proxy interface vlan1
```

To disable neighbor discovery proxy on eth1, use the commands:

```
awplus# configure terminal
awplus(config)# interface eth1
awplus(config-if)# no ipv6 nd proxy
```

Example running configuration output to enable neighbor discovery proxy between eth1 and br1:

```
!
bridge 1
!
int vlan1
 bridge-group 1
!
int vlan2
 bridge-group 1
!
interface eth1
 ipv6 enable
 ipv6 nd proxy interface br1
!
interface br1
 ipv6 enable
 ipv6 nd proxy interface eth1
 ipv6 address autoconfig eth1
!
```

**Related commands**

show running-config

**Command changes**

Version 5.4.8-1.1: command added

# ipv6 nd ra-interval

**Overview** Use this command to specify the interval between IPv6 Router Advertisements (RA) transmissions.

Use **no** parameter with this command to reset the value to the default value (600 seconds).

**Syntax**

```
ipv6 nd ra-interval <seconds>
no ipv6 nd ra-interval
```

| Parameter | Description |
|---|---|
| *<seconds>* | Specifies the number of seconds between IPv6 Router Advertisements (RAs). Valid values are from 4 to 1800 seconds. |

**Default** 600 seconds.

**Mode** Interface Configuration for a VLAN interface, an Eth interface, an 802.1Q sub-interface, a local loopback interface, a PPP interface, a bridge, or a tunnel.

**Usage notes** Advertisement flags will not be transmitted unless you have applied the **no ipv6 nd suppress-ra** command as shown in the example below.

**Example** To set the advertisements interval on vlan2 to be 60 seconds, use the following commands:

```
awplus# configure terminal
awplus(config)# interface vlan2
awplus(config-if)# ipv6 nd ra-interval 60
awplus(config-if)# no ipv6 nd suppress-ra
```

**Related commands**

ipv6 nd minimum-ra-interval

ipv6 nd suppress-ra

ipv6 nd prefix

# ipv6 nd ra-lifetime

**Overview** Use this command to specify the time period that this router can usefully act as a default gateway for the network. Each router advertisement resets this time period.

Use **no** parameter with this command to reset the value to default.

**Syntax**

```
ipv6 nd ra-lifetime <seconds>
no ipv6 nd ra-lifetime
```

| Parameter | Description |
|---|---|
| *<seconds>* | Time period in seconds. Valid values are from 0 to 9000.<br>Note that you should set this time period to a value greater than the value you have set using the ipv6 nd ra-interval command. |

**Default** 1800 seconds

**Mode** Interface Configuration for a VLAN interface, an Eth interface, an 802.1Q sub-interface, a local loopback interface, a PPP interface, a bridge, or a tunnel.

**Usage notes** This command specifies the lifetime of the current router to be announced in IPv6 Router Advertisements.

Advertisement flags will not be transmitted unless you have applied the **no ipv6 nd suppress-ra** command. This instruction is included in the example shown below.

**Examples** To set the advertisement lifetime of 8000 seconds on the VLAN interface vlan2, use the following commands:

```
awplus# configure terminal
awplus(config)# interface vlan2
awplus(config-if)# ipv6 nd ra-lifetime 8000
awplus(config-if)# no ipv6 nd suppress-ra
```

To set the advertisement lifetime of 8000 seconds on the PPP interface ppp0, use the following commands:

```
awplus# configure terminal
awplus(config)# interface ppp0
awplus(config-if)# ipv6 nd ra-lifetime 8000
awplus(config-if)# no ipv6 nd suppress-ra
```

**Related commands** ipv6 nd suppress-ra

ipv6 nd prefix

# ipv6 nd reachable-time

**Overview** Use this command to specify the reachable time in the router advertisement to be used for detecting reachability of the IPv6 neighbor.

Use the **no** variant of this command to reset the value to default.

**Syntax**

```
ipv6 nd reachable-time <milliseconds>
no ipv6 nd reachable-time
```

| Parameter | Description |
|---|---|
| *<milliseconds>* | Time period in milliseconds. Valid values are from 1000 to 3600000.<br>Setting this value to 0 indicates an unspecified reachable-time. |

**Default** 0 milliseconds

**Mode** Interface Configuration for a VLAN interface, an Eth interface, an 802.1Q sub-interface, a local loopback interface, a PPP interface, a bridge, or a tunnel.

**Usage notes** This command specifies the reachable time of the current router to be announced in IPv6 Router Advertisements.

Advertisement flags will not be transmitted unless you have applied the **no ipv6 nd suppress-ra** command. This instruction is included in the example shown below.

**Example** To set the reachable-time in router advertisements on the VLAN interface vlan2 to be 1800000 milliseconds, enter the following commands:

```
awplus# configure terminal
awplus(config)# interface vlan2
awplus(config-if)# ipv6 nd reachable-time 1800000
awplus(config-if)# no ipv6 nd suppress-ra
```

To reset the reachable-time in router advertisements on the VLAN interface vlan2 to an unspecified reachable-time (0 milliseconds), enter the following commands:

```
awplus# configure terminal
awplus(config)# interface vlan2
awplus(config-if)# no ipv6 nd reachable-time
```

To set the reachable-time in router advertisements on the PPP interface ppp0 to be 1800000 milliseconds, enter the following commands:

```
awplus# configure terminal
awplus(config)# interface ppp0
awplus(config-if)# ipv6 nd reachable-time 1800000
awplus(config-if)# no ipv6 nd suppress-ra
```

To reset the reachable-time in router advertisements on the PPP interface ppp0 to an unspecified reachable-time (0 milliseconds), enter the following commands:

```
awplus# configure terminal
awplus(config)# interface ppp0
awplus(config-if)# no ipv6 nd reachable-time
```

**Related commands**

ipv6 nd suppress-ra

ipv6 nd prefix

# ipv6 nd retransmission-time

**Overview** Use this command to specify the advertised retransmission interval for Neighbor Solicitation in milliseconds between IPv6 Routers.

Use the **no** variant of this command to reset the retransmission time to the default (1 second).

**Syntax**

```
ipv6 nd retransmission-time <milliseconds>
no ipv6 nd retransmission-time
```

| Parameter | Description |
|---|---|
| *<milliseconds>* | Time period in milliseconds. Valid values are from 1000 to 3600000. |

**Default** 1000 milliseconds (1 second)

**Mode** Interface Configuration for a VLAN interface, an Eth interface, an 802.1Q sub-interface, a local loopback interface, a PPP interface, a bridge, or a tunnel.

**Examples** To set the retransmission-time of Neighbor Solicitation on the VLAN interface vlan2 to be 800000 milliseconds, enter the following commands:

```
awplus# configure terminal
awplus(config)# interface vlan2
awplus(config-if)# ipv6 nd retransmission-time 800000
```

To reset the retransmission-time of Neighbor Solicitation on the VLAN interface vlan2 to the default 1000 milliseconds (1 second), enter the following commands:

```
awplus# configure terminal
awplus(config)# interface vlan2
awplus(config-if)# no ipv6 nd retransmission-time
```

To set the retransmission-time of Neighbor Solicitation on the PPP interface ppp0 to be 800000 milliseconds, enter the following commands:

```
awplus# configure terminal
awplus(config)# interface ppp0
awplus(config-if)# ipv6 nd retransmission-time 800000
```

To reset the retransmission-time of Neighbor Solicitation on the PPP interface ppp0 to the default 1000 milliseconds (1 second), enter the following commands:

```
awplus# configure terminal
awplus(config)# interface ppp0
awplus(config-if)# no ipv6 nd retransmission-time
```

**Related commands**

ipv6 nd suppress-ra

ipv6 nd prefix

# ipv6 nd suppress-ra

**Overview**

Use this command to inhibit IPv6 Router Advertisement (RA) transmission for the current interface. Router advertisements are used when applying IPv6 stateless auto-configuration.

Use **no** parameter with this command to enable Router Advertisement transmission.

**Syntax**

```
ipv6 nd suppress-ra
no ipv6 nd suppress-ra
```

**Default**

Router Advertisement (RA) transmission is suppressed by default.

**Mode**

Interface Configuration for a VLAN interface, an Eth interface, an 802.1Q sub-interface, a local loopback interface, a PPP interface, a bridge, or a tunnel.

**Example**

To enable the transmission of router advertisements from vlan2 on the device, use the following commands:

```
awplus# configure terminal
awplus(config)# interface vlan2
awplus(config-if)# no ipv6 nd suppress-ra
```

To enable the transmission of router advertisements from ppp0 on the router, use the following commands:

```
awplus# configure terminal
awplus(config)# interface ppp0
awplus(config-if)# no ipv6 nd suppress-ra
```

**Related commands**

ipv6 nd ra-interval

ipv6 nd prefix

# ipv6 neighbor

**Overview** Use this command to add a static IPv6 neighbor entry.

Use the **no** variant of this command to remove a specific IPv6 neighbor entry.

**Syntax**

```
ipv6 neighbor <ipv6-address> <vlan-name> <mac-address>
<port-list>
```

```
no ipv6 neighbor <ipv6-address> <vlan-name> <port-list>
```

| Parameter | Description |
|---|---|
| *<ipv6-address>* | Specify the neighbor's IPv6 address in the format X:X::X:X. |
| *<vlan-name>* | Specify the neighbor's VLAN name. |
| *<mac-address>* | Specify the MAC hardware address in hexadecimal notation in the format HHHH.HHHH.HHHH. |
| *<port-list>* | Specify the port number, or port range. |

**Mode** Global Configuration

**Usage notes** Use this command to clear a specific IPv6 neighbor entry. To clear all dynamic address entries, use the clear ipv6 neighbors command.

**Example** To create a static neighbor entry for IPv6 address 2001:0db8::a2, on vlan2, with MAC address 0000.cd28.0880, on port1.0.1, use the command:

```
awplus# configure terminal
```

```
awplus(config)# ipv6 neighbor 2001:0db8::a2 vlan2
0000.cd28.0880 port1.0.1
```

**Related commands**

clear ipv6 neighbors

show ipv6 neighbors

# ipv6 opportunistic-nd

**Overview**

Use this command to enable opportunistic neighbor discovery for the global IPv6 ND cache. Opportunistic neighbor discovery changes the behavior for unsolicited ICMPv6 ND packet forwarding on the device.

Use the **no** variant of this command to disable opportunistic neighbor discovery for the global IPv6 ND cache.

**Syntax**

```
ipv6 opportunistic-nd
no ipv6 opportunistic-nd
```

**Default**

Opportunistic neighbor discovery is disabled by default.

**Mode**

Global Configuration

**Usage notes**

When opportunistic neighbor discovery is enabled, the device will reply to any received unsolicited ICMPv6 ND packets. The source MAC address for the unsolicited ICMPv6 ND packet is added to the IPv6 ND cache, so the device forwards the ICMPv6 ND packet. When opportunistic neighbor discovery is disabled, the source MAC address for the ICMPv6 packet is not added to the IPv6 ND cache, so the ICMPv6 ND packet is not forwarded by the device.

**Examples**

To enable opportunistic neighbor discovery for the IPv6 ND cache, enter:

```
awplus# configure terminal
awplus(config)# ipv6 opportunistic-nd
```

To disable opportunistic neighbor discovery for the IPv6 ND cache, enter:

```
awplus# configure terminal
awplus(config)# no ipv6 opportunistic-nd
```

**Related commands**

arp opportunistic-nd

show ipv6 neighbors

show running-config interface

# ipv6 route

**Overview**

This command adds a static IPv6 route to the Routing Information Base (RIB). If this route is the best route for the destination, then your device adds it to the Forwarding Information Base (FIB). Your device uses the FIB to advertise routes to neighbors and forward packets.

The **no** variant of this command removes the static route.

**Syntax**

```
ipv6 route <dest-prefix> <dest-prefix/length>
[<src-prefix/length>] {<gateway-ip>|<gateway-name>}
[<distvalue>]
```

```
no ipv6 route <dest-prefix> <dest-prefix/length>
[<src-prefix/length>] {<gateway-ip>|<gateway-name>}
[<distvalue>]
```

| Parameter | Description |
|---|---|
| *<dest-prefix/ length>* | Specifies the IP destination prefix. The IPv6 address prefix uses the format X:X::/prefix-length. The prefix-length is usually set between 0 and 64. |
| *<src-prefix/length>* | Specifies the IP source prefix. The IPv6 address prefix uses the format X:X::/prefix-length. The prefix-length is usually set between 0 and 64. |
| *<gateway-ip>* | Specifies the IP gateway (or next hop) address. The IPv6 address uses the format X:X::X:X/Prefix-Length. The prefix-length is usually set between 0 and 64. |
| *<gateway-name>* | Specifies the name of the gateway (or next hop) interface. |
| *<distvalue>* | Specifies the administrative distance for the route. Valid values are from 1 to 255. |

**Mode**

Global Configuration

**Usage notes**

You can use administrative distance to determine which routes take priority over other routes.

**Example**

```
awplus# configure terminal
awplus(config)# ipv6 route 2001:0db8::1/128 vlan2 32
```

**Validation Commands**

show running-config

show ipv6 route

ipv6 multihoming

**Command changes** Version 5.5.0-0.3: parameter **src-prefix** added

# ipv6 unreachables

**Overview** Use this command to enable ICMPv6 (Internet Control Message Protocol version 6) type 1, destination unreachable, messages.

Use the **no** variant of this command to disable destination unreachable messages. This prevents an attacker from using these messages to discover the topology of a network.

**Syntax**

```
ipv6 unreachables
no ipv6 unreachables
```

**Default** Destination unreachable messages are enabled by default.

**Mode** Global Configuration

**Usage notes** When a device receives a packet for a destination that is unreachable it returns an ICMPv6 type 1 message. This message includes a reason code, as per the table below. An attacker can use these messages to obtain information regarding the topology of a network. Disabling destination unreachable messages, using the **no ipv6 unreachables** command, secures your network against this type of probing.

***NOTE:*** *Disabling ICMPv6 destination unreachable messages breaks applications such as traceroute, which depend on these messages to operate correctly.*

Table 25-1: ICMPv6 type 1 reason codes and description

| Code | Description [RFC] |
|---|---|
| 0 | No route to destination [RFC4443] |
| 1 | Communication with destination administratively prohibited [RFC4443] |
| 2 | Beyond scope of source address [RFC4443] |
| 3 | Address unreachable [RF4443] |
| 4 | Port unreachable [RFC4443] |
| 5 | Source address failed ingress/egress policy [RFC4443] |
| 6 | Reject route to destination [RFC4443 |
| 7 | Error in Source Routing Header [RFC6554] |

**Example** To disable destination unreachable messages, use the commands

```
awplus# configure terminal
awplus(config)# no ipv6 unreachables
```

To enable destination unreachable messages, use the commands

```
awplus# configure terminal
awplus(config)# ipv6 unreachables
```

# optimistic-nd

**Overview**

Use this command to enable the optimistic neighbor discovery feature for both IPv4 and IPv6.

Use the **no** variant of this command to disable the optimistic neighbor discovery feature.

**Syntax**

```
optimistic-nd
no optimistic-nd
```

**Default**

The optimistic neighbor discovery feature is enabled by default.

**Mode**

Interface Configuration for a VLAN interface.

**Usage notes**

The optimistic neighbor discovery feature allows the device, after learning an IPv4 or IPv6 neighbor, to refresh the neighbor before it is deleted from the ARP or neighbor tables. The optimistic neighbor discovery feature enables the device to sustain L3 traffic switching to a neighbor without interruption.

If a neighbor receiving optimistic neighbor solicitations does not answer optimistic neighbor solicitations with neighbor advertisements, then the device puts the neighbor entry into the 'stale' state, and subsequently deletes it from the L3 switching tables.

**Examples**

To enable the optimistic neighbor discovery feature on vlan2, use the following commands:

```
awplus# configure terminal
awplus(config)# interface vlan2
awplus(config-if)# optimistic-nd
```

To disable the optimistic neighbor discovery feature on vlan2, use the following commands:

```
awplus# configure terminal
awplus(config)# interface vlan2
awplus(config-if)# no optimistic-nd
```

**Related commands**

show running-config

# ping ipv6

**Overview** This command sends a query to another IPv6 host (send Echo Request messages).

**Syntax**

```
ping ipv6 {<host>|<ipv6-address>} [repeat
{<1-2147483647>|continuous}] [size <10-1452>] [interface
<interface-list>] [timeout <1-65535>]
```

| Parameter | Description |
|---|---|
| *<ipv6-addr>* | The destination IPv6 address. The IPv6 address uses the format X:X::X:X. |
| *<hostname>* | The destination hostname. |
| repeat | Specify the number of ping packets to send. |
| *<1-2147483647>* | Specify repeat count. The default is 5. |
| size *<10-1452>* | The number of data bytes to send, excluding the 8 byte ICMP header. The default is 56 (64 ICMP data bytes). |
| interface *<interface-list>* | The interface or range of configured IP interfaces to use as the source in the IP header of the ping packet. The interface can be one of:<br>• a PPP interface (e.g. ppp0)<br>• an Eth interface (e.g. eth1)<br>• an 802.1Q Ethernet sub-interface (e.g. eth1.10, where '10' is the VLAN ID specified by the **encapsulation dot1q** command)<br>• a VLAN (e.g. vlan2)<br>• a bridge interface (e.g. br0)<br>• a tunnel interface (e.g. tunnel0)<br>• a WWAN interface (e.g wwan0)<br>• the loopback interface (lo)<br>• a continuous range of interfaces, separated by a hyphen (e.g. ppp2-4)<br>• a comma-separated list (e.g. ppp0,ppp2-4). Do not mix interface types in a list.<br>You can only specify the interface when pinging a link local address. |
| timeout *<1-65535>* | The time in seconds to wait for echo replies if the ARP entry is present, before reporting that no reply was received. If no ARP entry is present, it does not wait. |
| repeat | Specify the number of ping packets to send. |
| *<1-2147483647>* | Specify repeat count. The default is 5. |
| continuous | Continuous ping. |

| Parameter | Description |
|---|---|
| `size <10-1452>` | The number of data bytes to send, excluding the 8 byte ICMP header. The default is 56 (64 ICMP data bytes). |
| `timeout <1-65535>` | The time in seconds to wait for echo replies if the ARP entry is present, before reporting that no reply was received. If no ARP entry is present, it does not wait. |

**Mode** User Exec and Privileged Exec

**Example**

```
awplus# ping ipv6 2001:0db8::a2
```

**Related commands** traceroute ipv6

# show ipv6 forwarding

**Overview** Use this command to display IPv6 forwarding status.

**Syntax** `show ipv6 forwarding`

**Mode** User Exec and Privileged Exec

**Example** `awplus# show ipv6 forwarding`

**Output** Figure 25-1: Example output from the **show ipv6 forwarding** command

```
awplus#show ipv6 forwarding
ipv6 forwarding is on
```

# show ipv6 interface

**Overview** Use this command to display brief information about interfaces and the IPv6 address assigned to them.

**Syntax** `show ipv6 interface [brief|<interface-list>] [nd]`

| Parameter | Description |
|---|---|
| `brief` | Specify this optional parameter to display brief IPv6 interface information. |
| `<interface-list>` | The interfaces to display information about. An interface-list can be:<br>• a PPP interface (e.g. ppp0)<br>• an Eth interface (e.g. eth1)<br>• an 802.1Q Ethernet sub-interface (e.g. eth1.10, where '10' is the VLAN ID specified by the **encapsulation dot1q** command)<br>• a VLAN (e.g. vlan2)<br>• a bridge interface (e.g. br0)<br>• a tunnel interface (e.g. tunnel0)<br>• a WWAN interface (e.g wwan0)<br>• the loopback interface (lo)<br>• a continuous range of interfaces, separated by a hyphen (e.g. ppp2-4)<br>• a comma-separated list (e.g. ppp0,ppp2-4). Do not mix interface types in a list.<br>The specified interfaces must exist. |
| nd | Specify this optional parameter for Neighbor Discovery configurations. |

**Mode** User Exec and Privileged Exec

**Examples** To display a brief list of all interfaces on a device, use the following command:

```
awplus# show ipv6 interface brief
```

**Output** Figure 25-2: Example output from the **show ipv6 interface brief** command

```
awplus#show ipv6 interface brief
Interface     IPv6-Address                                  Status      Protocol
lo            unassigned                                    admin up    running
vlan1         2001:db8::1/48                                admin up    down
              fe80::215:77ff:fee9:5c50/64
```

**Related commands** show interface brief

# show ipv6 neighbors

**Overview** Use this command to display all IPv6 neighbors.

For information on filtering and saving command output, see the "Getting_Started with AlliedWare Plus" Feature Overview and Configuration_Guide.

**Syntax**

```
show ipv6 neighbors
```

**Mode** User Exec and Privileged Exec

**Example** To display a devices IPv6 neighbors, use the following command:

```
awplus# show ipv6 neighbors
```

**Output** Figure 25-3: Example output of the **show ipv6 neighbors** command

```
IPv6 Address                      MAC Address    Interface          Port      Type
fe80::290:bff:fe3e:44dc           0090.0b3e.44dc vlan1              po3       dynamic
fd32:b1f0:dff7:ab03::1            0090.0b3e.44dc vlan1              po3       dynamic
fe80::2                           eccd.6ddf.6d41 vlan2              po4       static
```

**Related commands** clear ipv6 neighbors

ipv6 neighbor

# show ipv6 route

**Overview** Use this command to display the IPv6 routing table for a protocol or from a particular table.

For information on filtering and saving command output, see the "Getting Started with AlliedWare Plus" Feature Overview and Configuration Guide.

**Syntax**

```
show ipv6 route
[bgp|connected|database|ospf|rip|static|summary|<ipv6-address>
|<ipv6-prefix/prefix-length>]
```

| Parameter | Description |
|---|---|
| `bgp` | Displays only the routes learned from BGP. |
| `connected` | Displays only the routes learned from connected interfaces. |
| `database` | Displays only the IPv6 routing information extracted from the database. |
| `ospf` | Displays only the routes learned from OSPFv3. |
| `rip` | Displays only the routes learned from RIPng. |
| `static` | Displays only the IPv6 static routes you have configured. |
| `summary` | Displays summary information from the IPv6 routing table. |
| *<ipv6-address>* | Displays the routes for the specified address in the IPv6 routing table. |
| *<ipv6-prefix>/<prefix-length>* | Displays only the routes for the specified IPv6 prefix. |

**Mode** User Exec and Privileged Exec

**Example** To display all IPv6 routes with all parameters turned on, use the following command:

```
awplus# show ipv6 route
```

To display all database entries for all IPv6 routes, use the following command:

```
awplus# show ipv6 route database
```

**Output** Figure 25-4: Example output of the **show ipv6 route** command

```
IPv6 Routing Table
Codes: C - connected, S - static, R - RIP, O - OSPF, B - BGP
S   ::/0 [1/0] via 2001::a:0:0:c0a8:a6, vlan10
C   2001:db8::a:0:0:0:0/64 via ::, vlan10
C   2001:db8::14:0:0:0:0/64 via ::, vlan20
C   2001:db8::0:0:0:0/64 via ::, vlan30
C   2001:db8::28:0:0:0:0/64 via ::, vlan40
C   2001:db8::fa:0:0:0:0/64 via ::, vlan250
C   2001:db8::/64 via ::, vlan250
C   2001:db8::/64 via ::, vlan40
C   2001:db8::/64 via ::, vlan20
C   2001:db8::/64 via ::, vlan10
```

**Output** Figure 25-5: Example output of the **show ipv6 route database** command

```
IPv6 Routing Table
Codes: C - connected, S - static, R - RIP, O - OSPF, B - BGP
> - selected route, * - FIB route, p - stale info
Timers: Uptime

S   ::/0 [1/0] via 2001::a:0:0:c0a8:a01 inactive, 6d22h12m
         [1/0] via 2001::fa:0:0:c0a8:fa01 inactive, 6d22h12m
```

# show ipv6 route summary

**Overview** Use this command to display the summary of the current NSM RIB entries.

For information on filtering and saving command output, see the "Getting Started with AlliedWare Plus" Feature Overview and Configuration Guide.

**Syntax**

```
show ipv6 route summary
```

**Mode** User Exec and Privileged Exec

**Example** To display IP route summary, use the following command:

```
awplus# show ipv6 route summary
```

**Output** Figure 25-6: Example output from the **show ipv6 route summary** command

```
IPv6 routing table name is Default-IPv6-Routing-Table(0)
IPv6 routing table maximum-paths is 4
RouteSource     Networks
connected       4
rip             5
Total           9
FIB             5
```

**Related commands** show ip route database

# traceroute ipv6

**Overview** Use this command to trace the route to the specified IPv6 host.

**Syntax**

```
traceroute ipv6 {<ipv6-addr>|<hostname>}
```

| Parameter | Description |
|---|---|
| *<ipv6-addr>* | The destination IPv6 address. The IPv6 address uses the format X:X::X:X. |
| *<hostname>* | The destination hostname. |

**Mode** User Exec and Privileged Exec

**Example** To run a traceroute for the IPv6 address 2001:0db8::a2, use the following command:

```
awplus# traceroute ipv6 2001:0db8::a2
```

**Related commands** ping ipv6

# 26 Routing Commands

## Introduction

**Overview** This chapter provides an alphabetical reference of routing commands that are common across the routing IP protocols. For more information, see the Route Selection Feature Overview and Configuration Guide.

**Command List**


- "ip route" on page 910
- "ipv6 route" on page 913
- "max-fib-routes" on page 915
- "max-static-routes" on page 917
- "maximum-paths" on page 918
- "show ip route" on page 919
- "show ip route database" on page 922
- "show ip route summary" on page 925
- "show ipv6 route" on page 927
- "show ipv6 route summary" on page 929

# ip route

**Overview**

This command adds a static route to the Routing Information Base (RIB). If this route is the best route for the destination, then your device adds it to the Forwarding Information Base (FIB). Your device uses the FIB to advertise routes to neighbors and forward packets.

When using VRF (Virtual Routing and Forwarding), you can use this command to configure a static inter-VRF route to a destination network that is reachable by a remote gateway located in a different VRF instance. Note that to apply the command in this way, the ip route static inter-vrf command must be in enabled (its default condition). For more information about VRF, see the VRF Feature Overview and Configuration Guide and the VRF-lite Commands chapter.

The **no** variant of this command removes the static route from the RIB and FIB.

**Syntax**

```
ip route <subnet&mask> {<gateway-ip>|<interface>} [<distance>]
no ip route <subnet&mask> {<gateway-ip>|<interface>}
[<distance>]
```

**Syntax (VRF-lite)**

```
ip route [vrf <vrf-name>] <subnet&mask> [<gateway-ip>]
[<interface>] [<distance>]
no ip route [vrf <vrf-name>] <subnet&mask> [<gateway-ip>]
[<interface>] [<distance>]
```

| Parameter | Description |
|---|---|
| *<subnet&mask>* | The IPv4 address of the destination subnet defined using either a prefix length or a separate mask specified in one of the following formats:<br>• The IPv4 subnet address in dotted decimal notation followed by the subnet mask, also in dotted decimal notation.<br>• The IPv4 subnet address in dotted decimal notation, followed by a forward slash, then the prefix length. |
| *<gateway-ip>* | The IPv4 address of the gateway device. |
| *<interface>* | The interface that connects your device to the network. Enter the name of the VLAN or its VID. You can also enter 'null' as an interface. Specify a 'null' interface to add a null or blackhole route to the switch.<br>The gateway IP address or the interface is required if VRF-lite is not configured.<br>If VRF-lite is configured: When adding a static intra-VRF route, you must specify either the gateway IP address or the interface.<br>When adding a static inter-VRF route, you must specify both the gateway IP address and the interface. |
| *<distance>* | The administrative distance for the static route in the range 1 to 255. Static routes by default have an administrative distance of 1, which gives them the highest priority possible. |

| Parameter | Description |
|---|---|
| `vrf` | Applies the command to the specified VRF instance. |
| *<vrf-name>* | The name of the VRF instance to enter IPv4 Address-Family mode for. |

**Mode** Global Configuration

**Default** The default administrative distance for a static route is 1.

**Usage notes** You can use administrative distance to determine which routes take priority over other routes.

Specify a 'Null' interface to add a null or blackhole route to the switch. A null or blackhole route is a routing table entry that does not forward packets, so any packets sent to it are dropped.

**Examples** To add the destination 192.168.3.0 with the mask 255.255.255.0 as a static route available through the device at 10.10.0.2 with the default administrative distance, use the commands:

```
awplus# configure terminal
awplus(config)# ip route 192.168.3.0 255.255.255.0 10.10.0.2
```

To remove the destination 192.168.3.0 with the mask 255.255.255.0 as a static route available through the device at 10.10.0.2 with the default administrative distance, use the commands:

```
awplus# configure terminal
awplus(config)# no ip route 192.168.3.0 255.255.255.0 10.10.0.2
```

To specify a null or blackhole route 192.168.4.0/24, so packets forwarded to this route are dropped, use the commands:

```
awplus# configure terminal
awplus(config)# ip route 192.168.4.0/24 null
```

To add the destination 192.168.3.0 with the mask 255.255.255.0 as a static route available through the device at 10.10.0.2 with an administrative distance of 128, use the commands:

```
awplus# configure terminal
awplus(config)# ip route 192.168.3.0 255.255.255.0 10.10.0.2
128
```

**Examples (VRF-lite)** To create a static route from source VRF instance red, to the subnet 192.168.50.0/24 with a next hop of 192.168.20.6, use the following commands for static intra-VRF routing configuration:

```
awplus# configure terminal
awplus(config)# ip route vrf red 192.168.50.0/24 192.168.20.6
```

To remove a static route from source VRF red, to the subnet 192.168.50.0/24 with a next hop of 192.168.20.6, use the following commands for static intra-VRF routing configuration:

```
awplus# configure terminal
awplus(config)# no ip route vrf red 192.168.50.0/24
192.168.20.6
```

To create a static route from source VRF red, to the subnet 192.168.50.0/24 with a next hop of 192.168.20.6 via vlan10, use the following commands for static inter-VRF routing configuration:

```
awplus# configure terminal
awplus(config)# ip route vrf red 192.168.50.0/24 192.168.20.6
vlan10
```

**Related commands**

show ip route

show ip route database

**Command changes**

Version 5.4.6-2.1: VRF-lite support added.

# ipv6 route

**Overview**

This command adds a static IPv6 route to the Routing Information Base (RIB). If this route is the best route for the destination, then your device adds it to the Forwarding Information Base (FIB). Your device uses the FIB to advertise routes to neighbors and forward packets.

The **no** variant of this command removes the static route.

**Syntax**

```
ipv6 route <dest-prefix> <dest-prefix/length>
[<src-prefix/length>] {<gateway-ip>|<gateway-name>}
[<distvalue>]
```

```
no ipv6 route <dest-prefix> <dest-prefix/length>
[<src-prefix/length>] {<gateway-ip>|<gateway-name>}
[<distvalue>]
```

| Parameter | Description |
|---|---|
| *<dest-prefix/ length>* | Specifies the IP destination prefix. The IPv6 address prefix uses the format X:X::/prefix-length. The prefix-length is usually set between 0 and 64. |
| *<src-prefix/length>* | Specifies the IP source prefix. The IPv6 address prefix uses the format X:X::/prefix-length. The prefix-length is usually set between 0 and 64. |
| *<gateway-ip>* | Specifies the IP gateway (or next hop) address. The IPv6 address uses the format X:X::X:X/Prefix-Length. The prefix-length is usually set between 0 and 64. |
| *<gateway-name>* | Specifies the name of the gateway (or next hop) interface. |
| *<distvalue>* | Specifies the administrative distance for the route. Valid values are from 1 to 255. |

**Mode**

Global Configuration

**Usage notes**

You can use administrative distance to determine which routes take priority over other routes.

**Example**

```
awplus# configure terminal
awplus(config)# ipv6 route 2001:0db8::1/128 vlan2 32
```

**Validation Commands**

show running-config

show ipv6 route

ipv6 multihoming

**Command changes** Version 5.5.0-0.3: parameter **src-prefix** added

# max-fib-routes

**Overview** This command enables you to control the maximum number of FIB routes configured. It operates by providing parameters that enable you to configure preset maximums and warning message thresholds.

***NOTE:*** *When using VRF-lite, this command applies to the Global VRF instance; to set the max-fib-routes for a user-defined VRF instance use the max-fib-routes (VRF) command. For static routes use the max-static-routes command for the Global VRF instance and the max-static-routes (VRF) command for a user-defined VRF instance.*

Use the **no** variant of this command to set the maximum number of FIB routes to the default of 4294967294 FIB routes.

**Syntax**

```
max-fib-routes <1-4294967294> [<1-100>|warning-only]
no max-fib-routes
```

| Parameter | Description |
|---|---|
| `max-fib-routes` | This is the maximum number of routes that can be stored in the device's Forwarding Information dataBase. In practice, other practical system limits would prevent this maximum being reached. |
| *<1-4294967294>* | The allowable configurable range for setting the maximum number of FIB-routes. |
| *<1-100>* | This parameter enables you to optionally apply a percentage value. This percentage will be based on the maximum number of FIB routes you have specified. This will cause a warning message to appear when your routes reach your specified percentage value. Routes can continue to be added until your configured maximum value is reached. |
| `warning-only` | This parameter enables you to optionally apply a warning message. If you set this option a warning message will appear if your maximum configured value is reached. Routes can continue to be added until your device reaches either the maximum capacity value of 4294967294, or a practical system limit. |

**Default** The default number of FIB routes is the maximum number of FIB routes (4294967294).

**Mode** Global Configuration

**Examples** To set the maximum number of dynamic routes to 2000 and warning threshold of 75%, use the following commands:

```
awplus# config terminal
awplus(config)# max-fib-routes 2000 75
```

**Related commands** max-fib-routes (VRF)

# max-static-routes

**Overview** Use this command to set the maximum number of static routes, excluding FIB (Forwarding Information Base) routes.

***NOTE:*** *For FIB routes use the max-fib-routes command.*

Use the **no** variant of this command to set the maximum number of static routes to the default of 1024 static routes.

**Syntax**

```
max-static-routes <1-1024>
no max-static-routes
```

**Default** The default number of static routes is the maximum number of static routes (1024).

**Mode** Global Configuration

**Example** To reset the maximum number of static routes to the default maximum, use the command:

```
awplus# configure terminal
awplus(config)# no max-static-routes
```

***NOTE:*** *Static routes are applied before adding routes to the RIB (Routing Information Base). Therefore, rejected static routes will not appear in the running config.*

**Related commands** max-fib-routes

# maximum-paths

**Overview** This command enables ECMP on your device, and sets the maximum number of paths that each route has in the Forwarding Information Base (FIB). ECMP is enabled by default.

The **no** variant of this command sets the maximum paths to the default of 4.

ECMP path calculations are flow-based. This means that packets from the same flow will always be sent on the same path.

**Syntax**

```
maximum-paths <1-8>
no maximum-paths
```

| Parameter | Description |
|---|---|
| *<1-8>* | The maximum number of paths that a route can have in the FIB. |

**Default** By default the maximum number of paths is 4.

**Mode** Global Configuration

**Examples** To set the maximum number of paths for each route in the FIB to 5, use the command:

```
awplus# configure terminal
awplus(config)# maximum-paths 5
```

To set the maximum paths for a route to the default of 4, use the command:

```
awplus# configure terminal
awplus(config)# no maximum-paths
```

# show ip route

**Overview** Use this command to display routing entries in the FIB (Forwarding Information Base). The FIB contains the best routes to a destination, and your device uses these routes when forwarding traffic. You can display a subset of the entries in the FIB based on protocol.

To modify the lines displayed, use the | (output modifier token); to save the output to a file, use the > output redirection token.

**VRF-lite** If VRF-lite is configured, you can display routing entries in the FIB associated with either the global routing domain or a named VRF.

**Syntax**

```
show ip route [bgp|connected|ospf|rip|static|
<ip-addr>|<ip-addr/prefix-length>]
```

**Syntax (VRF-lite)**

```
show ip route {vrf <vrf-name>|global}
[bgp|connected|ospf|rip|static]
```

| Parameter | Description |
|---|---|
| `global` | If VRF-lite is configured, apply the command to the global routing and forwarding table. |
| `vrf` | Apply the command to the specified VRF instance. |
| `<vrf-name>` | The name of the VRF instance. |
| `bgp` | Displays only the routes learned from BGP. |
| `connected` | Displays only the routes learned from connected interfaces. |
| `ospf` | Displays only the routes learned from OSPF. |
| `rip` | Displays only the routes learned from RIP. |
| `static` | Displays only the static routes you have configured. |
| `<ip-addr>` | Displays the routes for the specified address. Enter an IPv4 address. |
| `<ip-addr/prefix-length>` | Displays the routes for the specified network. Enter an IPv4 address and prefix length. |

**Mode** User Exec and Privileged Exec

**Examples** To display the static routes in the FIB, use the command:

```
awplus# show ip route static
```

To display the OSPF routes in the FIB, use the command:

```
awplus# show ip route ospf
```

**Example (VRF-lite)** To display all routing entries in the FIB associated with a VRF instance `red`, use the command:

```
awplus# show ip route vrf red
```

**Output** Each entry in the output from this command has a code preceding it, indicating the source of the routing entry. For example, O indicates OSPF as the origin of the route. The first few lines of the output list the possible codes that may be seen with the route entries.

Typically, route entries are composed of the following elements:

- code
- a second label indicating the sub-type of the route
- network or host IP address
- administrative distance and metric
- next hop IP address
- outgoing interface name
- time since route entry was added

Figure 26-1: Example output from the **show ip route** command

```
Codes: C - connected, S - static, R - RIP, B - BGP
       O - OSPF, IA - OSPF inter area
       N1 - OSPF NSSA external type 1, N2 - OSPF NSSA external type 2
       E1 - OSPF external type 1, E2 - OSPF external type 2
       * - candidate default

O       10.10.37.0/24 [110/11] via 10.10.31.16, vlan2, 00:20:54
C       3.3.3.0/24 is directly connected, vlan1
C       10.10.31.0/24 is directly connected, vlan2
C       10.70.0.0/24 is directly connected, vlan4
O E2    14.5.1.0/24 [110/20] via 10.10.31.16, vlan2, 00:18:56
C       33.33.33.33/32 is directly connected, lo
```

**Connected Route** The connected route entry consists of:

```
C       10.10.31.0/24 is directly connected, vlan2
```

This route entry denotes:

- Route entries for network 10.10.31.0/24 are derived from the IP address of local interface vlan2.
- These routes are marked as Connected routes (C) and always preferred over routes for the same network learned from other routing protocols.

**OSPF Route** The OSPF route entry consists of:

```
O       10.10.37.0/24 [110/11] via 10.10.31.16, vlan2, 00:20:54
```

This route entry denotes:

- This route in the network 10.10.37.0/24 was added by OSPF.
- This route has an administrative distance of 110 and metric/cost of 11.
- This route is reachable via next hop 10.10.31.16.
- The outgoing local interface for this route is vlan2.
- This route was added 20 minutes and 54 seconds ago.

**OSPF External Route**

The OSPF external route entry consists of:

```
O E2    14.5.1.0/24 [110/20] via 10.10.31.16, vlan2, 00:18:56
```

This route entry denotes that this route is the same as the other OSPF route explained above; the main difference is that it is a Type 2 External OSPF route.

**Related commands**

ip route

maximum-paths

show ip route database

**Command changes**

Version 5.4.6-2.1: VRF-lite support added.

# show ip route database

**Overview** This command displays the routing entries in the RIB (Routing Information Base).

When multiple entries are available for the same prefix, RIB uses the routes' administrative distances to choose the best route. All best routes are entered into the FIB (Forwarding Information Base). To view the routes in the FIB, use the show ip route command.

To modify the lines displayed, use the | (output modifier token); to save the output to a file, use the > output redirection token.

**Syntax**

```
show ip route database [bgp|connected|ospf|rip|static]
```

**Syntax (VRF-lite)**

```
show ip route [vrf <vrf-name>|global] database
[bgp|connected|ospf|rip|static]
```

| Parameter | Description |
|---|---|
| `global` | If VRF-lite is configured, apply the command to the global routing and forwarding table. |
| `vrf` | Apply the command to the specified VRF instance. |
| `<vrf-name>` | The name of the VRF instance. |
| `bgp` | Displays only the routes learned from BGP. |
| `connected` | Displays only the routes learned from connected interfaces. |
| `ospf` | Displays only the routes learned from OSPF. |
| `rip` | Displays only the routes learned from RIP. |
| `static` | Displays only the static routes you have configured. |

**Mode** User Exec and Privileged Exec

**Example** To display the static routes in the RIB, use the command:

```
awplus# show ip route database static
```

**Output** Figure 26-2: Example output from the **show ip route database** command

```
Codes: C - connected, S - static, R - RIP, B - BGP
       O - OSPF, IA - OSPF inter area
       N1 - OSPF NSSA external type 1, N2 - OSPF NSSA external type 2
       E1 - OSPF external type 1, E2 - OSPF external type 2
              > - selected route, * - FIB route, p - stale info

O    *> 9.9.9.9/32 [110/31] via 10.10.31.16, vlan2, 00:19:21
O       10.10.31.0/24 [110/1] is directly connected, vlan2, 00:28:20
C    *> 10.10.31.0/24 is directly connected, vlan2
S    *> 10.10.34.0/24 [1/0] via 10.10.31.16, vlan2
O       10.10.34.0/24 [110/31] via 10.10.31.16, vlan2, 00:21:19
O    *> 10.10.37.0/24 [110/11] via 10.10.31.16, vlan2, 00:21:19
C    *> 10.30.0.0/24 is directly connected, vlan6
S    *> 11.22.11.0/24 [1/0] via 10.10.31.16, vlan2
O E2 *> 14.5.1.0/24 [110/20] via 10.10.31.16,vlan2, 00:19:21
O       16.16.16.16/32 [110/11] via 10.10.31.16, vlan2, 00:21:19
S    *> 16.16.16.16/32 [1/0] via 10.10.31.16, vlan2
O    *> 17.17.17.17/32 [110/31] via 10.10.31.16, vlan2, 00:21:19
C    *> 45.45.45.45/32 is directly connected, lo
O    *> 55.55.55.55/32 [110/21] via 10.10.31.16, vlan2, 00:21:19
C    *> 127.0.0.0/8 is directly connected, lo
```

**Example (VRF-lite)** To display all routing entries in the RIB associated with a VRF instance `red`, use the command:

```
awplus# show ip route vrf red database
```

**Output** Figure 26-3: Example output from the **show ip route vrf red database** command

```
[VRF: red]
Codes: C - connected, S - static, R - RIP, B - BGP
       O - OSPF, IA - OSPF inter area
       N1 - OSPF NSSA external type 1, N2 - OSPF NSSA external type 2
       E1 - OSPF external type 1, E2 - OSPF external type 2
              > - selected route, * - FIB route, p - stale info

O       192.168.10.0/24 [110/1] is directly connected, vlan1, 06:45:51
C    *> 192.168.10.0/24 is directly connected, vlan1
B     > 192.168.33.0/24 [20/0] via 192.168.30.3, 06:45:52
O E2 *> 192.168.110.0/24 [110/20] via 192.168.10.2, vlan1, 06:45:00
O E2 *> 192.168.111.0/24 [110/20] via 192.168.10.2, vlan1, 06:45:00
```

The routes added to the FIB are marked with a `*`. When multiple routes are available for the same prefix, the best route is indicated with the > symbol. All unselected routes have neither the `*` nor the > symbol.

```
S    *> 10.10.34.0/24 [1/0] via 10.10.31.16, vlan2
O       10.10.34.0/24 [110/31] via 10.10.31.16, vlan2, 00:21:19
```

These route entries denote:

- The same prefix was learned from OSPF and from static route configuration.

- Since this static route has a lower administrative distance than the OSPF route (110), the static route (1) is selected and installed in the FIB.

If the static route becomes unavailable, then the device automatically selects the OSPF route and installs it in the FIB.

**Related commands**

maximum-paths

show ip route

**Command changes**

Version 5.4.6-2.1: VRF-lite support added.

# show ip route summary

**Overview** This command displays a summary of the current RIB (Routing Information Base) entries.

To modify the lines displayed, use the | (output modifier token); to save the output to a file, use the > output redirection token.

**Syntax**

```
show ip route summary
```

**Syntax (VRF-lite)**

```
show ip route summary [vrf <vrf-name>|global]
```

| Parameter | Description |
|---|---|
| `vrf` | Specific VRF instance. |
| `<vrf-name>` | The name of the VRF instance. |
| `global` | The global routing and forwarding table. |

**Mode** User Exec and Privileged Exec

**Example** To display a summary of the current RIB entries, use the command:

```
awplus# show ip route summary
```

**Output** Figure 26-4: Example output from the **show ip route summary** command

```
IP routing table name is Default-IP-Routing-Table(0)
IP routing table maximum-paths is 4
Route Source    Networks
connected       5
ospf            2
Total           8
```

**Example (VRF-lite)** To display a summary of the current RIB entries associated with a VRF instance red, use the command:

```
awplus# show ip route summary vrf red
```

**Output** Figure 26-5: Example output from the **show ip route summary vrf red** command

```
IP routing table name is Default-IP-Routing-Table(0)
IP routing table maximum-paths is 4
Route Source    Networks
connected       1
Total           1
FIB             0

[VRF: red]
Route Source    Networks
connected       1
ospf            2
Total           3
```

**Related commands**

show ip route

show ip route database

**Command changes**

Version 5.4.6-2.1: VRF-lite support added.

# show ipv6 route

**Overview** Use this command to display the IPv6 routing table for a protocol or from a particular table.

For information on filtering and saving command output, see the "Getting Started with AlliedWare Plus" Feature Overview and Configuration Guide.

**Syntax**

```
show ipv6 route
[bgp|connected|database|ospf|rip|static|summary|<ipv6-address>
|<ipv6-prefix/prefix-length>]
```

| Parameter | Description |
|---|---|
| `bgp` | Displays only the routes learned from BGP. |
| `connected` | Displays only the routes learned from connected interfaces. |
| `database` | Displays only the IPv6 routing information extracted from the database. |
| `ospf` | Displays only the routes learned from OSPFv3. |
| `rip` | Displays only the routes learned from RIPng. |
| `static` | Displays only the IPv6 static routes you have configured. |
| `summary` | Displays summary information from the IPv6 routing table. |
| *<ipv6-address>* | Displays the routes for the specified address in the IPv6 routing table. |
| *<ipv6-prefix>/<prefix-length>* | Displays only the routes for the specified IPv6 prefix. |

**Mode** User Exec and Privileged Exec

**Example** To display all IPv6 routes with all parameters turned on, use the following command:

```
awplus# show ipv6 route
```

To display all database entries for all IPv6 routes, use the following command:

```
awplus# show ipv6 route database
```

**Output** Figure 26-6: Example output of the **show ipv6 route** command

```
IPv6 Routing Table
Codes: C - connected, S - static, R - RIP, O - OSPF, B - BGP
S   ::/0 [1/0] via 2001::a:0:0:c0a8:a6, vlan10
C   2001:db8::a:0:0:0:0/64 via ::, vlan10
C   2001:db8::14:0:0:0:0/64 via ::, vlan20
C   2001:db8::0:0:0:0/64 via ::, vlan30
C   2001:db8::28:0:0:0:0/64 via ::, vlan40
C   2001:db8::fa:0:0:0:0/64 via ::, vlan250
C   2001:db8::/64 via ::, vlan250
C   2001:db8::/64 via ::, vlan40
C   2001:db8::/64 via ::, vlan20
C   2001:db8::/64 via ::, vlan10
```

**Output** Figure 26-7: Example output of the **show ipv6 route database** command

```
IPv6 Routing Table
Codes: C - connected, S - static, R - RIP, O - OSPF, B - BGP
> - selected route, * - FIB route, p - stale info
Timers: Uptime

S   ::/0 [1/0] via 2001::a:0:0:c0a8:a01 inactive, 6d22h12m
         [1/0] via 2001::fa:0:0:c0a8:fa01 inactive, 6d22h12m
```

# show ipv6 route summary

**Overview** Use this command to display the summary of the current NSM RIB entries.

For information on filtering and saving command output, see the "Getting Started with AlliedWare Plus" Feature Overview and Configuration Guide.

**Syntax** `show ipv6 route summary`

**Mode** User Exec and Privileged Exec

**Example** To display IP route summary, use the following command:

```
awplus# show ipv6 route summary
```

**Output** Figure 26-8: Example output from the **show ipv6 route summary** command

```
IPv6 routing table name is Default-IPv6-Routing-Table(0)
IPv6 routing table maximum-paths is 4
RouteSource     Networks
connected       4
rip             5
Total           9
FIB             5
```

**Related commands** show ip route database

# 27 RIP Commands

## Introduction

**Overview**

This chapter provides an alphabetical reference of commands used to configure RIP.

For information about configuring RIP, see the RIP Feature Overview and Configuration Guide.

**Command List**


- "accept-lifetime" on page 932
- "address-family ipv4 (RIP)" on page 934
- "alliedware-behavior" on page 935
- "cisco-metric-behavior (RIP)" on page 937
- "clear ip rip route" on page 938
- "debug rip" on page 940
- "default-information originate (RIP)" on page 941
- "default-metric (RIP)" on page 942
- "distance (RIP)" on page 943
- "distribute-list (RIP)" on page 944
- "fullupdate (RIP)" on page 945
- "ip summary-address rip" on page 946
- "ip prefix-list" on page 947
- "ip rip authentication key-chain" on page 949
- "ip rip authentication mode" on page 951
- "ip rip authentication string" on page 954
- "ip rip receive-packet" on page 956
- "ip rip receive version" on page 957

- "ip rip send-packet" on page 958
- "ip rip send version" on page 959
- "ip rip send version 1-compatible" on page 962
- "ip rip split-horizon" on page 964
- "key" on page 965
- "key chain" on page 966
- "key-string" on page 967
- "maximum-prefix" on page 968
- "neighbor (RIP)" on page 969
- "network (RIP)" on page 970
- "passive-interface (RIP)" on page 972
- "recv-buffer-size (RIP)" on page 973
- "redistribute (RIP)" on page 974
- "restart rip graceful" on page 976
- "rip restart grace-period" on page 977
- "route (RIP)" on page 978
- "router rip" on page 979
- "send-lifetime" on page 980
- "show debugging rip" on page 982
- "show ip prefix-list" on page 983
- "show ip protocols rip" on page 984
- "show ip rip" on page 985
- "show ip rip database" on page 986
- "show ip rip interface" on page 987
- "show ip rip vrf database" on page 988
- "show ip rip vrf interface" on page 989
- "timers (RIP)" on page 990
- "undebug rip" on page 992
- "version (RIP)" on page 993

# accept-lifetime

**Overview** Use this command to specify the time period during which the authentication key on a key chain is received as valid.

Use the **no** variant of this command to remove a specified time period for an authentication key on a key chain as set previously with the **accept-lifetime** command.

**Syntax**

```
accept-lifetime <start-date> {<end-date>|
duration <seconds>|infinite}
```

```
no accept-lifetime
```

| Parameter | Description | |
|---|---|---|
| *<start-date>* | Specifies the start time and date in the format: *<hh:mm:ss> <day> <month> <year>* or *<hh:mm:ss> <month> <day> <year>*, where: | |
| | *<hh:mm:ss>* | The time of the day, in hours, minutes and seconds |
| | *<day>* | <1-31> The day of the month |
| | *<month>* | The month of the year (the first three letters of the month, for example, Jan) |
| | *<year>* | <1993-2035> The year |
| *<end-date>* | Specifies the end time and date in the format: *<hh:mm:ss> <day> <month> <year>* or *<hh:mm:ss> <month> <day> <year>*, where: | |
| | *<hh:mm:ss>* | The time of the day, in hours, minutes and seconds |
| | *<day>* | <1-31> The day of the month |
| | *<month>* | The month of the year (the first three letters of the month, for example, Jan) |
| | *<year>* | <1993-2035> The year |
| *<seconds>* | <1-2147483646> Duration of the key in seconds. | |
| infinite | Never expires. | |

**Mode** Keychain-key Configuration

**Examples** The following examples show the setting of accept-lifetime for key 1 on the key chain named “mychain”.

```
awplus# configure terminal
awplus(config)# key chain mychain
awplus(config-keychain)# key 1
awplus(config-keychain-key)# accept-lifetime 03:03:01 Sep 3
2016 04:04:02 Oct 6 2016
```

or:

```
awplus# configure terminal
awplus(config)# key chain mychain
awplus(config-keychain)# key 1
awplus(config-keychain-key)# accept-lifetime 03:03:01 3 Sep
2016 04:04:02 6 Oct 2016
```

**Related commands**

key

key-string

key chain

send-lifetime

# address-family ipv4 (RIP)

**Overview** This command enters the IPv4 address-family command mode. In this mode you can configure address-family specific parameters for a specific VRF (RIP) instance.

**Syntax**

```
address-family ipv4 vrf <vrf-name>
no address-family ipv4 vrf <vrf-name>
```

| Parameter | Description |
|---|---|
| `ipv4` | Configure parameters relating to the RIP exchange of IPv4 prefixes. |
| `vrf` | Apply this command to a VRF instance. |
| `<vrf-name>` | The name of the VRF instance. |

**Mode** Router Configuration

**Usage** To leave Address Family mode and return to Router Configuration mode, use the exit-address-family command.

**Example** In this example the address family "green" is entered, and then exited by using the exit-address-family command.

```
awplus# configure terminal
awplus(config)# router rip
awplus(config-router)# address-family ipv4 vrf green
awplus(config-router-af)# exit-address-family
awplus(config-router)#
```

**Related commands** exit-address-family

**Command changes** Version 5.4.6-2.1: VRF-lite support added.

# alliedware-behavior

**Overview** This command configures your device to exhibit AlliedWare behavior when sending RIPv1 response/update messages. Configuring for this behavior may be necessary if you are replacing an AlliedWare device with an AlliedWare Plus device and wish to ensure consistent RIPv1 behavior.

Use the **no** variant of this command to implement AlliedWare Plus behavior.

This command has no impact on devices running RIPv2. Reception and transmission can be independently altered to conform to AlliedWare standard.

**Syntax**

```
alliedware-behavior {rip1-send|rip1-recv}
no alliedware-behavior {rip1-send|rip1-recv}
```

| Parameter | Description |
|---|---|
| `rip1-send` | Configures the router to behave in AlliedWare mode when **sending** update messages. |
| `rip1-recv` | Configures the router to behave in AlliedWare mode when **receiving** update messages. |

**Default** By default when sending out RIPv1 updates on an interface, if the prefix (learned through RIPv2 or otherwise redistributed into RIP) being advertised does not match the subnetting used on the outgoing RIPv1 interface it will be filtered. The **alliedware-behavior** command returns your router's RIPv1 behavior to the AlliedWare format, where the prefix will be advertised as-is.

For example, if a RIPv1 update is being sent over interface 192.168.1.4/26, by default the prefix 192.168.1.64/26 will be advertised, but the prefix 192.168.1.144/28 will be filtered because the mask /28 does not match the interface's mask of /26. If **alliedware-behavior rip1-send** is configured, 192.168.1.144 would be sent as-is.

**Mode** Router Configuration

**Examples** To configure your device for **AlliedWare**-like behavior when sending and receiving RIPv1 update messages, enter the commands:

```
awplus# configure terminal
awplus(config)# router rip
awplus(config-router)# alliedware-behavior rip1-send
awplus(config-router)# alliedware-behavior rip1-recv
```

To return your device to **AlliedWare Plus**-like behavior when sending and receiving RIPv1 update messages, enter the commands:

```
awplus# configure terminal
awplus(config)# router rip
awplus(config-router)# no alliedware-behavior rip1-send
awplus(config-router)# no alliedware-behavior rip1-recv
```

**Validation Commands**

show ip protocols rip

show running-config

**Related commands**

fullupdate (RIP)

# cisco-metric-behavior (RIP)

**Overview**

Use this command to enable or disable the RIP routing metric update to conform to Cisco's implementation. This command is provided to allow inter-operation with older Cisco devices that do not conform to the RFC standard for RIP route metrics.

Use the **no** variant of this command to disable this feature.

**Syntax**

```
cisco-metric-behavior {enable|disable}
no cisco-metric-behavior
```

| Parameter | Description |
|---|---|
| `enable` | Enables updating the metric consistent with Cisco. |
| `disable` | Disables updating the metric consistent with Cisco. |

**Default**

By default, the Cisco metric-behavior is disabled.

**Mode**

Router Configuration

**Examples**

To enable the routing metric update to behave as per the Cisco implementation, enter the commands:

```
awplus# configure terminal
awplus(config)# router rip
awplus(config-router)# cisco-metric-behavior enable
```

To disable the routing metric update to behave as per the default setting, enter the commands:

```
awplus# configure terminal
awplus(config)# router rip
awplus(config-router)# no cisco-metric-behavior
```

**Validation Commands**

show running-config

# clear ip rip route

**Overview** Use this command to clear specific data from the RIP routing table.

**Syntax**

```
clear ip rip route <ip-dest-network/prefix-length>
clear ip rip route
{static|connected|rip|ospf|bgp|invalid-routes|all}
```

**Syntax (VRF-lite)**

```
clear ip rip [vrf <vrf-name>] route
<ip-dest-network/prefix-length>
clear ip rip [vrf <vrf-name>] route
{static|connected|rip|ospf|bgp|invalid-routes|all}
```

| Parameter | Description |
|---|---|
| `vrf` | Apply this command to a VRF instance. |
| *<vrf-name>* | The name of the VRF instance. |
| *<ip-dest-network/prefix-length>* | Removes entries which exactly match this destination address from RIP routing table. Enter the IP address and prefix length of the destination network. |
| `static` | Removes static entries from the RIP routing table. |
| `connected` | Removes entries for connected routes from the RIP routing table. |
| `rip` | Removes only RIP routes from the RIP routing table. |
| `ospf` | Removes only OSPF routes from the RIP routing table. |
| `bgp` | Removes only BGP routes from the RIP routing table. |
| `invalid-routes` | Removes routes with metric 16 immediately. Otherwise, these routes are not removed until RIP times out the route after 2 minutes. |
| `all` | Clears the entire RIP routing table. |

**Mode** Privileged Exec

**Usage notes** Using this command with the **all** parameter clears the RIP table of all the routes.

**Examples** To clear the route 10.0.0.0/8 from the RIP routing table, use the following command:

```
awplus# clear ip rip route 10.0.0.0/8
```

**Examples (VRF-lite)** To clear RIP routes associated with the VRF instance 'red' for OSPF routes, use the following command:

```
awplus# clear ip rip vrf red route ospf
```

To clear the route 10.0.0.0/8 from the RIP routing table for the VRF instance 'red', use the following command:

```
awplus# clear ip rip vrf red route 10.0.0.0/8
```

**Command changes**

Version 5.4.6-2.1: VRF-lite support added.

# debug rip

**Overview** Use this command to specify the options for the displayed debugging information for RIP events and RIP packets.

Use the **no** variant of this command to disable the specified debug option.

**Syntax**

```
debug rip {events|nsm|<packet>|all}
no debug rip {events|nsm|<packet>|all}
```

| Parameter | Description |
|---|---|
| `events` | RIP events debug information is displayed. |
| `nsm` | RIP and NSM communication is displayed. |
| `<packet>` | `packet [recv\|send] [detail]` Specifies RIP packets only. |
| `recv` | Specifies that information for received packets be displayed. |
| `send` | Specifies that information for sent packets be displayed. |
| `detail` | Displays detailed information for the sent or received packet. |
| `all` | Displays all RIP debug information. |

**Default** Disabled

**Mode** Privileged Exec and Global Configuration

**Example** The following example displays information about the RIP packets that are received and sent out from the device.

```
awplus# debug rip packet
```

**Related commands** undebug rip

# default-information originate (RIP)

**Overview** Use this command to generate a default route into the Routing Information Protocol (RIP).

Use the **no** variant of this command to disable this feature.

**Syntax**

```
default-information originate
no default-information originate
```

**Default** Disabled

**Mode** Router Configuration

**Usage** If routes are being redistributed into RIP and the router's route table contains a default route, within one of the route categories that are being redistributed, the RIP protocol will advertise this default route, irrespective of whether the **default-information originate** command has been configured or not. However, if the router has not redistributed any default route into RIP, but you want RIP to advertise a default route anyway, then use this command.

This will cause RIP to create a default route entry in the RIP database. The entry will be of type RS (Rip Static). Unless actively filtered out, this default route will be advertised out every interface that is sending RIP. Split horizon does not apply to this route, as it is internally generated. This operates quite similarly to the OSPF **default-information originate always** command.

**Example**

```
awplus# configure terminal
awplus(config)# router rip
awplus(config-router)# default-information originate
```

# default-metric (RIP)

**Overview**

Use this command to specify the metrics to be assigned to redistributed RIP routes.

Use the **no** variant of this command to reset the RIP metric back to its default (1).

**Syntax**

```
default-metric <metric>
no default-metric [<metric>]
```

| Parameter | Description |
|---|---|
| *<metric>* | <1-16> Specifies the value of the default metric. |

**Default**

By default, the RIP metric value is set to 1.

**Mode**

RIP Router Configuration or RIP Router Address Family Configuration for a VRF instance.

**Usage notes**

This command is used with the redistribute (RIP) command to make the routing protocol use the specified metric value for all redistributed routes, regardless of the original protocol that the route has been redistributed from.

**Examples**

This example assigns the cost of 10 to the routes that are redistributed into RIP.

```
awplus# configure terminal
awplus(config)# router rip
awplus(config-router)# default-metric 10
awplus(config-router)# redistribute ospf
awplus(config-router)# redistribute connected
```

**Example (VRF-lite)**

This example assigns the cost of 10 to the routes which are redistributed into RIP for the VRF instance blue.

```
awplus# configure terminal
awplus(config)# router rip
awplus(config-router)# address family ipv4 vrf blue
awplus(config-router-af)# default-metric 10
awplus(config-router-af)# redistribute ospf
awplus(config-router-af)# redistribute connected
```

**Related commands**

redistribute (RIP)

**Command changes**

Version 5.4.6-2.1: VRF-lite support added.

# distance (RIP)

**Overview**

This command sets the administrative distance for RIP routes. Your device uses this value to select between two or more routes to the same destination obtained from two different routing protocols. The route with the smallest administrative distance value is added to the Forwarding Information Base (FIB). For more information, see the Route Selection Feature Overview and Configuration Guide.

The **no** variant of this command sets the administrative distance for the RIP route to the default of 120.

**Syntax**

```
distance <1-255> [<ip-addr/prefix-length>]
no distance [<1-255>] [<ip-addr/prefix-length>]
```

| Parameter | Description |
|---|---|
| *<1-255>* | The administrative distance value you are setting for this RIP route. |
| *<ip-addr/prefix-length>* | The network IP address and prefix-length that you are changing the administrative distance for. |

**Mode**

RIP Router Configuration or RIP Router Address Family Configuration for a VRF instance.

**Examples**

To set the administrative distance to 8 for the RIP routes within the 10.0.0.0/8 network, use the commands:

```
awplus# configure terminal
awplus(config)# router rip
awplus(config-router)# distance 8 10.0.0.0/8
```

To set the administrative distance to the default of 120 for the RIP routes within the 10.0.0.0/8 network, use the commands:

```
awplus# configure terminal
awplus(config)# router rip
awplus(config-router)# no distance 8 10.0.0.0/8
```

**Example (VRF-lite)**

This example assigns a cost of 10 to the routes for the VRF instance blue, when redistributed into RIP.

```
awplus# configure terminal
awplus(config)# router rip
awplus(config-router)# address family ipv4 blue
awplus(config-router-af)# distance 10
```

**Command changes**

Version 5.4.6-2.1: VRF-lite support added.

# distribute-list (RIP)

**Overview** Use this command to filter incoming or outgoing route updates using the prefix-list.

When running VRF-lite, this command can be applied to a specific VRF instance.

Use the **no** variant of this command to disable this feature.

**Syntax**

```
distribute-list prefix <prefix-list> {in|out} [<interface>]
no distribute-list prefix <prefix-list> {in|out}  [<interface>]
```

| Parameter | Description |
|---|---|
| `prefix` | Filter prefixes in routing updates. |
| `<prefix-list>` | Specifies the name of the IPv4 prefix-list to use. |
| `in` | Filter incoming routing updates. |
| `out` | Filter outgoing routing updates. |
| `<interface>` | The interface on which distribute-list applies. For instance: `vlan2` |

**Default** Disabled

**Mode** RIP Router Configuration or RIP Router Address Family Configuration for a VRF instance.

**Usage notes** Filter out incoming or outgoing route updates using prefix-list. If you do not specify the name of the interface, the filter will be applied to all interfaces.

**Examples** In this example the following commands are used to apply a prefix list called myfilter to filter incoming routing updates in `vlan2`

```
awplus# configure terminal
awplus(config)# router rip
awplus(config-router)# distribute-list prefix myfilter in vlan2
```

**Example (VRF-lite)** This example applies the commands of the previous example, but to a specific VRF named blue:

```
awplus# configure terminal
awplus(config)# router rip
awplus(config-router)# address-family ipv4 vrf blue
awplus(config-router-af)# distribute-list prefix myfilter in
vlan2
```

**Command changes** Version 5.4.6-2.1: VRF-lite support added.

# fullupdate (RIP)

**Overview**

Use this command to specify which routes RIP should advertise when performing a triggered update. By default, when a triggered update is sent, RIP will only advertise those routes that have changed since the last update. When **fullupdate** is configured, the device advertises the full RIP route table in outgoing triggered updates, including routes that have not changed. This enables faster convergence times, or allows inter-operation with legacy network equipment, but at the expense of larger update messages.

Use the **no** variant of this command to disable this feature.

**Syntax**

```
fullupdate
no fullupdate
```

**Default**

By default this feature is disabled.

**Mode**

RIP Router Configuration or RIP Router Address Family Configuration for a VRF instance.

**Usage (VRF-lite)**

If VRF-lite is configured, you can apply this command for either the global routing environment, or to a specific VRF instance.

**Example**

To enable the fullupdate (RIP) function, use the commands:

```
awplus# configure terminal
awplus(config)# router rip
awplus(config-router)# fullupdate
```

**Example (VRF-lite)**

To enable the full update (RIP) function on the VRF instance named 'blue', use the commands:

```
awplus# configure terminal
awplus(config)# router rip
awplus(config-router)# address-family ipv4 vrf blue
awplus(config-router-af)# fullupdate
```

**Command changes**

Version 5.4.6-2.1: VRF-lite support added.

# ip summary-address rip

**Overview**

Use this command to configure a summary IP address on a RIPv2 interface.

Use the **no** variant of this command to remove a summary IP address from a selected RIPv2 interface.

**Syntax**

```
ip summary-address rip {<ip-address/prefix-length>}
no ip summary-address rip {<ip-address/prefix-length>}
```

| Parameter | Description |
|---|---|
| *<ip-address/prefix-length>* | The summary IPv4 address to be advertised |

**Usage notes**

Route summarization is a technique that helps network administrators in reducing the size of the routing tables by advertising a single super-network that covers a range of subnets.

You statically configure an IP summary address on a router interface. The router then advertises the summary address downstream through this interface. This means that:

- all the routers that are downstream from the configured interface will receive only the summary route, and none of the child routes via the RIP advertisement.
- As long as any of the child routes is valid, the router will propagate the summary route. But when the last child that is part of the summarized range disappears, then the router will stop advertising the summary route through the interface.

This command will be rejected if there is no IP address configured on the interface.

***NOTE:*** *Manual route summarization is not supported when the interface/router is running in RIPv1.*

**Example**

The subnets: 10.4.1.0/24, 10.4.2.128/25, 10.4.3.0/24 can be summarized and advertised as 10.4.0.0/16 on vlan1 using the following commands:

```
awplus# configure terminal
awplus(config)# interface vlan1
awplus(config-if)# ip summary-address rip 10.4.0.0/16
```

**Related commands**

show ip rip database

show ip protocols rip

**Command changes**

Version 5.4.8-0.2 command added

# ip prefix-list

**Overview** Use this command to create an entry for an IPv4 prefix list.

Use the **no** variant of this command to delete the IPv4 prefix-list entry.

**Syntax**

```
ip prefix-list <list-name> [seq <1-429496725>] {deny|permit}
{any|<ip-prefix>} [ge <0-32>] [le <0-32>]
ip prefix-list <list-name> description <text>
ip prefix-list sequence-number
no ip prefix-list <list-name> [seq <1-429496725>]
no ip prefix-list <list-name> [description <text>]
no ip prefix-list sequence-number
```

| Parameter | Description |
|---|---|
| *<list-name>* | Specifies the name of a prefix list. |
| seq *<1-429496725>* | Sequence number of the prefix list entry. |
| deny | Specifies that the prefixes are excluded from the list. |
| permit | Specifies that the prefixes are included in the list. |
| *<ip-prefix>* | Specifies the IPv4 address and length of the network mask in dotted decimal in the format A.B.C.D/M. |
| any | Any prefix match. Same as **0.0.0.0/0 le 32**. |
| ge*<0-32>* | Specifies the minimum prefix length to be matched. |
| le*<0-32>* | Specifies the maximum prefix length to be matched. |
| *<text>* | Text description of the prefix list. |
| sequence-number | Specify sequence numbers included or excluded in prefix list. |

**Mode** Global Configuration

**Usage notes** When the device processes a prefix list, it starts to match prefixes from the top of the prefix list, and stops whenever a permit or deny occurs. To promote efficiency, use the **seq** parameter and place common permits or denials towards the top of the list. If you do not use the **seq** parameter, the sequence values are generated in a sequence of 5.

The parameters **ge** and **le** specify the range of the prefix lengths to be matched. When setting these parameters, set the **le** value to be less than 32, and the **ge** value to be less than or equal to the **le** value and greater than the ip-prefix mask length.

Prefix lists implicitly exclude prefixes that are not explicitly permitted in the prefix list. This means if a prefix that is being checked against the prefix list reaches the end of the prefix list without matching a permit or deny, this prefix will be denied.

**Example**

In the following sample configuration, the last **ip prefix-list** command in the below list matches all, and the first **ip prefix-list** command denies the IP network 76.2.2.0:

```
awplus(config)# router bgp 100
awplus(config-router)# network 172.1.1.0
awplus(config-router)# network 172.1.2.0
awplus(config-router)# neighbor 10.6.5.3 remote-as 300
awplus(config-router)# neighbor 10.6.5.3 prefix-list mylist out
awplus(config-router)# exit
awplus(config)# ip prefix-list mylist seq 5 deny 76.2.2.0/24
awplus(config)# ip prefix-list mylist seq 100 permit any
```

To deny the IP addresses between 10.0.0.0/14 (10.0.0.0 255.252.0.0) and 10.0.0.0/22 (10.0.0.0 255.255.252.0) within the 10.0.0.0/8 (10.0.0.0 255.0.0.0) addressing range, enter the following commands:

```
awplus# configure terminal
awplus(config)# ip prefix-list mylist seq 12345 deny 10.0.0.0/8
ge 14 le 22
```

**Related commands**

neighbor prefix-list

clear ip prefix-list

show ip prefix-list

# ip rip authentication key-chain

**Overview** Use this command to enable RIPv2 authentication on an interface and specify the name of the key chain to be used.

Use the **no** variant of this command to disable this function.

**Syntax**

```
ip rip authentication key-chain <key-chain-name>
no ip rip authentication key-chain
```

| Parameter | Description |
|---|---|
| *<key-chain-name>* | Specify the name of the key chain. This is an alpha-numeric string, but it cannot include spaces. |

**Mode** Interface Configuration for a VLAN interface or a PPP interface.

**Usage notes** Use this command to perform authentication on the interface. Not configuring the key chain results in no authentication at all.

The AlliedWare Plus™ implementation provides the choice of configuring authentication for single key or multiple keys at different times. Use the ip rip authentication string command for single key authentication. Use the ip rip authentication key-chain command for multiple keys authentication. See the RIP Feature Overview and Configuration Guide for illustrated RIP configuration examples.

For multiple key authentication, use the following steps to configure a route to enable RIPv2 authentication using multiple keys at different times:

1) Define a key chain with a key chain name, using the following commands:

```
awplus# configure terminal
awplus(config)# key chain <key-chain-name>
```

2) Define a key on this key chain, using the following command:

```
awplus(config-keychain)# key <keyid>
```

3) Define the password used by the key, using the following command:

```
awplus(config-keychain-key)# key-string <key-password>
```

4) Enable authentication on the desired interface and specify the key chain to be used, using the following commands:

```
awplus# configure terminal
awplus(config)# interface <id>
awplus(config-if)# ip rip authentication key-chain
<key-chain-name>
```

5) Specify the mode of authentication for the given interface (text or MD5), using the following command:

```
awplus(config-if)# ip rip authentication mode {md5|text}
```

**Example** In the following example of a configuration for multiple keys authentication, a password "toyota" is set for key 1 in key chain "cars". Authentication is enabled on vlan2 and the authentication mode is set to MD5:

```
awplus# configure terminal
awplus(config)# key chain cars
awplus(config-keychain)# key 1
awplus(config-keychain-key)# key-string toyota
awplus(config-keychain-key)# accept-lifetime 10:00:00 Oct 08
2016 duration 43200
awplus(config-keychain-key)# send-lifetime 10:00:00 Oct 08 2016
duration 43200
awplus(config-keychain-key)# exit
awplus(config-keychain)# exit
awplus(config)# interface vlan2
awplus(config-if)# ip rip authentication key-chain cars
awplus(config-if)# ip rip authentication mode md5
```

**Example** In the following example, the VLAN interface vlan23 is configured to use key-chain authentication with the keychain "mykey". See the key command for a description of how a key chain is created.

```
awplus# configure terminal
awplus(config)# interface vlan23
awplus(config-if)# ip rip authentication key-chain mykey
```

The following example shows md5 authentication configured on the PPP interface ppp0, ensuring authentication of RIP packets received on this interface.

```
awplus# configure terminal
awplus(config)# interface ppp0
awplus(config-if)# ip rip authentication key-chain mykey
```

**Related commands**

accept-lifetime

send-lifetime

ip rip authentication mode

ip rip authentication string

key

key chain

# ip rip authentication mode

**Overview**

Use this command to specify the type of authentication mode used for RIP v2 packets.

Use the **no** variant of this command to restore clear text authentication.

**Syntax**

```
ip rip authentication mode {md5|text}
no ip rip authentication mode
```

| Parameter | Description |
|---|---|
| `md5` | Uses the keyed MD5 authentication algorithm. |
| `text` | Specifies clear text or simple password authentication. |

**Default**

Text authentication is enabled

**Mode**

Interface Configuration for a VLAN interface or a PPP interface.

**Usage notes**

The AlliedWare Plus™ implementation provides the choice of configuring authentication for single key or multiple keys at different times. Use the ip rip authentication string command for single key authentication. Use the ip rip authentication key-chain command for multiple keys authentication. See the RIP Feature Overview and Configuration Guide for illustrated RIP configuration examples.

**Usage: single key**

Use the following steps to configure a route to enable RIPv2 authentication using a single key or password:

1) Define the authentication string or password used by the key for the desired interface, using the following commands:

```
awplus# configure terminal
awplus(config)# interface <id>
awplus(config-if)# ip rip authentication string <auth-string>
```

2) Specify the mode of authentication for the given interface (text or MD5), using the following commands:

```
awplus# configure terminal
awplus(config)# interface <id>
awplus(config-if)# ip rip authentication mode {md5|text}
```

**Usage: multiple key**

For multiple keys authentication, use the following steps to configure a route to enable RIPv2 authentication using multiple keys at different times:

1) Define a key chain with a key chain name, using the following commands:

```
awplus# configure terminal
awplus(config)# key chain <key-chain-name>
```

2) Define a key on this key chain using the following command:

```
awplus(config-keychain)# key <keyid>
```

3) Define the password used by the key, using the following command:

```
awplus(config-keychain-key)# key-string <key-password>
```

4) Enable authentication on the desired interface and specify the key chain to be used, using the following commands:

```
awplus(config-if)# ip rip authentication key-chain
<key-chain-name>
```

5) Specify the mode of authentication for the given interface (text or MD5), using the following commands:

```
awplus(config-if)# ip rip authentication mode {md5|text}
```

**Example 1** In the following example of a configuration for multiple keys authentication, a password of "toyota" is set for key 1 in key chain "cars". Authentication is enabled on vlan2 and the authentication mode is set to MD5:

```
awplus# configure terminal
awplus(config)# key chain cars
awplus(config-keychain)# key 1
awplus(config-keychain-key)# key-string toyota
awplus(config-keychain-key)# accept-lifetime 10:00:00 Oct 08
2016 duration 43200
awplus(config-keychain-key)# send-lifetime 10:00:00 Oct 08 2016
duration 43200
awplus(config-keychain-key)# exit
awplus(config-keychain)# exit
awplus(config)# interface vlan2
awplus(config-if)# ip rip authentication key-chain cars
awplus(config-if)# ip rip authentication mode md5
```

**Example 2** The following example shows MD5 authentication configured on VLAN interface vlan2, ensuring authentication of RIP packets received on this interface.

```
awplus# configure terminal
awplus(config)# interface vlan2
awplus(config-if)# ip rip authentication mode md5
```

The following example shows md5 authentication configured on the PPP interface ppp0, ensuring authentication of RIP packets received on this interface.

```
awplus# configure terminal
awplus(config)# interface ppp0
awplus(config-if)# ip rip authentication mode md5
```

**Example 3** The following example specifies "mykey" as the authentication string with MD5 authentication, for the VLAN interface vlan2:

```
awplus# configure terminal
awplus(config)# interface vlan2
awplus(config-if)# ip rip authentication string mykey
awplus(config-if)# ip rip authentication mode md5
```

**Related commands**

ip rip authentication string

ip rip authentication key-chain

# ip rip authentication string

**Overview** Use this command to specify the authentication string or password used by a key.

Use the **no** variant of this command to remove the authentication string.

**Syntax**

```
ip rip authentication string <auth-string>
no ip rip authentication string
```

| Parameter | Description |
|---|---|
| *<auth-string>* | The authentication string or password used by a key. It is an alpha-numeric string and can include spaces. |

**Mode** Interface Configuration for a VLAN interface or a PPP interface.

**Usage notes** The AlliedWare Plus™ implementation provides the choice of configuring authentication for single key or multiple keys at different times. Use this command to specify the password for a single key on an interface. Use the ip rip authentication key-chain command for multiple keys authentication. For information about configuring RIP, see the RIP Feature Overview and Configuration Guide.

Use the following steps to configure a route to enable RIPv2 authentication using a single key or password:

1) Define the authentication string or password used by the key for the desired interface, using the following commands:

```
awplus# configure terminal
awplus(config)# interface <id>
```

2) Specify the mode of authentication for the given interface (text or MD5), using the following commands:

```
awplus# configure terminal
awplus(config-if)# ip rip authentication string <auth-string>
awplus(config)# interface <id>
awplus(config-if)# ip rip authentication mode {md5|text}
```

**Example** See the example below to specify `mykey` as the authentication string with MD5 authentication for the VLAN interface vlan2:

```
awplus# configure terminal
awplus(config)# interface vlan2
awplus(config-if)# ip rip authentication string mykey
awplus(config-if)# ip rip authentication mode md5
```

See the example below to specify `mykey` as the authentication string with MD5 authentication for the PPP interface ppp0:

```
awplus# configure terminal
awplus(config)# interface ppp0
awplus(config-if)# ip rip authentication string mykey
awplus(config-if)# ip rip authentication mode md5
```

**Example**

In the following example, the VLAN interface `vlan2` is configured to have an authentication string as `guest`. Any received RIP packet in that interface should have the same string as password.

```
awplus# configure terminal
awplus(config)# interface vlan2
awplus(config-if)# ip rip authentication string guest
```

In the following example, the PPP interface `ppp0` is configured to have an authentication string as `guest`. Any received RIP packet in that interface should have the same string as password.

```
awplus# configure terminal
awplus(config)# interface ppp0
awplus(config-if)# ip rip authentication string guest
```

**Related commands**

ip rip authentication key-chain

ip rip authentication mode

# ip rip receive-packet

**Overview** Use this command to configure the interface to enable the reception of RIP packets.

Use the **no** variant of this command to disable this feature.

**Syntax**

```
ip rip receive-packet
no ip rip receive-packet
```

**Default** Receive-packet is enabled

**Mode** Interface Configuration for a VLAN interface or a PPP interface.

**Example** This example shows packet receiving being turned on for the VLAN interface `vlan3`:

```
awplus# configure terminal
awplus(config)# interface vlan3
awplus(config-if)# ip rip receive-packet
```

This example shows packet receiving being turned on for the PPP interface `ppp0`:

```
awplus# configure terminal
awplus(config)# interface ppp0
awplus(config-if)# ip rip receive-packet
```

**Related commands** ip rip send-packet

# ip rip receive version

**Overview**

Use this command to specify the version of RIP packets accepted on an interface and override the setting of the version command.

Use the **no** variant of this command to use the setting specified by the version (RIP) command.

**Syntax**

```
ip rip receive version {[1][2]}
no ip rip receive version
```

| Parameter | Description |
|---|---|
| 1 | Specifies acceptance of RIP version 1 packets on the interface. |
| 2 | Specifies acceptance of RIP version 2 packets on the interface. |

**Default**

Version 2

**Mode**

Interface Configuration for a VLAN interface or a PPP interface.

**Usage notes**

This command applies to a specific VLAN interface and overrides any the version specified by the version (RIP) command.

RIP can be run in version 1 or version 2 mode. Version 2 has more features than version 1; in particular RIP version 2 supports authentication and classless routing. Once the RIP version is set, RIP packets of that version will be received and sent on all the RIP-enabled interfaces.

**Example**

In the following example, the VLAN interface `vlan3` is configured to receive both RIP version 1 and 2 packets:

```
awplus# configure terminal
awplus(config)# interface vlan3
awplus(config-if)# ip rip receive version 1 2
```

In the following example, PPP interface `ppp0` is configured to receive both RIP version 1 and 2 packets:

```
awplus# configure terminal
awplus(config)# interface ppp0
awplus(config-if)# ip rip receive version 1 2
```

**Related commands**

version (RIP)

# ip rip send-packet

**Overview** Use this command to enable sending RIP packets through the current interface.

Use the **no** variant of this command to disable this feature.

**Syntax**

```
ip rip send-packet
no ip rip send-packet
```

**Default** Send packet is enabled

**Mode** Interface Configuration for a VLAN interface or a PPP interface.

**Example** This example shows packet sending being turned on for the VLAN interface `vlan4`:

```
awplus# configure terminal
awplus(config)# interface vlan4
awplus(config-if)# ip rip send-packet
```

This example shows packet sending being turned on for the PPP interface `ppp0`:

```
awplus# configure terminal
awplus(config)# interface ppp0
awplus(config-if)# ip rip send-packet
```

**Related commands** ip rip receive-packet

# ip rip send version

**Overview** Use this command in Interface Configuration mode to specify the version of RIP packets sent on an interface and override the setting of the version (RIP) command. This mechanism causes RIP version 2 interfaces to send multicast packets instead of broadcasting packets.

Use the **no** variant of this command to use the setting specified by the version (RIP) command.

**Syntax**

```
ip rip send version {1|2|1 2|2 1}
no ip rip send version
```

| Parameter | Description |
|---|---|
| 1 | Specifies the sending of RIP version 1 packets out of an interface. |
| 2 | Specifies the sending of RIP version 2 packets out of an interface. |
| 12 | Specifies the sending of both RIP version 1 and RIP version 2 packets out of an interface. |
| 21 | Specifies the sending of both RIP version 2 and RIP version 1 packets out of an interface. |

**Default** RIP version 2 is enabled by default.

**Mode** Interface Configuration for a VLAN interface or a PPP interface.

**Usage notes** This command applies to a specific interface and overrides the version specified by the version (RIP) command.

RIP can be run in version 1 or version 2 mode. Version 2 has more features than version 1; in particular RIP version 2 supports authentication and classless routing. Once the RIP version is set, RIP packets of that version will be received and sent on all the RIP-enabled interfaces. Selecting version parameters 1 2 or 2 1 sends RIP version 1 and 2 packets.

Use the ip rip send version 1-compatible command in an environment where you cannot send multicast packets. For example, in environments where multicast is not enabled and where hosts do not listen to multicast.

**Examples** In the following example, the VLAN interface `vlan4` is configured to send both RIP version 1 and 2 packets.

```
awplus# configure terminal
awplus(config)# interface vlan4
awplus(config-if)# ip rip send version 1 2
```

In the following example, the VLAN interface `vlan4` is configured to send both RIP version 2 and 1 packets.

```
awplus# configure terminal
awplus(config)# interface vlan4
awplus(config-if)# ip rip send version 2 1
```

In the following example, the VLAN interface `vlan4` is configured to send RIP version 1 packets only.

```
awplus# configure terminal
awplus(config)# interface vlan4
awplus(config-if)# ip rip send version 1
```

In the following example, the VLAN interface `vlan4` is configured to send RIP version 2 packets only.

```
awplus# configure terminal
awplus(config)# interface vlan4
awplus(config-if)# ip rip send version 2
```

In the following example, the VLAN interface `vlan3` is configured to use the RIP version specified by the version (RIP) command.

```
awplus# configure terminal
awplus(config)# interface vlan3
awplus(config-if)# no ip rip send version
```

In the following example, the PPP interface `ppp0` is configured to send both RIP version 1 and 2 packets.

```
awplus# configure terminal
awplus(config)# interface ppp0
awplus(config-if)# ip rip send version 1 2
```

In the following example, the PPP interface `ppp0` is configured to send both RIP version 2 and 1 packets.

```
awplus# configure terminal
awplus(config)# interface ppp0
awplus(config-if)# ip rip send version 2 1
```

In the following example, the PPP interface `ppp0` is configured to send RIP version 1 packets only.

```
awplus# configure terminal
awplus(config)# interface ppp0
awplus(config-if)# ip rip send version 1
```

In the following example, the PPP interface `ppp0` is configured to send RIP version 2 packets only.

```
awplus# configure terminal
awplus(config)# interface ppp0
awplus(config-if)# ip rip send version 2
```

In the following example, the PPP interface `ppp2` is configured to use the RIP version specified by the version (RIP) command.

```
awplus# configure terminal
awplus(config)# interface ppp2
awplus(config-if)# no ip rip send version
```

**Related commands**

ip rip send version 1-compatible

version (RIP)

# ip rip send version 1-compatible

**Overview** Use this command in Interface Configuration mode to send RIP version 1 compatible packets from a RIP version 2 interfaces to other RIP Interfaces. This mechanism causes RIP version 2 interfaces to send broadcast packets instead of multicasting packets, and is used in environments where multicast is not enabled or where hosts do not listen to multicast.

Use the **no** variant of this command to use the setting specified by the version (RIP) command, and disable the broadcast of RIP version 2 packets that are sent as broadcast packets.

**Syntax**

```
ip rip send version 1-compatible
no ip rip send version
```

| Parameter | Description |
|---|---|
| `1-compatible` | Specify this parameter to send RIP version 1 compatible packets from a version 2 RIP interface to other RIP interfaces.<br>This mechanism causes version 2 RIP interfaces to broadcast packets instead of multicasting packets. |

**Default** RIP version 2 is enabled by default.

**Mode** Interface Configuration for a VLAN interface or a PPP interface.

**Usage notes** This command applies to a specific interface and overrides the version specified by the version (RIP) command.

RIP can be run in version 1 compatible mode. Version 2 has more features than version 1; in particular RIP version 2 supports authentication and classless routing. Once the RIP version is set, RIP packets of that version will be received and sent on all the RIP-enabled interfaces.

Use the ip rip send version command in an environment where you can send multicast packets. For example, in environments where multicast is enabled and where hosts listen to multicast.

**Examples** In the following example, the VLAN interface `vlan2` is configured to send RIP version 1- compatible packets.

```
awplus# configure terminal
awplus(config)# interface vlan2
awplus(config-if)# ip rip send version 1-compatible
```

In the following example, the VLAN interface `vlan3` is configured to use the RIP version specified by the version (RIP) command.

```
awplus# configure terminal
awplus(config)# interface vlan3
awplus(config-if)# no ip rip send version
```

In the following example, the PPP interface ppp1 is configured to send RIP version 1- compatible packets; so it broadcasts both RIP version 1 and 2 packets.

```
awplus# configure terminal
awplus(config)# interface ppp1
awplus(config-if)# ip rip send version 1-compatible
```

In the following example, the PPP interface ppp2 is configured to use the RIP version specified by the version (RIP) command.

```
awplus# configure terminal
awplus(config)# interface ppp2
awplus(config-if)# no ip rip send version
```

**Related commands**

ip rip send version

version (RIP)

# ip rip split-horizon

**Overview** Use this command to turn on the split-horizon mechanism on the interface.

Use the **no** variant of this command to disable this mechanism.

**Syntax**

```
ip rip split-horizon [poisoned]
no ip rip split-horizon
```

| Parameter | Description |
|---|---|
| poisoned | Performs split-horizon with poison-reverse. See "Usage" below for more information. |

**Default** Split horizon poisoned

**Mode** Interface Configuration for a VLAN interface or a PPP interface.

**Usage notes** Use this command to avoid including routes in updates sent to the same gateway from which they were learned. Without the **poisoned** parameter, using this command causes routes learned from a neighbor to be omitted from updates sent to that neighbor. With the **poisoned** parameter, using this command causes such routes to be included in updates, but sets their metrics to infinity. This advertises that these routes are not reachable.

**Example** To turn on split horizon poisoned on ppp0, use the following commands:

```
awplus# configure terminal
awplus(config)# interface ppp0
awplus(config-if)# ip rip split-horizon poisoned
```

# key

**Overview** Use this command to manage, add and delete authentication keys in a key-chain.

Use the **no** variant of this command to delete the authentication key.

**Syntax**

```
key <keyid>
no key <keyid>
```

| Parameter | Description |
|---|---|
| *<keyid>* | <0-2147483647> Key identifier number. |

**Mode** Keychain Configuration

**Usage** This command allows you to enter the keychain-key mode where a password can be set for the key.

**Example** The following example configures a key number 1 and shows the change into a **keychain- key** command mode prompt.

```
awplus# configure terminal
awplus(config)# key chain mychain
awplus(config-keychain)# key 1
awplus(config-keychain-key)#
```

**Related commands**

key chain

key-string

accept-lifetime

send-lifetime

# key chain

**Overview** Use this command to enter the key chain management mode and to configure a key chain with a key chain name.

Use the **no** variant of this command to remove the key chain and all configured keys.

**Syntax**

```
key chain <key-chain-name>
no key chain <key-chain-name>
```

| Parameter | Description |
|---|---|
| *<key-chain-name>* | Specify the name of the key chain to manage. |

**Mode** Global Configuration

**Usage** This command allows you to enter the keychain mode from which you can specify keys on this key chain.

**Example** The following example shows the creation of a key chain named `mychain` and the change into **keychain** mode prompt.

```
awplus# configure terminal
awplus(config)# key chain mychain
awplus(config-keychain)#
```

**Related commands**

key

key-string

accept-lifetime

send-lifetime

# key-string

**Overview** Use this command to define the password to be used by a key.

Use the **no** variant of this command to remove a password.

**Syntax**

```
key-string <key-password>
no key-string
```

| Parameter | Description |
|---|---|
| *<key-password>* | A string of characters to be used as a password by the key. |

**Mode** Keychain-key Configuration

**Usage** Use this command to specify passwords for different keys.

**Examples** In the following example, the password for `key1` in the key chain named `mychain` is set to password **prime**:

```
awplus# configure terminal
awplus(config)# key chain mychain
awplus(config-keychain)# key 1
awplus(config-keychain-key)# key-string prime
```

In the following example, the password for `key1` in the key chain named `mychain` is removed:

```
awplus# configure terminal
awplus(config)# key chain mychain
awplus(config-keychain)# key 1
awplus(config-keychain-key)# no key-string
```

**Related commands**

key

key chain

accept-lifetime

send-lifetime

# maximum-prefix

**Overview** Use this command to configure the maximum number of RIP routes stored in the routing table.

Use the **no** variant of this command to disable all limiting of the number of RIP routes stored in the routing table.

**Syntax**

```
maximum-prefix <maxprefix> [<threshold>]
no maximum-prefix
```

| Parameter | Description |
|---|---|
| *<maxprefix>* | <1-65535> The maximum number of RIP routes allowed. |
| *<threshold>* | <1-100> Percentage of maximum routes to generate a warning. The default threshold is 75%. |

**Mode** Router Configuration

**Example** To configure the maximum number of RIP routes to 150, use the following command:

```
awplus# configure terminal
awplus(config)# router rip
awplus(config-router)# maximum-prefix 150
```

# neighbor (RIP)

**Overview** Use this command to specify a neighbor router. It is used for each router to which you wish to send unicast RIP updates.

Use the **no** variant of this command to stop sending unicast updates to the specific router.

**Syntax**

```
neighbor <ip-address>
no neighbor <ip-address>
```

| Parameter | Description |
|---|---|
| *<ip-address>* | The IP address of a neighboring router with which the routing information will be exchanged. |

**Default** Disabled

**Mode** Router Configuration

**Usage** Use this command to exchange nonbroadcast routing information. It can be used multiple times for additional neighbors.

The passive-interface (RIP) command disables sending routing updates on an interface. Use the `neighbor` command in conjunction with the passive-interface (RIP) to send routing updates to specific neighbors.

**Example** To specify the neighbor router to 1.1.1.1, use the following command:

```
awplus# configure terminal
awplus(config)# router rip
awplus(config-router)# passive-interface vlan1
awplus(config-router)# neighbor 1.1.1.1
```

**Related commands** passive-interface (RIP)

# network (RIP)

**Overview** Use this command to activate the transmission of RIP routing information on the defined network.

Use the **no** variant of this command to remove the specified network or VLAN as one that runs RIP.

**Syntax**

```
network {<network-address>[/<subnet-mask>]|<vlan-name>}
no network {<network-address>[/<subnet-mask>]|<vlan-name>}
```

| Parameter | Description |
|---|---|
| *<network-address>* [*/<subnet-mask>*] | Specifies the network address to run RIP. Entering a subnet mask (or prefix length) for the network address is optional. Where no mask is entered, the device will attempt to apply a mask that is appropriate to the class (A, B, or C) of the address entered, e.g. an IP address of 10.0.0.0 will have a prefix length of 8 applied to it. |
| *<vlan-name>* | Specify a VLAN name with up to 32 alphanumeric characters to run RIP. |

**Default** Disabled

**Mode** RIP Router Configuration or RIP Router Address Family Configuration for a VRF instance.

**Usage notes** Use this command to specify networks, or VLANs, to which routing updates will be sent and received. The connected routes corresponding to the specified network, or VLANs, will be automatically advertised in RIP updates. RIP updates will be sent and received within the specified network or VLAN.

When running VRF-lite, this command can be applied to a VRF instance.

**Example** Use the following commands to activate RIP routing updates on network 172.16.20.0/24:

```
awplus# configure terminal
awplus(config)# router rip
awplus(config-router)# network 172.16.20.0/24
```

**Example (VRF-lite)** To activate RIP routing updates on vlan3 for VRF instance 'blue'.

```
awplus# configure terminal
awplus(config)# router rip
awplus(config-router)# address-family ipv4 vrf blue
awplus(config-router-af)# network vlan3
```

**Related commands**

show ip rip

show running-config

clear ip rip route

**Command changes**

Version 5.4.6-2.1: VRF-lite support added.

# passive-interface (RIP)

**Overview**

Use this command to block RIP broadcasts on the interface.

Use the **no** variant of this command to disable this function.

**Syntax**

```
passive-interface <interface>
no passive-interface <interface>
```

| Parameter | Description |
|---|---|
| *<interface>* | Specifies the interface name. |

**Default**

Disabled

**Mode**

RIP Router Configuration or RIP Router Address Family Configuration for a VRF instance.

**Example**

Use the following commands to block RIP broadcasts on vlan20:

```
awplus# configure terminal
awplus(config)# router rip
awplus(config-router)# passive-interface vlan20
```

**Example (VRF-lite)**

To apply this above example to a specific VRF instance named 'green', use the following commands:

```
awplus# configure terminal
awplus(config)# router rip
awplus(config-router)# address-family ipv4 vrf green
awplus(config-router-af)# passive-interface vlan20
```

**Related commands**

show ip rip

**Command changes**

Version 5.4.6-2.1: VRF-lite support added.

# recv-buffer-size (RIP)

**Overview** Use this command to run-time configure the RIP UDP (User Datagram Protocol) receive-buffer size to improve UDP reliability by avoiding UDP receive buffer overrun.

Use the **no** variant of this command to reset the configured RIP UDP receive-buffer size to the system default (196608 bits).

**Syntax**

```
recv-buffer-size <8192-2147483647>
no recv-buffer-size [<8192-2147483647>]
```

| Parameter | Description |
|---|---|
| *<8192-2147483647>* | Specify the RIP UDP (User Datagram Protocol) buffer size value in bits. |

**Default** 196608 bits is the system default when reset using the **no** variant of this command.

**Mode** Router Configuration

**Examples** To run-time configure the RIP UDP, use the following commands:

```
awplus# configure terminal
awplus(config)# router rip
awplus(config-router)# recv-buffer-size 23456789
awplus# configure terminal
awplus(config)# router rip
awplus(config-router)# no recv-buffer-size 23456789
```

# redistribute (RIP)

**Overview** Use this command to redistribute information from other routing protocols into RIP.

When using VRF-lite, you can apply this command to a specific VRF instance.

Use the **no** variant of this command to disable the specified redistribution. The parameters **metric** and **routemap** may be used with the **no** variant, but have no effect.

**Syntax**

```
redistribute {connected|static|ospf|bgp} [metric <0-16>]
[routemap <routemap>]
```

```
no redistribute {connected|static|ospf|bgp} [metric] [routemap]
```

| Parameter | Description |
|---|---|
| `routemap` | Optional. Specifies route-map that controls how routes are redistributed. |
| `<routemap>` | Optional. The name of the route map. |
| `connected` | Redistribute from connected routes. |
| `static` | Redistribute from static routes. |
| `ospf` | Redistribute from Open Shortest Path First (OSPF). |
| `bgp` | Redistribute from Border Gateway Protocol (BGP). |
| `metric <0-16>` | Optional. Sets the value of the metric that will be applied to routes redistributed into RIP from other protocols. If a value is not specified, and no value is specified using the default-metric (RIP) command, the default is one. |

**Default** By default, the RIP metric value is set to 1.

**Mode** RIP Router Configuration or RIP Router Address Family Configuration for a VRF instance.

**Example** To apply the metric value 15 to static routes being redistributed into RIP, use the commands:

```
awplus# configure terminal
awplus(config)# router rip
awplus(config-router)# redistribute static metric 15
```

**Example (VRF-lite)**

To apply the metric value 15 to static routes in address-family ipv4 VRF instance `blue` being redistributed into RIP, use the following commands:

```
awplus# configure terminal
awplus(config)# router rip
awplus(config-router)# address-family ipv4 vrf blue
awplus(config-router-af)# redistribute static metric 15
```

**Related commands**

default-metric (RIP)

**Command changes**

Version 5.4.6-2.1: VRF-lite support added.

# restart rip graceful

**Overview** Use this command to force the RIP process to restart, and optionally set the grace-period.

**Syntax**

```
restart rip graceful [grace-period <1-65535>]
```

**Mode** Privileged Exec

**Default** The default RIP grace-period is 60 seconds.

**Usage notes** After this command is executed, the RIP process immediately shuts down. It notifies the system that RIP has performed a graceful shutdown. Routes that have been installed into the route table by RIP are preserved until the specified grace-period expires.

When a **restart rip graceful** command is issued, the RIP configuration is reloaded from the last saved configuration. Ensure you first enter the command copy running-config startup-config.

**Example** To apply a restart rip graceful setting, grace-period to 100 seconds use the following commands:

```
awplus# copy running-config startup-config
awplus# restart rip graceful grace-period 100
```

# rip restart grace-period

**Overview** Use this command to change the grace period of RIP graceful restart.

Use the **no** variant of this command to disable this function.

**Syntax**

```
rip restart grace-period <1-65535>
no rip restart grace-period <1-65535>
```

**Mode** Global Configuration

**Default** The default RIP grace-period is 60 seconds.

**Usage notes** Use this command to enable the **Graceful Restart** feature on the RIP process. Entering this command configures a grace period for RIP.

**Example**

```
awplus# configure terminal
awplus(config)# rip restart grace-period 200
```

# route (RIP)

**Overview**

Use this command to add a static RIP route.

Use the **no** variant of this command to remove a static RIP route.

**Syntax**

```
route <ip-addr/prefix-length>
no route <ip-addr/prefix-length>
```

| Parameter | Description |
|---|---|
| *<ip-addr/prefix-length>* | The IPv4 address and prefix length. |

**Default**

No static RIP route is added by default.

**Mode**

RIP Router Configuration or RIP Router Address Family Configuration for a VRF instance.

**Usage notes**

Use this command to add a static RIP route. After adding the RIP route, the route can be checked in the RIP routing table.

**Example**

To create a static RIP route to IP subnet 192.168.1.0/24, use the following commands:

```
awplus# configure terminal
awplus(config)# router rip
awplus(config-router)# route 192.168.1.0/24
```

**Example (VRF-lite)**

To create a static RIP route to IP subnet `192.168.1.0/24`, for the VRF instance `red`, use the following commands

```
awplus# configure terminal
awplus(config)# router rip
awplus(config-router)# address-family ipv4 vrf red
awplus(config-router-af)# route 192.168.1.0/24
```

**Related commands**

show ip rip

clear ip rip route

**Command changes**

Version 5.4.6-2.1: VRF-lite support added.

# router rip

**Overview** Use this global command to enter Router Configuration mode to enable the RIP routing process.

Use the **no** variant of this command to disable the RIP routing process.

**Syntax**

```
router rip
no router rip
```

**Mode** Global Configuration

**Example** This command is used to begin the RIP routing process:

```
awplus# configure terminal
awplus(config)# router rip
awplus(config-router)# version 1
awplus(config-router)# network 10.10.10.0/24
awplus(config-router)# network 10.10.11.0/24
awplus(config-router)# neighbor 10.10.10.10
```

**Related commands** network (RIP)

version (RIP)

# send-lifetime

**Overview** Use this command to specify the time period during which the authentication key on a key chain can be sent.

**Syntax**

```
send-lifetime <start-date> {<end-date>|
duration <seconds>|infinite}
```

```
no send-lifetime
```

| Parameter | Description | |
|---|---|---|
| *<start-date>* | Specifies the start time and date in the format: *<hh:mm:ss> <day> <month> <year>* or *<hh:mm:ss> <month> <day> <year>*, where: | |
| | *<hh:mm:ss>* | The time of the day, in hours, minutes and seconds |
| | *<day>* | <1-31> The day of the month |
| | *<month>* | The month of the year (the first three letters of the month, for example, Jan) |
| | *<year>* | <1993-2035> The year |
| *<end-date>* | Specifies the end time and date in the format: *<hh:mm:ss> <day> <month> <year>* or *<hh:mm:ss> <month> <day> <year>*, where: | |
| | *<hh:mm:ss>* | The time of the day, in hours, minutes and seconds |
| | *<day>* | <1-31> The day of the month |
| | *<month>* | The month of the year (the first three letters of the month, for example, Jan) |
| | *<year>* | <1993-2035> The year |
| *<seconds>* | <1-2147483646> Duration of the key in seconds. | |
| infinite | Never expires. | |

**Mode** Keychain-key Configuration

**Example** The following example shows the setting of send-lifetime for key 1 on the key chain named “mychain”.

```
awplus# configure terminal
awplus(config)# key chain mychain
awplus(config-keychain)# key 1
awplus(config-keychain-key)# send-lifetime 03:03:01 Jan 3 2016
04:04:02 Dec 6 2016
```

**Related commands**

key

key-string

key chain

accept-lifetime

# show debugging rip

**Overview** Use this command to display the RIP debugging status for these debugging options: nsm debugging, RIP event debugging, RIP packet debugging and RIP nsm debugging.

For information on filtering and saving command output, see the "Getting_Started with AlliedWare Plus" Feature Overview and Configuration_Guide.

**Syntax**

```
show debugging rip
```

**Mode** User Exec and Privileged Exec

**Usage notes** Use this command to display the debug status of RIP.

**Example**

```
awplus# show debugging rip
```

# show ip prefix-list

**Overview** Use this command to display the IPv4 prefix-list entries.

Note that this command is valid for RIP and BGP routing protocols only.

**Syntax**

```
show ip prefix-list [<name>|detail|summary]
```

| Parameter | Description |
|---|---|
| *<name>* | Specify the name of a prefix list in this placeholder. |
| `detail` | Specify this parameter to show detailed output for all IPv4 prefix lists. |
| `summary` | Specify this parameter to show summary output for all IPv4 prefix lists. |

**Mode** User Exec and Privileged Exec

**Example**

```
awplus# show ip prefix-list
awplus# show ip prefix-list 10.10.0.98/8
awplus# show ip prefix-list detail
```

**Related commands** ip prefix-list

# show ip protocols rip

**Overview** Use this command to display RIP process parameters and statistics.

For information on filtering and saving command output, see the "Getting_Started with AlliedWare Plus" Feature Overview and Configuration_Guide.

**Syntax** `show ip protocols rip`

**Mode** User Exec and Privileged Exec

**Example** `awplus# show ip protocols rip`

**Output** Figure 27-1: Example output from the **show ip protocols rip** command

```
Routing Protocol is "rip"
Sending updates every 30 seconds with +/-50%, next due in 12
seconds
Timeout after 180 seconds, garbage collect after 120 seconds
Outgoing update filter list for all interface is not set
Incoming update filter list for all interface is not set
Default redistribution metric is 1
Redistributing: connected static
Default version control: send version 2, receive version 2
Interface        Send  Recv   Key-chain
   vlan25          2     2
Routing for Networks:
  10.10.0.0/24
Routing Information Sources:
  Gateway          BadPackets BadRoutes  Distance Last Update
Distance: (default is 120
```

# show ip rip

**Overview** Use this command to show RIP routes.

For information on filtering and saving command output, see the "Getting Started with AlliedWare Plus" Feature Overview and Configuration Guide.

**Syntax** `show ip rip`

**Mode** User Exec and Privileged Exec

**Example** `awplus# show ip rip`

**Output** Figure 27-2: Example output from the **show ip rip** command

```
awplus#show ip rip
Codes: R - RIP, Rc - RIP connected, Rs - RIP static
       C - Connected, S - Static, O - OSPF, B - BGP
Network        Next Hop Metric From If    Time
C 10.0.1.0/24             1      vlan20
S 10.10.10.0/24           1      vlan20
C 10.10.11.0/24           1      vlan20
S 192.168.101.0/24        1      vlan20
R 192.192.192.0/24        1      --
```

**Related commands**

route (RIP)

network (RIP)

clear ip rip route

show ip rip vrf interface

**Command changes** Version 5.4.6-2.1: VRF-lite support added.

# show ip rip database

**Overview** Use this command to display information about the RIP database.

For information on filtering and saving command output, see the "Getting_Started with AlliedWare Plus" Feature Overview and Configuration_Guide.

**Syntax**

```
show ip rip database [full]
```

| Parameter | Description |
|---|---|
| `full` | Specify the full RIP database including sub-optimal RIP routes. |

**Mode** User Exec and Privileged Exec

**Example**

```
awplus# show ip rip database
awplus# show ip rip database full
```

**Related commands** show ip rip

# show ip rip interface

**Overview** Use this command to display information about the RIP interfaces. You can specify an interface name to display information about a specific interface.

**Syntax** `show ip rip interface [<interface>]`

| Parameter | Description |
|---|---|
| *<interface>* | The interface to display information about. For instance: `vlan2`. |

**Mode** User Exec and Privileged Exec

**Example** `awplus# show ip rip interface`

# show ip rip vrf database

**Overview** Use this command to display information about the RIP database that is associated with a specific VRF instance.

Entering this command with the **full** option included, will display information about the full RIP database (including sub-optimal routes) associated with a specific VRF instance.

For information on filtering and saving command output, see the "Getting Started with AlliedWare Plus" Feature Overview and Configuration Guide.

**Syntax**

```
show ip rip {vrf <vrf-name>|global} database [full]
```

| Parameter | Description |
|---|---|
| `vrf` | Specific VRF instance. |
| `<vrf-name>` | The name of the VRF instance. |
| `global` | The global routing and forwarding table. |
| `full` | Specify the full RIP database including sub-optimal RIP routes. |

**Mode** User Exec and Privileged Exec

**Example** To display information about the RIP database associated with a VRF instance 'blue', use the command:

```
awplus# show ip rip vrf blue database
```

**Output** Figure 27-3: Example output from the **show ip rip vrf blue database** command

```
Codes: R - RIP, Rc - RIP connected, Rs - RIP static
       C - Connected, S - Static, O - OSPF, B - BGP

   Network            Next Hop         Metric From            If       Time
Rc 192.168.30.0/24                         1                  vlan3
R  192.168.45.0/24    192.168.30.1         2 192.168.30.1     vlan3    02:46
```

**Related commands** show ip rip

**Command changes** Version 5.4.6-2.1: VRF-lite support added.

# show ip rip vrf interface

**Overview** Use this command to display information about the RIP interfaces that are associated with a specific VRF instance.

For information on filtering and saving command output, see the "Getting Started with AlliedWare Plus" Feature Overview and Configuration Guide.

**Syntax**

```
show ip rip {vrf <vrf-name>|global} interface
[<interface-name>]
```

| Parameter | Description |
|---|---|
| `vrf` | Specific VRF instance. |
| `<vrf-name>` | The name of the VRF instance. |
| `global` | The global routing and forwarding table. |
| `<interface-name>` | The IP RIP interface (VLAN). |

**Mode** User Exec and Privileged Exec

**Example** To display information about the RIP database associated with a VRF instance 'blue', use the command:

```
awplus# show ip rip vrf blue interface
```

**Output** Figure 27-4: Example output from **show ip rip vrf blue interface vlan3**

```
Codes: R - RIP, Rc - RIP connected, Rs - RIP static
       C - Connected, S - Static, O - OSPF, B - BGP

   Network            Next Hop         Metric From            If       Time
Rc 192.168.30.0/24                           1                vlan3
R  192.168.45.0/24    192.168.30.1 2   192.168.30.1          vlan3    02:46
```

***NOTE:*** *The Time parameter operates as follows:*

- RIP updates occur approximately every 30 seconds.
- Each update resets a count-down timer to 180 seconds (3 minutes).
- The Time parameter displays the count-down from the last reset.

**Related commands** show ip rip

**Command changes** Version 5.4.6-2.1: VRF-lite support added.

# timers (RIP)

**Overview** Use this command to adjust routing network timers.

Use the **no** variant of this command to restore the defaults.

**Syntax**

```
timers basic <update> <timeout> <garbage>
no timers basic
```

| Parameter | Description |
|---|---|
| *<update>* | <5-2147483647><br>Specifies the period at which RIP route update packets are transmitted. The default is 30 seconds. |
| *<timeout>* | <5-2147483647><br>Specifies the routing information timeout timer in seconds. The default is 180 seconds. After this interval has elapsed and no updates for a route are received, the route is declared invalid. |
| *<garbage>* | <5-2147483647><br>Specifies the routing garbage collection timer in seconds. The default is 120 seconds. |

**Default** Enabled

**Mode** RIP Router Configuration or RIP Router Address Family Configuration for a VRF instance.

**Usage notes** This command adjusts the RIP timing parameters.

The update timer is the time between sending out updates, that contain the complete routing table, to every neighboring router.

If an update for a given route has not been seen for the time specified by the timeout parameter, that route is no longer valid. However, it is retained in the routing table for a short time, with metric 16, so that neighbors are notified that the route has been dropped.

When the time specified by the garbage parameter expires the metric 16 route is finally removed from the routing table. Until the garbage time expires, the route is included in all updates sent by the router.

All the routers in the network must have the same timers to ensure the smooth operation of RIP throughout the network.

**Examples** To set the update timer to 30, the routing information timeout timer to 180, and the routing garbage collection timer to 120, use the following command:

```
awplus# configure terminal
awplus(config)# router rip
awplus(config-router)# timers basic 30 180 120
```

To set the update timer to 30, the routing information timeout timer to 180, and the routing garbage collection timer to 120 with VRF, use the following command:

```
awplus# configure terminal
awplus(config)# router rip
awplus(config-router)# address-family ipv4 vrf blue
awplus(config-router-af)# timers basic 30 180 120
```

**Command changes**

Version 5.4.6-2.1: VRF-lite support added.

# undebug rip

**Overview** Use this command to disable the options set for debugging information of RIP events, packets and communication between RIP and NSM.

This command has the same effect as the **no debug rip** command.

**Syntax** `undebug rip {all|events|nsm|<packet>}`

| Parameter | Description |
|---|---|
| `all` | Disables all RIP debugging. |
| `events` | Disables the logging of RIP events. |
| `nsm` | Disables the logging of RIP and NSM communication. |
| `<packet>` | `packet [recv|send] [detail]`<br>Disables the debugging of RIP packets. |
| `recv` | Disables the logging of received packet information. |
| `send` | Disables the logging of sent packet information. |
| `detail` | Disables the logging of sent or received RIP packets. |

**Mode** Privileged Exec

**Example** To disable the options set for debugging RIP information events, use the following command:

```
awplus# undebug rip packet
```

**Related commands** debug rip

# version (RIP)

**Overview**

Use this command to specify a RIP version used globally by the router.

If VRF-lite is configured, you can specify a RIP version either globally, or for a particular VRF instance.

Use the **no** variant of this command to restore the default version.

**Syntax**

```
version {1|2}
no version
```

| Parameter | Description |
|---|---|
| 1\|2 | Specifies the version of RIP processing. |

**Default**

Version 2

**Mode**

RIP Router Configuration or RIP Router Address Family Configuration for a VRF instance.

**Usage notes**

RIP can be run in version 1 or version 2 mode. Version 2 has more features than version 1; in particular RIP version 2 supports authentication and classless routing. Once the RIP version is set, RIP packets of that version will be received and sent on all the RIP-enabled interfaces.

Setting the version command has no impact on receiving updates, only on sending them. The ip rip send version command overrides the value set by the version (RIP) command on an interface-specific basis. The ip rip receive version command allows you to configure a specific interface to accept only packets of the specified RIP version. The ip rip receive version command and the ip rip send version command override the value set by this command.

**Examples**

To specify a RIP version, use the following commands:

```
awplus# configure terminal
awplus(config)# router rip
awplus(config-router)# version 1
```

To specify a RIP version with VRF, use the following commands:

```
awplus# configure terminal
awplus(config)# router rip
awplus(config-router)# address-family ipv4 vrf blue
awplus(config-router-af)# version 1
```

**Related commands**

ip rip receive version

ip rip send version

show running-config

**Command changes** Version 5.4.6-2.1: VRF-lite support added.

# 28 RIPng for IPv6 Commands

## Introduction

**Overview** This chapter contains RIPng commands. RIPng (Routing Information Protocol next generation) is an extension of RIPv2 to support IPv6. RFC 2080 specifies RIPng. The differences between RIPv2 and RIPng are:

- RIPng does not support RIP updates authentication
- RIPng does not allow the attachment of arbitrary tags to routes
- RIPng requires the encoding of the next-hop for a set of routes

For more information, see the RIPng Feature Overview and Configuration Guide.

**Command List**


- "aggregate-address (IPv6 RIPng)" on page 997
- "clear ipv6 rip route" on page 998
- "debug ipv6 rip" on page 999
- "default-information originate (IPv6 RIPng)" on page 1000
- "default-metric (IPv6 RIPng)" on page 1001
- "distribute-list (IPv6 RIPng)" on page 1002
- "ipv6 prefix-list" on page 1003
- "ipv6 rip metric-offset" on page 1005
- "ipv6 rip split-horizon" on page 1007
- "ipv6 router rip" on page 1009
- "neighbor (IPv6 RIPng)" on page 1010
- "passive-interface (IPv6 RIPng)" on page 1011
- "recv-buffer-size (IPv6 RIPng)" on page 1012
- "redistribute (IPv6 RIPng)" on page 1013
- "route (IPv6 RIPng)" on page 1014

- "router ipv6 rip" on page 1015
- "show debugging ipv6 rip" on page 1016
- "show ipv6 prefix-list" on page 1017
- "show ipv6 protocols rip" on page 1018
- "show ipv6 rip" on page 1019
- "show ipv6 rip database" on page 1020
- "show ipv6 rip interface" on page 1021
- "timers (IPv6 RIPng)" on page 1022
- "undebug ipv6 rip" on page 1023

# aggregate-address (IPv6 RIPng)

**Overview** Use this command to add an aggregate route to RIPng.

Use the **no** variant of this command to remove the aggregate route from RIPng.

**Syntax**

```
aggregate-address <ipv6-addr/prefix-length>
no aggregate-address <ipv6-addr/prefix-length>
```

| Parameter | Description |
|---|---|
| `<ipv6-addr/prefix-length>` | Specify the IPv6 Address in the format *X:X::X:X/Prefix-Length*. The prefix-length is a decimal integer between 1 and 128. |

**Mode** Router Configuration

**Usage notes** The route will not be added to the RIPng database unless the database contains at least one route which is contained within the address range covered by the aggregate route. As soon as there are any such component routes in the RIPng database, then the following occurs:

- the aggregate route is added to the RIPng database
- all the component routes that are within the address range covered by the aggregate route are retained in the RIPng database, but are marked as suppressed routes. The aggregate route will be advertised in RIPng updates, and the component route will no longer be advertised.

Note that simply having a component route in the IPv6 route database is not a sufficient condition for the aggregate route to be included into the RIPng database. The component route(s) must be in the RIPng database before the aggregate route will be included in the RIPng database. There is no restriction on the method by which the component routes have arrived into the RIPng database, it can be by being connected RIP interfaces, by redistribution or by direct inclusion using the **route** command in router IPv6 RIP configuration mode.

**Example**

```
awplus# configure terminal
awplus(config)# router ipv6 rip
awplus(config-router)# aggregate-address 2001:db8::/32
```

# clear ipv6 rip route

**Overview** Use this command to clear specific data from the RIPng routing table.

**Syntax**

```
clear ipv6 rip route
{<ipv6-addr/prefix-length>|all|connected|rip|static|ospf}
```

| Parameter | Description |
|---|---|
| *<ipv6-addr/prefix-length>* | Specify the IPv6 Address in format *X:X::X:X/Prefix-Length*. The prefix-length is a decimal integer between 1 and 128. Removes entries which exactly match this destination address from the RIPng routing table. |
| `connected` | Removes redistributed connected entries from RIPng routing table. |
| `static` | Removes redistributed static entries from the RIPng routing table. |
| `rip` | Removes RIPng routes from the RIPng routing table. |
| `ospf` | Removes redistributed OSPFv3 routes from the RIPng routing table. |
| `all` | Clears the entire RIPng routing table. |

**Mode** Privileged Exec

**Example**

```
awplus# clear ipv6 rip route all
awplus# clear ipv6 rip route 2001:db8::/32
```

# debug ipv6 rip

**Overview** Use this command to enable RIPng debugging and specify debugging for RIPng events, RIPng packets, or RIPng communication with NSM processes.

Use the **no** variant of this command to disable RIPng debugging.

**Syntax**

```
debug ipv6 rip [all|events|nsm|packet [detail]|recv
[detail]|send [detail]]
```

```
no debug ipv6 rip [all|events|nsm|packet [detail]|recv
[detail]|send [detail]]
```

| Parameter | Description |
|---|---|
| `all` | Displays all RIPng debugging showing RIPng events debug information, RIPng received packets information, and RIPng sent packets information. |
| `events` | Displays RIPng events debug information. |
| `nsm` | Displays RIPng and NSM communication. |
| `packet` | Displays RIPng packets only. |
| `recv` | Displays information for received packets. |
| `send` | Displays information for sent packets. |
| `detail` | Displays detailed information for the sent or received packet. |

**Default** RIPng debugging is disabled by default.

**Mode** Privileged Exec and Global Configuration

**Example**

```
awplus# debug ipv6 rip events
awplus# debug ipv6 rip packet send detail
awplus# debug ipv6 rip nsm
```

**Related commands** undebug ipv6 rip

# default-information originate (IPv6 RIPng)

**Overview** Use this command to generate a default route into RIPng.

Use the **no** variant of this command to disable this feature.

**Syntax**

```
default-information originate
no default-information originate
```

**Default** Disabled

**Mode** Router Configuration

**Example**

```
awplus# configure terminal
awplus(config)# router ipv6 rip
awplus(config-router)# default-information originate
```

# default-metric (IPv6 RIPng)

**Overview** Use this command to specify the metrics to be assigned to redistributed RIPng routes.

Use the **no** variant of this command to reset the RIPng metric back to its default (1).

**Syntax**

```
default-metric <1-16>
no default-metric [<1-16>]
```

| Parameter | Description |
|---|---|
| *<1-16>* | Metric value. |

**Default** By default, the RIPng metric value is set to 1.

**Mode** Router Configuration

**Usage** This command is used with the redistribute (IPv6 RIPng) command to make the routing protocol use the specified metric value for all redistributed RIPng routes, regardless of the original protocol that the route has been redistributed from.

Note, this metric is not applied to routes that are brought into RIPng by using the **route** command in router IPv6 RIP configuration mode. This metric is, though, applied to any RIPng aggregate routes that have been brought into the RIPng database due to the presence of a component route that was redistributed into RIPng.

Also note that the default-metric is applied to routes redistributed into RIPng with no metric assignment in the routemap associated with redistribution.

**Example**

```
awplus# configure terminal
awplus(config)# router ipv6 rip
awplus(config-router)# default-metric 8
```

**Related commands** ipv6 rip metric-offset

redistribute (IPv6 RIPng)

# distribute-list (IPv6 RIPng)

**Overview** Use this command to filter incoming or outgoing route updates using the prefix-list.

Use the **no** variant of this command to disable this feature.

**Syntax**

```
distribute-list [prefix <prefix-list-name>] [in|out]
[<interface>]
```

```
no distribute-list [prefix <prefix-list-name>] [in|out]
[<interface>]
```

| Parameter | Description |
|---|---|
| *<prefix-list-name>* | Filter prefixes in routing updates.<br>Specify the name of the IPv6 prefix-list to use. |
| *<interface>* | The interface for which distribute-list applies. For instance: `vlan2`. |
| `in` | Filter incoming routing updates. |
| `out` | Filter outgoing routing updates. |

**Default** Disabled

**Mode** Router Configuration

**Usage notes** Filter out incoming or outgoing route updates using the prefix-list. If you do not specify the name of the interface, the filter is applied to all the interfaces.

**Example** To filter incoming or outgoing route updates, use the following commands:

```
awplus# configure terminal
awplus(config)# router ipv6 rip
awplus(config-router)# distribute-list prefix myfilter in vlan2
```

**Related commands** ipv6 nd prefix

# ipv6 prefix-list

**Overview** Use this command to create an IPv6 prefix list or an entry in an existing prefix list.

Use the **no** variant of this command to delete a whole prefix list, a prefix list entry, or a description.

**Syntax**

```
ipv6 prefix-list <list-name> [seq <1-429496725>] {deny|permit}
{any|<ipv6-prefix>} [ge <0-128>] [le <0-128>]
ipv6 prefix-list <list-name> description <text>
no ipv6 prefix-list <list-name> [seq <1-429496725>]
no ipv6 prefix-list <list-name> [description <text>]
```

| Parameter | Description |
|---|---|
| `<list-name>` | Specifies the name of a prefix list. |
| `seq <1-429496725>` | Sequence number of the prefix list entry. |
| `deny` | Specifies that the prefixes are excluded from the list. |
| `permit` | Specifies that the prefixes are included in the list. |
| `<ipv6-prefix>` | Specifies the IPv6 prefix and prefix length in hexadecimal in the format X:X::X:X/M. |
| `any` | Any prefix match. Same as ::0/0 le 128. |
| `ge <0-128>` | Specifies the minimum prefix length to be matched. |
| `le <0-128>` | Specifies the maximum prefix length to be matched. |
| `description` | Prefix list specific description. |
| `<text>` | Up to 80 characters of text description of the prefix list. |

**Mode** Global Configuration

**Usage notes** When the device processes a prefix list, it starts to match prefixes from the top of the prefix list, and stops whenever a permit or deny occurs. To promote efficiency, use the **seq** parameter and place common permits or denials towards the top of the list. If you do not use the **seq** parameter, the sequence values are generated in a sequence of 5.

The parameters **ge** and **le** specify the range of the prefix lengths to be matched. The parameters **ge** and **le** are only used if an ip-prefix is stated. When setting these parameters, set the **le** value to be less than 128, and the **ge** value to be less than or equal to the **le** value and greater than the ip-prefix mask length.

Prefix lists implicitly exclude prefixes that are not explicitly permitted in the prefix list. This means if a prefix that is being checked against the prefix list reaches the end of the prefix list without matching a permit or deny, this prefix will be denied.

**Example**

To check the first 32 bits of the prefix 2001:db8:: and that the subnet mask must be greater than or equal to 34 and less than or equal to 40, enter the following commands:

```
awplus# configure terminal
awplus(config)# ipv6 prefix-list mylist seq 12345 permit
2001:db8::/32 ge 34 le 40
```

**Related commands**

match ipv6 address

show ipv6 prefix-list

show running-config ipv6 prefix-list

# ipv6 rip metric-offset

**Overview**

Use this command to increment the metric value on incoming routes for a specified interface. This command can be used to artificially inflate the metric value for routes learned on the specified interface. Routes learned on the specified interface are only used if the routes to the same destination with a lower metric value in the routing table are down.

Use the **no** variant of this command to reset the metric value on incoming routes to the default value (1). You can set the metric value for redistributed routes with default-metric (IPv6 RIPng) and redistribute (IPv6 RIPng) commands in Router Configuration mode.

**Syntax**

```
ipv6 rip metric-offset <1-16>
no ipv6 rip metric-offset <1-16>
```

| Parameter | Description |
|---|---|
| *<1-16>* | Specify an increment to the metric value on an incoming route. The metric value for RIPng routes is the hop count for the route. |

**Default**

The default RIPng metric value is 1.

**Mode**

Interface Configuration for a VLAN interface or a PPP interface.

**Usage notes**

When a RIPng route is received on a VLAN interface, the metric value for the interface set by this command is added to the metric value of the route in the routing table. Note this command only increments the metric for incoming routes on a specified interface. Increasing the metric value for a VLAN interface increases the metric value of routes received on that VLAN interface. This changes the route selected from the routing table.

The RIPng metric is the hop count. At regular intervals of the routing update timer (which has a default value of 30 seconds), and at the time of change in the topology, the RIPng router sends update messages to other routers. The listening routers update their route table with the new route, and increase the metric value of the path by one (referred to as a hop count). The router recognizes the IPv6 address advertising router as the next hop, then sends the routing updates to other routers. A maximum allowable hop count is 15. If a router reaches a metric value of 16 or more, the destination is identified as unreachable.

For information about how AlliedWare Plus adds routes, see the "Route Selection" Feature Overview and Configuration Guide. See also the default-metric (IPv6 RIPng)and redistribute (IPv6 RIPng) commands to specify the metric for redistributed RIPng routes.

**Examples**

To increment the metric-offset on the VLAN interface vlan2, enter the below commands:

```
awplus# configure terminal
awplus(config)# router ipv6 rip
awplus(config-router)# exit
awplus(config)# interface vlan2
awplus(config-if)# ipv6 rip metric-offset 1
```

To reset the metric-offset on the VLAN interface `vlan2` to the default value, enter the below commands:

```
awplus# configure terminal
awplus(config)# interface vlan2
awplus(config-if)# no ipv6 rip metric-offset 1
```

To increment the metric-offset on the PPP interface `ppp0`, enter the below commands:

```
awplus# configure terminal
awplus(config)# router ipv6 rip
awplus(config-router)# exit
awplus(config)# interface ppp0
awplus(config-if)# ipv6 rip metric-offset
```

To reset the metric-offset on the PPP interface `ppp0` to the default value, enter the below commands:

```
awplus# configure terminal
awplus(config)# interface ppp0
awplus(config-if)# no ipv6 router rip
```

**Validation Commands**

show running-config

**Related commands**

default-metric (IPv6 RIPng)

# ipv6 rip split-horizon

**Overview** Use this command to perform the split-horizon action on the interface. The default is split-horizon with poisoned reverse.

Use the **no** variant of this command to disable this function.

**Syntax**

```
ipv6 rip split-horizon [poisoned]
no ipv6 rip split-horizon
```

| Parameter | Description |
|---|---|
| split-horizon | Perform split-horizon without poisoned reverse |
| poisoned | Performs split-horizon with poisoned reverse. |

**Default** Split-horizon with poisoned reverse is the default.

**Mode** Interface Configuration for a VLAN interface or a PPP interface.

**Usage notes** Use this command to avoid including routes in updates sent to the same gateway from which they were learned. Using the **split horizon** command omits routes learned from one neighbor, in updates sent to that neighbor. Using the **poisoned** parameter with this command includes such routes in updates, but sets their metrics to infinity. Thus, advertising that these routes are not reachable.

**Examples** To perform split-horizon with poisoned reverse on the VLAN interface vlan2, enter the below commands:

```
awplus# configure terminal
awplus(config)# router ipv6 rip
awplus(config-router)# exit
awplus(config)# interface vlan2
awplus(config-if)# ipv6 rip split-horizon poisoned
```

To disable split-horizon on the VLAN interface vlan2, enter the below commands:

```
awplus# configure terminal
awplus(config)# interface vlan2
awplus(config-if)# no ipv6 rip split-horizon
```

To perform split-horizon with poisoned reverse on the PPP interface ppp0, enter the below commands:

```
awplus# configure terminal
awplus(config)# router ipv6 rip
awplus(config-router)# exit
awplus(config)# interface ppp0
awplus(config-if)# ipv6 rip split-horizon poisoned
```

To disable split-horizon on the PPP interface ppp0, enter the below commands:

```
awplus# configure terminal
awplus(config)# interface ppp0
awplus(config-if)# no ipv6 router rip
```

**Validation Commands**

show running-config

# ipv6 router rip

**Overview** Use this command to enable RIPng routing on an interface.

Use the **no** variant of this command to disable RIPng routing on an interface.

**Syntax**

```
ipv6 router rip
no ipv6 router rip
```

**Default** RIPng routing is disabled by default.

**Mode** Interface Configuration for a VLAN interface or a PPP interface.

**Usage notes** This command can only be configured on VLAN interfaces.

**Examples** To enable RIPng routing on the VLAN interface vlan2, enter the below commands:

```
awplus# configure terminal
awplus(config)# router ipv6 rip
awplus(config-router)# exit
awplus(config)# interface vlan2
awplus(config-if)# ipv6 router rip
```

To disable RIPng routing on the VLAN interface vlan2, enter the below commands:

```
awplus# configure terminal
awplus(config)# interface vlan2
awplus(config-if)# no ipv6 router rip
```

To enable RIPng routing on the PPP interface ppp0, enter the below commands:

```
awplus# configure terminal
awplus(config)# router ipv6 rip
awplus(config-router)# exit
awplus(config)# interface ppp0
awplus(config-if)# ipv6 router rip
```

To disable RIPng routing on the PPP interface ppp0, enter the below commands:

```
awplus# configure terminal
awplus(config)# interface ppp0
awplus(config-if)# no ipv6 router rip
```

# neighbor (IPv6 RIPng)

**Overview** Use this command to specify a neighbor router.

Use the **no** variant of this command to disable the specific router.

**Syntax**

```
neighbor <ipv6-link-local-addr> <interface>
no neighbor <ipv6-link-local-addr> <interface>
```

| Parameter | Description |
|---|---|
| *<ipv6-link-local-addr>* | Specify the link-local IPv6 address (in the format *X:X::X:X*) of a neighboring router to exchange routing information with. |
| *<interface>* | The interface. For instance: `vlan2`. |

**Mode** Router Configuration

**Usage** Use this command to exchange non broadcast routing information. It can be used multiple times for additional neighbors.

The passive-interface (IPv6 RIPng) command disables sending routing updates on an interface. Use the `neighbor` command in conjunction with the passive-interface (IPv6 RIPng) command to send routing updates to specific neighbors.

**Examples**

```
awplus# configure terminal
awplus(config)# router ipv6 rip
awplus(config-router)# neighbor 2001:db8:1::1 vlan2
awplus# configure terminal
awplus(config)# router ipv6 rip
awplus(config-router)# no neighbor 2001:db8:1::1 vlan2
```

**Related commands** passive-interface (IPv6 RIPng)

# passive-interface (IPv6 RIPng)

**Overview** Use this command to enable suppression of routing updates on an interface.

Use the **no** variant of this command to disable this function.

**Syntax**

```
passive-interface <interface>
no passive-interface <interface>
```

| Parameter | Description |
|---|---|
| *<interface>* | The interface. For instance: `vlan2`. |

**Default** Disabled

**Mode** Router Configuration

**Examples** To enable suppression of routing updates, use the following commands:

```
awplus# configure terminal
awplus(config)# router ipv6 rip
awplus(config-router)# passive-interface vlan2
awplus# configure terminal
awplus(config)# router ipv6 rip
awplus(config-router)# no passive-interface vlan2
```

# recv-buffer-size (IPv6 RIPng)

**Overview** Use this command to configure the RIPng UDP (User Datagram Protocol) receive-buffer size. This should improve UDP reliability by avoiding UDP receive buffer overruns.

Use the **no** variant of this command to unset the configured RIPng UDP receive-buffer size and set it back to the system default of 196608 bits.

**Syntax**

```
recv-buffer-size <8192-2147483647>
no recv-buffer-size [<8192-2147483647>]
```

**Default** The RIPng UDP receive-buffer-size is 196608 bits by default, and is reset to the default using the **no** variant of this command.

**Mode** Router Configuration

**Examples** To configure the RIPng UPD, use the following commands:

```
awplus# configure terminal
awplus(config)# router ipv6 rip
awplus(config-router)# recv-buffer-size 23456789
awplus# configure terminal
awplus(config)# router ipv6 rip
awplus(config-router)# no recv-buffer-size 23456789
awplus# configure terminal
awplus(config)# router ipv6 rip
awplus(config-router)# no recv-buffer-size
```

# redistribute (IPv6 RIPng)

**Overview** Use this command to redistribute information from other routing protocols into RIPng.

Use the **no** variant of this command to disable the specified redistribution. The parameters **metric** and **routemap** may be used on this command, but have no effect.

**Syntax**

```
redistribute {connected|static|ospf} [metric <0-16>] [route-map
<route-map>]
```

```
no redistribute {connected|static|ospf} [metric <0-16>]
[route-map <route-map>]
```

| Parameter | Description |
|---|---|
| *<0-16>* | Optional. Specifies the metric value to be used when redistributing information. If a value is not specified, and no value is specified using the default-metric (IPv6 RIPng) command, the default is one. |
| *<route-map>* | Optional. Specifies route-map to be used to redistribute information. |
| `connected` | Redistribute from connected routes. |
| `static` | Redistribute from static routes. |
| `ospf` | Redistribute from Open Shortest Path First (OSPF). |

**Default** By default, the RIPng metric value is set to 1.

**Mode** Router Configuration

**Example** To redistribute information from other routing protocols into RIPng, use the following commands:

```
awplus# configure terminal
awplus(config)# router ipv6 rip
awplus(config-router)# redistribute static route-map mymap
awplus(config-router)# redistribute static metric 8
```

**Related commands** default-metric (IPv6 RIPng)

# route (IPv6 RIPng)

**Overview**

Use this command to configure static RIPng routes.

Use the **no** variant of this command to disable this function.

**Syntax**

```
route <ipv6-addr/prefix-length>
no route <ipv6-addr/prefix-length>
```

| Parameter | Description |
|---|---|
| *<ipv6-addr/prefix-length>* | Specify the IPv6 Address in format *X:X::X:X/Prefix-Length*. The prefix-length is a decimal integer between 1 and 128. |

**Mode**

Router Configuration

**Usage notes**

Use this command to add a static RIPng route. After adding the RIPng route, the route can be checked in the RIPng routing table.

**Example**

To configure static RIPng routes, use the following commands:

```
awplus# configure terminal
awplus(config)# router ipv6 rip
awplus(config-router)# route 2001:db8::1/64
```

**Related commands**

show ipv6 rip

clear ipv6 rip route

# router ipv6 rip

**Overview** Use this global command to enter Router Configuration mode to enable a RIPng routing process.

Use the **no** variant of this command to disable the RIPng routing process.

**Syntax**

```
router ipv6 rip
no router ipv6 rip
```

**Mode** Global Configuration

**Example** To enable a RIPng routing process, use the following commands:

```
awplus# configure terminal
awplus(config)# router ipv6 rip
awplus(config-router)#
```

# show debugging ipv6 rip

**Overview** Use this command to see what debugging is turned on for RIPng options such as: nsm debugging, RIPng event debugging, RIPng packet debugging, and RIPng nsm debugging.

For information on filtering and saving command output, see the "Getting_Started with AlliedWare Plus" Feature Overview and Configuration_Guide.

**Syntax**

```
show debugging ipv6 rip
```

**Mode** User Exec and Privileged Exec

**Usage notes** Use this command to display the debug status of RIPng.

**Example** To display the RIPng debugging status, use the following command:

```
awplus# show debugging ipv6 rip
```

# show ipv6 prefix-list

**Overview** Use this command to display the prefix-list entries.

Note that this command is valid for RIPng and BGP4+ routing protocols only.

**Syntax**

```
show ipv6 prefix-list [<name>|detail|summary]
```

| Parameter | Description |
|---|---|
| `<name>` | Specify the name of an individual IPv6 prefix list. |
| `detail` | Specify this parameter to show detailed output for all IPv6 prefix lists. |
| `summary` | Specify this parameter to show summary output for all IPv6 prefix lists. |

**Mode** User Exec and Privileged Exec

**Example**

```
awplus# show ipv6 prefix-list
awplus# show ipv6 prefix-list 10.10.0.98/8
awplus# show ipv6 prefix-list detail
```

**Related commands** ipv6 prefix-list

# show ipv6 protocols rip

**Overview** Use this command to display RIPng process parameters and statistics.

For information on filtering and saving command output, see the "Getting Started with AlliedWare Plus" Feature Overview and Configuration Guide.

**Syntax**

```
show ipv6 protocols rip
```

**Mode** User Exec and Privileged Exec

**Example** To display RIPng process parameters and statistics, use the following command:

```
awplus# show ipv6 protocols rip
```

**Output**

```
awplus#show ipv6 protocols rip
Routing Protocol is "RIPng"
  Sending updates every 30 seconds with +/-5 seconds, next due
in 6 seconds
  Timeout after 180 seconds, garbage collect after 120 seconds
  Outgoing update filter list for all interface is not set
  Incoming update filter list for all interface is not set
  Default redistribute metric is 1
  Redistributing:
  Interface
    vlan3
  Routing for Networks:
    fe80::200:cdff:fe27:c086 vlan1
```

# show ipv6 rip

**Overview** Use this command to show RIPng routes.

For information on filtering and saving command output, see the "Getting Started with AlliedWare Plus" Feature Overview and Configuration Guide.

**Syntax**

```
show ipv6 rip
```

**Mode** User Exec and Privileged Exec

**Example** To display RIPng routes, use the following command:

```
awplus# show ipv6 rip
```

**Output**

```
Codes: R - RIP, Rc - RIP connected, Rs - RIP static, Ra - RIP
aggregated, Rcx - RIP connect suppressed, Rsx - RIP static
suppressed, C - Connected, S - Static, O - OSPF, B - BGP

   Network           Next Hop         If     Met Tag   Time

R  2001:db8:1::/48   2001:db8:2::/48  vlan3   3   0    02:28
C  2001:db8:3::/48   ::               vlan2   1   0
Ra 2001:db8:4::/48                    --      1   0
Rs 2001:db8:5::/48   2001:db8:1::/48  vlan3   3   0    02:32
Cs 2001:db8:6::/48   ::               vlan3   1   0
```

**Related commands** show ipv6 rip database

# show ipv6 rip database

**Overview** Use this command to display information about the RIPng database.

For information on filtering and saving command output, see the "Getting Started with AlliedWare Plus" Feature Overview and Configuration Guide.

**Syntax**

```
show ipv6 rip database [full]
```

| Parameter | Description |
|---|---|
| `full` | Display all IPv6 RIPng full database entries including sub-optimal routes. |

**Mode** User Exec and Privileged Exec

**Example** To display information about the RIPng database, use the following command:

```
awplus# show ipv6 rip database
```

**Output**

```
Codes: R - RIP, Rc - RIP connected, Rs - RIP static, Ra - RIP
aggregated, Rcx - RIP connect suppressed, Rsx - RIP static
suppressed, C - Connected, S - Static, O - OSPF, B - BGP

   Network           Next Hop         If     Met Tag   Time

R  2001:db8:1::/48   2001:db8:2::/48  vlan3   3   0    02:28
C  2001:db8:3::/48   ::               vlan2   1   0
Ra 2001:db8:4::/48                    --      1   0
Rs 2001:db8:5::/48   2001:db8:1::/48  vlan3   3   0    02:32
Cs 2001:db8:6::/48   ::               vlan3   1   0
```

**Related commands** show ipv6 rip

# show ipv6 rip interface

**Overview** Use this command to display information about the RIPng interfaces. You can specify an interface name to display information about a specific interface.

For information on filtering and saving command output, see the "Getting_Started with AlliedWare Plus" Feature Overview and Configuration_Guide.

**Syntax** `show ipv6 rip interface [<interface>]`

| Parameter | Description |
|---|---|
| *<interface>* | The interface to display information about. For instance: `vlan2`. |

**Mode** User Exec and Privileged Exec

**Example** To display RIPng interface information, use the following command:

```
awplus# show ipv6 rip interface
```

**Output**

```
lo is up, line protocol is up
RIPng is not enabled on this interface
vlan1 is up, line protocol is up
RIPng is not enabled on this interface
vlan2 is down, line protocol is down
RIPng is not enabled on this interface
vlan3 is up, line protocol is up
Routing Protocol: RIPng
Passive interface: Disabled
Split horizon: Enabled with Poisoned Reversed
IP interface address:
2001:db8:1::1/64
2001:db8:1::2/64
```

# timers (IPv6 RIPng)

**Overview** Use this command to adjust the RIPng routing network timers.

Use the **no** variant of this command to restore the defaults.

**Syntax**

```
timers basic <update> <timeout> <garbage>
no timers basic
```

| Parameter | Description |
|---|---|
| *<update>* | <5-2147483647> Specifies the RIPng routing table update timer in seconds. The default is 30 seconds. |
| *<timeout>* | <5-2147483647> Specifies the RIPng routing information timeout timer in seconds. The default is 180 seconds. After this interval has elapsed and no updates for a route are received, the route is declared invalid. |
| *<garbage>* | <5-2147483647> Specifies the RIPng routing garbage collection timer in seconds. The default is 120 seconds. |

**Default** The default RIPng routing table update timer default is 30 seconds, the default RIPng routing information timeout timer is 180 seconds, and the default RIPng routing garbage collection timer is 120 seconds. The **no** variant of this command restores the default RIPng routing timers.

**Mode** Router Configuration

**Example** To adjust the RIPng routing network timers, use the following commands:

```
awplus# configure terminal
awplus(config)# router ipv6 rip
awplus(config-router)# timers basic 30 180 120
```

# undebug ipv6 rip

**Overview** Use this command to disable debugging options of RIPng events, RIPng packets, and communication between RIPng and NSM processes.

**Syntax**

```
undebug ipv6 rip [all|events|nsm|packet [recv|send][detail]]
```

| Parameter | Description |
|---|---|
| `all` | Disables all RIPng debugging. |
| `events` | Disable the display of RIPng events information. |
| `nsm` | Disable the display of RIPng and NSM communication. |
| `packet` | Disable debugging of specified RIPng packets only. |
| `recv` | Disable the display of information for received packets. |
| `send` | Disable the display of information for sent packets. |
| `detail` | Disable the display of detailed information for sent or received packets. |

**Mode** Privileged Exec and Global Configuration

**Example** To disable debugging options, use the following command:

```
awplus# undebug ipv6 rip events
awplus# undebug ipv6 rip all
awplus# undebug ipv6 rip packet send
awplus# undebug ipv6 rip packet recv detail
```

**Related commands** debug ipv6 rip

# 29 OSPF Commands

## Introduction

**Overview** This chapter provides an alphabetical reference of commands used to configure OSPF. For more information, see the OSPF Feature Overview and Configuration Guide.

**Command List**


- "area default-cost" on page 1027
- "area authentication" on page 1028
- "area filter-list" on page 1029
- "area nssa" on page 1030
- "area range" on page 1032
- "area stub" on page 1034
- "area virtual-link" on page 1035
- "auto-cost reference bandwidth" on page 1038
- "bandwidth" on page 1040
- "capability opaque" on page 1041
- "capability restart" on page 1042
- "clear ip ospf process" on page 1043
- "compatible rfc1583" on page 1044
- "debug ospf events" on page 1045
- "debug ospf ifsm" on page 1046
- "debug ospf lsa" on page 1047
- "debug ospf nfsm" on page 1048
- "debug ospf nsm" on page 1049
- "debug ospf packet" on page 1050

- "debug ospf route" on page 1051
- "default-information originate" on page 1052
- "default-metric (OSPF)" on page 1053
- "distance (OSPF)" on page 1054
- "distribute-list (OSPF)" on page 1056
- "enable db-summary-opt" on page 1058
- "host area" on page 1059
- "ip ospf authentication" on page 1060
- "ip ospf authentication-key" on page 1061
- "ip ospf cost" on page 1063
- "ip ospf database-filter" on page 1064
- "ip ospf dead-interval" on page 1065
- "ip ospf disable all" on page 1066
- "ip ospf hello-interval" on page 1067
- "ip ospf message-digest-key" on page 1068
- "ip ospf mtu" on page 1070
- "ip ospf mtu-ignore" on page 1071
- "ip ospf network" on page 1072
- "ip ospf priority" on page 1073
- "ip ospf resync-timeout" on page 1074
- "ip ospf retransmit-interval" on page 1075
- "ip ospf transmit-delay" on page 1076
- "max-concurrent-dd" on page 1077
- "maximum-area" on page 1078
- "neighbor (OSPF)" on page 1079
- "network area" on page 1080
- "ospf abr-type" on page 1082
- "ospf restart grace-period" on page 1083
- "ospf restart helper" on page 1084
- "ospf router-id" on page 1086
- "overflow database" on page 1087
- "overflow database external" on page 1088
- "passive-interface (OSPF)" on page 1089
- "redistribute (OSPF)" on page 1090
- "restart ospf graceful" on page 1092

- "router ospf" on page 1093
- "router-id" on page 1095
- "show debugging ospf" on page 1096
- "show ip ospf" on page 1097
- "show ip ospf border-routers" on page 1100
- "show ip ospf database" on page 1101
- "show ip ospf database asbr-summary" on page 1103
- "show ip ospf database external" on page 1104
- "show ip ospf database network" on page 1106
- "show ip ospf database nssa-external" on page 1107
- "show ip ospf database opaque-area" on page 1109
- "show ip ospf database opaque-as" on page 1110
- "show ip ospf database opaque-link" on page 1111
- "show ip ospf database router" on page 1112
- "show ip ospf database summary" on page 1114
- "show ip ospf interface" on page 1117
- "show ip ospf neighbor" on page 1118
- "show ip ospf route" on page 1120
- "show ip ospf virtual-links" on page 1121
- "show ip protocols ospf" on page 1122
- "summary-address" on page 1123
- "timers spf exp" on page 1124
- "undebug ospf events" on page 1125
- "undebug ospf ifsm" on page 1126
- "undebug ospf lsa" on page 1127
- "undebug ospf nfsm" on page 1128
- "undebug ospf nsm" on page 1129
- "undebug ospf packet" on page 1130
- "undebug ospf route" on page 1131

# area default-cost

**Overview** This command specifies a cost for the default summary route sent into a stub or NSSA area.

The **no** variant of this command removes the assigned default-route cost.

**Syntax**

```
area <area-id> default-cost <0-16777215>
no area <area-id> default-cost
```

| Parameter | Description | |
|---|---|---|
| *<area-id>* | The OSPF area that you are specifying the default summary route cost for. Use one of the following formats: This can be entered in either dotted decimal format or normal decimal format. | |
| | *<ip-addr>* | OSPF Area ID expressed in IPv4 address format A.B.C.D. |
| | *<0-4294967295>* | OSPF Area ID expressed as a decimal number within the range shown. |
| | For example the values dotted decimal 0.0.1.2 and decimal 258 would both define the same area ID. | |
| *default-cost* | Indicates the cost for the default summary route used for a stub or NSSA area.<br>Default: **1** | |

**Mode** Router Configuration

**Usage** The default-cost option provides the metric for the summary default route, generated by the area border router, into the NSSA or stub area. Use this option only on an area border router that is attached to the NSSA or stub area. Refer to the RFC 3101 for information on NSSA.

**Example** To set the default cost to 10 in area 1 for the OSPF instance 100, use the commands:

```
awplus# configure terminal
awplus(config)# router ospf 100
awplus(config-router)# area 1 default-cost 10
```

**Related commands**

area nssa

area stub

# area authentication

**Overview** Use this command to enable authentication for an OSPF area. Specifying the area authentication sets the authentication to Type 1 authentication or the Simple Text password authentication (details in RFC 2328).

The **no** variant of this command removes the authentication specification for an area.

**Syntax**

```
area <area-id> authentication [message-digest]
no area <area-id> authentication
```

| Parameter | Description | |
|---|---|---|
| *<area-id>* | The OSPF area that you are enabling authentication for. This can be entered in either dotted decimal format or normal decimal format. | |
| | *<ip-addr>* | OSPF Area ID expressed in IPv4 address, entered in the form A.B.C.D. |
| | *<0-4294967295>* | OSPF Area ID expressed as a decimal number within the range shown. |
| | For example the values dotted decimal 0.0.1.2 and decimal 258 would both define the same area OSPF Area ID. | |
| *message-digest* | Enables MD5 authentication in the OSPF area. | |

**Default** By default, no authentication occurs.

**Mode** Router Configuration

**Usage** All OSPF packets transmitted in this **area** must have the same password in their OSPF header. This ensures that only routers that have the correct password may join the routing domain.

Give all routers that are to communicate with each other through OSPF the same authentication password.

Use the ip ospf authentication-key command to specify a Simple Text password. Use the ip ospf message-digest-key command to specify MD5 password.

**Example**

```
awplus# configure terminal
awplus(config)# router ospf 100
awplus(config-router)# area 1 authentication
```

**Related commands** ip ospf authentication

ip ospf message-digest-key

# area filter-list

**Overview** This command configures filters to advertise summary routes on Area Border Routers (ABR).

This command is used to suppress particular intra-area routes from/to an area to/from the other areas. You can use this command in conjunction with the prefix-list command.

The **no** variant of this command removes the filter configuration.

**Syntax**

```
area <area-id> filter-list prefix <prefix-list> {in|out}
no area <area-id> filter-list prefix <prefix-list> {in|out}
```

| Parameter | Description | |
|---|---|---|
| *<area-id>* | The OSPF area that you are configuring the filter for. Use one of the following formats: This can be entered in either dotted decimal format or normal decimal format. | |
| | *<ip-addr>* | OSPF Area ID expressed in IPv4 address format A.B.C.D. |
| | *<0-4294967295>* | OSPF Area ID expressed as a decimal number within the range shown. |
| | For example the values dotted decimal 0.0.1.2 and decimal 258 would both define the same area ID. | |
| `prefix` | Use prefix-list to filter summary. | |
| *<prefix-list>* | Name of a prefix-list. | |
| `in` | Filter routes from the other areas to this area. | |
| `out` | Filter routes from this area to the other areas. | |

**Mode** Router Configuration

# area nssa

**Overview** This command sets an area as a Not-So-Stubby-Area (NSSA). By default, no NSSA area is defined.

Use this command to simplify administration if you are connecting a central site using OSPF to a remote site that is using a different routing protocol. You can extend OSPF to cover the remote connection by defining the area between the central router and the remote router as an NSSA.

There are no external routes in an OSPF stub area, so you cannot redistribute from another protocol into a stub area. A NSSA allows external routes to be flooded within the area. These routes are then leaked into other areas. Although, the external routes from other areas still do not enter the NSSA. You can either configure an area to be a stub area or an NSSA, not both.

The **no** variant of this command removes this designation.

**Syntax**

```
area <area-id> nssa [default-information-originate <metric> |
no-redistribution | no-summary | translator-role <role> ]
```

```
no area <area-id> nssa [default-information-originate |
no-redistribution | no-summary | translator-role ]
```

| Parameter | Description | |
|---|---|---|
| *<area-id>* | The OSPF area that you are configuring as an NSSA. Use one of the following formats: This can be entered in either dotted decimal format or normal decimal format. | |
| | *<ip-addr>* | OSPF Area ID expressed in IPv4 address format A.B.C.D. |
| | *<0-4294967295>* | OSPF Area ID expressed as a decimal number within the range shown. |
| | For example the values dotted decimal 0.0.1.2 and decimal 258 would both define the same area ID. | |
| `default-information-originate` | Originate Type-7 default LSA into NSSA. | |
| *<metric>* | The external or internal metric. Specify the following: | |
| | `metric`*<0-16777214>* | The metric value. |
| | `metric-type`*<1-2>* | External metric type. |
| `no-redistribution` | Do not redistribute external route into NSSA. | |
| `no-summary` | Do not inject inter-area route into NSSA. | |
| `translator-role` | Specify NSSA-ABR translator-role. | |

| Parameter | Description | |
|---|---|---|
| *<role>* | The role type. Specify one of the following keywords: | |
| | `always` | Router always translate NSSA-LSA to Type-5 LSA. |
| | `candidate` | Router may translate NSSA-LSA to Type-5 LSA if it is elected. |
| | `never` | Router never translate NSSA-LSA. |

**Mode** Router Configuration

**Example**

```
awplus# configure terminal
awplus(config)# router ospf 100
awplus(config-router)# area 0.0.0.51 nssa
awplus(config-router)# area 3 nssa translator-role candidate
no-redistribution default-information-originate metric 34
metric-type 2
```

**Related commands** area default-cost

# area range

**Overview** Use this command to summarize OSPF routes at an area boundary, configuring an IPv4 address range which consolidates OSPF routes. By default, this feature is not enabled.

A summary route created by this command is then advertised to other areas by the Area Border Routers (ABRs). In this way, routing information is condensed at area boundaries and outside the area so that routes are exchanged between areas in an efficient manner.

If the network numbers in an area are arranged into sets of contiguous routes, the ABRs can be configured to advertise a summary route that covers all the individual networks within the area that fall into the specified range.

Use the cost parameter to specify a metric that will be advertised in the summary Link State Advertisement (LSA), rather than relying on the standard method to calculate the metric for the LSA.

The **no** variant of this command disables this function and restores default behavior.

**Syntax**

```
area <area-id> range <ip-addr/prefix-length> [advertise] [cost
<0-16777215>]
area <area-id> range <ip-addr/prefix-length> not-advertise
no area <area-id> range <ip-addr/prefix-length>
```

| Parameter | Description | |
|---|---|---|
| *<area-id>* | The OSPF area that you summarizing the routes for. Use one of the following formats: This can be entered in either dotted decimal format or normal decimal format. | |
| | *<ip-addr>* | OSPF Area ID expressed in IPv4 address format A.B.C.D. |
| | *<0-4294967295>* | OSPF Area ID expressed as a decimal number within the range shown. |
| | For example the values dotted decimal 0.0.1.2 and decimal 258 would both define the same area ID. | |
| *<ip-addr/prefix-length>* | The area range prefix and length. | |
| `advertise` | Advertise this range as a summary route into other areas. | |

| Parameter | Description |
|---|---|
| `not-advertise` | Does not advertise this range. |
| `cost` | Optionally override the metric that would normally be calculated for this summary with a user-defined cost to be advertised for this summary LSA. Specify the metric to be advertised for this route in the range 0-16777215. |

**Default** The area range is not configured by default. The area range is advertised if it is configured.

**Mode** Router Configuration

**Usage notes** You can configure multiple ranges on a single area with multiple instances of this command, so OSPF summarizes addresses for different sets of IPv4 address ranges.

Ensure OSPF IPv4 routes exist in the area range for advertisement before using this command.

**Example**

```
awplus# configure terminal
awplus(config)# router ospf 100
awplus(config-router)# area 1 range 192.16.0.0/16
awplus(config-router)# area 1 range 203.18.0.0/16 cost 70
```

To remove a cost configured on an area range, re-enter the area range without the optional cost parameter. This will set the metric calculation back to the default algorithm.

```
awplus(config-router)# area 1 range 207.14.0.0/16 cost 35
awplus(config-router)# area 1 range 207.14.0.0/16
```

**Command changes** Version 5.5.0-0.1: parameter **cost** added

# area stub

**Overview** This command defines an OSPF area as a stub area. By default, no stub area is defined.

Use this command when routers in the area do not require learning about summary LSAs from other areas. You can define the area as a totally stubby area by configuring the Area Border Router of that area using the **area stub no-summary** command.

There are two stub area router configuration commands: the **area stub** and **area default-cost** commands. In all routers attached to the stub area, configure the area by using the **area stub** command. For an area border router (ABR) attached to the stub area, also use the **area default-cost** command.

The **no** variant of this command removes this definition.

**Syntax**

```
area <area-id>  stub [no-summary]
no area <area-id> stub [no-summary]
```

| Parameter | Description | |
|---|---|---|
| *<area-id>* | The OSPF area that you are configuring as a stub area. Use one of the following formats: This can be entered in either dotted decimal format or normal decimal format. For example the values dotted decimal 0.0.1.2 and decimal 258 would both define the same area ID. | |
| | *<ip-addr>* | OSPF Area ID expressed in IPv4 address in the format A.B.C.D. |
| | *<0-4294967295>* | OSPF Area ID expressed as a decimal number within the range shown. |
| | For example the values dotted decimal 0.0.1.2 and decimal 258 would both define the same area ID. | |
| `no-summary` | Stops an ABR from sending summary link advertisements into the stub area. | |

**Mode** Router Configuration

**Example**

```
awplus# configure terminal
awplus(config)# router ospf 100
awplus(config-router)# area 1 stub
```

**Related commands** area default-cost

# area virtual-link

**Overview** This command configures a link between two backbone areas that are physically separated through other non-backbone areas.

In OSPF, all non-backbone areas must be connected to a backbone area. If the connection to the backbone is lost, the virtual link repairs the connection.

The **no** variant of this command removes the virtual link.

**Syntax**

```
area <area-id> virtual-link <ip-addr> [<auth-key>|<msg-key>]
no area <area-id>  virtual-link <ip-addr>[<auth-key>|<msg-key>]
area <area-id>  virtual-link <ip-addr> authentication
[message-digest|null] [<auth-key>|<msg-key>]
no area <area-id>  virtual-link <ip-addr> authentication
[message-digest|null] [<auth-key>|<msg-key>]
area <area-id>  virtual-link <ip-addr> [authentication]
[dead-interval <1-65535>] [hello-interval <1-65535>]
[retransmit-interval <1-3600>] [transmit-delay <1-3600>]
no area <area-id>  virtual-link <ip-addr>[authentication]
[dead-interval] [hello-interval] [retransmit-interval]
[transmit-delay]
```

| Parameter | Description | |
|---|---|---|
| *<area-id>* | The area ID of the transit area that the virtual link passes through. Use one of the following formats: This can be entered in either dotted decimal format or normal decimal format. | |
| | *<ip-addr>* | OSPF Area ID expressed in IPv4 address format A.B.C.D. |
| | *<0-4294967295>* | OSPF Area ID expressed as a decimal number within the range shown. |
| | For example the values dotted decimal 0.0.1.2 and decimal 258 would both define the same area ID. | |
| *<ip-address>* | The OSPF router ID of the virtual link neighbor. | |
| *<auth-key>* | Specifies the password used for this virtual link. Use the format: **authentication-key***<pswd-short>* | |
| | *<pswd-short>* | An 8 character password. |
| *<msg-key>* | Specifies a message digest key using the MD5 encryption algorithm. Use the following format: **message-digest-key***<1-255>* md5 *<pswd-long>* | |
| | *<1-255>* | The key ID. |
| | *<pswd-long>* | Authentication password of 16 characters. |
| authentication | Enables authentication on this virtual link. | |

| Parameter | Description | |
|---|---|---|
| `message-digest` | Use message-digest authentication. | |
| `null` | Use null authentication to override password or message digest. | |
| `dead-interval` | If no packets are received from a particular neighbor for dead-interval seconds, the router considers that neighboring router as being off-line.<br>Default: 40 seconds | |
| | *<1-65535>* | The number of seconds in the interval. |
| `hello-interval` | The interval the router waits before it sends a hello packet.<br>Default: 10 seconds | |
| | *<1-65535>* | The number of seconds in the interval. |
| `retransmit-interval` | The interval the router waits before it retransmits a packet.<br>Default: 5 seconds | |
| | *<1-3600>* | The number of seconds in the interval. |
| `transmit-delay` | The interval the router waits before it transmits a packet.<br>Default: 1 seconds | |
| | *<1-3600>* | The number of seconds in the interval. |

**Mode** Router Configuration

**Usage notes** You can configure virtual links between any two backbone routers that have an interface to a common non-backbone area. The protocol treats these two routers, joined by a virtual link, as if they were connected by an unnumbered point-to-point network. To configure a virtual link, you require:

- The transit area ID, i.e. the area ID of the non backbone area that the two backbone routers are both connected to.
- The corresponding virtual link neighbor's router ID. To see the router ID use the show ip ospf command.

Configure the **hello-interval** to be the same for all routers attached to a common network. A short **hello-interval** results in the router detecting topological changes faster but also an increase in the routing traffic.

The **retransmit-interval** is the expected round-trip delay between any two routers in a network. Set the value to be greater than the expected round-trip delay to avoid needless retransmissions.

The **transmit-delay** is the time taken to transmit a link state update packet on the interface. Before transmission, the link state advertisements in the update packet, are incremented by this amount. Set the **transmit-delay** to be greater than zero. Also, take into account the transmission and propagation delays for the interface.

**Example**

```
awplus# configure terminal
awplus(config)# router ospf 100
awplus(config-router)# area 1 virtual-link 10.10.11.50 hello 5
dead 10
```

**Related commands**

area authentication

show ip ospf

show ip ospf virtual-links

# auto-cost reference bandwidth

**Overview** This command controls how OSPF calculates default metrics for the interface.

Use the **no** variant of this command to assign cost based only on the interface bandwidth.

**Syntax**

```
auto-cost reference-bandwidth <1-4294967>
no auto-cost reference-bandwidth
```

| Parameter | Description |
|---|---|
| *<1-4294967>* | The reference bandwidth in terms of Mbits per second (Mbps). |

**Default** 1000 Mbps

**Usage notes** By default, OSPF calculates the OSPF metric for an interface by dividing the reference bandwidth by the interface bandwidth. The default for the reference bandwidth is 1000 Mbps. As a result, if this default is used, there is very little difference between the metrics applied to interfaces of increasing bandwidth beyond 1000 Mbps.

The auto-cost command is used to alter this reference bandwidth in order to give a real difference between the metrics of high bandwidth links of differing bandwidths. In a network that has multiple links with high bandwidths, specify a larger reference bandwidth value to differentiate the costs on those links.

Cost is calculated by dividing the reference bandwidth (Mbps) by the layer 3 interface (Switched Virtual Interface (SVI), Loopback or Ethernet interface) bandwidth. Interface bandwidth may be altered by using the bandwidth command as the SVI does not auto detect the bandwidth based on the speed of associated switch ports.

When the reference bandwidth calculation results in a cost integer greater than 1 but contains a fractional value (value after the decimal point), the result rounds down to the nearest integer. The following example shows how the cost is calculated.

The reference bandwidth is 1000 Mbps and the interface bandwidth is 7 Mbps.

Calculation = 1000/7

Calculation result = 142.85 (integer of 142, fractional value of 0.85)

Result after rounding down to the nearest integer = 142 (Interface cost is 142)

When the reference bandwidth calculation results in a cost less than 1, it is rounded up to the nearest integer which is 1. The following example shows how the cost is calculated.

The reference bandwidth is 1000 Mbps and the interface bandwidth is 10000 Mbps.

Calculation = 1000/10000

Calculation result = 0.1

Result after rounding up to the nearest integer = 1 (Interface cost is 1)

The auto-cost reference bandwidth value should be consistent across all OSPF routers in the OSPF process.

Note that using the ip ospf cost command on a layer 3 interface will override the cost calculated by this command.

**Mode** Router Configuration

**Example**

```
awplus# configure terminal
awplus(config)# router ospf 100
awplus(config-router)# auto-cost reference-bandwidth 1000
```

**Related commands** ip ospf cost

# bandwidth

**Overview** Use this command to specify the maximum bandwidth to be used for each VLAN interface. The bandwidth value is in bits per second. OSPF uses this to calculate metrics for the VLAN interface.

The **no** variant of this command removes any applied bandwidth value and replaces it with a value equal to the lowest port speed within that VLAN.

**Syntax**

```
bandwidth <bandwidth-setting>
no bandwidth
```

| Parameter | Description |
|---|---|
| *<bandwidth-setting>* | Sets the bandwidth for the interface. Enter a value in the range 1 to 10000000000 bits per second. Note that to avoid entering many zeros, you can add k, m, or g to internally add 3, 6 or 9 zeros to the number entered. For example entering 1k is the same as entering 1000. |

**Mode** Interface Configuration for a VLAN interface.

**Example** To set the bandwidth on VLAN2 to be 1 Mbps, use the following commands:

```
awplus# configure terminal
awplus(config)# interface vlan2
awplus(config-if)# bandwidth 1000000
```

Or

```
awplus(config-if)# bandwidth 1m
```

**Related commands** show interface

# capability opaque

**Overview** This command enables opaque-LSAs. Opaque-LSAs are Type 9, 10 and 11 LSAs that deliver information used by external applications.

Use the **no** variant of this command to disable opaque-LSAs.

**Syntax**

```
capability opaque
no capability opaque
```

**Default** By default, opaque-LSAs are enabled.

**Mode** Router Configuration

**Example**

```
awplus# configure terminal
awplus(config)# router ospf 100
awplus(config-router)# no capability opaque
```

# capability restart

**Overview** This command enables OSPF Graceful Restart or restart signaling features. By default, this is enabled.

Use the **no** variant of this command to disable OSPF Graceful Restart and restart signaling features.

**Syntax**

```
capability restart [graceful|signaling]
no capability restart
```

| Parameter | Description |
|---|---|
| `graceful` | Enable graceful OSPF restart. |
| `signaling` | Enable OSPF restart signaling. |

**Default** Graceful restart

**Mode** Router Configuration

**Example**

```
awplus# configure terminal
awplus(config)# router ospf 100
awplus(config-router)# capability restart graceful
```

# clear ip ospf process

**Overview** This command clears and restarts the OSPF routing process. Specify the Process ID to clear one particular OSPF process. When no Process ID is specified, this command clears all running OSPF processes.

**Syntax**

```
clear ip ospf [<0-65535>] process
```

| Parameter | Description |
|---|---|
| *<0-65535>* | The Routing Process ID. |

**Mode** Privileged Exec

**Example**

```
awplus# clear ip ospf process
```

# compatible rfc1583

**Overview** This command changes the method used to calculate summary route to the that specified in RFC 1583. By default, OSPF uses the method specified in RFC 2328.

RFC 1583 specifies a method for calculating the metric for summary routes based on the minimum metric of the component paths available. RFC 2328 specifies a method for calculating metrics based on maximum cost.

It is possible that some ABRs in an area might conform to RFC 1583 and others support RFC 2328, which could lead to incompatibility in their interoperation. This command addresses this issue by allowing you to selectively disable compatibility with RFC 2328.

Use the **no** variant of this command to disable RFC 1583 compatibility.

**Syntax**

```
compatible rfc1583
no compatible rfc1583
```

**Mode** Router Configuration

**Example**

```
awplus# configure terminal
awplus(config)# router ospf 100
awplus(config-router)# compatible rfc1583
```

# debug ospf events

**Overview** This command enables OSPF debugging for OSPF event troubleshooting.

To enable all debugging options, specify **debug ospf event** with no additional parameters.

The **no** and **undebug** variant of this command disable OSPF debugging. Use this command without parameters to disable all the options.

**Syntax**

```
debug ospf events [abr] [asbr] [lsa] [nssa] [os] [router]
[vlink]
```

```
no debug ospf events [abr] [asbr] [lsa] [nssa] [os] [router]
[vlink]
```

| Parameter | Description |
|---|---|
| abr | Shows ABR events. |
| asbr | Shows ASBR events. |
| lsa | Shows LSA events. |
| nssa | Shows NSSA events. |
| os | Shows OS interaction events. |
| router | Shows other router events. |
| vlink | Shows virtual link events. |

**Mode** Privileged Exec and Global Configuration

**Example**

```
awplus# debug ospf events asbr lsa
```

**Related commands** terminal monitor

undebug ospf events

# debug ospf ifsm

**Overview** This command specifies debugging options for OSPF Interface Finite State Machine (IFSM) troubleshooting.

To enable all debugging options, specify **debug ospf ifsm** with no additional parameters.

The **no** and **undebug** variant of this command disable OSPF IFSM debugging. Use this command without parameters to disable all the options.

**Syntax**

```
debug ospf ifsm [status] [events] [timers]
no debug ospf ifsm [status] [events] [timers]
```

| Parameter | Description |
|---|---|
| `events` | Displays IFSM event information. |
| `status` | Displays IFSM status information. |
| `timers` | Displays IFSM timer information. |

**Mode** Privileged Exec and Global Configuration

**Example**

```
awplus# no debug ospf ifsm events status
awplus# debug ospf ifsm status
awplus# debug ospf ifsm timers
```

**Related commands**

terminal monitor

undebug ospf ifsm

# debug ospf lsa

**Overview** This command enables debugging options for OSPF Link State Advertisements (LSA) troubleshooting. This displays information related to internal operations of LSAs.

To enable all debugging options, specify **debug ospf lsa** with no additional parameters.

The **no** and **undebug** variant of this command disable OSPF LSA debugging. Use this command without parameters to disable all the options.

**Syntax**

```
debug ospf lsa [flooding] [generate] [install] [maxage]
[refresh]
```

```
no debug ospf lsa [flooding] [generate] [install] [maxage]
[refresh]
```

| Parameter | Description |
|---|---|
| `flooding` | Displays LSA flooding. |
| `generate` | Displays LSA generation. |
| `install` | Show LSA installation. |
| `maxage` | Shows maximum age of the LSA in seconds. |
| `refresh` | Displays LSA refresh. |

**Mode** Privileged Exec and Global Configuration

**Examples**

```
awplus# undebug ospf lsa refresh
```

**Output** Figure 29-1: Example output from the **debug ospf lsa** command

```
2002/05/09 14:08:11 OSPF: LSA[10.10.10.10:10.10.10.70]: instance(0x8139cd0)
created with Link State Update
2002/05/09 14:08:11 OSPF: RECV[LS-Upd]: From 10.10.10.70 via vlan5:10.10.10.50
(10.10.10.10 -> 224.0.0.5)
2002/05/09 14:12:33 OSPF: SEND[LS-Upd]: Begin send queue
2002/05/09 14:12:33 OSPF: SEND[LS-Upd]: # of LSAs 1, destination 224.0.0.5
2002/05/09 14:12:33 OSPF: SEND[LS-Upd]: End send queue
2002/05/09 14:12:33 OSPF: SEND[LS-Upd]: To 224.0.0.5 via vlan5:10.10.10.50
```

**Related commands** terminal monitor

undebug ospf lsa

# debug ospf nfsm

**Overview**

This command enables debugging options for OSPF Neighbor Finite State Machines (NFSMs).

To enable all debugging options, specify **debug ospf nfsm** with no additional parameters.

The **no** and **undebug** variant of this command disable OSPF NFSM debugging. Use this command without parameters to disable all the options.

**Syntax**

```
debug ospf nfsm [events] [status] [timers]
no debug ospf nfsm [events] [status] [timers]
```

| Parameter | Description |
|---|---|
| `events` | Displays NFSM event information. |
| `status` | Displays NSFM status information. |
| `timers` | Displays NFSM timer information. |

**Mode**

Privileged Exec and Global Configuration

**Examples**

```
awplus# debug ospf nfsm events
awplus# no debug ospf nfsm timers
awplus# undebug ospf nfsm events
```

**Related commands**

terminal monitor

undebug ospf nfsm

# debug ospf nsm

**Overview** This command enables debugging options for the OSPF Network Service Module.

To enable both debugging options, specify **debug ospf nsm** with no additional parameters.

The **no** and **undebug** variant of this command disable OSPF NSM debugging. Use this command without parameters to disable both options.

**Syntax**

```
debug ospf nsm [interface] [redistribute]
no debug ospf nsm [interface] [redistribute]
```

| Parameter | Description |
|---|---|
| `interface` | Specify NSM interface information. |
| `redistribute` | Specify NSM redistribute information. |

**Mode** Priviledged Exec and Global Configuration

**Examples**

```
awplus# debug ospf nsm interface
awplus# no debug ospf nsm redistribute
awplus# undebug ospf nsm interface
```

**Related commands** terminal monitor

undebug ospf nsm

# debug ospf packet

**Overview** This command enables debugging options for OSPF packets.

To enable all debugging options, specify **debug ospf packet** with no additional parameters.

The **no** and **undebug** variant of this command disable OSPF packet debugging. Use this command without parameters to disable all options.

**Syntax**

```
debug ospf packet [dd] [detail] [hello] [ls-ack] [ls-request]
[ls-update] [recv] [send]
```

```
no debug ospf packet [dd] [detail] [hello] [ls-ack] [ls-request]
[ls-update] [recv] [send]
```

| Parameter | Description |
|---|---|
| dd | Specifies debugging for OSPF database descriptions. |
| detail | Sets the debug option to detailed information. |
| hello | Specifies debugging for OSPF hello packets. |
| ls-ack | Specifies debugging for OSPF link state acknowledgments. |
| ls-request | Specifies debugging for OSPF link state requests. |
| ls-update | Specifies debugging for OSPF link state updates. |
| recv | Specifies the debug option set for received packets. |
| send | Specifies the debug option set for sent packets. |

**Mode** Privileged Exec and Global Configuration

**Examples**

```
awplus# debug ospf packet detail
awplus# debug ospf packet dd send detail
awplus# no debug ospf packet ls-request recv detail
awplus# undebug ospf packet ls-request recv detail
```

**Related commands**

terminal monitor

undebug ospf packet

# debug ospf route

**Overview**

This command enables debugging of route calculation. Use this command without parameters to turn on all the options.

To enable all debugging options, specify **debug ospf route** with no additional parameters.

The **no** and **undebug** variant of this command disable OSPF route debugging. Use this command without parameters to disable all options.

**Syntax**

```
debug ospf route [ase] [ia] [install] [spf]
no debug ospf route [ase] [ia] [install] [spf]
```

| Parameter | Description |
|---|---|
| `ia` | Specifies the debugging of Inter-Area route calculation. |
| `ase` | Specifies the debugging of external route calculation. |
| `install` | Specifies the debugging of route installation. |
| `spf` | Specifies the debugging of SPF calculation. |

**Mode**

Privileged Exec and Global Configuration

**Examples**

```
awplus# debug ospf route
awplus# no debug ospf route ia
awplus# debug ospf route install
awplus# undebug ospf route install
```

**Related commands**

terminal monitor

undebug ospf route

# default-information originate

**Overview** This command creates a default external route into an OSPF routing domain.

When you use the **default-information originate** command to redistribute routes into an OSPF routing domain, then the system acts like an Autonomous System Boundary Router (ASBR). By default, an ASBR does not generate a default route into the OSPF routing domain.

When using this command, also specify the **route-map** <*route-map*> option to avoid a dependency on the default network in the routing table.

The **metric-type** is an external link type associated with the default route advertised into the OSPF routing domain. The value of the external route could be either Type 1 or 2. The default is Type 2.

The **no** variant of this command disables this feature.

**Syntax**

```
default-information originate [always] [metric <metric>]
[metric-type <1-2>] [route-map <route-map>]
```

```
no default-information originate [always] [metric]
[metric-type] [route-map]
```

| Parameter | Description |
|---|---|
| `always` | Used to advertise the default route regardless of whether there is a default route. |
| *<metric>* | The metric value used in creating the default route. Enter a value in the range 0 to 16777214.<br>The default metric value is 10. The value used is specific to the protocol. |
| *<1-2>* | External metric type for default routes, either OSPF External Type 1 or Type 2 metrics. Enter the value 1 or 2. |
| `route-map` | Specifies to use a specific route-map. |
| *<route-map>* | The route-map name. It is a string comprised of any characters, numbers or symbols. |

**Mode** Router Configuration

**Example**

```
awplus# configure terminal
awplus(config)# router ospf 100
awplus(config-router)# default-information originate always
metric 23 metric-type 2 route-map myinfo
```

**Related commands** route-map

# default-metric (OSPF)

**Overview**

This command sets default metric values for the OSPF routing protocol.

The **no** variant of this command returns OSPF to using built-in, automatic metric translations, as appropriate for each routing protocol.

**Syntax**

```
default-metric <1-16777214>
no default-metric [<1-16777214>]
```

| Parameter | Description |
|---|---|
| *<1-16777214>* | Default metric value appropriate for the specified routing protocol. |

**Mode**

Router Configuration

**Usage notes**

A default metric facilitates redistributing routes even with incompatible metrics. If the metrics do not convert, the default metric provides an alternative and enables the redistribution to continue. The effect of this command is that OSPF will use the same metric value for **all** redistributed routes. Use this command in conjunction with the redistribute (OSPF) command.

**Examples**

```
awplus# configure terminal
awplus(config)# router ospf 100
awplus(config-router)# default-metric 100
awplus# configure terminal
awplus(config)# router ospf 100
awplus(config-router)# no default-metric
```

**Related commands**

redistribute (OSPF)

# distance (OSPF)

## Overview

This command sets the administrative distance for OSPF routes based on the route type. Your device uses this value to select between two or more routes to the same destination from two different routing protocols. The route with the smallest administrative distance value is added to the Forwarding Information Base (FIB). See the Route_Selection Feature Overview and Configuration Guide for more information.

Use the command **distance ospf** to set the distance for an entire category of OSPF routes, rather than the specific routes that pass an access list.

Use the command **distance <1-255>**, with no other parameter, to set the same distance for all OSPF route types.

The **no** variant of this command sets the administrative distance for all OSPF routes to the default of 110.

## Syntax

```
distance <1-255>
distance ospf {external <1-255>|inter-area <1-255>|intra-area
<1-255>}
no distance {ospf|<1-255>}
```

| Parameter | Description |
|---|---|
| *<1-255>* | Specify the Administrative Distance value for OSPF routes. |
| `external` | Sets the distance for routes from other routing domains, learned by redistribution. Specify an OSPF external distance in the range *<1-255>*. |
| `inter-area` | Sets the distance for all routes from one area to another area. Specify an OSPF inter-area distance in the range *<1-255>*. |
| `intra-area` | Sets the distance for all routes within an area. Specify an OSPF intra-area distance in the range *<1-255>*. |

## Default

The default OSPF administrative distance is 110. The default Administrative Distance for each type of route (intra, inter, or external) is 110.

## Mode

Router Configuration

## Usage notes

The administrative distance rates the trustworthiness of a routing information source. The distance could be any integer from 0 to 255. A higher distance value indicates a lower trust rating. For example, an administrative distance of 255 indicates that the routing information source cannot be trusted and should be ignored.

Use this command to set the distance for an entire group of routes, rather than a specific route that passes an access list.

## Examples

To set the following administrative distances for route types in OSPF 100:

- 20 for inter-area routes

- 10 for intra-area routes
- 40 for external routes

use the commands:

```
awplus(config)# router ospf 100
awplus(config-router)# distance ospf inter-area 20 intra-area
10 external 40
```

To set the administrative distance for all routes in OSPF 100 back to the default of 110, use the commands:

```
awplus(config)# router ospf 100
awplus(config-router)# no distance ospf
```

# distribute-list (OSPF)

## Overview

Use this command to apply filtering to the transfer of routing information between OSPF and the IP route table. You can apply filtering from OSPF to the IP route table using an **in** distribute-list.

The effect of an **in** filter is that some route information that OSPF has learned from LSA updates will not be installed into the IP route table.

The entities that are used to perform filtering are route-maps, which match on certain attributes in the routes that are being transferred.

For information about route maps, see the Routemaps Feature Overview and Configuration Guide.

The **no** variant of this command removes the configured distribute-list command entry.

## Syntax

```
distribute-list route-map <route-map-name> in
no distribute-list route-map <route-map-name> in
```

| Parameter | Description |
|---|---|
| *<route-map-name>* | The name of the route-map. |
| in | Indicates that this applies to incoming advertised routes. |

## Mode

Router Configuration

## Usage notes

The **in** distribute-lists carry out the following route filtering activities:

- The **in** distribute list is applied to the process of installing OSPF routes into the IP route table. The SPF calculations generate a set of routes calculated from the LSA database. By default, all of these routes become OSPF's candidate routes for inclusion into the IP route table.
- An **in** distribute-list can be used to control whether or not certain routes generated by the SPF calculation are included into the set of candidates for inclusion into the IP route table. Those routes that match **deny** entries in the distribute-list will not be considered for inclusion into the IP route table.

## Examples

The following example shows the installation of OSPF routes into the IP route table with route map "mymap1" applied, which will process routes that have been tagged 100:

```
awplus# configure terminal
awplus(config)# route-map mymap1 permit 10
awplus(config-route-map)# match tag 100
awplus(config-route-map)# exit
awplus(config)# router ospf 100
awplus(config-router)# distribute-list route-map mymap1 in
```

Use the following commands to configure a route-map to specifically prevent OSPF from offering 192.168.1.0/24 as a candidate for inclusion into the IP route table:

```
awplus# configure terminal
awplus(config)# ip prefix-list 100 seq 5 permit 192.168.1.0/24
awplus(config)# route-map 100 deny 10
awplus(config-route-map)# match ip address prefix-list 100
awplus(config-route-map)# exit
awplus(config)# route-map 100 permit 20
awplus(config-router)# router ospf 1
awplus(config-router)# distribute-list route-map 100 in
```

**Related commands**

match interface

redistribute (OSPF)

route-map

# enable db-summary-opt

**Overview** This command enables OSPF database summary list optimization.

The **no** variant of this command disables database summary list optimization.

**Syntax**

```
enable db-summary-opt
no enable db-summary-opt
```

**Default** The default setting is disabled.

**Mode** Router Configuration

**Usage** When this feature is enabled, the database exchange process is optimized by removing the LSA from the database summary list for the neighbor, if the LSA instance in the database summary list is the same as, or less recent than, the listed LSA in the database description packet received from the neighbor.

**Examples** To enable OSPF database summary list optimization, use the commands:

```
awplus# configure terminal
awplus(config)# router ospf
awplus(config-router)# enable db-summary-opt
```

To disable OSPF database summary list optimization, use the commands:

```
awplus# configure terminal
awplus(config)# router ospf
awplus(config-router)# no enable db-summary-opt
```

**Validation Commands** show running-config

# host area

**Overview** This command configures a stub host entry belonging to a particular area. You can use this command to advertise specific host routes in the router-LSA as stub link. Since stub host belongs to the specified router, specifying cost is optional.

The **no** variant of this command removes the host area configuration.

**Syntax**

```
host <ip-address> area <area-id> [cost <0-65535>]
no host <ip-address> area <area-id> [cost <0-65535>]
```

| Parameter | Description |
|---|---|
| *<ip-address>* | The IPv4 address of the host, in dotted decimal notation. |
| *<area-id>* | The OSPF area ID of the transit area that configuring the stub host entry for. Use one of the following formats:<br>• dotted decimal format, e.g. 0.0.1.2.<br>• normal decimal format in the range <0-4294967295>, e.g. 258. |
| `cost` *<0-65535>* | The cost for the stub host entry. |

**Default** By default, no host entry is configured.

**Mode** Router Configuration

**Example**

```
awplus# configure terminal
awplus(config)# router ospf 100
awplus(config-router)# host 172.16.10.100 area 1
awplus(config-router)# host 172.16.10.101 area 2 cost 10
```

# ip ospf authentication

**Overview**

This command sets the authentication method used when sending and receiving OSPF packets on the current VLAN interface. The default is to use no authentication. If no authentication method is specified in this command, then plain text authentication will be used.

The **no** variant of this command disables the authentication.

**Syntax**

```
ip ospf [<ip-address>] authentication [message-digest|null]
no ip ospf [<ip-address>] authentication
```

| Parameter | Description |
|---|---|
| *<ip-address>* | The IP address of the interface. |
| `message-digest` | Use the message digest authentication. |
| `null` | Use no authentication. It overrides password or message-digest authentication of the interface. |

**Mode**

Interface Configuration for a VLAN interface or a PPP interface.

**Usage notes**

Use the ip ospf authentication command to specify a Simple Text password. Use the ip ospf message-digest-key command to specify MD5 password.

**Example**

In this example, VLAN interface `vlan2` is configured to have no authentication. This will override any text or MD5 authentication configured on this interface.

```
awplus# configure terminal
awplus(config)# interface vlan2
awplus(config-if)# ip ospf authentication null
```

In this example, PPP interface `ppp0` is configured to have no authentication. This will override any text or MD5 authentication configured on this interface.

```
awplus# configure terminal
awplus(config)# interface ppp0
awplus(config-if)# ip ospf authentication null
```

**Related commands**

ip ospf authentication-key

area authentication

ip ospf message-digest-key

# ip ospf authentication-key

**Overview** This command specifies an OSPF authentication password for the neighboring routers.

The **no** variant of this command removes the OSPF authentication password.

**Syntax**

```
ip ospf [<ip-address>] authentication-key <pswd-long>
no ip ospf [<ip-address>] authentication-key
```

| Parameter | Description |
|---|---|
| *<ip-address>* | The IPv4 address of the interface, in dotted decimal notation. |
| *<pswd-long>* | Specifies the authentication password.<br>The string by the end of line will be used. |

**Default** By default, an authentication password is not specified.

**Mode** Interface Configuration for a VLAN interfaceor a PPP interface.

**Usage notes** This command creates a password (key) that is inserted into the OSPF header when AlliedWare Plus™ software originates routing protocol packets. Assign a separate password to each network for different VLAN interfaces. All neighboring routers on the same network with the same password exchange OSPF routing data.

The key can be used only when authentication is enabled for an area. Use the **area authentication** command to enable authentication.

Simple password authentication allows a password to be configured for each area. Configure the routers in the same routing domain with the same password.

**Example** In the following example, an authentication key test is created on VLAN interface `vlan2` in area 0. Note that first authentication is enabled for area 0.

```
awplus# configure terminal
awplus(config)# router ospf 100
awplus(config-router)# network 10.10.10.0/24 area 0
awplus(config-router)# area 0 authentication
awplus(config-router)# exit
awplus(config)# interface vlan2
awplus(config-if)# ip ospf 3.3.3.3 authentication-key test
```

In the following example, an authentication key test is created on PPP interface `ppp0` in area 0. Note that first authentication is enabled for area 0.

```
awplus# configure terminal
awplus(config)# router ospf 100
awplus(config-router)# network 10.10.10.0/24 area 0
awplus(config-router)# area 0 authentication
awplus(config-router)# exit
awplus(config)# interface ppp0
awplus(config-if)# ip ospf 3.3.3.3 authentication-key test
```

**Related commands**

area authentication

ip ospf authentication

# ip ospf cost

**Overview**

This command explicitly specifies the cost of the link-state metric in a router-LSA.

The **no** variant of this command resets the VLAN interface cost to the default.

**Syntax**

```
ip ospf [<ip-address>] cost <1-65535>
no ip ospf [<ip-address>] cost
```

| Parameter | Description |
|---|---|
| *<ip-address>* | The IPv4 address of the interface, in dotted decimal notation. |
| *<1-65535>* | The link-state metric. |

**Default**

By default there is no static value set and the OSPF cost is automatically calculated by using the auto-cost reference bandwidth command.

**Mode**

Interface Configuration for a VLAN interface or a PPP interface.

**Usage notes**

This command explicitly sets a user specified cost of sending packets out the interface. Using this command overrides the cost value calculated automatically with the auto-cost reference bandwidth feature.

The interface cost indicates the overhead required to send packets across a certain VLAN interface. This cost is stated in the Router-LSA's link. Typically, the cost is inversely proportional to the bandwidth of an interface. By default, the cost of a VLAN interface is calculated according to the following formula:

reference bandwidth/interface bandwidth

To set the VLAN interface cost manually, use this command.

**Example**

The following example shows setting ospf cost to 10 on VLAN interface `vlan25` for IP address 10.10.10.50

```
awplus# configure terminal
awplus(config)# interface vlan25
awplus(config-if)# ip ospf 10.10.10.50 cost 10
```

The following example shows setting ospf cost to 10 on PPP interface `ppp0` for IP address 10.10.10.50

```
awplus# configure terminal
awplus(config)# interface ppp0
awplus(config-if)# ip ospf 10.10.10.50 cost 10
```

**Related commands**

show ip ospf interface

auto-cost reference bandwidth

# ip ospf database-filter

**Overview** This command turns on the LSA database-filter for a particular VLAN interface.

The **no** variant of this command turns off the LSA database-filter.

**Syntax**

```
ip ospf [<ip-address>] database-filter all out
no ip ospf [<ip-address>] database-filter
```

| Parameter | Description |
|---|---|
| *<ip-address>* | The IPv4 address of the interface, in dotted decimal notation. |

**Default** By default, all outgoing LSAs are flooded to the interface.

**Mode** Interface Configuration for a VLAN interface or a PPP interface.

**Usage notes** OSPF floods new LSAs over all interfaces in an area, except the interface on which the LSA arrives. This redundancy ensures robust flooding. However, too much redundancy can waste bandwidth and might lead to excessive link and CPU usage in certain topologies, resulting in destabilizing the network. To avoid this, use the **ip ospf database-filter** command to block flooding of LSAs over specified interfaces.

**Example**

```
awplus# configure terminal
awplus(config)# interface vlan1
awplus(config-if# ip ospf database-filter all out
awplus# configure terminal
awplus(config)# interface ppp0
awplus(config-if# ip ospf database-filter all out
```

# ip ospf dead-interval

**Overview** This command sets the interval during which no hello packets are received and after which a neighbor is declared dead.

The dead-interval is the amount of time that OSPF waits to receive an OSPF hello packet from the neighbor before declaring the neighbor is down. This value is advertised in the router's hello packets. It must be a multiple of the hello-interval and be the same for all routers on a specific network.

The **no** variant of this command returns the interval to the default of 40 seconds. If you have configured this command specifying the IP address of the interface and want to remove the configuration, specify the IP address ( **no ip ospf**<*ip-address*> **dead-interval**).

**Syntax**

```
ip ospf [<ip-address>] dead-interval <1-65535>
no ip ospf [<ip-address>] dead-interval
```

| Parameter | Description |
|---|---|
| <*ip-address*> | The IPv4 address of the interface, in dotted decimal notation. |
| <*1-65545*> | The interval in seconds.<br>Default: 40 |

**Mode** Interface Configuration for a VLAN interface or a PPP interface.

**Example** The following example shows configuring the dead-interval to 10 seconds on the VLAN interface `vlan2`.

```
awplus# configure terminal
awplus(config)# interface vlan2
awplus(config-if)# ip ospf dead-interval 10
```

The following example shows configuring the dead-interval to 10 seconds on the PPP interface `ppp0`.

```
awplus# configure terminal
awplus(config)# interface ppp0
awplus(config-if)# ip ospf dead-interval 10
```

**Related commands**

ip ospf hello-interval

show ip ospf interface

# ip ospf disable all

**Overview** This command completely disables OSPF packet processing on a VLAN interface. It overrides the network area command and disables the processing of packets on the specific interface.

Use the **no** variant of this command to restore OSPF packet processing on a selected interface.

**Syntax**

```
ip ospf disable all
no ip ospf disable all
```

**Mode** Interface Configuration for a VLAN interface or a PPP interface.

**Example**

```
awplus# configure terminal
awplus(config)# interface vlan2
awplus(config-if)# ip ospf disable all
awplus# configure terminal
awplus(config)# interface ppp0
awplus(config-if)# ip ospf disable all
```

# ip ospf hello-interval

**Overview** This command specifies the interval between hello packets.

The hello-interval is advertised in the hello packets. Configure the same hello-interval for all routers on a specific network. A shorter hello interval ensures faster detection of topological changes, but results in more routing traffic.

The **no** variant of this command returns the interval to the default of 10 seconds.

**Syntax**

```
ip ospf [<ip-address>] hello-interval <1-65535>
no ip ospf [<ip-address>] hello-interval
```

| Parameter | Description |
|---|---|
| *<ip-address>* | The IP address of the interface, in dotted decimal notation. |
| *<1-65535>* | The interval in seconds.<br>Default: 10 |

**Default** The default interval is 10 seconds.

**Mode** Interface Configuration for a VLAN interface or a PPP interface.

**Example** The following example shows setting the hello-interval to 3 seconds on VLAN interface vlan2.

```
awplus# configure terminal
awplus(config)# interface vlan2
awplus(config-if)# ip ospf hello-interval 3
```

The following example shows setting the hello-interval to 3 seconds on the PPP interface ppp0.

```
awplus# configure terminal
awplus(config)# interface ppp0
awplus(config-if)# ip ospf hello-interval 3
```

**Related commands** ip ospf dead-interval

show ip ospf interface

# ip ospf message-digest-key

**Overview** This command registers an MD5 key for OSPF MD5 authentication.

Message Digest Authentication is a cryptographic authentication. A key (password) and key-id are configured on each router. The router uses an algorithm based on the OSPF packet, the key, and the key-id to generate a message digest that gets appended to the packet.

The **no** variant of this command removes the MD5 key.

**Syntax**

```
ip ospf [<ip-address>] message-digest-key <key-id> md5
<pswd-long>
```

```
no ip ospf [<ip-address>] message-digest-key <key-id>
```

| Parameter | Description |
|---|---|
| *<ip-address>* | The IPv4 address of the interface, in dotted decimal notation. |
| *<key-id>* | A key ID number specified as an integer between 1 and 255. |
| md5 | Use the MD5 algorithm. |
| *<pswd-long>* | The OSPF password. This is a string of 1 to 16 characters including spaces. |

**Default** By default, there is no MD5 key registered.

**Mode** Interface Configuration for a VLAN interface or a PPP interface.

**Usage notes** Use this command for uninterrupted transitions between passwords. It allows you to add a new key without having to delete the existing key. While multiple keys exist, all OSPF packets will be transmitted in duplicate; one copy of the packet will be transmitted for each of the current keys. This is helpful for administrators who want to change the OSPF password without disrupting communication. The system begins a rollover process until all the neighbors have adopted the new password. This allows neighboring routers to continue communication while the network administrator is updating them with a new password. The router will stop sending duplicate packets once it detects that all of its neighbors have adopted the new password.

Maintain only one password per interface, removing the old password whenever you add a new one. This will prevent the local system from continuing to communicate with the system that is using the old password. Removing the old password also reduces overhead during rollover. All neighboring routers on the same network must have the same password value to enable exchange of OSPF routing data.

**Examples** The following example shows OSPF authentication on the VLAN interface vlan5 when IP address has not been specified.

```
awplus# configure terminal
awplus(config)# interface vlan5
awplus(config-if)# ip ospf authentication message-digest
awplus(config-if)# ip ospf message-digest-key 1 md5 yourpass
```

The following example shows OSPF authentication on the PPP interface `ppp0` when IP address has not been specified.

```
awplus# configure terminal
awplus(config)# interface ppp0
awplus(config-if)# ip ospf authentication message-digest
awplus(config-if)# ip ospf message-digest-key 1 md5 yourpass
```

The following example shows configuring OSPF authentication on the VLAN interface vlan2 for the IP address 1.1.1.1. (If the interface has two IP addresses assigned-- 1.1.1.1 & 2.2.2.2, OSPF authentication will be enabled only for the IP address 1.1.1.1).

```
awplus# configure terminal
awplus(config)# interface vlan2
awplus(config-if)# ip ospf 1.1.1.1 authentication
message-digest
awplus(config-if)# ip ospf 1.1.1.1 message-digest-key 2 md5
yourpass
```

# ip ospf mtu

**Overview** This command sets the MTU size for OSPF. Whenever OSPF constructs packets, it uses the interface MTU size as Maximum IP packet size. This command forces OSPF to use the specified value, instead of the actual interface MTU size.

Use the **no** variant of this command to return the MTU size to the default.

**Syntax**

```
ip ospf mtu <576-65535>
no ip ospf mtu
```

**Default** By default, OSPF uses interface MTU derived from the interface.

**Mode** Interface Configuration for Eth interface, PPP interface, VLAN, or a tunnel.

**Usage notes** This command allows an administrator to configure the MTU size recognized by the OSPF protocol. It does not configure the MTU settings on the interface.

This command can be useful to ensure the OSPF neighbor relationship can fully establish via a network link, where the neighboring devices may have mismatched interface MTUs.

**Example** To change the OSPF MTU to 1446 on PPP0, use the commands:

```
awplus# configure terminal
awplus(config)# interface ppp0
awplus(config-if)# ip ospf mtu 1446
```

To change the OSPF MTU to 1446 on VLAN2, use the commands:

```
awplus# configure terminal
awplus(config)# interface vlan2
awplus(config-if)# ip ospf mtu 1446
```

# ip ospf mtu-ignore

**Overview** Use this command to configure OSPF so that OSPF does not check the MTU size during DD (Database Description) exchange.

Use the **no** variant of this command to make sure that OSPF checks the MTU size during DD exchange.

**Syntax**

```
ip ospf [<ip-address>] mtu-ignore
no ip ospf [<ip-address>] mtu-ignore
```

| Parameter | Description |
|---|---|
| *<ip-address>* | IPv4 address of the interface, in dotted decimal notation. |

**Mode** Interface Configuration for a VLAN interface or a PPP interface.

**Usage notes** By default, during the DD exchange process, OSPF checks the MTU size described in the DD packets received from the neighbor. If the MTU size does not match the interface MTU, the neighbor adjacency is not established. Using this command makes OSPF ignore this check and allows establishing of adjacency regardless of MTU size in the DD packet.

**Example**

```
awplus# configure terminal
awplus(config)# interface vlan2
awplus(config-if)# ip ospf mtu-ignore
awplus# configure terminal
awplus(config)# interface ppp0
awplus(config-if)# ip ospf mtu-ignore
```

# ip ospf network

**Overview** This command configures the OSPF network type to a type different from the default for the particular VLAN interface.

The **no** variant of this command returns the network type to the default for the particular VLAN interface.

**Syntax**

```
ip ospf network [broadcast|non-broadcast|point-to-point|
point-to-multipoint]
```

```
no ip ospf network
```

| Parameter | Description |
|---|---|
| `broadcast` | Sets the network type to broadcast. |
| `non-broadcast` | Sets the network type to NBMA. |
| `point-to-multipoint` | Sets the network type to point-to-multipoint. |
| `point-to-point` | Sets the network type to point-to-point. |

**Default** The default is the `broadcast` OSPF network type for a VLAN interface.

**Mode** Interface Configuration for a VLAN interface or a PPP interface.

**Usage notes** This command forces the interface network type to the specified type. Depending on the network type, OSPF changes the behavior of the packet transmission and the link description in LSAs.

**Example** The following example shows setting the network type to point-to-point on the VLAN interface vlan2.

```
awplus# configure terminal
awplus(config)# interface vlan2
awplus(config-if)# ip ospf network point-to-point
```

The following example shows setting the network type to point-to-point on the PPP interface ppp0.

```
awplus# configure terminal
awplus(config)# interface ppp0
awplus(config-if)# ip ospf network point-to-point
```

# ip ospf priority

**Overview** This command sets the router priority, which is a parameter used in the election of the designated router for the network.

The **no** variant of this command returns the router priority to the default of 1.

**Syntax**

```
ip ospf [<ip-address>] priority <priority>
no ip ospf [<ip-address>] priority
```

| Parameter | Description |
|---|---|
| *<ip-address>* | The IP address of the interface. |
| *<priority>* | *<0-255>* Specifies the Router Priority of the interface. |

**Default** The router priority for an interface is set to 1 by default.

**Mode** Interface Configuration for a VLAN interface or a PPP interface.

**Usage notes** Set the priority to help determine the OSPF Designated Router (DR) for a network. If two routers attempt to become the DR, the router with the higher router priority becomes the DR. If the router priority is the same for two routers, the router with the higher router ID takes precedence.

Only routers with nonzero router priority values are eligible to become the designated or backup designated router.

Configure router priority for multi-access networks only and not for point-to-point networks.

**Example** The following example shows setting the OSPF priority value to 3 on the VLAN interface `vlan2`.

```
awplus# configure terminal
awplus(config)# interface vlan2
awplus(config-if)# ip ospf priority 3
```

The following example shows setting the OSPF priority value to 3 on the PPP interface `ppp0`.

```
awplus# configure terminal
awplus(config)# interface ppp0
awplus(config-if)# ip ospf priority 3
```

**Related commands** ip ospf network

# ip ospf resync-timeout

**Overview** Use this command to set the interval after which adjacency is reset if out-of-band resynchronization has not occurred. The interval period starts from the time a restart signal is received from a neighbor.

Use the **no** variant of this command to return to the default.

**Syntax**

```
ip ospf [<ip-address>] resync-timeout <1-65535>
no ip ospf [<ip-address>] resync-timeout
```

| Parameter | Description |
|---|---|
| *<ip-address>* | The IP address of the interface. |
| *<1-65535>* | Specifies the resynchronization timeout value of the interface in seconds. |

**Mode** Interface Configuration for a VLAN interface or a PPP interface.

**Example** The following example shows setting the OSPF resynchronization timeout value to 65 seconds on the VLAN interface `vlan2`.

```
awplus# configure terminal
awplus(config)# interface vlan2
awplus(config-if)# ip ospf resync-timeout 65
```

The following example shows setting the OSPF resynchronization timeout value to 65 seconds on the PPP interface `ppp0`.

```
awplus# configure terminal
awplus(config)# interface ppp0
awplus(config-if)# ip ospf resync-timeout 65
```

# ip ospf retransmit-interval

**Overview** Use this command to specify the time between link-state advertisement (LSA) retransmissions for adjacencies belonging to the interface.

Use the **no** variant of this command to return to the default of 5 seconds.

**Syntax**

```
ip ospf [<ip-address>] retransmit-interval <1-65535>
no ip ospf [<ip-address>] retransmit-interval
```

| Parameter | Description |
|---|---|
| *<ip-address>* | The IP address of the interface. |
| *<1-65535>* | Specifies the interval in seconds. |

**Default** The default interval is 5 seconds.

**Mode** Interface Configuration for a VLAN interface or a PPP interface.

**Usage notes** After sending an LSA to a neighbor, the router keeps the LSA until it receives an acknowledgment. In case the router does not receive an acknowledgment during the set time (the retransmit interval value) it retransmits the LSA. Set the retransmission interval value conservatively to avoid needless retransmission. The interval should be greater than the expected round-trip delay between two routers.

**Example** The following example shows setting the `ospf retransmit interval` to 6 seconds on the VLAN interface `vlan2`.

```
awplus# configure terminal
awplus(config)# interface vlan2
awplus(config-if)# ip ospf retransmit-interval 6
```

The following example shows setting the `ospf retransmit interval` to 6 seconds on the PPP interface `ppp0`.

```
awplus# configure terminal
awplus(config)# interface ppp0
awplus(config-if)# ip ospf retransmit-interval 6
```

# ip ospf transmit-delay

**Overview** Use this command to set the estimated time it takes to transmit a link-state-update packet on the VLAN interface.

Use the **no** variant of this command to return to the default of 1 second.

**Syntax**

```
ip ospf [<ip-address>] transmit-delay <1-65535>
no ip ospf [<ip-address>] transmit-delay
```

| Parameter | Description |
|---|---|
| *<ip-address>* | The IP address of the VLAN interface. |
| *<1-65535>* | Specifies the time, in seconds, to transmit a link-state update. |

**Default** The default interval is 1 second.

**Mode** Interface Configuration for a VLAN interface or a PPP interface.

**Usage notes** The transmit delay value adds a specified time to the age field of an update. If the delay is not added, the time in which the LSA transmits over the link is not considered. This command is especially useful for low speed links. Add transmission and propagation delays when setting the transmit delay value.

**Example** The following example shows setting the OSPF transmit delay time to 3 seconds on the VLAN interface `vlan2`.

```
awplus# configure terminal
awplus(config)# interface vlan2
awplus(config-if)# ip ospf transmit-delay 3
```

The following example shows setting the OSPF transmit delay time to 3 seconds on the PPP interface `ppp0`.

```
awplus# configure terminal
awplus(config)# interface ppp0
awplus(config-if)# ip ospf transmit-delay 3
```

# max-concurrent-dd

**Overview** Use this command to set the limit for the number of Database Descriptors (DD) that can be processed concurrently.

Use the **no** variant of this command to reset the limit for the number of Database Descriptors (DD) that can be processed concurrently.

**Syntax**

```
max-concurrent-dd <1-65535>
no max-concurrent-dd
```

| Parameter | Description |
|---|---|
| *<1-65535>* | Specify the number of DD processes. |

**Mode** Router Configuration

**Usage** This command is useful when a router's performance is affected from simultaneously bringing up several OSPF adjacencies. This command limits the maximum number of DD exchanges that can occur concurrently per OSPF instance, thus allowing for all of the adjacencies to come up.

**Example** The following example sets the max-concurrent-dd value to 4, so that only 4 DD exchanges will be processed at a time.

```
awplus# configure terminal
awplus(config)# router ospf 100
awplus(config-router# max-concurrent-dd 4
```

# maximum-area

**Overview** Use this command to set the maximum number of OSPF areas.

Use the **no** variant of this command to set the maximum number of OSPF areas to the default.

**Syntax**

```
maximum-area <1-4294967294>
no maximum-area
```

| Parameter | Description |
|---|---|
| *<1-4294967294>* | Specify the maximum number of OSPF areas. |

**Default** The default for the maximum number of OSPF areas is 4294967294.

**Mode** Router Configuration

**Usage notes** Use this command in router OSPF mode to specify the maximum number of OSPF areas.

**Examples** The following example sets the maximum number of OSPF areas to 2:

```
awplus# configure terminal
awplus(config)# router ospf 100
awplus(config-router)# maximum-area 2
```

The following example removes the maximum number of OSPF areas and resets to default:

```
awplus# configure terminal
awplus(config)# router ospf 100
awplus(config-router)# no maximum-area
```

# neighbor (OSPF)

**Overview** Use this command to inform the router of other neighboring routers that are connected to the same NBMA network.

Use the **no** variant of this command to remove a configuration.

**Syntax**

```
neighbor <ip-address> [<cost>]{<priority>|<poll-interval>}
no neighbor <ip-address> [<cost>]{<priority>|<poll-interval>}
```

| Parameter | Description |
|---|---|
| `<ip-address>` | Specifies the interface IP address of the neighbor. |
| `<priority>` | *priority <0-255>*<br>Specifies the router priority value of the non-broadcast neighbor associated with the specified IP address. The default is 0. This keyword does not apply to point-to-multipoint interfaces. |
| `<poll-interval>` | *poll-interval <1-2147483647>*<br>Dead neighbor polling interval in seconds. It is recommended to set this value much higher than the hello interval. The default is 120 seconds. |
| `<cost>` | *cost <1-65535>*<br>Specifies the link-state metric to this neighbor. |

**Mode** Router Configuration

**Usage** To configure a neighbor on an NBMA network manually, use the `neighbor` command and include one neighbor entry for each known nonbroadcast network neighbor. The IP address used in this command is the neighbor's primary IP address on the interface where that neighbor connects to the NBMA network.

The poll interval is the reduced rate at which routers continue to send hello packets, when a neighboring router has become inactive. Set the poll interval to be much larger than hello interval.

**Examples** This example shows a neighbor configured with a priority value, poll interval time, and cost.

```
awplus# configure terminal
awplus(config)# router ospf 100
awplus(config-router)# neighbor 1.2.3.4 priority 1
poll-interval 90
awplus(config-router)# neighbor 1.2.3.4 cost 15
```

# network area

**Overview** Use this command to enable OSPF routing with a specified Area ID on any interfaces with IP addresses that match the specified network address.

Use the **no** variant of this command to disable OSPF routing on the interfaces.

**Syntax**

```
network <network-address> area <area-id>
no network <network-address> area <area-id>
```

| Parameter | | Description |
|---|---|---|
| *<network-address>* | | {*<ip-network/m>*\|*<ip-addr> <reverse-mask>*} |
| | *<ip-network/m>* | IP address of the network, entered in the form A.B.C.D/M.<br>Dotted decimal notation followed by a forward slash, and then the subnet mask length. |
| | *<ip-addr> <reverse-mask>* | IPv4 network address, entered in the form A.B.C.D, followed by the mask. Enter the mask as a wildcard, or reverse, mask (e.g. 0.0.0.255). Note that the device displays the mask as a subnet mask in the running configuration. |
| *<area-id>* | | {*<ip-addr>*\|*<0-4294967295>*} |
| | *<ip-addr>* | OSPF Area ID in IPv4 address format, in the form A.B.C.D. |
| | *<0-4294967295>* | OSPF Area ID as 4 octets unsigned integer value. |

**Default** No **network area** is configured by default.

**Mode** Router Configuration

**Usage notes** OSPF routing can be enabled per IPv4 subnet. The network address can be defined using either the prefix length or a wild card mask. A wild card mask is comprised of consecutive `0`'s as network bits and consecutive `1`'s as host bits.

**Examples** The following commands show the use of the **network area** command with OSPF multiple instance support disabled:

```
awplus# configure terminal
awplus(config)# router ospf 100
awplus(config-router)# network 10.0.0.0/8 area 3
awplus(config-router)# network 10.0.0.0/8 area 1.1.1.1
```

The following commands disable OSPF routing with Area ID 3 on all interfaces:

```
awplus# configure terminal
awplus(config)# router ospf 100
awplus(config-router)# no network 10.0.0.0/8 area3
```

# ospf abr-type

**Overview** Use this command to set an OSPF Area Border Router (ABR) type.

Use the **no** variant of this command to revert the ABR type to the default setting (Cisco).

**Syntax**

```
ospf abr-type {cisco|ibm|standard}
no ospf abr-type {cisco|ibm|standard}
```

| Parameter | Description |
|---|---|
| `cisco` | Specifies an alternative ABR using Cisco implementation (RFC 3509). This is the default ABR type. |
| `ibm` | Specifies an alternative ABR using IBM implementation (RFC 3509). |
| `standard` | Specifies a standard behavior ABR (RFC 2328). |

**Default** ABR type `Cisco`

**Mode** Router Configuration

**Usage** Specifying the ABR type allows better interoperation between different implementations. This command is specially useful in a multi-vendor environment. The different ABR types are:

- Cisco ABR Type: By this definition, a router is considered an ABR if it has more than one area actively attached and one of them is the backbone area.
- IBM ABR Type: By this definition, a router is considered an ABR if it has more than one area actively attached and the backbone area is configured. In this case the configured backbone need not be actively connected.
- Standard ABR Type: By this definition, a router is considered an ABR if it has more than one area actively attached to it.

**Example**

```
awplus# configure terminal
awplus(config)# router ospf 100
awplus(config-router)# ospf abr-type ibm
```

# ospf restart grace-period

**Overview** Use this command to configure the grace-period for restarting OSPF routing.

Use the **no** variant of this command to revert to the default grace-period.

**Syntax**

```
ospf restart grace-period <1-1800>
no ospf restart grace-period
```

| Parameter | Description |
|---|---|
| *<1-1800>* | Specifies the grace period in seconds. |

**Default** In the AlliedWare Plus™ OSPF implementation, the default OSPF grace-period is 180 seconds.

**Mode** Global Configuration

**Usage notes** Use this command to enable the OSPF Graceful Restart feature and set the restart grace-period. Changes from the default restart grace-period are displayed in the running- config. The restart grace-period is not displayed in the running-config if it has been reset to the default using the **no** variant of this command.

**Example** To set the OSPF restart grace-period to 250 seconds, use the commands:

```
awplus# configure terminal
awplus(config)# ospf restart grace-period 250
```

To reset the OSPF restart grace-period to the default (180 seconds), use the commands:

```
awplus# configure terminal
awplus(config)# no ospf restart grace-period
```

**Validation Commands** show running-config

**Related commands** ospf restart helper

restart ospf graceful

# ospf restart helper

**Overview** Use this command to configure the **helper** behavior for the OSPF Graceful Restart feature.

Use the **no** variant of this command to revert to the default grace-period.

**Syntax**

```
ospf restart helper {max-grace-period
<grace-period>|only-reload|only-upgrade}
ospf restart helper {never router-id <router-id>}
no ospf restart helper [max-grace-period]
```

| Parameter | Description |
|---|---|
| `max-grace-period` | Specify help if received grace-period is less than a specified value. |
| *<grace-period>* | Maximum grace period accepted in seconds in range *<1-1800>*. |
| `never` | Specify the local policy to never to act as a helper for this feature. |
| `only-reload` | Specify help only on software reloads not software upgrades. |
| `only-upgrade` | Specify help only on software upgrades not software reloads. |
| `router-id` | Enter the router-id keyword to specify the OSPF Router ID that is never to act as a helper for the OSPF Graceful Restart feature. |
| *<router-id>* | *<A.B.C.D>*<br>Specify the OSPF Router ID in dotted decimal format A.B.C.D |

**Default** In the AlliedWare Plus™ OSPF implementation, the default OSPF grace-period is 180 seconds.

**Mode** Global Configuration

**Usage** The **ospf restart helper** command requires at least one parameter, but you may use more than one in the same command (excluding parameter **never**).

The **no** version of this command turns off the OSPF restart helper, while the **no ospf restart helper max-grace-period** command resets the max-grace-period, rather than the helper policy itself.

**Example**

```
awplus# configure terminal
awplus(config)# ospf restart helper only-reload
awplus# configure terminal
awplus(config)# ospf restart helper never router-id 10.10.10.1
awplus# configure terminal
awplus(config)# no ospf restart helper max-grace-period
```

**Related commands**

ospf restart grace-period

restart ospf graceful

# ospf router-id

**Overview** Use this command to specify a router ID for the OSPF process.

Use the **no** variant of this command to disable this function.

**Syntax**

```
ospf router-id <ip-address>
no ospf router-id
```

| Parameter | Description |
|---|---|
| *<ip-address>* | Specifies the router ID in IPv4 address format. |

**Mode** Router Configuration

**Usage** Configure each router with a unique router-id. In an OSPF router process that has active neighbors, a new router-id takes effect at the next reload or when you restart OSPF manually.

**Example** The following example shows a specified router ID 2.3.4.5.

```
awplus# configure terminal
awplus(config)# router ospf 100
awplus(config-router)# ospf router-id 2.3.4.5
```

**Related commands** show ip ospf

# overflow database

**Overview** Use this command to limit the maximum number of Link State Advertisements (LSAs) that can be supported by the current OSPF instance.

Use the **no** variant of this command to have no limit on the maximum number of LSAs.

**Syntax**

```
overflow database <0-4294967294> {hard|soft}
no overflow database
```

| Parameter | Description |
|---|---|
| *<0-4294967294>* | The maximum number of LSAs. |
| `hard` | Shutdown occurs if the number of LSAs exceeds the specified value. |
| `soft` | Warning message appears if the number of LSAs exceeds the specified value. |

**Mode** Router Configuration

**Usage** Use **hard** with this command if a shutdown is required if the number of LSAs exceeds the specified number. Use **soft** with this command if a shutdown is not required, but a warning message is required, if the number of LSAs exceeds the specified number.

**Example** The following example shows setting the database overflow to 500, and a shutdown to occur, if the number of LSAs exceeds 500.

```
awplus# configure terminal
awplus(config)# router ospf 100
awplus(config-router)# overflow database 500 hard
```

# overflow database external

**Overview** Use this command to configure the size of the external database and the time the router waits before it tries to exit the overflow state.

Use the **no** variant of this command to revert to default.

**Syntax**

```
overflow database external <max-lsas> <recover-time>
no overflow database external
```

| Parameter | Description |
|---|---|
| *<max-lsas>* | *<0-2147483647>* The maximum number of Link State Advertisements (LSAs). Note that this value should be the same on all routers in the AS. |
| *<recover-time>* | *<0-65535>* the number of seconds the router waits before trying to exit the database overflow state. If this parameter is 0, router exits the overflow state only after an explicit administrator command. |

**Mode** Router Configuration

**Usage** Use this command to limit the number of AS-external-LSAs a router can receive, once it is in the wait state. It takes the number of seconds specified as the *<recover-time>* to recover from this state.

**Example** The following example shows setting the maximum number of LSAs to 5 and the time to recover from overflow state to be 3:

```
awplus# configure terminal
awplus(config)# router ospf 100
awplus(config-router)# overflow database external 50 3
```

# passive-interface (OSPF)

**Overview** Use this command to suppress the sending of Hello packets on all interfaces, or on a specified interface. If you use the **passive-interface** command without the optional parameters then **all** interfaces are put into passive mode.

Use the **no** variant of this command to allow the sending of Hello packets on all interfaces, or on the specified interface. If you use the **no** variant of this command without the optional parameters then **all** interfaces are removed from passive mode.

**Syntax**

```
passive-interface [<interface>][<ip-address>]
no passive-interface [<interface>][<ip-address>]
```

| Parameter | Description |
|---|---|
| *<interface>* | The name of the interface. |
| *<ip-address>* | IP address of the interface, entered in the form A.B.C.D. |

**Mode** Router Configuration

**Usage notes** Configure an interface to be passive if you wish its connected route to be treated as an OSPF route (rather than an AS-external route), but do not wish to actually exchange any OSPF packets via this interface.

**Examples** To configure passive interface mode on **all** interfaces, enter the following commands:

```
awplus(config)# router ospf 100
awplus(config-router)# passive-interface
```

To remove passive interface mode on interface vlan2, enter the following commands:

```
awplus(config)# router ospf 100
awplus(config-router)# no passive-interface vlan2
```

To remove passive interface mode on **all** interfaces, enter the following commands:

```
awplus(config)# router ospf 100
awplus(config-router)# no passive-interface
```

# redistribute (OSPF)

## Overview

Use this command to redistribute routes from other routing protocols, static routes and connected routes into an OSPF routing table.

Use the **no** variant of this command to disable this function.

## Syntax

```
redistribute {bgp|connected|rip|static} {metric
<0-16777214>|metric-type {1|2}|route-map <name>|tag
<0-4294967295>}
```

```
no redistribute {bgp|connected|rip|static} {metric
<0-16777214>|metric-type {1|2}|route-map <name>|tag
<0-4294967295>}
```

| Parameter | Description |
|---|---|
| `bgp` | Specifies that this applies to the redistribution of BGP routes. |
| `connected` | Specifies that this applies to the redistribution of connected routes. |
| `rip` | Specifies that this applies to the redistribution of RIP routes. |
| `static` | Specifies that this applies to the redistribution of static routes. |
| `metric` | Specifies the external metric. |
| `metric-type` | Specifies the external metric-type. |
| `route-map` | Specifies name of the route-map. |
| `tag` | Specifies the external route tag. |

## Default

The default metric value for routes redistributed into OSPF is 20. The metric can also be defined using the set metric command for a route map. Note that a metric defined using the set metric command for a route map overrides a metric defined with this command.

## Mode

Router Configuration

## Usage notes

You use this command to inject routes, learned from other routing protocols, into the OSPF domain to generate AS-external-LSAs. If a route-map is configured by this command, then that route-map is used to control which routes are redistributed and can set metric and tag values on particular routes.

The metric, metric-type, and tag values specified on this command are applied to any redistributed routes that are not explicitly given a different metric, metric-type, or tag value by the route map.

See the OSPF Feature Overview and Configuration Guide for more information about metrics, and about behavior when configured in route maps.

Note that this command does not redistribute the default route. To redistribute the default route, use the default-information originate command.

**Example**

The following example shows redistribution of BGP routes into OSPF routing table 100, with metric 12.

```
awplus# configure terminal
awplus(config)# router ospf 100
awplus(config-router)# redistribute bgp metric 12
```

The following example shows the configuration of a route-map named `rmap2`, which is then applied using the **redistribute route-map** command, so routes learned via interface vlan1 can be redistributed as type-1 external LSAs:

```
awplus# configure terminal
awplus(config)# route-map rmap2 permit 3
awplus(config-route-map)# match interface vlan1
awplus(config-route-map)# set metric-type 1
awplus(config-route-map)# exit
awplus(config)# router ospf 100
awplus(config-router)# redistributebgp rip route-map rmap2
```

Note that configuring a route-map and applying it with the **redistribute route-map** command allows you to filter which routes are distributed from another routing protocol (such as RIP). A route-map can also set the metric, tag, and metric-type of the redistributed routes.

**Related commands**

match interface

route-map

show ip ospf database external

# restart ospf graceful

**Overview** Use this command to force the OSPF process to restart, and optionally set the grace-period.

**Syntax**

```
restart ospf graceful [grace-period <1-1800>]
```

| Parameter | Description |
|---|---|
| `grace-period` | Specify the grace period. |
| *<1-1800>* | The grace period in seconds. |

**Default** In the AlliedWare Plus™ OSPF implementation, the default OSPF grace-period is 180 seconds.

**Mode** Privileged Exec

**Usage notes** After this command is executed, the OSPF process immediately shuts down. It notifies the system that OSPF has performed a graceful shutdown. Routes installed by OSPF are preserved until the grace-period expires.

When a **restart ospf graceful** command is issued, the OSPF configuration is reloaded from the last saved configuration. Ensure you first enter the command copy running-config startup-config.

**Example**

```
awplus# copy running-config startup-config
awplus# restart ospf graceful grace-period 200
```

**Related commands** ospf restart grace-period

ospf restart helper

# router ospf

**Overview** Use this command to enter Router Configuration mode to configure an OSPF routing process. You must specify the process ID with this command for multiple OSPF routing processes on the device.

Use the **no** variant of this command to terminate an OSPF routing process.

Use the **no** parameter with the **process-id** parameter, to terminate and delete a specific OSPF routing process. If no **process-id** is specified on the **no** variant of this command, then all OSPF routing processes are terminated, and all OSPF configuration is removed.

**Syntax**

```
router ospf [<process-id>]
no router ospf [<process-id>]
```

**Syntax (VRF-lite)**

```
router ospf [<process-id>] [<vrf-instance>]
no router ospf [<process-id>]
```

| Parameter | Description |
|---|---|
| *<process-id>* | A positive number from 1 to 65535, that is used to define a routing process. |
| *<vrf-instance>* | The VRF instance to be associated with the OSPF routing process. |

**Default** No routing process is defined by default.

**Mode** Global Configuration

**Usage notes** The process ID of OSPF is an optional parameter for the **no** variant of this command only. When removing all instances of OSPF, you do not need to specify each Process ID, but when removing particular instances of OSPF you must specify each Process ID to be removed.

When using VRF-lite, this command can be used to associate a process-id with a VRF instance that has been created using the ip vrf command.

**Example** To enter Router Configuration mode to configure an existing OSPF routing process `100`, use the commands:

```
awplus# configure terminal
awplus(config)# router ospf 100
awplus(config-router)#
```

**Example (VRF-lite)**

To enter Router Configuration mode to configure an existing OSPF routing process `100` for VRF instance `red`, use the commands:

```
awplus# configure terminal
awplus(config)# router ospf 100 red
awplus(config-router)#
```

**Command changes**

Version 5.4.6-2.1: VRF-lite support added.

# router-id

**Overview** Use this command to specify a router ID for the OSPF process.

Use the **no** variant of this command to force OSPF to use the previous OSPF router-id behavior.

**Syntax**

```
router-id <ip-address>
no router-id
```

| Parameter | Description |
|---|---|
| *<ip-address>* | Specifies the router ID in IPv4 address format. |

**Mode** Router Configuration

**Usage** Configure each router with a unique router-id. In an OSPF router process that has active neighbors, a new router-id is used at the next reload or when you restart OSPF manually.

**Example** The following example shows a fixed router ID 10.10.10.60

```
awplus# configure terminal
awplus(config)# router ospf 100
awplus(config-router)# router-id 10.10.10.60
```

**Related commands** show ip ospf

# show debugging ospf

**Overview** Use this command to see what debugging is turned on for OSPF.

For information on filtering and saving command output, see the "Getting_Started with AlliedWare Plus" Feature Overview and Configuration_Guide.

**Syntax**

```
show debugging ospf
```

**Mode** User Exec and Privileged Exec

**Example**

```
awplus# show debugging ospf
```

**Output** Figure 29-2: Example output from the **show debugging ospf** command

```
OSPF debugging status:
  OSPF packet Link State Update debugging is on
  OSPF all events debugging is on
```

# show ip ospf

**Overview** Use this command to display general information about all OSPF routing processes. Include the process ID parameter with this command to display information about specified instances.

For information on filtering and saving command output, see the "Getting Started with AlliedWare Plus" Feature Overview and Configuration Guide.

**Syntax**

```
show ip ospf
show ip ospf <process-id>
```

| Parameter | Description |
|---|---|
| *<process-id>* | *<0-65535>* The ID of the router process for which information will be displayed. If this parameter is included, only the information for the specified routing process is displayed. |

**Mode** User Exec and Privileged Exec

**Examples** To display general information about all OSPF routing processes, use the command:

```
awplus# show ip ospf
```

To display general information about OSPF routing process 100, use the command:

```
awplus# show ip ospf 100
```

**Table 1:** Example output from the **show ip ospf** command

```
Route Licence: Route : Limit=0, Allocated=0, Visible=0, Internal=0
Route Licence: Breach: Current=0, Watermark=0
Routing Process "ospf 10" with ID 192.168.1.1
Process uptime is 10 hours 24 minutes
Process bound to VRF default
Conforms to RFC2328, and RFC1583 Compatibility flag is disabled
Supports only single TOS(TOS0) routes
Supports opaque LSA
Supports Graceful Restart
SPF schedule delay min 0.500 secs, SPF schedule delay max 50.0 secs
Refresh timer 10 secs
Number of incomming current DD exchange neighbors 0/5
Number of outgoing current DD exchange neighbors 0/5
Number of external LSA 0. Checksum 0x000000
Number of opaque AS LSA 0. Checksum 0x000000
Number of non-default external LSA 0
```

**Table 1:** Example output from the **show ip ospf** command (cont.)

```
External LSA database is unlimited.
Number of LSA originated 0
Number of LSA received 0
Number of areas attached to this router: 2
   Area 0 (BACKBONE) (Inactive)
       Number of interfaces in this area is 0(0)
       Number of fully adjacent neighbors in this area is 0
       Area has no authentication
       SPF algorithm executed 0 times
       Number of LSA 0. Checksum 0x000000

   Area 1 (Inactive)
       Number of interfaces in this area is 0(0)
       Number of fully adjacent neighbors in this area is 0
       Number of fully adjacent virtual neighbors through this area is 0
       Area has no authentication
       SPF algorithm executed 0 times
       Number of LSA 0. Checksum 0x000000
```

**Table 2:** Example output from the **show ip ospf <process-id>** command

```
Routing Process "ospf 100" with ID 10.10.11.146
Process uptime is 0 minute
Conforms to RFC2328, and RFC1583Compatibility flag is disabled
Supports only single TOS(TOS0) routes
Supports opaque LSA
SPF schedule delay 5 secs, Hold time between two SPFs 10 secs
Refresh timer 10 secs
Number of external LSA 0. Checksum Sum 0x0
Number of non-default external LSA 0
External LSA database is unlimited.
Number of areas attached to this router: 1
   Area 1
       Number of interfaces in this area is 1(1)
       Number of fully adjacent neighbors in this area is 0
       Number of fully adjacent virtual neighbors through this area is 0
       Area has no authentication
       SPF algorithm executed 0 times
       Number of LSA 1. Checksum Sum 0x00e3e2
```

**Table 3:** Parameters in the output of the **show ip ospf** command

| Output Parameter | | Meaning |
|---|---|---|
| `Route Licence: Route:` | `Limit` | The maximum number of OSPF routes which may be used for forwarding. |
| | `Allocated` | The current total number of OSPF routes allocated in the OSPF module. |
| | `Visible` | The current number of OSPF routes which may be used for forwarding. |
| | `Internal` | The number of OSPF internal routes used for calculating paths to ASBRs. |
| `Number of external LSA` | | The number of external link-state advertisements |
| `Number of opaque AS LSA` | | Number of opaque link-state advertisements |

**Related commands** router ospf

# show ip ospf border-routers

**Overview** Use this command to display the ABRs and ASBRs for all OSPF instances. Include the process ID parameter with this command to view data about specified instances.

For information on filtering and saving command output, see the "Getting Started with AlliedWare Plus" Feature Overview and Configuration Guide.

**Syntax**

```
show ip ospf border-routers
show ip ospf <process-id> border-routers
```

| Parameter | Description |
|---|---|
| *<process-id>* | *<0-65535>* The ID of the router process for which information will be displayed. |

**Mode** User Exec and Privileged Exec

**Output** Figure 29-3: Example output from the **show ip ospf border-routers** command

```
OSPF process 1 internal Routing Table
Codes: i - Intra-area route, I - Inter-area route
i 10.15.0.1 [10] via 10.10.0.1, vlan2, ASBR, Area 0.0.0.0
i 172.16.10.1 [10] via 10.10.11.50, vlan3, ABR, ASBR, Area
0.0.0.0
```

# show ip ospf database

**Overview** Use this command to display a database summary for OSPF information. Include the process ID parameter with this command to display information about specified instances.

For information on filtering and saving command output, see the "Getting Started with AlliedWare Plus" Feature Overview and Configuration Guide.

**Syntax**

```
show ip ospf [<process-id>] database
[self-originate|max-age|adv router <adv-router-id>]
```

| Parameter | Description |
|---|---|
| *<process-id>* | *<0-65535>* The ID of the router process for which information will be displayed. |
| `self-originate` | Displays self-originated link states. |
| `max-age` | Displays LSAs in MaxAge list. It maintains the list of the all LSAs in the database which have reached the max-age which is 3600 seconds. |
| `adv-router` | Advertising Router LSA. |
| *<adv-router-id>* | The Advertising Router ID (usually entered in IPv4 address format A.B.C.D).<br>Note that this ID component no longer represents an address; it is simply a character string that has an IPv4 address format. |

**Mode** User Exec and Privileged Exec

**Examples** To display the ABRs and ASBRs for all OSPF instances, use the command:

```
awplus# show ip ospf border-routers
```

To display the ABRs and ASBRs for the specific OSPF instance 721, use the command:

```
awplus# show ip ospf 721 border-routers
```

**Output** Figure 29-4: Example output from the **show ip ospf database** command

```
        OSPF Router process 1 with ID (10.10.11.60)
                Router Link States (Area 0.0.0.1)
Link ID         ADV Router      Age  Seq#       CkSum  Link
count
10.10.11.60     10.10.11.60       32 0x80000002 0x472b 1
        OSPF Router process 100 with ID (10.10.11.60)
                Router Link States (Area 0.0.0.0)
Link ID         ADV Router      Age  Seq#       CkSum  Link
count
10.10.11.60     10.10.11.60      219 0x80000001 0x4f5d 0
```

**Example**

```
awplus# show ip ospf database external 1.2.3.4 self-originate
awplus# show ip ospf database self-originate
```

Figure 29-5: Example output from the **show ip ospf database self-originate** command

```
        OSPF Router process 100 with ID (10.10.11.50)
                Router Link States (Area 0.0.0.1 [NSSA])
Link ID         ADV Router      Age  Seq#       CkSum  Link
count
10.10.11.50     10.10.11.50     20  0x80000007  0x65c3 2
                Area-Local Opaque-LSA (Area 0.0.0.1 [NSSA])
Link ID         ADV Router      Age  Seq#       CkSum Opaque ID
67.1.4.217      10.10.11.50     37 0x80000001  0x2129 66777
                AS-Global Opaque-LSA
Link ID         ADV Router      Age  Seq#       CkSum Opaque ID
67.1.4.217      10.10.11.50     37 0x80000001  0x2daa 66777
```

# show ip ospf database asbr-summary

**Overview** Use this command to display information about the Autonomous System Boundary Router (ASBR) summary LSAs.

For information on filtering and saving command output, see the "Getting Started with AlliedWare Plus"_Feature Overview and Configuration Guide.

**Syntax**

```
show ip ospf database asbr-summary [<ip-addr>]
[self-originate|adv-router <advrouter-ip-addr>]
```

| Parameter | Description |
|---|---|
| *<ip-addr>* | A link state ID, as an IP address. |
| `self-originate` | Displays self-originated link states. |
| *adv-router <advrouter-ip-addr>* | Displays all the LSAs of the specified router. |

**Mode** User Exec and Privileged Exec

**Examples**

```
awplus# show ip ospf database asbr-summary 1.2.3.4
self-originate
```

```
awplus# show ip ospf database asbr-summary self-originate
```

```
awplus# show ip ospf database asbr-summary 1.2.3.4 adv-router
2.3.4.5
```

# show ip ospf database external

**Overview** Use this command to display information about the external LSAs.

For information on filtering and saving command output, see the "Getting Started with AlliedWare Plus" Feature Overview and Configuration Guide.

**Syntax**

```
show ip ospf database external adv-router[<adv-router-id>]
[self-originate|adv-router<adv-router-id>]
```

| Parameter | Description |
|---|---|
| `adv-router` | Displays all the LSAs of the specified router. |
| `self-originate` | Displays self-originated link states. |
| `<adv-router- id>` | The Advertising Router ID (usually entered in IPv4 address format A.B.C.D).<br>Note that this ID component no longer represents an address; it is simply a character string that has an IPv4 address format. |

**Mode** User Exec and Privileged Exec

**Examples**

```
awplus# show ip ospf database external 1.2.3.4 self-originate
awplus# show ip ospf database external self-originate
awplus# show ip ospf database external 1.2.3.4 adv-router
2.3.4.5
```

**Output** Figure 29-6: Example output from the **show ip ospf database external self-originate** command

```
       OSPF Router process 100 with ID (10.10.11.50)
                AS External Link States
  LS age: 298
  Options: 0x2 (*|-|-|-|-|-|E|-)
  LS Type: AS-external-LSA
  Link State ID: 10.10.100.0 (External Network Number)
  Advertising Router: 10.10.11.50
  LS Seq Number: 80000001
  Checksum: 0x7033
  Length: 36
  Network Mask: /24
        Metric Type: 2 (Larger than any link state path)
        TOS: 0
        Metric: 20
        Forward Address: 10.10.11.50
        External Route Tag: 0
```

**Output** Figure 29-7: Example output from the **show ip ospf database external adv-router** command

```
awplus#show ip ospf database external adv-router 1.1.1.1

                  AS External Link States
LS age: 273
Options: 0x2 (-|-|-|-|-|-|E|-)
LS Type: AS-external-LSA
Link State ID: 172.16.0.0 (External Network Number)
Advertising Router: 1.1.1.1
LS Seq Number: 80000004
Checksum: 0x02f8
Length: 36
Network Mask: /24
      Metric Type: 2 (Larger than any link state path)
      TOS: 0
      Metric: 20
      Forward Address: 0.0.0.0
      External Route Tag: 0
```

# show ip ospf database network

**Overview** Use this command to display information about the network LSAs.

For information on filtering and saving command output, see the "Getting Started with AlliedWare Plus" Feature Overview and Configuration Guide.

**Syntax**

```
show ip ospf database network [<adv-router-id>]
[self-originate|<adv-router-id>]
```

| Parameter | Description |
|---|---|
| *<adv-router-id>* | The router ID of the advertising router, in IPv4 address format. Note however, that this no longer represents a real address. |
| `self-originate` | Displays self-originated link states. |
| `adv-router` | Displays all the LSAs of the specified router. |

**Mode** User Exec and Privileged Exec

**Examples**

```
awplus# show ip ospf database network 1.2.3.4 self-originate
awplus# show ip ospf database network self-originate
awplus# show ip ospf database network 1.2.3.4 adv-router 2.3.4.5
```

**Output** Figure 29-8: Example output from the **show ip ospf database network** command

```
       OSPF Router process 200 with ID (192.30.30.2)
                Net Link States (Area 0.0.0.0)
  LS age: 1387
  Options: 0x2 (*|-|-|-|-|-|E|-)
  LS Type: network-LSA
  Link State ID: 192.10.10.9 (address of Designated Router)
  Advertising Router: 192.30.30.3
  LS Seq Number: 80000001
  Checksum: 0xe1b0
  Length: 32
  Network Mask: /24
        Attached Router: 192.20.20.1
        Attached Router: 192.30.30.3
       OSPF Router process 200 with ID (192.30.30.2)
                Net Link States (Area 0.0.0.0)
...
```

# show ip ospf database nssa-external

**Overview** Use this command to display information about the NSSA external LSAs.

For information on filtering and saving command output, see the "Getting Started with AlliedWare Plus" Feature Overview and Configuration Guide.

**Syntax**

```
show ip ospf database nssa-external [<ip-address>]
[self-originate|<advrouter>]
```

| Parameter | Description |
|---|---|
| `<advrouter>` | `adv-router <ip-address>` |
| `adv-router` | Displays all the LSAs of the specified router. |
| `<ip-address>` | A link state ID, as an IP address. |
| `self-originate` | Displays self-originated link states. |

**Mode** User Exec and Privileged Exec

**Examples**

```
awplus# show ip ospf database nssa-external 1.2.3.4
self-originate
```

```
awplus# show ip ospf database nssa-external self-originate
```

```
awplus# show ip ospf database nssa-external 1.2.3.4 adv-router
2.3.4.5
```

**Output** Figure 29-9: Example output from the **show ip ospf database nssa-external adv-router** command

```
      OSPF Router process 100 with ID (10.10.11.50)
               NSSA-external Link States (Area 0.0.0.0)
               NSSA-external Link States (Area 0.0.0.1 [NSSA])
  LS age: 78
  Options: 0x0 (*|-|-|-|-|-|-|-)
  LS Type: AS-NSSA-LSA
  Link State ID: 0.0.0.0 (External Network Number For NSSA)
  Advertising Router: 10.10.11.50
  LS Seq Number: 80000001
  Checksum: 0xc9b6
  Length: 36
  Network Mask: /0
        Metric Type: 2 (Larger than any link state path)
        TOS: 0
        Metric: 1
        NSSA: Forward Address: 0.0.0.0
```

```
        OSPF Router process 100 with ID (10.10.11.50)
                NSSA-external Link States (Area 0.0.0.0)
                NSSA-external Link States (Area 0.0.0.1 [NSSA])
  LS age: 78
  Options: 0x0 (*|-|-|-|-|-|-|-)
  LS Type: AS-NSSA-LSA
  Link State ID: 0.0.0.0 (External Network Number For NSSA)
  Advertising Router: 10.10.11.50
  LS Seq Number: 80000001
  Checksum: 0xc9b6
  Length: 36
  Network Mask: /0
        Metric Type: 2 (Larger than any link state path)
        TOS: 0
        Metric: 1
        NSSA: Forward Address: 0.0.0.0
        External Route Tag: 0
                 NSSA-external Link States (Area 0.0.0.1 [NSSA])
```

# show ip ospf database opaque-area

**Overview** Use this command to display information about the area-local (link state type 10) scope LSAs. Type-10 Opaque LSAs are not flooded beyond the borders of their associated area.

For information on filtering and saving command output, see the "Getting Started with AlliedWare Plus" Feature Overview and Configuration Guide.

**Syntax**

```
show ip ospf database opaque-area [<ip-address>]
[self-originate|<advrouter>]
```

| Parameter | Description |
|---|---|
| `<advrouter>` | `adv-router <ip-address>` |
| `adv-router` | Displays all the LSAs of the specified router. |
| `<ip-address>` | A link state ID, as an IP address. |
| `self-originate` | Displays self-originated link states. |

**Mode** User Exec and Privileged Exec

**Examples**

```
awplus# show ip ospf database opaque-area 1.2.3.4
self-originate
```

```
awplus# show ip ospf database opaque-area self-originate
```

```
awplus# show ip ospf database opaque-area 1.2.3.4 adv-router
2.3.4.5
```

**Output** Figure 29-10: Example output from the **show ip ospf database opaque-area** command

```
       OSPF Router process 100 with ID (10.10.11.50)
                 Area-Local Opaque-LSA (Area 0.0.0.0)
  LS age: 262
  Options: 0x2 (*|-|-|-|-|-|E|-)
  LS Type: Area-Local Opaque-LSA
  Link State ID: 10.0.25.176 (Area-Local Opaque-Type/ID)
  Opaque Type: 10
  Opaque ID: 6576
  Advertising Router: 10.10.11.50
  LS Seq Number: 80000001
  Checksum: 0xb413
  Length: 26
```

# show ip ospf database opaque-as

**Overview** Use this command to display information about the link-state type 11 LSAs. This type of link-state denotes that the LSA is flooded throughout the Autonomous System (AS).

For information on filtering and saving command output, see the "Getting Started with AlliedWare Plus" Feature Overview and Configuration Guide.

**Syntax**

```
show ip ospf database opaque-as [<ip-address>]
[self-originate|<advrouter>]
```

| Parameter | Description |
|---|---|
| `<advrouter>` | `adv-router <ip-address>` |
| `adv-router` | Displays all the LSAs of the specified router. |
| `<ip-address>` | A link state ID, as an IP address. |
| `self-originate` | Displays self-originated link states. |

**Mode** User Exec and Privileged Exec

**Examples**

```
awplus# show ip ospf database opaque-as 1.2.3.4 self-originate
awplus# show ip ospf database opaque-as self-originate
awplus# show ip ospf database opaque-as 1.2.3.4 adv-router
2.3.4.5
```

**Output** Figure 29-11: Example output from the **show ip ospf database opaque-as** command

```
       OSPF Router process 100 with ID (10.10.11.50)
                AS-Global Opaque-LSA
  LS age: 325
  Options: 0x2 (*|-|-|-|-|-|E|-)
  LS Type: AS-external Opaque-LSA
  Link State ID: 11.10.9.23 (AS-external Opaque-Type/ID)
  Opaque Type: 11
  Opaque ID: 657687
  Advertising Router: 10.10.11.50
  LS Seq Number: 80000001
  Checksum: 0xb018
  Length: 25
```

# show ip ospf database opaque-link

**Overview** Use this command to display information about the link-state type 9 LSAs. This type denotes a link-local scope. The LSAs are not flooded beyond the local network.

For information on filtering and saving command output, see the "Getting Started with AlliedWare Plus" Feature Overview and Configuration Guide.

**Syntax**

```
show ip ospf database opaque-link [<ip-address>]
[self-originate|<advrouter>]
```

| Parameter | Description |
|---|---|
| `<advrouter>` | `adv-router <ip-address>` |
| `adv-router` | Displays all the LSAs of the specified router. |
| `<ip-address>` | A link state ID, as an IP address. |
| `self-originate` | Displays self-originated link states. |

**Mode** User Exec and Privileged Exec

**Examples**

```
awplus# show ip ospf database opaque-link 1.2.3.4
self-originate
```

```
awplus# show ip ospf database opaque-link self-originate
```

```
awplus# show ip ospf database opaque-link 1.2.3.4 adv-router
2.3.4.5
```

**Output** Figure 29-12: Example output from the **show ip ospf database opaque-link** command

```
       OSPF Router process 100 with ID (10.10.11.50)
                Link-Local Opaque-LSA (Link hme0:10.10.10.50)
  LS age: 276
  Options: 0x2 (*|-|-|-|-|-|E|-)
  LS Type: Link-Local Opaque-LSA
  Link State ID: 10.0.220.247 (Link-Local Opaque-Type/ID)
  Opaque Type: 10
  Opaque ID: 56567
  Advertising Router: 10.10.11.50
  LS Seq Number: 80000001
  Checksum: 0x744e
  Length: 26
                Link-Local Opaque-LSA (Link hme1:10.10.11.50)
```

# show ip ospf database router

**Overview** Use this command to display information only about the router LSAs.

For information on filtering and saving command output, see the "Getting Started with AlliedWare Plus" Feature Overview and Configuration Guide.

**Syntax**

```
show ip ospf database router [<adv-router-id>
self-originate|<adv-router-id>]
```

| Parameter | Description |
|---|---|
| `adv-router` | Displays all the LSAs of the specified router. |
| `self-originate` | Displays self-originated link states. |
| `<adv-router- id>` | The router ID of the advertising router, in IPv4 address format. Note however, that this no longer represents a real address. |

**Mode** User Exec and Privileged Exec

**Examples**

```
awplus# show ip ospf database router 1.2.3.4 self-originate
awplus# show ip ospf database router self-originate
awplus# show ip ospf database router 1.2.3.4 adv-router 2.3.4.5
```

**Output** Figure 29-13: Example output from the **show ip ospf database router** command

```
       OSPF Router process 100 with ID (10.10.11.50)
                Router Link States (Area 0.0.0.0)
  LS age: 878
  Options: 0x2 (*|-|-|-|-|-|E|-)
  Flags: 0x3 : ABR ASBR
  LS Type: router-LSA
  Link State ID: 10.10.11.50
  Advertising Router: 10.10.11.50
  LS Seq Number: 80000004
  Checksum: 0xe39e
  Length: 36
   Number of Links: 1
    Link connected to: Stub Network
     (Link ID) Network/subnet number: 10.10.10.0
     (Link Data) Network Mask: 255.255.255.0
      Number of TOS metrics: 0
       TOS 0 Metric: 10
```

```
                Router Link States (Area 0.0.0.1)
  LS age: 877
  Options: 0x2 (*|-|-|-|-|-|E|-)
  Flags: 0x3 : ABR ASBR
  LS Type: router-LSA
  Link State ID: 10.10.11.50
  Advertising Router: 10.10.11.50
  LS Seq Number: 80000003
  Checksum: 0xee93
  Length: 36
   Number of Links: 1
    Link connected to: Stub Network
     (Link ID) Network/subnet number: 10.10.11.0
     (Link Data) Network Mask: 255.255.255.0
      Number of TOS metrics: 0
       TOS 0 Metric: 10
```

# show ip ospf database summary

**Overview** Use this command to display information about the summary LSAs.

For information on filtering and saving command output, see the "Getting Started with AlliedWare Plus" Feature Overview and Configuration Guide.

**Syntax**

```
show ip ospf database summary [<ip-address>]
[self-originate|<advrouter>]
```

| Parameter | Description |
|---|---|
| `<advrouter>` | `adv-router <ip-address>` |
| `adv-router` | Displays all the LSAs of the specified router. |
| `<ip-address>` | A link state ID, as an IP address. |
| `self-originate` | Displays self-originated link states. |

**Mode** User Exec and Privileged Exec

**Examples**

```
awplus# show ip ospf database summary 1.2.3.4 self-originate
awplus# show ip ospf database summary self-originate
awplus# show ip ospf database summary 1.2.3.4 adv-router 2.3.4.5
```

**Output** Figure 29-14: Example output from the **show ip ospf database summary** command

```
        OSPF Router process 100 with ID (10.10.11.50)
                Summary Link States (Area 0.0.0.0)
                Summary Link States (Area 0.0.0.1)
  LS age: 1124
  Options: 0x2 (*|-|-|-|-|-|E|-)
  LS Type: summary-LSA
  Link State ID: 10.10.10.0 (summary Network Number)
  Advertising Router: 10.10.11.50
  LS Seq Number: 80000001
  Checksum: 0x41a2
  Length: 28
  Network Mask: /24
        TOS: 0  Metric: 10
```

Figure 29-15: Example output from the **show ip ospf database summary self-originate** command

```
        OSPF Router process 100 with ID (10.10.11.50)
                Summary Link States (Area 0.0.0.0)
  LS age: 1061
  Options: 0x2 (*|-|-|-|-|-|E|-)
  LS Type: summary-LSA
  Link State ID: 10.10.11.0 (summary Network Number)
  Advertising Router: 10.10.11.50
  LS Seq Number: 80000001
  Checksum: 0x36ac
  Length: 28
  Network Mask: /24
        TOS: 0  Metric: 10
                Summary Link States (Area 0.0.0.1)
  LS age: 1061
  Options: 0x2 (*|-|-|-|-|-|E|-)
LS Type: summary-LSA
  Link State ID: 10.10.11.0 (summary Network Number)
  Advertising Router: 10.10.11.50
  LS Seq Number: 80000001
  Checksum: 0x36ac
  Length: 28
  Network Mask: /24
        TOS: 0  Metric: 10
                Summary Link States (Area 0.0.0.1)
  LS age: 1061
  Options: 0x2 (*|-|-|-|-|-|E|-)
  LS Type: summary-LSA
  Link State ID: 10.10.10.0 (summary Network Number)
  Advertising Router: 10.10.11.50
  LS Seq Number: 80000001
  Checksum: 0x41a2
  Length: 28
  Network Mask: /24
        TOS: 0  Metric: 10
```

Figure 29-16: Example output from the **show ip ospf database summary adv-router** <*ip-address*> command

```
        OSPF Router process 100 with ID (10.10.11.50)
                Summary Link States (Area 0.0.0.0)
  LS age: 989
  Options: 0x2 (*|-|-|-|-|-|E|-)
  LS Type: summary-LSA
  Link State ID: 10.10.11.0 (summary Network Number)
  Advertising Router: 10.10.11.50
  LS Seq Number: 80000001
  Checksum: 0x36ac
  Length: 28
  Network Mask: /24
        TOS: 0  Metric: 10
               Summary Link States (Area 0.0.0.1)
  LS age: 989
  Options: 0x2 (*|-|-|-|-|-|E|-)
LS Type: summary-LSA
  Link State ID: 10.10.11.0 (summary Network Number)
  Advertising Router: 10.10.11.50
  LS Seq Number: 80000001
  Checksum: 0x36ac
  Length: 28
  Network Mask: /24
        TOS: 0  Metric: 10
```

# show ip ospf interface

**Overview** Use this command to display interface information for OSPF.

For information on filtering and saving command output, see the "Getting_Started with AlliedWare Plus" Feature Overview and Configuration_Guide.

**Syntax** `show ip ospf interface [<interface-name>]`

| Parameter | Description |
|---|---|
| *<interface-name>* | The VLAN name, for example vlan3. |

**Mode** User Exec and Privileged Exec

**Examples** `awplus# show ip ospf interface vlan2`

**Output** Figure 29-17: Example output from the **show ip ospf interface** command

```
vlan2 is up, line protocol is up
  Internet Address 1.1.1.1/24, Area 0.0.0.0, MTU 1500
  Process ID 0, Router ID 33.33.33.33, Network Type BROADCAST, Cost: 10
  Transmit Delay is 1 sec, State Waiting, Priority 1, TE Metric 0
  No designated router on this network
  No backup designated router on this network
  Timer intervals configured, Hello 10, Dead 40, Wait 40, Retransmit 5
    Hello due in 00:00:02
  Neighbor Count is 0, Adjacent neighbor count is 0
  Crypt Sequence Number is 1106347721
  Hello received 0 sent 1, DD received 0 sent 0
  LS-Req received 0 sent 0, LS-Upd received 0 sent 0
  LS-Ack received 0 sent 0, Discarded 0
```

# show ip ospf neighbor

**Overview** Use this command to display information on OSPF neighbors. Include the **ospf-id** parameter with this command to display information about specified instances.

For information on filtering and saving command output, see the "Getting Started with AlliedWare Plus" Feature Overview and Configuration Guide.

**Syntax**

```
show ip ospf [<ospf-id>] neighbor <neighbor-ip-addr> [detail]
show ip ospf [<ospf-id>] neighbor detail [all]
show ip ospf [<ospf-id>] neighbor [all]
show ip ospf [<ospf-id>] neighbor interface <ip-addr>
```

| Parameter | Description |
|---|---|
| *<ospf-id>* | <0-65535> The ID of the router process for which information will be displayed. |
| *<neighbor-ip-addr>* | The Neighbor ID, entered as an IP address. |
| `all` | Include downstatus neighbor. |
| `detail` | Detail of all neighbors. |
| *<ip-addr>* | IP address of the interface. |

**Mode** User Exec and Privileged Exec

**Examples**

```
awplus# show ip ospf neighbor detail
awplus# show ip ospf neighbor 1.2.3.4
awplus# show ip ospf neighbor interface 10.10.10.50 detail all
```

**Output** Note that before a device enters OSPF Graceful Restart it first informs its OSPF neighbors. In the **show** output, the * symbol beside the **Dead Time** parameter indicates that the device has been notified of a neighbor entering the graceful restart state, as shown in the figures below.

Figure 29-18: Example output from the **show ip ospf neighbor** command

```
OSPF process 1:
Neighbor ID     Pri   State           Dead Time   Address         Interface
10.10.10.50       1   Full/DR         00:00:38    10.10.10.50     vlan1
OSPF process 100:
Neighbor ID     Pri   State           Dead Time   Address         Interface
10.10.11.50       1   Full/Backup     00:00:31    10.10.11.50     vlan2
awplus#show ip ospf 1 neighbor
OSPF process 1:
Neighbor ID     Pri   State           Dead Time   Address         Interface
10.10.10.50       1   Full/DR         00:00:38*   10.10.10.50     vlan1
```

Figure 29-19: Example output from the **show ip ospf <ospf-id> neighbor** command

```
OSPF process 100:
Neighbor ID     Pri   State           Dead Time   Address         Interface
192.168.0.3      50   2-Way/DROther   00:01:59*   192.168.200.3   vlan200
```

Figure 29-20: Example output from the **show ip ospf neighbor detail** command

```
 Neighbor 10.10.10.50, interface address 10.10.10.50
    In the area 0.0.0.0 via interface vlan5
    Neighbor priority is 1, State is Full, 5 state changes
    DR is 10.10.10.50, BDR is 10.10.10.10
    Options is 0x42 (*|O|-|-|-|-|E|-)
    Dead timer due in 00:00:38
    Neighbor is up for 00:53:07
    Database Summary List 0
    Link State Request List 0
    Link State Retransmission List 0
    Crypt Sequence Number is 0
    Thread Inactivity Timer on
    Thread Database Description Retransmission off
    Thread Link State Request Retransmission off
    Thread Link State Update Retransmission on
 Neighbor 10.10.11.50, interface address 10.10.11.50
    In the area 0.0.0.0 via interface vlan2
    Neighbor priority is 1, State is Full, 5 state changes
    DR is 10.10.11.10, BDR is 10.10.11.50
    Options is 0x42 (*|O|-|-|-|-|E|-)
    Dead timer due in 00:00:31
    Neighbor is up for 00:26:50
    Database Summary List 0
    Link State Request List 0
    Link State Retransmission List 0
    Crypt Sequence Number is 0
    Thread Inactivity Timer on
    Thread Database Description Retransmission off
    Thread Link State Request Retransmission off
    Thread Link State Update Retransmission on
```

# show ip ospf route

**Overview** Use this command to display the OSPF routing table. Include the **ospf-id** parameter with this command to display the OSPF routing table for specified instances.

For information on filtering and saving command output, see the "Getting Started with AlliedWare Plus" Feature Overview and Configuration Guide.

**Syntax**

```
show ip ospf [<ospf-id>] route
```

| Parameter | Description |
|---|---|
| *<ospf-id>* | <0-65535> The ID of the router process for which information will be displayed. If this parameter is included, only the information for this specified routing process is displayed. |

**Mode** User Exec and Privileged Exec

**Examples** To display the OSPF routing table, use the command:

```
awplus# show ip ospf route
```

**Output** Figure 29-21: Example output from the **show ip ospf route** command for a specific process

```
OSPF process 1:
Codes: C - connected, D - Discard, O - OSPF, IA - OSPF inter area
       N1 - OSPF NSSA external type 1, N2 - OSPF NSSA external type 2
       E1 - OSPF external type 1, E2 - OSPF external type 2
O  10.10.0.0/24 [10] is directly connected, vlan1, Area 0.0.0.0
O  10.10.11.0/24 [10] is directly connected, vlan2, Area 0.0.0.0
O  10.10.11.100/32 [10] is directly connected, lo, Area 0.0.0.0
E2 10.15.0.0/24 [10/50] via 10.10.0.1, vlan1
IA 172.16.10.0/24 [30] via 10.10.11.50, vlan2, Area 0.0.0.0
E2 192.168.0.0/16 [10/20] via 10.10.11.50, vlan2
```

# show ip ospf virtual-links

**Overview** Use this command to display virtual link information.

For information on filtering and saving command output, see the "Getting Started with AlliedWare Plus" Feature Overview and Configuration Guide.

**Syntax**

```
show ip ospf virtual-links
```

**Mode** User Exec and Privileged Exec

**Examples** To display virtual link information, use the command:

```
awplus# show ip ospf virtual-links
```

**Output** Figure 29-22: Example output from the **show ip ospf virtual-links** command

```
Virtual Link VLINK0 to router 10.10.0.9 is up
  Transit area 0.0.0.1 via interface vlan5
  Transmit Delay is 1 sec, State Point-To-Point,
  Timer intervals configured, Hello 10, Dead 40, Wait 40,
Retransmit 5
    Hello due in 00:00:02
    Adjacency state Full
Virtual Link VLINK1 to router 10.10.0.123 is down
  Transit area 0.0.0.1 via interface *
  Transmit Delay is 1 sec, State Down,
  Timer intervals configured, Hello 10, Dead 40, Wait 40,
Retransmit 5
    Hello due in inactive
    Adjacency state Down
```

# show ip protocols ospf

**Overview** Use this command to display OSPF process parameters and statistics.

For information on filtering and saving command output, see the "Getting Started with AlliedWare Plus" Feature Overview and Configuration Guide.

**Syntax** `show ip protocols ospf`

**Mode** User Exec and Privileged Exec

**Examples** To display OSPF process parameters and statistics, use the command:

```
awplus# show ip protocols ospf
```

**Output** Figure 29-23: Example output from the **show ip protocols ospf** command

```
Routing Protocol is "ospf 200"
  Invalid after 0 seconds, hold down 0, flushed after 0
  Outgoing update filter list for all interfaces is
    Redistributed kernel filtered by filter1
  Incoming update filter list for all interfaces is
  Redistributing: kernel
  Routing for Networks:
    192.30.30.0/24
    192.40.40.0/24
  Routing Information Sources:
    Gateway         Distance      Last Update
  Distance: (default is 110)
    Address         Mask            Distance List
```

# summary-address

**Overview** Use this command to summarize, or possibly suppress, external routes that have the specified address range.

Use the **no** variant of this command to stop summarizing, or suppressing, external routes that have the specified address range.

**Syntax**

`summary-address <ip-addr/prefix-length> [not-advertise] [tag <0-4294967295>]`

`no summary-address <ip-addr/prefix-length> [not-advertise] [tag <0-4294967295>]`

| Parameter | Description |
|---|---|
| *<ip-addr/prefix-length>* | Specifies the base IP address of the summary address.The range of addresses given as IPv4 starting address and a prefix length. |
| `not-advertise` | Set the **not-advertise** option if you do not want OSPF to advertise either the summary address or the individual networks within the range of the summary address. |
| `tag <0-4294967295>` | The tag parameter specifies the tag value that OSPF places in the AS external LSAs created as a result of redistributing the summary route. The tag overrides tags set by the original route. |

**Default** The default tag value for a summary address is 0.

**Mode** Router Configuration

**Usage notes** An address range is a pairing of an address and a mask that is almost the same as IP network number. For example, if the specified address range is 192.168.0.0/255.255.240.0, it matches: 192.168.1.0/24, 192.168.4.0/22, 192.168.8.128/25 and so on.

Redistributing routes from other protocols into OSPF requires the router to advertise each route individually in an external LSA. Use the **summary address** command to advertise one summary route for all redistributed routes covered by a specified network address and mask. This helps decrease the size of the OSPF link state database.

Ensure OSPF routes exist in the summary address range for advertisement before using this command.

**Example** The following example uses the **summary-address** command to aggregate external LSAs that match the network 172.16.0.0/16 and assign a Tag value of 3.

```
awplus# configure terminal
awplus(config)# router ospf 100
awplus(config-router)# summary-address 172.16.0.0/16 tag 3
```

# timers spf exp

**Overview** Use this command to adjust route calculation timers using exponential back-off delays.

Use **no** form of this command to return to the default exponential back-off timer values.

**Syntax**

```
timers spf exp <min-holdtime> <max-holdtime>
no timers spf exp
```

| Parameter | Description |
|---|---|
| *<min-holdtime>* | *<0-2147483647>*<br>Specifies the minimum delay between receiving a change to the SPF calculation in milliseconds. The default SPF min-holdtime value is 50 milliseconds. |
| *<max-holdtime>* | *<0-2147483647>*<br>Specifies the maximum delay between receiving a change to the SPF calculation in milliseconds. The default SPF max-holdtime value is 50 seconds. |

**Mode** Router Configuration

**Default** The default SPF min-holdtime is 50 milliseconds. The default SPF max-holdtime is 40 seconds.

**Usage** This command configures the minimum and maximum delay time between the receipt of a topology change and the calculation of the Shortest Path First (SPF).

**Examples** To set the minimum delay time to 5 milliseconds and maximum delay time to 10 milliseconds, use the commands:

```
awplus# configure terminal
awplus(config)# router ospf 100
awplus(config-router)# timers spf exp 5 10
```

To reset the minimum and maximum delay times to the default values, use the commands:

```
awplus# configure terminal
awplus(config)# router ospf 100
awplus(config-router)# no timers spf exp
```

**Related commands** timers spf exp

# undebug ospf events

**Overview** This command applies the functionality of the no debug ospf events command.

# undebug ospf ifsm

**Overview** This command applies the functionality of the no debug ospf ifsm command.

# undebug ospf lsa

**Overview** This command applies the functionality of the no debug ospf lsa command.

# undebug ospf nfsm

**Overview** This command applies the functionality of the no debug ospf nfsm command.

# undebug ospf nsm

**Overview** This command applies the functionality of the no debug ospf nsm command.

# undebug ospf packet

**Overview** This command applies the functionality of the no debug ospf packet command.

# undebug ospf route

**Overview** This command applies the functionality of the no debug ospf route command.

# 30 OSPFv3 for IPv6 Commands

## Introduction

**Overview** This chapter provides an alphabetical reference of commands used to configure OSPFv3 for IPv6. See the OSPFv3 Feature Overview and Configuration Guide for more information and examples.

**Command List**


- "abr-type" on page 1135
- "area authentication ipsec spi" on page 1136
- "area default-cost (IPv6 OSPF)" on page 1138
- "area encryption ipsec spi esp" on page 1139
- "area range (IPv6 OSPF)" on page 1142
- "area stub (IPv6 OSPF)" on page 1144
- "area virtual-link (IPv6 OSPF)" on page 1145
- "area virtual-link authentication ipsec spi" on page 1147
- "area virtual-link encryption ipsec spi" on page 1149
- "auto-cost reference bandwidth (IPv6 OSPF)" on page 1152
- "bandwidth" on page 1154
- "clear ipv6 ospf process" on page 1155
- "debug ipv6 ospf events" on page 1156
- "debug ipv6 ospf ifsm" on page 1157
- "debug ipv6 ospf lsa" on page 1158
- "debug ipv6 ospf nfsm" on page 1159
- "debug ipv6 ospf packet" on page 1160
- "debug ipv6 ospf route" on page 1161
- "default-information originate" on page 1162

- "default-metric (IPv6 OSPF)" on page 1163
- "distance (IPv6 OSPF)" on page 1164
- "ipv6 ospf authentication spi" on page 1166
- "ipv6 ospf cost" on page 1168
- "ipv6 ospf dead-interval" on page 1170
- "ipv6 ospf display route single-line" on page 1171
- "ipv6 ospf encryption spi esp" on page 1172
- "ipv6 ospf hello-interval" on page 1175
- "ipv6 ospf neighbor" on page 1176
- "ipv6 ospf network" on page 1178
- "ipv6 ospf priority" on page 1179
- "ipv6 ospf retransmit-interval" on page 1180
- "ipv6 ospf transmit-delay" on page 1181
- "ipv6 router ospf area" on page 1182
- "max-concurrent-dd (IPv6 OSPF)" on page 1184
- "passive-interface (IPv6 OSPF)" on page 1185
- "redistribute (IPv6 OSPF)" on page 1186
- "restart ipv6 ospf graceful" on page 1188
- "router ipv6 ospf" on page 1189
- "router-id (IPv6 OSPF)" on page 1190
- "show debugging ipv6 ospf" on page 1191
- "show ipv6 ospf" on page 1192
- "show ipv6 ospf database" on page 1194
- "show ipv6 ospf database external" on page 1196
- "show ipv6 ospf database grace" on page 1197
- "show ipv6 ospf database inter-prefix" on page 1198
- "show ipv6 ospf database inter-router" on page 1199
- "show ipv6 ospf database intra-prefix" on page 1200
- "show ipv6 ospf database link" on page 1201
- "show ipv6 ospf database network" on page 1202
- "show ipv6 ospf database router" on page 1204
- "show ipv6 ospf interface" on page 1209
- "show ipv6 ospf neighbor" on page 1211
- "show ipv6 ospf route" on page 1213
- "show ipv6 ospf virtual-links" on page 1215

- "summary-address (IPv6 OSPF)" on page 1216
- "timers spf exp (IPv6 OSPF)" on page 1218
- "undebug ipv6 ospf events" on page 1219
- "undebug ipv6 ospf ifsm" on page 1220
- "undebug ipv6 ospf lsa" on page 1221
- "undebug ipv6 ospf nfsm" on page 1222
- "undebug ipv6 ospf packet" on page 1223
- "undebug ipv6 ospf route" on page 1224

# abr-type

**Overview** Use this command to set an OSPF Area Border Router (ABR) type.

Use the **no** variant of this command to revert the ABR type to the default setting (cisco).

**Syntax**

```
abr-type {cisco|ibm|standard}
no abr-type {cisco|ibm|standard}
```

| Parameter | Description |
|---|---|
| `cisco` | Specifies an alternative ABR using Cisco implementation (RFC 3509). This is the default ABR type. |
| `ibm` | Specifies an alternative ABR using IBM implementation (RFC 3509). |
| `standard` | Specifies a standard behavior ABR (RFC 2328). |

**Default** ABR type cisco

**Mode** Router Configuration

**Usage notes** Specifying the ABR type allows better interoperation between different implementations. This command is specially useful in a multi-vendor environment. The different ABR types are:

- Cisco ABR Type: By this definition, a router is considered an ABR if it has more than one area actively attached and one of them is the backbone area.
- IBM ABR Type: By this definition, a router is considered an ABR if it has more than one area actively attached and the backbone area is configured. In this case the configured backbone need not be actively connected.
- Standard ABR Type: By this definition, a router is considered an ABR if it has more than one area actively attached to it.

**Example** To set the ABR type to “ibm” use the following commands:

```
awplus# configure terminal
awplus(config)# router ipv6 ospf 100
awplus(config-router)# abr-type ibm
```

# area authentication ipsec spi

**Overview** Use this command in Router Configuration mode to enable either MD5 (Message-Digest 5) or SHA1 (Secure Hash Algorithm 1) authentication for a specified OSPF area.

Use the **no** variant of this command in Router Configuration mode to disable the authentication configured for a specified OSPF area.

**Syntax**

```
area <area-id> authentication ipsec spi <256-4294967295> {md5 <MD5-key>|sha1 <SHA1-key>}
no area <area-id> authentication ipsec spi <256-4294967295>
```

| Parameter | Description | |
|---|---|---|
| *<area-id>* | The OSPF area that you are specifying the summary route default-cost for. This can be entered in either dotted decimal format or normal decimal format. Use one of the following formats: | |
| | *<ip-addr>* | OSPF area-ID expressed in IPv4 address format A.B.C.D. |
| | *<0-4294967295>* | OSPF area-ID expressed as a decimal number within the range shown. |
| | For example, the values 0.0.1.2 and decimal 258 would both define the same area-ID. | |
| *<256-4294967295>* | Specify an SPI (Security Parameters Index) value in the range 256 to 4294967295, entered as a decimal integer. | |
| md5 | Specify the MD5 (Message-Digest 5) hashing algorithm. | |
| *<MD5-key>* | Enter an MD5 key containing up to 32 hexadecimal characters. | |
| sha1 | Specify the SHA-1 (Secure Hash Algorithm 1) hashing algorithm. | |
| *<SHA1-key>* | Enter an SHA-1 key containing up to 40 hexadecimal characters. | |

**Mode** Router Configuration

**Usage notes** Use this command on an OSPFv3 area; use the area virtual-link authentication ipsec spi command on an OSPFv3 area virtual link. Configure the same SPI (Security Parameters Index) value on all interfaces that connect to the same link. SPI values are used by link interfaces. Use a different SPI value for a different link interface when using OSPFv3 with link interfaces.

Use the **sha1** keyword to choose SHA-1 authentication instead of entering the **md5** keyword to use MD5 authentication. The SHA-1 algorithm is more secure than the MD5 algorithm. SHA-1 uses a 40 hexadecimal character key instead of a 32 hexadecimal character key as used for MD5 authentication.

See the OSPFv3 Feature Overview and Configuration Guide for more information and examples.

***NOTE:*** *You can configure an authentication security policy (SPI) on an OSPFv3 area with this command, or on a VLAN interface with the ipv6 ospf authentication spi command.*

*When you configure authentication for an area, the security policy is applied to all VLAN interfaces in the area. However, we recommend a different authentication security policy is applied to each interface for higher security.*

*If you apply the **ipv6 ospf authentication null** command, this affects authentication configured on both the VLAN interface and the OSPFv3 area.*

*This is due to OSPFv3 hello messages ingressing VLAN interfaces, which are part of area authentication, not being authenticated. So neighbors time out.*

**Example**

To enable MD5 authentication with a 32 hexadecimal character key for OPSPF area 1, use the commands:

```
awplus# configure terminal
awplus(config)# router ipv6 ospf
awplus(config-router)# area 1 authentication ipsec spi 1000 md5
1234567890ABCDEF1234567890ABCDEF
```

To enable SHA-1 authentication with a 40 hexadecimal character key for OPSPF area 1, use the commands:

```
awplus# configure terminal
awplus(config)# router ipv6 ospf
awplus(config-router)# area 1 authentication ipsec spi 1000
sha1 1234567890ABCDEF1234567890ABCDEF12345678
```

To disable authentication for OPSPF area 1, use the commands:

```
awplus# configure terminal
awplus(config)# router ipv6 ospf
awplus(config-router)# no area 1 authentication ipsec spi 1000
```

**Related commands**

area encryption ipsec spi esp

area virtual-link authentication ipsec spi

area virtual-link encryption ipsec spi

ipv6 ospf authentication spi

ipv6 ospf encryption spi esp

show ipv6 ospf

# area default-cost (IPv6 OSPF)

**Overview** This command specifies a cost for the default summary route sent into a stub area.

The **no** variant of this command removes the assigned default-route cost.

**Syntax**

```
area <area-id> default-cost <0-16777215>
no area <area-id> default-cost
```

| Parameter | Description | |
|---|---|---|
| *<area-id>* | The OSPF area that you are specifying the summary route default-cost for. This can be entered in either dotted decimal format or normal decimal format. Use one of the following formats: | |
| | *<ip-addr>* | OSPF area-ID expressed in IPv4 address format A.B.C.D. |
| | *<0-4294967295>* | OSPF area-ID expressed as a decimal number within the range shown. |
| | For example, the values 0.0.1.2 and decimal 258 would both define the same area-ID. | |
| `default-cost` | Indicates the cost for the default summary route used for a stub area.<br>Default: **1** | |

**Mode** Router Configuration

**Usage** The default-cost option provides the metric for the summary default route, generated by the area border router, into the stub area. Use this option only on an area border router that is attached to the stub area.

**Example** To set the default cost to 10 in area 1 for the OSPF process P2, use the commands:

```
awplus# configure terminal
awplus(config)# router ipv6 ospf P2
awplus(config-router)# area 1 default-cost 10
```

**Related commands** area stub (IPv6 OSPF)

# area encryption ipsec spi esp

**Overview** Use this command in Router Configuration mode to enable either AES-CBC (Advanced Encryption Standard-Cipher Block Chaining) or 3DES (Triple Data Encryption Standard) ESP (Encapsulating Security Payload) encryption for a specified OSPF area.

Use the **no** variant of this command in Router Configuration mode to disable the encryption configured for a specified OSPF area.

**Syntax**

```
area <area-id> encryption ipsec spi <256-4294967295> esp
{aes-cbc <AES-CBC-key>|3des <3DES-key>|null}{md5
<MD5-key>|sha1 <SHA1-key>}
```

```
no area <area-id> encryption ipsec spi <256-4294967295>
```

| Parameter | Description | |
|---|---|---|
| *<area-id>* | The OSPF area that you are specifying the summary route default-cost for. This can be entered in either dotted decimal format or normal decimal format. Use one of the following formats: | |
| | *<ip-addr>* | OSPF area-ID expressed in IPv4 address format A.B.C.D. |
| | *<0-4294967295>* | OSPF area-ID expressed as a decimal number within the range shown. |
| | For example, the values 0.0.1.2 and decimal 258 would both define the same area-ID. | |
| *<256-4294967295>* | Specify an SPI (Security Parameters Index) value in the range 256 to 4294967295, entered as a decimal integer. | |
| esp | Specify the esp keyword (Encapsulating Security Payload) to then apply either AES-CBC or 3DES encryption. | |
| aes-cbc | Specify this keyword to enable AES-CBC (Advanced Encryption Standard-Cipher Block Chaining) encryption. | |
| *<AES-CBC-key>* | Enter an AES-CBC key containing either 32, 48, or 64 hexadecimal characters. | |
| 3des | Specify 3DES (Triple Data Encryption Standard) encryption. | |
| *<3DES-key>* | Enter a 3DES key containing 48 hexadecimal characters. | |
| null | Specify ESP without AES-CBC or 3DES encryption applied. | |
| md5 | Specify the MD5 (Message-Digest 5) encryption algorithm. | |
| *<MD5-key>* | Enter an MD5 key containing 32 hexadecimal characters. | |
| sha1 | Specify the SHA-1 (Secure Hash Algorithm 1) encryption algorithm. | |
| *<SHA1-key>* | Enter an SHA-1 key containing 40 hexadecimal characters. | |

**Mode** Router Configuration

## Usage notes

When you issue this command, authentication and encryption are both enabled.

Use this command on an OSPFv3 area, use the area virtual-link encryption ipsec spi command on an OSPFv3 area virtual link. Configure the same SPI (Security Parameters Index) value on all interfaces that connect to the same link. SPI values are used by link interfaces. Use a different SPI value for a different link interface when using OSPFv3 with link interfaces.

Security is achieved using the IPv6 ESP extension header. The IPv6 ESP extension header is used to provide confidentiality, integrity, authentication, and confidentiality. Authentication fields are removed from OSPF for IPv6 packet headers, so applying IPv6 ESP extension headers are required for integrity, authentication, and confidentiality.

Use the **sha1** keyword to choose SHA-1 authentication instead of entering the **md5** keyword to use MD5 authentication. The SHA-1 algorithm is more secure than the MD5 algorithm. SHA-1 uses a 40 hexadecimal character key instead of a 32 hexadecimal character key as used for MD5 authentication.

See the OSPFv3 Feature Overview and Configuration Guide for more information and examples.

***NOTE:*** *You can configure an encryption security policy (SPI) on an OSPFv3 area with this command, or on a VLAN interface with the ipv6 ospf encryption spi esp command.*

*When you configure encryption for an area, the security policy is applied to all VLAN interfaces in the area. However, we recommend a different encryption security policy is applied to each interface for higher security.*

*If you apply the **ipv6 ospf encryption null** command, this affects encryption configured on both the VLAN interface and the OSPFv3 area.*

*This is due to OSPFv3 hello messages ingressing VLAN interfaces, which are part of area encryption, not being being encrypted. So neighbors time out.*

## Example

To enable ESP encryption, but not apply an AES-CBC key or an 3DES key, and MD5 authentication with a 32 hexadecimal character key for OPSPF area 1, use the commands:

```
awplus# configure terminal
awplus(config)# router ipv6 ospf
awplus(config-router)# area 1 encryption ipsec spi 1000 esp null
md5 1234567890ABCDEF1234567890ABCDEF
```

To enable ESP encryption, but not apply an AES-CBC key or an 3DES key, and SHA-1 authentication with a 40 hexadecimal character key for OPSPF area 1, use the commands:

```
awplus# configure terminal
awplus(config)# router ipv6 ospf
awplus(config-router)# area 1 encryption ipsec spi 1000 esp null
sha1 1234567890ABCDEF1234567890ABCDEF12345678
```

To enable ESP encryption with a 48 hexadecimal character 3DES key and a 32 hexadecimal character MD5 authentication for OPSPF area 1, use the commands:

```
awplus# configure terminal
awplus(config)# router ipv6 ospf
awplus(config-router)# area 1 encryption ipsec spi 1000 esp 3des
1234567890ABCDEF1234567890ABCDEF1234567890ABCDEF md5
1234567890ABCDEF1234567890ABCDEF
```

To enable ESP encryption with a 32 hexadecimal character AES-CBC key, and a 40 hexadecimal character SHA-1 authentication key for OPSPF area 1, use the commands:

```
awplus# configure terminal
awplus(config)# router ipv6 ospf
awplus(config-router)# area 1 encryption ipsec spi 1000 esp
aes-cbc 1234567890ABCDEF1234567890ABCDEF sha1
1234567890ABCDEF1234567890ABCDEF12345678
```

To disable ESP encryption for OPSPF area 1, use the commands:

```
awplus# configure terminal
awplus(config)# router ipv6 ospf
awplus(config-router)# no area 1 encryption ipsec spi 1000
```

**Related commands**

area authentication ipsec spi

area virtual-link authentication ipsec spi

area virtual-link encryption ipsec spi

ipv6 ospf authentication spi

ipv6 ospf encryption spi esp

show ipv6 ospf

# area range (IPv6 OSPF)

**Overview** Use this command to summarize OSPFv3 routes at an area boundary, configuring an IPv6 address range which consolidates OSPFv3 routes. By default, this feature is not enabled.

A summary route created by this command is then advertised to other areas by the Area Border Routers (ABRs). In this way, routing information is condensed at area boundaries and outside the area so that routes are exchanged between areas in an efficient manner.

If the network numbers in an area are arranged into sets of contiguous routes, the ABRs can be configured to advertise a summary route that covers all the individual networks within the area that fall into the specified range.

The **no** variant of this command disables this function and restores default behavior.

**Syntax**

```
area <area-id> range <ipv6address/prefix-length>
[advertise|not-advertise]
```

```
no area <area-id> range <ipv6address/prefix-length>
```

| Parameter | Description | |
|---|---|---|
| *<area-id>* | The OSPFv3 area that you summarizing the routes for. Use one of the following formats: This can be entered in either dotted decimal format or normal decimal format. | |
| | *<A.B.C.D>* | OSPF area-ID expressed in IPv4 address format A.B.C.D. |
| | *<0-4294967295>* | OSPF area-ID expressed as a decimal number within the range shown. |
| | For example the values 0.0.1.2 and decimal 258 would both define the same area-ID. | |
| *<ip-addr/prefix-length>* | The IPv6 address uses the format X:X::X:X/Prefix-Length. The prefix-length is usually set between 0 and 64. | |
| `advertise` | Advertise this range as a summary route into other areas. | |
| `not-advertise` | Do not advertise this range. | |

**Default** The area range is not configured by default. The area range is advertised if it is configured.

**Mode** Router Configuration

**Usage notes** You can configure multiple ranges on a single area with multiple instances of this command, so OSPFv3 summarizes addresses for different sets of IPv6 address ranges.

Ensure OSPFv3 IPv6 routes exist in the area range for advertisement before using this command.

**Example**

```
awplus# configure terminal
awplus(config)# router ipv6 ospf P2
awplus(config-router)# area 1 range 2000::/3
```

# area stub (IPv6 OSPF)

**Overview** This command defines an OSPF area as a stub area. By default, no stub area is defined.

Use this command when routers in the area do not require learning about external LSAs. You can define the area as a totally stubby area by configuring the Area Border Router of that area using the **area stub no-summary** command.

The **no** variant of this command removes this definition.

**Syntax**

```
area <area-id> stub [no-summary]
no area <area-id> stub [no-summary]
```

| Parameter | Description | |
|---|---|---|
| *<area-id>* | The OSPF area that you are configuring as a stub area. Use one of the following formats: This can be entered in either dotted decimal format or normal decimal format. For example the values dotted decimal 0.0.1.2 and decimal 258 would both define the same area-ID. | |
| | *<A.B.C.D>* | OSPF area-ID, expressed in the IPv4 address format *<A.B.C.D>*. |
| | *<0-4294967295>* | OSPF area-ID expressed as a decimal number within the range shown. |
| | For example the values dotted decimal 0.0.1.2 and decimal 258 would both define the same area-ID. | |
| `no-summary` | Stops an ABR from sending summary link advertisements into the stub area. | |

**Mode** Router Configuration

**Usage** There are two stub area router configuration commands: the **area stub** and **area default- cost** commands. In all routers attached to the stub area, configure the area by using the **area stub** command. For an area border router (ABR) attached to the stub area, also use the **area default-cost** command.

**Example**

```
awplus# configure terminal
awplus(config)# router ipv6 ospf 100
awplus(config-router)# area 100 stub
```

**Related commands** area default-cost (IPv6 OSPF)

# area virtual-link (IPv6 OSPF)

**Overview** This command configures a link between a non-backbone area and the backbone, through other non-backbone areas.

In OSPF, all non-backbone areas must be connected to a backbone area. If the connection to the backbone is lost, the virtual link repairs the connection.

The **no** variant of this command removes the virtual link.

**Syntax**

```
area <area-id> virtual-link <router-id>
no area <area-id>  virtual-link <router-id>
area <area-id>  virtual-link <router-id>
no area <area-id>  virtual-link <router-id>
area <area-id>  virtual-link <router-id> [hello-interval
<1-65535>]  [retransmit-interval <1-65535>] [transmit-delay
<1-65535>]
no area <area-id>  virtual-link <router-id> [hello-interval]
[retransmit-interval] [transmit-delay]
```

| Parameter | Description | |
|---|---|---|
| *<area-id>* | The area-ID of the transit area that the virtual link passes through. This can be entered in either dotted decimal format or normal decimal format as shown below. | |
| | *<A.B.C.D>* | OSPF area-ID, expressed in the IPv4 address format *<A.B.C.D>*. |
| | *<0-4294967295>* | OSPF area-ID expressed as a decimal number within the range shown. |
| | For example the values dotted decimal 0.0.1.2 and decimal 258 would both define the same area-ID. | |
| *<router-id>* | The OSPF router ID of the virtual link neighbor. | |
| dead-interval | If no packets are received from a particular neighbor for dead-interval seconds, the router considers the neighbor router to be off-line.<br>Default: 40 seconds | |
| | *<1-65535>* | The number of seconds in the interval. |
| hello-interval | The interval the router waits before it sends a hello packet.<br>Default: 10 seconds | |
| | *<1-65535>* | The number of seconds in the interval. |
| retransmit-interval | The interval the router waits before it retransmits a packet.<br>Default: 5 seconds | |
| | *<1-65535>* | The number of seconds in the interval. |

| Parameter | Description | |
|---|---|---|
| `transmit-delay` | The interval the router waits before it transmits a packet. Default: 1 seconds | |
| | *<1-65535>* | The number of seconds in the interval. |

**Mode** Router Configuration

**Usage** You can configure virtual links between any two backbone routers that have an interface to a common non-backbone area. The protocol treats these two routers, joined by a virtual link, as if they were connected by an unnumbered point-to-point network. To configure a virtual link, you require:

- The transit area-ID, i.e. the area-ID of the non-backbone area that the two backbone routers are both connected to.
- The corresponding virtual link neighbor's router ID. To see the router ID use the show ipv6 ospf command.

Configure the **hello-interval** to be the same for all routers attached to a common network. A short **hello-interval** results in the router detecting topological changes faster but also an increase in the routing traffic.

The **retransmit-interval** is the expected round-trip delay between any two routers in a network. Set the value to be greater than the expected round-trip delay to avoid needless retransmissions.

The **transmit-delay** is the time taken to transmit a link state update packet on the interface. Before transmission, the link state advertisements in the update packet, are incremented by this amount. Set the **transmit-delay** to be greater than zero. Also, take into account the transmission and propagation delays for the interface.

**Example** To configure a virtual link through area 1to the router with router-ID 10.10.11.50, use the following commands:

```
awplus# configure terminal
awplus(config)# router ipv6 ospf 100
awplus(config-router)# area 1 virtual-link 10.10.11.50 hello 5
dead 10
```

**Related commands** show ipv6 ospf

# area virtual-link authentication ipsec spi

**Overview** Use this command in Router Configuration mode to enable authentication for virtual links in a specified OSPF area.

Use the **no** variant of this command in Router Configuration mode to disable authentication for virtual links in a specified OSPF area.

**Syntax**

```
area <area-id> virtual-link <router-ID> authentication ipsec
spi <256-4294967295> {md5 <MD5-key>|sha1 <SHA1-key>}
```

```
no area <area-id> virtual-link <router-ID> authentication ipsec
spi <256-4294967295>
```

| Parameter | Description | |
|---|---|---|
| *<area-id>* | The OSPF area that you are specifying the summary route default-cost for. This can be entered in either dotted decimal format or normal decimal format. Use one of the following formats: | |
| | *<ip-addr>* | OSPF area-ID expressed in IPv4 address format A.B.C.D. |
| | *<0-4294967295>* | OSPF area-ID expressed as a decimal number within the range shown. |
| | For example, the values 0.0.1.2 and decimal 258 would both define the same area-ID. | |
| `virtual-link` | Specify a virtual link and its parameters. | |
| *<router-ID>* | Enter a router ID associated with a virtual link neighbor in IPv4 address format A.B.C.D. | |
| `authentication` | Specify this keyword to enable authentication. | |
| `ipsec` | Specify this keyword to use IPsec authentication. | |
| `spi` | Specify this keyword to set the SPI (Security Parameters Index). | |
| *<256-4294967295>* | Specify an SPI (Security Parameters Index) value in the range 256 to 4294967295, entered as a decimal integer. | |
| `md5` | Specify the MD5 (Message-Digest 5) encryption algorithm. | |
| *<MD5-key>* | Enter an MD5 key containing 32 hexadecimal characters. | |
| `sha1` | Specify the SHA-1 (Secure Hash Algorithm 1) encryption algorithm. | |
| *<SHA1-key>* | Enter an SHA-1 key containing 40 hexadecimal characters. | |

**Mode** Router Configuration

**Usage notes** Use this command on an OSPFv3 area virtual link, use the area authentication ipsec spi command on an OSPFv3 area. Configure the same SPI (Security Parameters Index) value on all interfaces that connect to the same link. SPI values are used by

link interfaces. Use a different SPI value for a different link interface when using OSPFv3 with link interfaces.

OSPFv3 areas are connected to a backbone area. Virtual links can be configured to repair lost connections to a backbone area for OSPFv3 areas. To configure an OSPFv3 virtual link, use a router ID instead of the IPv6 prefix of the router.

Use the **sha1** keyword to choose SHA-1 authentication instead of entering the **md5** keyword to use MD5 authentication. The SHA-1 algorithm is more secure than the MD5 algorithm. SHA-1 uses a 40 hexadecimal character key instead of a 32 hexadecimal character key as used for MD5 authentication.

See the OSPFv3 Feature Overview and Configuration Guide for more information and examples.

**Example**

To enable MD5 authentication with a 32 hexadecimal character key for virtual links in OPSPF area 1, use the commands:

```
awplus# configure terminal
awplus(config)# router ipv6 ospf
awplus(config-router)# area 1 virtual-link 10.0.0.1
authentication ipsec spi 1000 md5
1234567890ABCDEF1234567890ABCDEF
```

To enable SHA-1 authentication with a 40 hexadecimal character key for virtual links in OPSPF area 1, use the commands:

```
awplus# configure terminal
awplus(config)# router ipv6 ospf
awplus(config-router)# area 1 virtual-link 10.0.0.1
authentication ipsec spi 1000 sha1
1234567890ABCDEF1234567890ABCDEF12345678
```

To disable authentication for virtual links in OPSPF area 1, use the commands:

```
awplus# configure terminal
awplus(config)# router ipv6 ospf
awplus(config-router)# no area 1 virtual-link ipsec spi 1000
```

**Related commands**

area authentication ipsec spi

area encryption ipsec spi esp

area virtual-link encryption ipsec spi

show ipv6 ospf virtual-links

# area virtual-link encryption ipsec spi

**Overview** Use this command in Router Configuration mode to enable either AES-CBC (Advanced Encryption Standard-Cipher Block Chaining) or 3DES (Triple Data Encryption Standard) ESP (Encapsulating Security Payload) encryption for virtual links in a specified OSPF area.

Use the **no** variant of this command in Router Configuration mode to disable encryption configured for virtual links in a specified OSPF area.

**Syntax**

```
area <area-id> virtual-link <router-ID> encryption ipsec spi
<256-4294967295> esp {aes-cbc <AES-CBC-key>|3des
<3DES-key>|null}{md5 <MD5-key>|sha1 <SHA1-key>}
```

```
no area <area-id> encryption ipsec spi <256-4294967295>
```

| Parameter | Description | |
|---|---|---|
| *<area-id>* | The OSPF area that you are specifying the summary route default- cost for. This can be entered in either dotted decimal format or normal decimal format. Use one of the following formats: | |
| | *<ip-addr>* | OSPF area-ID expressed in IPv4 address format A.B.C.D. |
| | *<0-4294967295>* | OSPF area-ID expressed as a decimal number within the range shown. |
| | For example, the values 0.0.1.2 and decimal 258 would both define the same area-ID. | |
| `virtual-link` | Specify a virtual link and its parameters. | |
| *<router-ID>* | Enter a router ID associated with a virtual link neighbor in IPv4 address format A.B.C.D. | |
| `encryption` | Specify this keyword to enable encryption. | |
| `ipsec` | Specify this keyword to use IPsec authentication. | |
| `spi` | Specify this keyword to set the SPI (Security Parameters Index). | |
| *<256-4294967295>* | Specify an SPI (Security Parameters Index) value in the range 256 to 4294967295, entered as a decimal integer. | |
| `esp` | Specify the esp keyword (Encapsulating Security Payload) to then apply either AES-CBC or 3DES encryption. | |
| `aes-cbc` | Specify this keyword to enable AES-CBC (Advanced Encryption Standard-Cipher Block Chaining) encryption. | |
| *<AES-CBC-key>* | Enter an AES-CBC key containing either 32, 48, or 64 hexadecimal characters. | |
| `3des` | Specify 3DES (Triple Data Encryption Standard) encryption. | |
| *<3DES-key>* | Enter a 3DES key containing 48 hexadecimal characters. | |

| Parameter | Description |
|---|---|
| `null` | Specify ESP without AES-CBC or 3DES encryption applied. |
| `md5` | Specify the MD5 (Message-Digest 5) encryption algorithm. |
| *<MD5-key>* | Enter an MD5 key containing 32 hexadecimal characters. |
| `sha1` | Specify the SHA-1 (Secure Hash Algorithm 1) encryption algorithm. |
| *<SHA1-key>* | Enter an SHA-1 key containing 40 hexadecimal characters. |

**Mode** Router Configuration

**Usage notes** When you issue this command, authentication and encryption are both enabled.

Use this command on an OSPFv3 area virtual link, use the area encryption ipsec spi esp command on an OSPFv3 area. Configure the same SPI (Security Parameters Index) value on all interfaces that connect to the same link. SPI values are used by link interfaces. Use a different SPI value for a different link interface when using OSPFv3 with link interfaces.

Security is achieved using the IPv6 ESP extension header. ESP is used to provide confidentiality, integrity, authentication, and confidentiality. Authentication fields are removed from OSPF for IPv6 packet headers. The IPv6 ESP extension header is required for integrity, authentication, and confidentiality.

Note that interface configuration takes priority over area configuration. If an interface configuration is removed then an area configuration is applied to an interface instead.

Use the **sha1** keyword to choose SHA-1 authentication instead of entering the **md5** keyword to use MD5 authentication. The SHA-1 algorithm is more secure than the MD5 algorithm. SHA-1 uses a 40 hexadecimal character key instead of a 32 hexadecimal character key as used for MD5 authentication.

See the OSPFv3 Feature Overview and Configuration Guide for more information and examples.

**Example** To enable ESP encryption, but not apply an AES-CBC key or a 3DES key, and MD5 authentication with a 32 hexadecimal character key for virtual links in OPSPF area 1, use the commands:

```
awplus# configure terminal
awplus(config)# router ipv6 ospf
awplus(config-router)# area 1 virtual-link 10.0.0.1 encryption
ipsec spi 1000 esp null md5 1234567890ABCDEF1234567890ABCDEF
```

To enable ESP encryption, but not apply an AES-CBC key or a 3DES key, and SHA-1 authentication with a 40 hexadecimal character key for virtual links in OPSPF area 1, use the commands:

```
awplus# configure terminal
awplus(config)# router ipv6 ospf
awplus(config-router)# area 1 virtual-link 10.0.0.1 encryption
ipsec spi 1000 esp null sha1
1234567890ABCDEF1234567890ABCDEF12345678
```

To enable ESP encryption with a 32 hexadecimal character AES-CBC key and a 40 hexadecimal character SHA-1 authentication key for virtual links in OPSPF area 1, use the commands:

```
awplus# configure terminal
awplus(config)# router ipv6 ospf
awplus(config-router)# area 1 virtual-link 10.0.0.1 encryption
ipsec spi 1000 esp aes-cbc 1234567890ABCDEF1234567890ABCDEF
sha1 1234567890ABCDEF1234567890ABCDEF12345678
```

To enable ESP encryption with a 48 hexadecimal character 3DES key and a 40 hexadecimal character SHA-1 authentication key for virtual links in OPSPF area 1, use the commands:

```
awplus# configure terminal
awplus(config)# router ipv6 ospf
awplus(config-router)# area 1 virtual-link 10.0.0.1 encryption
ipsec spi 1000 esp 3des
1234567890ABCDEF1234567890ABCDEF1234567890ABCDEF sha1
1234567890ABCDEF1234567890ABCDEF12345678
```

To disable authentication for virtual links in OPSPF area 1, use the commands:

```
awplus# configure terminal
awplus(config)# router ipv6 ospf
awplus(config-router)# no area 1 virtual-link 10.0.0.1
authentication ipsec spi 1000
```

**Related commands**

area authentication ipsec spi

area encryption ipsec spi esp

area virtual-link authentication ipsec spi

show ipv6 ospf virtual-links

# auto-cost reference bandwidth (IPv6 OSPF)

**Overview**

This command controls how OSPF calculates default metrics for the interface.

Use the **no** variant of this command to assign cost based only on the interface bandwidth.

**Syntax**

```
auto-cost reference-bandwidth <1-4294967>
no auto-cost reference-bandwidth
```

| Parameter | Description |
|---|---|
| *<1-4294967>* | The reference bandwidth, measured in Mbits per second (Mbps). |

**Default**

1000 Mbps

**Usage notes**

By default, OSPF calculates the OSPF metric for an interface by dividing the reference bandwidth by the interface bandwidth. The default for the reference bandwidth is 1000 Mbps. As a result, if this default is used, there is very little difference between the metrics applied to interfaces of increasing bandwidth beyond 1000 Mbps.

The auto-cost command is used to alter this reference bandwidth in order to give a real difference between the metrics of high bandwidth links of differing bandwidths. In a network that has multiple links with high bandwidths, specify a larger reference bandwidth value to differentiate the costs on those links.

Cost is calculated by dividing the reference bandwidth (Mbps) by the layer 3 interface (Switched Virtual Interface (SVI), Loopback or Ethernet interface) bandwidth. Interface bandwidth may be altered by using the bandwidth command as the SVI does not auto-detect the bandwidth based on the speed of associated device ports.

When the reference bandwidth calculation results in a cost integer greater than 1 but contains a fractional value (the value after the decimal point), the result rounds down to the nearest integer. The following example shows how the cost is calculated.

The reference bandwidth is 1000 Mbps and the interface bandwidth is 7 Mbps.

Calculation = 1000/7

Calculation result = 142.85 (integer of 142, fractional value of 0.85)

Result after rounding down to the nearest integer = 142 (Interface cost is 142)

When the reference bandwidth calculation results in a cost less than 1, it is rounded up to the nearest integer which is 1. The following example shows how the cost is calculated.

The reference bandwidth is 1000 Mbps and the interface bandwidth is 10000 Mbps.

Calculation = 1000/10000

Calculation result = 0.1

Result after rounding up to the nearest integer = 1 (Interface cost is 1)

The auto-cost reference bandwidth value should be consistent across all OSPF routers in the OSPF process.

Note that using the ipv6 ospf cost command on a layer 3 interface will override the cost calculated by this command.

**Mode** Router Configuration

**Example**

```
awplus# configure terminal
awplus(config)# router ipv6 ospf 20
awplus(config-router)# auto-cost reference-bandwidth 1000
```

**Related commands** ipv6 ospf cost

# bandwidth

**Overview** Use this command to specify the maximum bandwidth to be used for each VLAN interface. The bandwidth value is in bits per second. OSPF uses this to calculate metrics for the VLAN interface.

The **no** variant of this command removes any applied bandwidth value and replaces it with a value equal to the lowest port speed within that VLAN.

**Syntax**

```
bandwidth <bandwidth-setting>
no bandwidth
```

| Parameter | Description |
|---|---|
| *<bandwidth-setting>* | Sets the bandwidth for the interface. Enter a value in the range 1 to 10000000000 bits per second. Note that to avoid entering many zeros, you can add k, m, or g to internally add 3, 6 or 9 zeros to the number entered. For example entering 1k is the same as entering 1000. |

**Mode** Interface Configuration for a VLAN interface.

**Example** To set the bandwidth on VLAN2 to be 1 Mbps, use the following commands:

```
awplus# configure terminal
awplus(config)# interface vlan2
awplus(config-if)# bandwidth 1000000
```

Or

```
awplus(config-if)# bandwidth 1m
```

**Related commands** show interface

# clear ipv6 ospf process

**Overview** This command clears and restarts the IPv6 OSPF routing process. Specify the Process ID to clear one particular OSPF process. When no Process ID is specified, this command clears all running OSPF processes.

**Syntax**

```
clear ipv6 ospf [<0-65535>] process
```

| Parameter | Description |
|---|---|
| *<0-65535>* | The routing process ID. |

**Mode** Privileged Exec

**Example**

```
awplus# clear ipv6 ospf process
```

# debug ipv6 ospf events

**Overview** This command enables IPv6 OSPF debugging for event troubleshooting.

To enable all debugging options, specify **debug ipv6 ospf event** with no additional parameters.

The **no** and **undebug** variants of this command disable OSPF debugging. Using this command with no parameters entered, will disable debugging for all parameter options.

**Syntax**

```
debug ipv6 ospf events [abr] [asbr] [os][router] [vlink]
no debug ipv6 ospf events [abr] [asbr] [os] [router] [vlink]
```

| Parameter | Description |
|---|---|
| abr | Shows ABR events. |
| asbr | Shows ASBR events. |
| router | Shows other router events. |
| os | Shows OS events. |
| vlink | Shows virtual link events. |

**Mode** Privileged Exec and Global Configuration

**Example** To enable IPv6 event debugging and show ABR events, use the following command:

```
awplus# debug ipv6 ospf events asbr
```

# debug ipv6 ospf ifsm

**Overview** This command specifies debugging options for IPv6 OSPF Interface Finite State Machine (IFSM) troubleshooting.

To enable all debugging options, specify **debug ipv6 ospf ifsm** with no additional parameters.

The **no** and **undebug** variants of this command disable IPv6 OSPF IFSM debugging. Use these commands without parameters to disable all the options.

**Syntax**

```
debug ipv6 ospf ifsm [events] [status] [timers]
no debug ipv6 ospf ifsm [events] [status] [timers]
```

| Parameter | Description |
|---|---|
| `events` | Displays IFSM event information. |
| `status` | Displays IFSM status information. |
| `timers` | Displays IFSM timer information. |

**Mode** Privileged Exec and Global Configuration

**Example** To specify IPv6 OSPF debugging options to display IPv6 OSPF IFSM events information, use the following commands:

```
awplus# debug ipv6 ospf ifsm events
```

**Related commands**

terminal monitor

undebug ipv6 ospf ifsm

# debug ipv6 ospf lsa

**Overview**

This command enables debugging options for IPv6 OSPF Link State Advertisements (LSA) troubleshooting. This displays information related to internal operations of LSAs.

To enable all debugging options, specify **debug ipv6 ospf lsa** with no additional parameters.

The **no** and **undebug** variants of this command disable IPv6 OSPF LSA debugging. Use this command without parameters to disable all the options.

**Syntax**

```
debug ipv6 ospf lsa [flooding] [generate] [install] [maxage] [refresh]
```

```
no debug ipv6 ospf lsa [flooding] [generate] [install] [maxage] [refresh]
```

| Parameter | Description |
|---|---|
| `flooding` | Displays LSA flooding. |
| `generate` | Displays LSA generation. |
| `install` | Show LSA installation. |
| `maxage` | Shows maximum age of the LSA in seconds. |
| `refresh` | Displays LSA refresh. |

**Mode**

Privileged Exec and Global Configuration

**Examples**

To enable debugging for IPv6 OSPF refresh LSA, use the following commands:

```
awplus# debug ipv6 ospf lsa refresh
```

**Related commands**

terminal monitor

undebug ipv6 ospf lsa

# debug ipv6 ospf nfsm

**Overview**

This command enables debugging options for IPv6 OSPF Neighbor Finite State Machines (NFSMs).

To enable all debugging options, specify **debug ipv6 ospf nfsm** with no additional parameters.

The **no** and **undebug** variants of this command disable IPv6 OSPF NFSM debugging. Use this command without parameters to disable all the options.

**Syntax**

```
debug ipv6 ospf nfsm [events] [status] [timers]
no debug ipv6 ospf nfsm [events] [status] [timers]
```

| Parameter | Description |
|---|---|
| `events` | Displays NFSM event information. |
| `status` | Displays NSFM status information. |
| `timers` | Displays NFSM timer information. |

**Mode**

Privileged Exec and Global Configuration

**Examples**

To enable IPv6 debugging option to display timer information, use the following command:

```
awplus# debug ipv6 ospf nfsm timers
```

**Related commands**

terminal monitor

undebug ipv6 ospf nfsm

# debug ipv6 ospf packet

**Overview** This command enables debugging options for IPv6 OSPF packets.

To enable all debugging options, specify **debug ipv6 ospf packet** with no additional parameters.

The **no** and **undebug** variants of this command disable IPv6 OSPF packet debugging. Use this command without parameters to disable all options.

**Syntax**

```
debug ipv6 ospf packet [dd] [detail] [hello] [ls-ack]
[ls-request] [ls-update] [recv] [send]
```

```
no debug ipv6 ospf packet [dd] [detail] [hello] [ls-ack]
[ls-request] [ls-update] [recv] [send]
```

| Parameter | Description |
|---|---|
| dd | Specifies debugging for IPv6 OSPF database descriptions. |
| detail | Sets the debug option to detailed information. |
| hello | Specifies debugging for IPv6 OSPF hello packets. |
| ls-ack | Specifies debugging for IPv6 OSPF link state acknowledgments. |
| ls-request | Specifies debugging for IPv6 OSPF link state requests. |
| ls-update | Specifies debugging for IPv6 OSPF link state updates. |
| recv | Specifies the debug option set for received packets. |
| send | Specifies the debug option set for sent packets. |

**Mode** Privileged Exec and Global Configuration

**Examples** To enable debugging for hello packets, use the following command:

```
awplus# debug ipv6 ospf packet hello
```

**Related commands**

terminal monitor

undebug ipv6 ospf packet

# debug ipv6 ospf route

**Overview**

This command enables debugging of route calculation. Use this command without parameters to turn on all the options.

The **no** and **undebug** variants of this command disable IPv6 OSPF route debugging. Use this command without parameters to disable all options.

**Syntax**

```
debug ipv6 ospf route [ase] [ia] [install] [spf]
no debug ipv6 ospf route [ase] [ia] [install] [spf]
```

| Parameter | Description |
|---|---|
| `ase` | Specifies the debugging of external route calculation. |
| `ia` | Specifies the debugging of inter-area route calculation. |
| `install` | Specifies the debugging of route installation. |
| `spf` | Specifies the debugging of SPF calculation. |

**Mode**

Privileged Exec and Global Configuration

**Examples**

To enable IPv6 route debugging of inter-area route calculations, use the following command:

```
awplus# debug ipv6 ospf route ia
```

**Related commands**

terminal monitor

undebug ipv6 ospf route

# default-information originate

**Overview** This command creates a default external route into an OSPF routing domain.

When you use the **default-information originate** command to redistribute routes into an OSPF routing domain, then the system acts like an Autonomous System Boundary Router (ASBR). By default, an ASBR does not generate a default route into the OSPF routing domain.

When using this command, also specify the **route-map** <*route-map*> option to avoid a dependency on the default network in the routing table.

The **metric-type** is an external link type associated with the default route advertised into the OSPF routing domain. The value of the external route could be either Type 1 or 2. The default is Type 2.

The **no** variant of this command disables this feature.

**Syntax**

```
default-information originate [always] [metric <metric>]
[metric-type <1-2>] [route-map <route-map>]
```

```
no default-information originate [always] [metric]
[metric-type] [route-map]
```

| Parameter | Description |
|---|---|
| `always` | Used to advertise the default route regardless of whether there is a default route. |
| *<metric>* | The metric value used in creating the default route. Enter a value in the range 0 to 16777214.<br>The default metric value is 10. The value used is specific to the protocol. |
| *<1-2>* | External metric type for default routes, either OSPF External Type 1 or Type 2 metrics. Enter the value 1 or 2. |
| `route-map` | Specifies to use a specific route-map. |
| *<route-map>* | The route-map name. It is a string comprised of any characters, numbers or symbols. |

**Mode** Router Configuration

**Example**

```
awplus# configure terminal
awplus(config)# router ospf 100
awplus(config-router)# default-information originate always
metric 23 metric-type 2 route-map myinfo
```

**Related commands** route-map

# default-metric (IPv6 OSPF)

**Overview**

This command sets default metric value for routes redistributed into the IPv6 OSPF routing protocol.

The **no** variant of this command returns IPv6 OSPF to using built-in, automatic metric translations, as appropriate for each routing protocol.

**Syntax**

```
default-metric <0-16777214>
no default-metric [<0-16777214>]
```

| Parameter | Description |
|---|---|
| *<1-16777214>* | Default metric value appropriate for the specified routing protocol. |

**Mode**

Router Configuration

**Usage notes**

A default metric facilitates redistributing routes even with incompatible metrics. If the metrics do not convert, the default metric provides an alternative and enables the redistribution to continue. The effect of this command is that IPv6 OSPF will use the same metric value for **all** redistributed routes. Use this command in conjunction with the redistribute (IPv6 OSPF) command.

**Examples**

```
awplus# configure terminal
awplus(config)# router ipv6 ospf 100
awplus(config-router)# default-metric 100
awplus# configure terminal
awplus(config)# router ipv6 ospf 100
awplus(config-router)# no default-metric
```

**Related commands**

redistribute (IPv6 OSPF)

# distance (IPv6 OSPF)

**Overview**

This command sets the administrative distance for OSPFv3 routes based on the route type. Your device uses this value to select between two or more routes to the same destination from two different routing protocols. The route with the smallest administrative distance value is added to the Forwarding Information Base (FIB). See the OSPFv3 Feature Overview and Configuration Guide for more information.

Use the command **distance ospfv3** to set the distance for an entire category of OSPFv3 routes, rather than the specific routes that pass an access list.

Use the command **distance <1-254>**, with no other parameter, to set the same distance for all OSPFv3 route types.

The **no** variant of this command sets the administrative distance for OSPFv3 routes to the default of 110.

**Syntax**

```
distance <1-254>
distance ospfv3 {external <1-254>|inter-area <1-254>|intra-area
<1-254>}
no distance {ospfv3|<1-254>}
```

| Parameter | Description |
|---|---|
| *<1-254>* | Specify the Administrative Distance value for OSPFv3 routes. |
| `external` | Sets the distance for routes from other routing domains, learned by redistribution.<br>Specify an OSPFv3 external distance in the range *<1-254>*. |
| `inter-area` | Sets the distance for all routes from one area to another area.<br>Specify an OSPFv3 inter-area distance in the range*<1-254>*. |
| `intra-area` | Sets the distance for all routes within an area.<br>Specify an OSPFv3 intra-area distance in the range *<1-254>*. |

**Default**

The default OSPFv3 administrative distance is 110. The default Administrative Distance for each type of route (intra, inter, or external) is 110.

**Mode**

Router Configuration

**Usage notes**

The administrative distance rates the trustworthiness of a routing information source. The distance could be any integer from 0 to 254. A higher distance value indicates a lower trust rating. For example, an administrative distance of 254 indicates that the routing information source cannot be trusted and should be ignored.

Use this command to set the distance for an entire group of routes, rather than a specific route that passes an access list.

**Examples**

To set the following administrative distances for route types in OSPF 100:

- 20 for inter-area routes

- 10 for intra-area routes
- 40 for external routes

use the commands:

```
awplus(config)# router ipv6 ospf 100
awplus(config-router)# distance ospfv3 inter-area 20 intra-area
10 external 40
```

To set the administrative distance for all routes in OSPFv3 100 back to the default of 110, use the commands:

```
awplus(config)# router ipv6 ospf 100
awplus(config-router)# no distance ospfv3
```

# ipv6 ospf authentication spi

**Overview** Use this command in Interface Configuration mode to enable either MD5 (Message-Digest 5) or SHA1 (Secure Hash Algorithm 1) authentication for a specified interface.

Use the **no** variant of this command in Interface Configuration mode to disable the authentication configured for a specified interface.

**Syntax**

```
ipv6 ospf authentication ipsec spi <256-4294967295> {md5
<MD5-key>|sha1 <SHA1-key>}
ipv6 ospf authentication null
no ipv6 ospf authentication ipsec spi <256-4294967295>
```

| Parameter | Description |
|---|---|
| `authentication` | Specify this keyword to enable authentication. |
| `ipsec` | Specify this keyword to use IPsec authentication. |
| `spi` | Specify this keyword to set the SPI (Security Parameters Index). |
| *<256-4294967295>* | Specify an SPI (Security Parameters Index) value in the range 256 to 4294967295, entered as a decimal integer. |
| `md5` | Specify the MD5 (Message-Digest 5) hashing algorithm. |
| *<MD5-key>* | Enter an MD5 key containing up to 32 hexadecimal characters. |
| `sha1` | Specify the SHA-1 (Secure Hash Algorithm 1) hashing algorithm. |
| *<SHA1-key>* | Enter an SHA-1 key containing up to 40 hexadecimal characters. |
| `null` | Specify no authentication is applied when no other parameters are applied after this keyword (`ipv6 ospf authentication null`). Note this overrides any existing area authentication configured. |

**Mode** Interface Configuration

**Default** Authentication is not configured on an interface by default.

**Usage notes** Configure the same SPI (Security Parameters Index) value on all interfaces that connect to the same link. SPI values are used by link interfaces. Use a different SPI value for a different link interface when using OSPFv3 with link interfaces.

Use the **sha1** keyword to choose SHA-1 authentication instead of entering the **md5** keyword to use MD5 authentication. The SHA-1 algorithm is more secure than the MD5 algorithm. SHA-1 uses a 40 hexadecimal character key instead of a 32 hexadecimal character key as used for MD5 authentication.

Use the **null** keyword to override existing area authentication. Apply the **null** keyword if area authentication is already configured to configure authentication on an interface.

See the OSPFv3 Feature Overview and Configuration Guide for more information and examples.

***NOTE:*** *You can configure an authentication security policy (SPI) on a VLAN interface with this command, or an OSPFv3 area with the area authentication ipsec spi command.*

*When you configure authentication for an area, the security policy is applied to all VLAN interfaces in the area. Allied Telesis recommends a different authentication security policy is applied to each interface for higher security.*

*If you apply the **ipv6 ospf authentication null** command, this affects authentication configured on both the VLAN interface and the OSPFv3 area.*

*This is due to OSPFv3 hello messages ingressing VLAN interfaces, which are part of area authentication, not being authenticated. So neighbors time out.*

**Example**

To enable MD5 authentication with a 32 hexadecimal character key for interface VLAN 2, use the commands:

```
awplus# configure terminal
awplus(config)# interface vlan2
awplus(config-if)# area 1 authentication ipsec spi 1000 md5
1234567890ABCDEF1234567890ABCDEF
```

To enable SHA-1 authentication with a 40 hexadecimal character key for interface VLAN 2, use the commands:

```
awplus# configure terminal
awplus(config)# interface vlan2
awplus(config-if)# ipv6 ospf authentication ipsec spi 1000 sha1
1234567890ABCDEF1234567890ABCDEF12345678
```

To specify no authentication is applied to interface VLAN 2, use the commands:

```
awplus# configure terminal
awplus(config)# interface vlan2
awplus(config-if)# ipv6 ospf authentication null
```

To disable authentication for interface VLAN 2, use the commands:

```
awplus# configure terminal
awplus(config)# interface vlan2
awplus(config-if)# no ipv6 ospf authentication ipsec spi 1000
```

**Related commands**

area authentication ipsec spi

area encryption ipsec spi esp

ipv6 ospf encryption spi esp

show ipv6 ospf interface

# ipv6 ospf cost

**Overview** This command explicitly specifies the cost of the link-state metric in a router-LSA.

The interface cost indicates the overhead required to send packets across a certain VLAN interface. Use this command to set the VLAN interface cost manually.

The **no** variant of this command resets the VLAN interface cost to the default.

**Syntax**

```
ipv6 ospf cost <1-65535>
no ipv6 ospf cost
```

| Parameter | Description |
|---|---|
| *<1-65535>* | The link-state metric. |

**Default** By default there is no static value set and the OSPF cost is automatically calculated by using the command auto-cost reference bandwidth (IPv6 OSPF).

**Mode** Interface Configuration for a VLAN interface or Interface Configuration for a PPP interface.

**Usage notes** This command explicitly sets a user specified cost of sending packets out the interface. Using this command overrides the cost value calculated automatically with the auto-cost reference bandwidth (IPv6 OSPF) feature.

The link-state metric cost is stated in the Router-LSA's link. Typically, the cost is inversely proportional to the bandwidth of an interface. By default, the cost of a VLAN interface is calculated according to the following formula:

reference bandwidth / interface bandwidth

The reference bandwidth is set by default at 1000000 kbps (or 1000 Mbps), but can be changed by the command auto-cost reference bandwidth (IPv6 OSPF).

The interface bandwidth is set by default to 1000000 kbps (or 1000 Mbps), but can be changed by the bandwidth command.

**Example** To set the IPv6 OSPF cost to 10 on the VLAN interface `vlan25`, use the following commands:

```
awplus# configure terminal
awplus(config)# interface vlan25
awplus(config-if)# ipv6 ospf cost 10
```

To set the IPv6 OSPF cost to 10 on the PPP interface `ppp0`, use the following commands:

```
awplus# configure terminal
awplus(config)# interface ppp0
awplus(config-if)# ipv6 ospf cost 10
```

**Related commands**

show ipv6 ospf interface

auto-cost reference bandwidth (IPv6 OSPF)

bandwidth

# ipv6 ospf dead-interval

**Overview**

This command sets the interval during which no hello packets are received and after which a neighbor is declared dead.

The dead-interval is the amount of time that OSPF waits to receive an OSPF hello packet from the neighbor before declaring the neighbor is down. This value is advertised in the router's hello packets. It must be a multiple of the hello-interval and be the same for all routers on a specific network.

The **no** variant of this command returns the interval to the default of 40 seconds.

**Syntax**

```
ipv6 ospf dead-interval <1-65535> [<inst-id>]
no ipv6 ospf  dead-interval
```

| Parameter | Description |
|---|---|
| *<1-65535>* | The interval in seconds.<br>Default: 40 |
| *<inst-id>* | The instance ID<br>Default: 0 |

**Mode**

Interface Configuration for a VLAN interface or Interface Configuration for a PPP interface.

**Example**

The following example shows configuring the dead-interval to 10 seconds on the VLAN interface vlan2:

```
awplus# configure terminal
awplus(config)# interface vlan2
awplus(config-if)# ipv6 ospf dead-interval 10
```

The following example shows configuring the dead-interval to 10 seconds on the PPP interface ppp0:

```
awplus# configure terminal
awplus(config)# interface ppp0
awplus(config-if)# ipv6 ospf dead-interval 10
```

**Related commands**

ipv6 ospf hello-interval

show ipv6 ospf interface

# ipv6 ospf display route single-line

**Overview** Use this command to change the result of the **show ipv6 route** command to display each route entry on a single line.

**Syntax**

```
ipv6 ospf display route single-line
no ipv6 ospf display route single-line
```

**Mode** Global Configuration

**Example** To display each route entry on a single line.

```
awplus# configure terminal
awplus(config)# ipv6 ospf display route single-line
```

**Related commands** show ipv6 ospf route

# ipv6 ospf encryption spi esp

**Overview** Use this command in Interface Configuration mode to enable either AES-CBC (Advanced Encryption Standard-Cipher Block Chaining) or 3DES (Triple Data Encryption Standard) ESP (Encapsulating Security Payload) encryption for a specified interface.

Use the **no** variant of this command in Interface Configuration mode to disable the encryption configured for a specified interface.

**Syntax**

```
ipv6 ospf encryption ipsec spi <256-4294967295> esp {aes-cbc
<AES-CBC-key>|3des <3DES-key>|null}{md5 <MD5-key>|sha1
<SHA1-key>}
```

```
ipv6 ospf encryption null
```

```
no ipv6 ospf encryption ipsec spi <256-4294967295>
```

| Parameter | Description |
|---|---|
| *<256-4294967295>* | Specify an SPI (Security Parameters Index) value in the range 256 to 4294967295, entered as a decimal integer. |
| `esp` | Specify the esp keyword (Encapsulating Security Payload) to then apply either AES-CBC or 3DES encryption. |
| `aes-cbc` | Specify this keyword to enable AES-CBC (Advanced Encryption Standard-Cipher Block Chaining) encryption. |
| *<AES-CBC-key>* | Enter an AES-CBC key containing either 32, 48, or 64 hexadecimal characters. |
| `3des` | Specify 3DES (Triple Data Encryption Standard) encryption. |
| *<3DES-key>* | Enter a 3DES key containing 48 hexadecimal characters. |
| `null` | Specify ESP without AES-CBC or 3DES encryption applied. |
| `md5` | Specify the MD5 (Message-Digest 5) encryption algorithm. |
| *<MD5-key>* | Enter an MD5 key containing 32 hexadecimal characters. |
| `sha1` | Specify the SHA-1 (Secure Hash Algorithm 1) encryption algorithm. |
| *<SHA1-key>* | Enter an SHA-1 key containing 40 hexadecimal characters. |
| `null` | Specify no encryption is applied when no other parameters are applied after this keyword (`ipv6 ospf encryption null`). |

**Default** Authentication is not configured on an interface by default.

**Mode** Interface Configuration

**Usage notes** When you issue this command, authentication and encryption are both enabled. Configure the same SPI (Security Parameters Index) value on all interfaces that connect to the same link. SPI values are used by link interfaces. Use a different SPI value for a different link interface when using OSPFv3 with link interfaces.

Security is achieved using the IPv6 ESP extension header. The IPv6 ESP extension header is used to provide confidentiality, integrity, authentication, and confidentiality. Authentication fields are removed from OSPF for IPv6 packet headers, so applying IPv6 ESP extension headers are required for integrity, authentication, and confidentiality.

Use the **null** keyword to override existing area encryption. Apply the **null** keyword if area encryption is already configured to then configure encryption on an interface instead.

Use the **sha1** keyword to choose SHA-1 authentication instead of entering the **md5** keyword to use MD5 authentication. The SHA-1 algorithm is more secure than the MD5 algorithm. SHA-1 uses a 40 hexadecimal character key instead of a 32 hexadecimal character key as used for MD5 authentication.

See the OSPFv3 Feature Overview and Configuration Guide for more information and examples.

***NOTE:*** *You can configure an encryption security policy (SPI) on a VLAN interface with this command, or an OSPFv3 area with the area encryption ipsec spi esp command.*

*When you configure encryption for an area, the security policy is applied to all VLAN interfaces in the area. Allied Telesis recommends a different encryption security policy is applied for each interface for higher security.*

*If you apply the **ipv6 ospf encryption null** command this affects encryption configured on both the VLAN interface and the OSPFv3 area.*

*This is due to OSPFv3 hello messages ingressing VLAN interfaces, which are part of area encryption, not being encrypted. So neighbors time out.*

**Example** To enable ESP encryption, but not apply an AES-CBC key or a 3DES key, for interface VLAN 2 and MD5 authentication with a 32 hexadecimal character key, use the commands:

```
awplus# configure terminal
awplus(config)# interface vlan2
awplus(config-if)# ipv6 ospf encryption ipsec spi 1000 esp null
md5 1234567890ABCDEF1234567890ABCDEF
```

To enable ESP encryption, but not apply an AES-CBC key or a 3DES key, for interface VLAN 2 and SHA-1 authentication with a 40 hexadecimal character key, use the commands:

```
awplus# configure terminal
awplus(config)# interface vlan2
awplus(config-if)# ipv6 ospf encryption ipsec spi 1000 esp null
sha1 1234567890ABCDEF1234567890ABCDEF12345678
```

To enable ESP encryption with an 3DES key with a 48 hexadecimal character key and MD5 authentication with a 32 hexadecimal character key for interface VLAN 2, use the commands:

```
awplus# configure terminal
awplus(config)# interface vlan2
awplus(config-if)# ipv6 ospf encryption ipsec spi 1000 esp 3des
1234567890ABCDEF1234567890ABCDEF1234567890ABCDEF md5
1234567890ABCDEF1234567890ABCDEF
```

To enable ESP encryption with an AES-CBC key with a 32 hexadecimal character key and SHA-1 authentication with a 40 hexadecimal character key for interface VLAN 2, use the commands:

```
awplus# configure terminal
awplus(config)# interface vlan2
awplus(config-if)# ipv6 ospf encryption ipsec spi 1000 esp
aes-cbc 1234567890ABCDEF1234567890ABCDEF sha1
1234567890ABCDEF1234567890ABCDEF12345678
```

To specify no ESP encryption is applied to interface VLAN 2, use the commands:

```
awplus# configure terminal
awplus(config)# interface vlan2
awplus(config-if)# ipv6 ospf encryption null
```

To disable ESP encryption for interface VLAN 2, use the commands:

```
awplus# configure terminal
awplus(config)# interface vlan2
awplus(config-if)# no ipv6 ospf encryption ipsec spi 1000
```

**Related commands**

area authentication ipsec spi

area encryption ipsec spi esp

ipv6 ospf authentication spi

show ipv6 ospf interface

# ipv6 ospf hello-interval

**Overview** This command specifies the interval between hello packets.

The hello-interval is advertised in the hello packets. Configure the same hello-interval for all routers on a specific network. A shorter interval ensures faster detection of topological changes, but results in more routing traffic.

The **no** variant of this command returns the interval to the default of 10 seconds.

**Syntax**

```
ipv6 ospf hello-interval <1-65535>
no ipv6 ospf hello-interval
```

| Parameter | Description |
|---|---|
| *<1-65535>* | The hello-interval in seconds.<br>Default: 10 |

**Default** The default interval is 10 seconds.

**Mode** Interface Configuration for a VLAN interface or Interface Configuration for a PPP interface.

**Example** The following example shows setting the `hello-interval` to 3 seconds on the VLAN interface `vlan2`:

```
awplus# configure terminal
awplus(config)# interface vlan2
awplus(config-if)# ipv6 ospf hello-interval 3
```

The following example shows setting the `hello-interval` to 3 seconds on the PPP interface `ppp0`:

```
awplus# configure terminal
awplus(config)# interface ppp0
awplus(config-if)# ipv6 ospf hello-interval 3
```

**Related commands**

ipv6 ospf dead-interval

show ipv6 ospf interface

# ipv6 ospf neighbor

**Overview** Use this command to configure static OSPFv3 IPv6 neighbors when using the OSPFv3 "non-broadcast" (NBMA) and "point-to-multipoint non-broadcast" (P2MP NBMA) network types. OSPFv3 messages exchanged between the neighbors are unicast only.

Use the **no** variant of this command to remove a configuration.

**Syntax**

```
ipv6 ospf neighbor <ipv6-address>
[<cost>|<instance-id>|<poll-interval>|<priority>]
```

```
no ipv6 ospf neighbor <ipv6-address>
[<cost>|<instacne-id>|<poll-interval>|<priority>]
```

| Parameter | Description |
|---|---|
| `<ipv6-address>` | Specifies the interface IPv6 address of the neighbor. |
| `<cost>` | *cost <1-65535>*<br>OSPF cost for point-to-multipoint neighbor. |
| `<instance-id>` | *instance-id <0-255>*<br>Interface instance ID. |
| `<poll-interval>` | *poll-interval <0-4294967295>*<br>Dead neighbor polling interval in seconds. It is recommended to set this value much higher than the hello interval. The default is 120 seconds. |
| `<priority>` | *priority <0-255>*<br>Specifies the router priority value of the non-broadcast neighbor associated with the specified IP address. The default is 0. This keyword does not apply to point-to-multipoint interfaces. |

**Mode** Interface Configuration

**Usage notes** To configure a neighbor on an NBMA network manually, use the **ipv6 ospf neighbor** command and include one neighbor entry for each known non-broadcast network neighbor. The IPv6 address used in this command is the neighbor's primary IPv6 address on the interface where that neighbor connects to the NBMA network.

The poll interval is the reduced rate at which routers continue to send hello packets, when a neighboring router has become inactive. Set the poll interval to be much larger than hello interval.

You can use this command to configure static OSPFv3 IPv6 neighbors for Layer 3 interfaces, such as Ethernet or tunnel interfaces on routers or a VLAN interface on switches or routers.

**Examples** To configure a neighbor with a priority value, poll interval time, and cost, use the commands:

```
awplus# configure terminal
awplus(config)# interface eth1
awplus(config-if)# ipv6 ospf neighbor fe80::c:20:0:1 priority 1
poll-interval 90
awplus(config-router)# ipv6 ospf neighbor fe80::c:20:0:1 cost
15
```

**Related commands** show ipv6 ospf neighbor

# ipv6 ospf network

**Overview** This command configures the OSPF network type to a type different from the default for the particular VLAN interface.

The **no** variant of this command returns the network type to the default for the particular VLAN interface.

**Syntax**

```
ipv6 ospf network [broadcast | non-broadcast | point-to-point |
point-to-multipoint]
```

```
no ipv6 ospf network
```

| Parameter | Description |
|---|---|
| broadcast | Sets the network type to broadcast. |
| non-broadcast | Sets the network type to NBMA. |
| point-to-multipoint | Sets the network type to point-to-multipoint. |
| point-to-point | Sets the network type to point-to-point. |

**Default** The default is the `broadcast` OSPF network type for a VLAN interface.

**Mode** Interface Configuration for a VLAN interface or Interface Configuration for a PPP interface.

**Usage notes** This command forces the interface network type to the specified type. Depending on the network type, OSPF changes the behavior of the packet transmission and the link description in LSAs.

**Example** The following example shows setting the network type to `point-to-point` on the VLAN interface `vlan1`:

```
awplus# configure terminal
awplus(config)# interface vlan1
awplus(config-if)# ipv6 ospf network point-to-point
```

The following example shows setting the network type to `point-to-point` on the PPP interface `ppp0`:

```
awplus# configure terminal
awplus(config)# interface ppp0
awplus(config-if)# ipv6 ospf network point-to-point
```

# ipv6 ospf priority

**Overview** This command sets the router priority, which is a parameter used in the election of the designated router for the link.

The **no** variant of this command returns the router priority to the default of 1.

**Syntax**

```
ipv6 ospf priority <priority>
no ipv6 ospf priority
```

| Parameter | Description |
|---|---|
| *<priority>* | *<0-255>*<br>Specifies the router priority of the interface. The larger the value, the greater the priority level. The value 0 defines that the device cannot become either the DR, or backup DR for the link. |

**Default** The default priority is 1.

**Mode** Interface Configuration for a VLAN interface or Interface Configuration for a PPP interface.

**Usage** Set the priority to help determine the OSPF Designated Router (DR) for a link. If two routers attempt to become the DR, the router with the higher router priority becomes the DR. If the router priority is the same for two routers, the router with the higher router ID takes precedence.

Routers with zero router priority values cannot become the designated or backup designated router.

**Example** The following example shows setting the OSPFv3 priority value to 3 on the VLAN interface `vlan2`:

```
awplus# configure terminal
awplus(config)# interface vlan2
awplus(config-if)# ipv6 ospf priority 3
```

The following example shows setting the OSPFv3 priority value to 3 on the PPP interface `ppp0`:

```
awplus# configure terminal
awplus(config)# interface ppp0
awplus(config-if)# ipv6 ospf priority 3
```

# ipv6 ospf retransmit-interval

**Overview** Use this command to specify the time between link-state advertisement (LSA) retransmissions for adjacencies belonging to the interface.

Use the **no** variant of this command to return to the default of 5 seconds.

**Syntax**

```
ipv6 ospf retransmit-interval <1-65535>
no ipv6 ospf retransmit-interval
```

| Parameter | Description |
|---|---|
| *<1-65535>* | Specifies the interval in seconds. |

**Default** The default interval is 5 seconds.

**Mode** Interface Configuration for a VLAN interface or Interface Configuration for a PPP interface.

**Usage** After sending an LSA to a neighbor, the router keeps the LSA until it receives an acknowledgment. In case the router does not receive an acknowledgment during the set time (the retransmit interval value) it retransmits the LSA. Set the retransmission interval value conservatively to avoid needless retransmission. The interval should be greater than the expected round-trip delay between two routers.

**Example** The following example shows setting the `ospf retransmit interval` to 6 seconds on the VLAN interface `vlan2`:

```
awplus# configure terminal
awplus(config)# interface vlan2
awplus(config-if)# ipv6 ospf retransmit-interval 6
```

The following example shows setting the `ospf retransmit interval` to 6 seconds on the PPP interface `ppp0`:

```
awplus# configure terminal
awplus(config)# interface ppp0
awplus(config-if)# ipv6 ospf retransmit-interval 6
```

# ipv6 ospf transmit-delay

**Overview** Use this command to set the estimated time it takes to transmit a link-state-update packet on the VLAN interface.

Use the **no** variant of this command to return to the default of 1 second.

**Syntax**

```
ipv6 ospf transmit-delay <1-65535>
no ipv6 ospf transmit-delay
```

| Parameter | Description |
|---|---|
| *<1-65535>* | Specifies the time, in seconds, to transmit a link-state update. |

**Default** The default interval is 1 second.

**Mode** Interface Configuration for a VLAN interface or Interface Configuration for a PPP interface.

**Usage** The transmit delay value adds a specified time to the age field of an update. If the delay is not added, the time in which the LSA transmits over the link is not considered. This command is especially useful for low speed links. Add transmission and propagation delays when setting the transmit delay value.

**Example** To set the IPv6 OSPF transmit delay time to 3 seconds on the VLAN interface `vlan2`, use the following commands:

```
awplus# configure terminal
awplus(config)# interface vlan2
awplus(config-if)# ipv6 ospf transmit-delay 3
```

To set the IPv6 OSPF transmit delay time to 3 seconds on the PPP interface `ppp0`, use the following commands:

```
awplus# configure terminal
awplus(config)# interface ppp0
awplus(config-if)# ipv6 ospf transmit-delay 3
```

# ipv6 router ospf area

**Overview** Use this command to enable IPv6 OSPF routing on an interface.

Use the **no** variant of this command to disable IPv6 OSPF routing on an interface.

**Syntax**

```
ipv6 router ospf area <area-id> [tag <process-id>] [instance
<inst-id>]
no ipv6 router ospf area <area-id>
```

| Parameter | Description |
|---|---|
| *<area-id>* | The ID of the IPv6 OSPF routing area. Can be entered as either an IPv4 A.B.C.D address format, or as an unsigned integer in the range, 0 to 4294967295. Use either of the following forms when entering an area-ID:<br>• `area-id` *<A.B.C.D>* where A.B.C.D is a number entered in IPv4 address format.<br>• `area-id` <0 to 4294967295>. |
| *<process-id>* | The process tag denotes a separate router process. It can comprise any string of alphanumeric characters.<br>Note that this tag is local to the router on which it is set and does not appear in any OSPF packets or LSA. |
| *<instance-id>* | The OSPF instance ID, entered as an integer between 0 and 255. This is the value that will appear in the instance field of the IPv6 OSPF hello packet. |

**Defaults** IPv6 OSPF routing is disabled by default.

When enabling IPv6 OSPF routing:

- the process-tag will default to a null value if not set.
- the Instance ID defaults to 0 if not set.

**Mode** Interface Configuration for a VLAN interface or Interface Configuration for a PPP interface.

**Usage notes** When enabling IPv6 OSPF routing on an interface, specifying the area-ID is mandatory, but the Process tag and Instance are optional.

See the OSPFv3 Feature Overview and Configuration Guide for more information and examples.

**Examples** The following commands enable IPv6 OSPF on VLAN interface `vlan2`, OSPF area 1, tag PT2, and instance 2:

```
awplus# configure terminal
awplus(config)# interface vlan2
awplus(config-if)# ipv6 router ospf area 1 tag PT2 instance-id 2
```

The following commands disable IPv6 OSPF on VLAN interface `vlan2` and OSPF area 1:

```
awplus# configure terminal
awplus(config)# interface vlan2
awplus(config-if)# no ipv6 router ospf area 1
```

The following commands enable IPv6 OSPF on PPP interface `ppp0`, OSPF area 1, tag PT2, and instance 2:

```
awplus# configure terminal
awplus(config)# interface ppp0
awplus(config-if)# ipv6 router ospf area 1 tag PT2 instance-id 2
```

The following commands disable IPv6 OSPF on PPP interface `ppp0` and OSPF area 1:

```
awplus# configure terminal
awplus(config)# interface ppp0
awplus(config-if)# no ipv6 router ospf area 1
```

# max-concurrent-dd (IPv6 OSPF)

**Overview**

Use this command to limit the number of neighbors that can be concurrently processed in the database exchange. The specified value limits the number of neighbors from all interfaces, not per interface.

Use the **no** variant of this command to have no limit on the maximum number of LSAs.

**Syntax**

```
max-concurrent-dd <max-neighbors>
no max-concurrent-dd
```

| Parameter | Description |
|---|---|
| *<max-neighbors>* | <1-65535> The maximum number of neighbors. |

**Mode**

Router Configuration

**Usage notes**

This command is useful where bringing up several adjacencies on a router is affecting performance. In this situation, you can often enhance the system performance by limiting the number of neighbors that can be processed concurrently.

**Example**

The following example sets the max-concurrent-dd value to allow only 4 neighbors to be processed at a time.

```
awplus# configure terminal
awplus(config)# router ipv6 ospf
awplus(config-router)# max-concurrent-dd 4
```

**Related commands**

router ipv6 ospf

# passive-interface (IPv6 OSPF)

**Overview** Use this command to suppress the sending of Hello packets on a specified interface. If you use the **passive-interface** command without the optional parameters then **all** interfaces are put into passive mode.

Use the **no** variant of this command to allow the sending of Hello packets on all interfaces, or on the specified interface. If you use the **no** variant of this command without the optional parameters then **all** interfaces are removed from passive mode.

**Syntax**

```
passive-interface [<interface>]
no passive-interface [<interface>]
```

| Parameter | Description |
|---|---|
| *<interface>* | The name or the VID of the VLAN interface. |

**Mode** Router Configuration

**Usage** Configure an interface to be passive if you wish its connected route to be treated as an OSPF route (rather than an AS-external route), but do not wish to actually exchange any OSPF packets via this interface.

**Examples** To configure passive interface mode on interface vlan2, enter the following commands:

```
awplus(config)# router ipv6 ospf
awplus(config-router)# passive-interface vlan2
```

To configure passive interface mode on **all** interfaces, enter the following commands:

```
awplus(config)# router ipv6 ospf
awplus(config-router)# passive-interface
```

To remove passive interface mode on interface vlan2, enter the following commands:

```
awplus(config)# router ipv6 ospf
awplus(config-router)# no passive-interface vlan2
```

To remove passive interface mode on **all** interfaces, enter the following commands:

```
awplus(config)# router ipv6 ospf
awplus(config-router)# no passive-interface
```

# redistribute (IPv6 OSPF)

**Overview** Use this command to redistribute routes from other routing protocols, static routes and connected routes into an IPv6 OSPF routing table.

Use the **no** variant of this command to disable this function.

**Syntax**

```
redistribute <protocol>} [metric <0-16777214>] [metric-type
{1|2}] [route-map <route-map-entry>]
no redistribute <protocol>
```

| Parameter | Description | |
|---|---|---|
| *<protocol>* | The routing protocol to be redistributed, can be one of: | |
| | `connected` | Connected routes |
| | `rip` | Routing Internet Protocol |
| | `static` | Static Routes |
| `metric` | Specifies the external metric. | |
| `metric-type` | Specifies the external metric-type, either type 1 or type 2.<br>• **For Metric Type 1:** The best route is based on the external redistributed path cost plus the internal path cost presented by the native routing protocol.<br>• **For Metric Type 2:** The best route is based only on the external redistributed path cost. The internal path cost is only used to break a "tie" situation between two identical external path costs. | |
| `route-map` | The name of the specific route-map. | |

**Default** The default metric value for routes redistributed into OSPFv3 is 20. The metric can also be defined using the set metric command for a route map. Note that a metric defined using the set metric command for a route map overrides a metric defined with this command.

**Mode** Router Configuration

**Usage notes** You use this command to inject routes, learned from other routing protocols, into the OSPF domain to generate AS-external-LSAs. If a route-map is configured by this command, then that route-map is used to control which routes are redistributed and can set metric and tag values on particular routes.

The metric, metric-type, and tag values specified on this command are applied to any redistributed routes that are not explicitly given a different metric, metric-type, or tag value by the route map.

See the OSPFv3 Feature Overview and Configuration Guide for more information about metrics, and about behavior when configured in route maps.

Note that this command does not redistribute the default route. To redistribute the default route, use the default-information originate command.

**Example** The following example shows the redistribution of RIP routes into the IPv6 OSPF routing table, with a metric of 10 and a metric type of 1.

```
awplus# configure terminal
awplus(config)# router ipv6 ospf
awplus(config-router)# redistribute rip metric 10 metric-type 1
```

# restart ipv6 ospf graceful

**Overview** Use this command to force the OSPFv3 process to restart. You may optionally specify a grace-period value. If a grace-period is not specified then a default value of 120 seconds is applied.

You should specify a grace-period value of 120 seconds or more. Low grace-period values may cause the graceful restart process on neighboring routers to terminate with routes missing.

**Syntax**

```
restart ipv6 ospf graceful [grace-period <1-1800>]
```

| Parameter | Description |
|---|---|
| `grace-period` | Specify the grace period. |
| *<1-1800>* | The grace period in seconds. |

**Default** The default OSPF grace-period is 120 seconds.

**Mode** Privileged Exec

**Usage notes** After this command is executed, the OSPFv3 process immediately shuts down. It notifies the system that OSPF has performed a graceful shutdown. Routes installed by OSPF are preserved until the grace-period expires.

When a **restart ospf graceful** command is issued, the OSPF configuration is reloaded from the last saved configuration. Ensure you first enter the copy running-config startup- config command.

**Example** To restart OSPFv3, use the following commands:

```
awplus# copy running-config startup-config
awplus# restart ipv6 ospf graceful grace-period 200
```

To apply the default grace-period (120 seconds), use the following commands:

```
awplus# copy running-config startup-config
awplus# restart ipv6 ospf graceful
```

# router ipv6 ospf

**Overview** Use this command to create or remove an IPv6 OSPF routing process, or to enter the Router Configuration mode to configure a specific IPv6 OSPF routing process. Use the **no** variant of this command to terminate an IPv6 OSPF routing process.

Use the **no** parameter with the **process-id** parameter, to terminate and delete a specific IPv6 OSPF routing process.

**Syntax**

```
router ipv6 ospf [<process-id>]
no router ipv6 ospf [<process-id>]
```

| Parameter | Description |
|---|---|
| *<process-id>* | A character string that identifies a routing process.<br>If you do not specify the process-id a "null" process ID will be applied.<br>Note that this will appear in show output as *null* However you cannot select the null process by using the character string *null* as command entry characters. |

**Default** No routing process is defined by default.

**Mode** Global Configuration

**Usage notes** The process ID enables you to run more than one OSPF session within the same router, then configure each session to a different router port. Note that this function is internal to the router, and other routers (neighbors) have no knowledge of these different processes. The hello and LSAs issued from each process will appear as if coming from a separate physical router.

To a large extent the requirement for multiple processes has been replaced by the ability within IPv6 OSPF of running simultaneous router instances.

The process ID of IPv6 OSPF is an optional parameter for the **no** variant of this command only. When removing all IPv6 OSPF processes on the device, you do not need to specify each Process ID, but when removing particular IPv6 OSPF processes, you must specify each Process ID to be removed.

For a description of processes and instances and their configuration relationships, see the OSPFv3 Feature Overview and Configuration Guide.

**Example** This example shows the use of this command to enter Router Configuration mode.

```
awplus# configure terminal
awplus(config)# router ipv6 ospf P100
awplus(config-router)#
```

# router-id (IPv6 OSPF)

**Overview** Use this command to specify a router ID for the IPv6 OSPF process.

Use the **no** variant of this command to disable this function.

**Syntax**

```
router-id <router-id>
no router-id
```

| Parameter | Description |
|---|---|
| *<router-id>* | Specifies the router ID in IPv4 address format. |

**Mode** Router Configuration

**Usage** Configure each router with a unique router-id. In an IPv6 OSPF router process that has active neighbors, a new router-id takes effect at the next reload or when you restart OSPF manually.

**Example** The following example shows a specified router ID 0.0.4.5.

```
awplus# configure terminal
awplus(config)# router ipv6 ospf
awplus(config-router)# router-id 0.0.4.5
```

**Related commands** show ipv6 ospf

# show debugging ipv6 ospf

**Overview** Use this command to see what debugging is turned on for OSPFv3.

For information on filtering and saving command output, see the "Getting_Started with AlliedWare Plus" Feature Overview and Configuration_Guide.

**Syntax**

```
show debugging ipv6 ospf
```

**Mode** User Exec and Privileged Exec

**Example**

```
awplus# show debugging ipv6 ospf
```

**Output** Figure 30-1: Example output from the **show debugging ipv6 ospf** command

```
OSPFv3 debugging status:
  OSPFv3 all packet detail debugging is on
  OSPFv3 all IFSM debugging is on
  OSPFv3 all NFSM debugging is on
  OSPFv3 all LSA debugging is on
  OSPFv3 all NSM debugging is on
  OSPFv3 all route calculation debugging is on
  OSPFv3 all event debugging is on
```

# show ipv6 ospf

**Overview** Use this command in User Exec or Privileged Exec modes to display general information about all IPv6 OSPF routing processes, including OSPFv3 Authentication configuration and status information.

Include the process ID parameter with this command to display information about specified processes.

For information on filtering and saving command output, see the "Getting Started with AlliedWare Plus" Feature Overview and Configuration Guide.

**Syntax**

```
show ipv6 ospf
show ipv6 ospf <process-id>
```

| Parameter | Description |
|---|---|
| *<process-id>* | *<0-65535>*<br>The ID of the router process for which information will be displayed. If this parameter is included, only the information for the specified routing process is displayed. |

**Mode** User Exec and Privileged Exec

**Examples** To display general information about all IPv6 OSPF routing processes, use the command:

```
awplus# show ipv6 ospf
```

To display general information about IPv6 OSPF (OSPFv3) routing process P10, use the command:

```
awplus# show ipv6 ospf P10
```

**Output** Figure 30-2: Example output from the **show ipv6 ospf** command for process P10, showing OSPFv3 Authentication configuration information highlighted in bold

```
 awplus#show ipv6 ospf
  Routing Process "OSPFv3 (10)" with ID 192.168.1.2
  Route Licence: Route : Limit=Unlimited, Allocated=0, Visible=0,
Internal=0
  Route Licence: Breach: Current=0, Watermark=0
  Process uptime is 6 minutes
  Current grace period is 120 secs (default)
  SPF schedule delay min 0.500 secs, SPF schedule delay max 50.0
secs
  Minimum LSA interval 5 secs, Minimum LSA arrival 1 secs
  Number of incoming current DD exchange neighbors 0/5
  Number of outgoing current DD exchange neighbors 0/5
  Number of external LSA 0. Checksum Sum 0x0000
  Number of AS-Scoped Unknown LSA 0
  Number of LSA originated 4
  Number of LSA received 10
  Number of areas in this router is 1
     Area BACKBONE(0)
         Number of interfaces in this area is 1(1)
         MD5 Authentication SPI 1000
         NULL Encryption SHA-1 Auth, SPI 1001
         SPF algorithm executed 9 times
         Number of LSA 3.  Checksum Sum 0xF9CC
         Number of Unknown LSA 0
```

**Related commands**

area authentication ipsec spi

area encryption ipsec spi esp

router ipv6 ospf

# show ipv6 ospf database

**Overview** Use this command in User Exec or Privileged Exec modes to display a database summary for IPv6 OSPF information. Include the process ID parameter with this command to display information about specified processes.

For information on filtering and saving command output, see the "Getting Started with AlliedWare Plus" Feature Overview and Configuration Guide.

**Syntax**

```
show ipv6 ospf <process-id> database
[self-originate|max-age|adv router <adv-router-id>]
```

| Parameter | Description |
|---|---|
| `<process-id>` | *<0-65535>*<br>The ID of the router process for which information will be displayed. |
| `self-originate` | Displays self-originated link states. |
| `max-age` | Displays LSAs in MaxAge list. It maintains the list of the all LSAs in the database which have reached the max-age which is 3600 seconds. |
| `adv-router` | Advertising Router LSA. |
| `<adv-router- id>` | The Advertising Router ID<br>(usually entered in IPv4 address format A.B.C.D).<br>Note that this ID component no longer represents an address; it is simply a character string that has an IPv4 address format. |

**Mode** User Exec and Privileged Exec

**Example** To display the database summary for IPv6 OSPF information on process `P10`, use the command:

```
awplus# show ipv6 ospf P10 database
```

**Output** Figure 30-3: Example output from the **show ipv6 ospf P10 database** command

```
OSPFv3 Router with ID (0.0.1.1) (Process P10)

                Link-LSA (Interface vlan2)

Link State ID   ADV Router      Age  Seq#       CkSum  Prefix
0.0.0.202       0.0.1.1          46 0x800000c3 0x5f50      1
0.0.0.202       0.0.1.2           8 0x800000c3 0x4ca0      1

                Link-LSA (Interface vlan3)

Link State ID   ADV Router      Age  Seq#       CkSum  Prefix
0.0.0.203       0.0.1.1        1071 0x8000000e 0xe082      1
0.0.0.203       0.0.1.3        1057 0x8000000e 0xb8aa      1

                Router-LSA (Area 0.0.0.0)

Link State ID   ADV Router      Age  Seq#       CkSum    Link
0.0.0.0         0.0.1.1        1016 0x800000cd 0xa426      2
0.0.0.0         0.0.1.2         979 0x800000d8 0xad2b      1
0.0.0.0         0.0.1.3        1005 0x800000cf 0xefed      1

                Network-LSA (Area 0.0.0.0)

Link State ID   ADV Router      Age  Seq#       CkSum
0.0.0.202       0.0.1.2        1764 0x800000c2 0x94c3
0.0.0.203       0.0.1.3        1010 0x800000c4 0x8ac8

                Intra-Area-Prefix-LSA (Area 0.0.0.0)

Link State ID   ADV Router      Age  Seq#       CkSum  Prefix  Reference
0.0.0.2         0.0.1.2         978 0x800000a1 0x699a      1  Router-LSA
0.0.0.4         0.0.1.2        1764 0x800000c2 0xca4d      1  Network-LSA
0.0.0.1         0.0.1.3        1004 0x80000012 0xaee2      1  Router-LSA
0.0.0.7         0.0.1.3        1005 0x8000000e 0x3c89      1  Network-LSA

                AS-external-LSA

Link State ID   ADV Router      Age  Seq#       CkSum
0.0.0.13        0.0.1.1        1071 0x8000000e 0xca9f E2
0.0.0.14        0.0.1.1        1071 0x8000000e 0xcc9b E2
0.0.0.15        0.0.1.1        1071 0x8000000e 0xce97 E2
0.0.0.16        0.0.1.1        1071 0x8000000e 0xd093 E2
0.0.0.17        0.0.1.1        1071 0x8000000e 0xd28f E2
0.0.0.18        0.0.1.1        1071 0x8000000e 0xd48b E2
```

# show ipv6 ospf database external

**Overview** Use this command in User Exec or Privileged Exec modes to display information about the external LSAs.

For information on filtering and saving command output, see the "Getting Started with AlliedWare Plus" Feature Overview and Configuration Guide.

**Syntax**

```
show ipv6 ospf database external <adv-router-id>
[self-originate|adv-router <adv-router-id>]
```

| Parameter | Description |
|---|---|
| *<adv-router-id>* | The Advertising Router ID<br>(usually entered in IPv4 address format A.B.C.D).<br>Note that this ID component no longer represents an address; it is simply a character string that has an IPv4 address format. |
| `self-originate` | Self-originated link states. |
| `adv-router` | Displays all the LSAs of the specified router. |

**Mode** User Exec and Privileged Exec

**Examples** To display information about the external LSAs, use the following command:

```
awplus# show ipv6 ospf database external adv-router 10.10.10.1
```

**Output** Figure 30-4: Example output from the **show ipv6 ospf database external** command

```
LS age: 1087
  LS Type: AS-External-LSA
  Link State ID: 0.0.0.13
  Advertising Router: 0.0.1.1
  LS Seq Number: 0x8000000C
  Checksum: 0xCE9D
  Length: 52
    Metric Type: 2 (Larger than any link state path)
    Metric: 20
    Prefix: 2010:2222::/64
    Prefix Options: 0 (-|-|-|-)
    Forwarding Address: 2003:1111::1
...
```

# show ipv6 ospf database grace

**Overview** Use this command in User Exec or Privileged Exec modes to display information about the grace LSAs.

For information on filtering and saving command output, see the "Getting Started with AlliedWare Plus" Feature Overview and Configuration Guide.

**Syntax**

```
show ipv6 ospf database grace <adv-router-id>
[self-originate|adv-router <adv-router-id>]
```

| Parameter | Description |
|---|---|
| *<adv-router-id>* | The Advertising Router ID<br>(usually entered in IPv4 address format A.B.C.D).<br>Note that this ID component no longer represents an address; it is simply a character string that has an IPv4 address format. |
| `adv-router` | Displays all the LSAs of the specified router. |
| `self-originate` | Self-originated link states. |

**Mode** User Exec and Privileged Exec

**Examples** To display information about the grace LSAs, use the following command:

```
awplus# show ipv6 ospf database grace adv-router 10.10.10.1
```

**Output** Figure 30-5: Example output from the **show ipv6 ospf database grace** command

```
LS age: 1087
  LS Type: AS-External-LSA
  Link State ID: 0.0.0.13
  Advertising Router: 0.0.1.1
  LS Seq Number: 0x8000000C
  Checksum: 0xCE9D
  Length: 52
    Metric Type: 2 (Larger than any link state path)
    Metric: 20
    Prefix: 2010:2222::/64
    Prefix Options: 0 (-|-|-|-)
    Forwarding Address: 2003:1111::1
```

# show ipv6 ospf database inter-prefix

**Overview** Use this command in User Exec or Privileged Exec modes to display information about the inter-prefix LSAs.

For information on filtering and saving command output, see the "Getting Started with AlliedWare Plus" Feature Overview and Configuration Guide.

**Syntax**

```
show ipv6 ospf database inter-prefix <adv-router-id>
[self-originate|adv-router <adv-router-id>]
```

| Parameter | Description |
|---|---|
| *<adv-router-id>* | The Advertising Router ID<br>(usually entered in IPv4 address format A.B.C.D).<br>Note that this ID component no longer represents an address; it is simply a character string that has an IPv4 address format. |
| adv-router | Displays all the LSAs of the specified router. |
| self-originate | Self-originated link states. |

**Mode** User Exec and Privileged Exec

**Examples** To display information about the inter-prefix LSAs, use the following command:

```
awplus# show ipv6 ospf database external adv-router 10.10.10.1
```

**Output** Figure 30-6: Example output from the **show ipv6 ospf database inter-prefix** command

```
LS age: 1087
  LS Type: AS-External-LSA
  Link State ID: 0.0.0.13
  Advertising Router: 0.0.1.1
  LS Seq Number: 0x8000000C
  Checksum: 0xCE9D
  Length: 52
    Metric Type: 2 (Larger than any link state path)
    Metric: 20
    Prefix: 2010:2222::/64
    Prefix Options: 0 (-|-|-|-)
    Forwarding Address: 2003:1111::1
...
```

# show ipv6 ospf database inter-router

**Overview** Use this command in User Exec or Privileged Exec modes to display information about the inter-router LSAs.

For information on filtering and saving command output, see the "Getting Started with AlliedWare Plus" Feature Overview and Configuration Guide.

**Syntax**

```
show ipv6 ospf database inter-router <adv-router-id>
[self-originate| adv-router <adv-router-id>]
```

| Parameter | Description |
|---|---|
| *<adv-router-id>* | The Advertising Router ID<br>(usually entered in IPv4 address format A.B.C.D).<br>Note that this ID component no longer represents an address; it is simply a character string that has an IPv4 address format. |
| `adv-router` | Displays all the LSAs of the specified router. |
| `self-originate` | Self-originated link states. |

**Mode** User Exec and Privileged Exec

**Examples** To display information about the inter-router LSAs, use the following command:

```
awplus# show ipv6 ospf database inter-router adv-router
10.10.10.1
```

**Output** Figure 30-7: Example output from the **show ipv6 ospf database inter-router** command

```
LS age: 1087
  LS Type: AS-External-LSA
  Link State ID: 0.0.0.13
  Advertising Router: 0.0.1.1
  LS Seq Number: 0x8000000C
  Checksum: 0xCE9D
  Length: 52
    Metric Type: 2 (Larger than any link state path)
    Metric: 20
    Prefix: 2010:2222::/64
    Prefix Options: 0 (-|-|-|-)
    Forwarding Address: 2003:1111::1
...
```

# show ipv6 ospf database intra-prefix

**Overview** Use this command in User Exec or Privileged Exec modes to display information about the intra-prefix LSAs.

For information on filtering and saving command output, see the "Getting Started with AlliedWare Plus" Feature Overview and Configuration Guide.

**Syntax**

```
show ipv6 ospf database intra-prefix <adv-router-id>
[self-originate|adv-router <adv-router-id>]
```

| Parameter | Description |
|---|---|
| *<adv-router-id>* | The Advertising Router ID<br>(usually entered in IPv4 address format A.B.C.D).<br>Note that this ID component no longer represents an address; it is simply a character string that has an IPv4 address format. |
| adv-router | Displays all the LSAs of the specified router. |
| self-originate | Self-originated link states. |

**Mode** User Exec and Privileged Exec

**Examples** To display information about the intra-prefix LSAs, use the following command:

```
awplus# show ipv6 ospf database intra-prefix adv-router
10.10.10.1
```

**Output** Figure 30-8: Example output from the **show ipv6 ospf database intra-prefix** command

```
LS age: 1087
  LS Type: AS-External-LSA
  Link State ID: 0.0.0.13
  Advertising Router: 0.0.1.1
  LS Seq Number: 0x8000000C
  Checksum: 0xCE9D
  Length: 52
    Metric Type: 2 (Larger than any link state path)
    Metric: 20
    Prefix: 2010:2222::/64
    Prefix Options: 0 (-|-|-|-)
    Forwarding Address: 2003:1111::1
...
```

# show ipv6 ospf database link

**Overview** Use this command in User Exec or Privileged Exec modes to display information about the link LSAs.

For information on filtering and saving command output, see the "Getting Started with AlliedWare Plus" Feature Overview and Configuration Guide.

**Syntax**

```
show ipv6 ospf database link <adv-router-id>
[self-originate|adv-router <adv-router-id>]
```

| Parameter | Description |
|---|---|
| *<adv-router-id>* | The Advertising Router ID<br>(usually entered in IPv4 address format A.B.C.D).<br>Note that this ID component no longer represents an address; it is simply a character string that has an IPv4 address format. |
| `adv-router` | Displays all the LSAs of the specified router. |
| `self-originate` | Self-originated link states. |

**Mode** User Exec and Privileged Exec

**Examples** To display information about the link LSAs, use the following command:

```
awplus# show ipv6 ospf database link adv-router 10.10.10.1
```

**Output** Figure 30-9: Example output from the **show ipv6 ospf database link** command

```
LS age: 1087
  LS Type: AS-External-LSA
  Link State ID: 0.0.0.13
  Advertising Router: 0.0.1.1
  LS Seq Number: 0x8000000C
  Checksum: 0xCE9D
  Length: 52
    Metric Type: 2 (Larger than any link state path)
    Metric: 20
    Prefix: 2010:2222::/64
    Prefix Options: 0 (-|-|-|-)
    Forwarding Address: 2003:1111::1
...
```

# show ipv6 ospf database network

**Overview** Use this command in User Exec or Privileged Exec modes to display information about the network LSAs.

For information on filtering and saving command output, see the "Getting Started with AlliedWare Plus" Feature Overview and Configuration Guide.

**Syntax**

```
show ipv6 ospf database network <adv-router-id>
[self-originate|adv-router <adv-router-id>]
```

| Parameter | Description |
|---|---|
| *<adv-router-id>* | The router ID of the advertising router, in IPv4 address format. Note, however, that this no longer represents a real address. |
| `self-originate` | Self-originated link states. |
| `adv-router` | The advertising router selected. |

**Mode** User Exec and Privileged Exec

**Examples** To display information about the OSPFv3 network LSAs, use the following command:

```
awplus# show ipv6 ospf database network
```

**Output** Figure 30-10: Example output from the **show ipv6 ospf database network** command

```
OSPFv3 Router with ID (0.0.1.1) (Process P10)

                Network-LSA (Area 0.0.0.0)

  LS age: 97
  LS Type: Network-LSA
  Link State ID: 0.0.0.202
  Advertising Router: 0.0.1.2
  LS Seq Number: 0x800000C3
  Checksum: 0x92C4
  Length: 32
  Options: 0x000013 (-|R|-|-|E|V6)
    Attached Router: 0.0.1.2
    Attached Router: 0.0.1.1
```

```
  LS age: 1144
  LS Type: Network-LSA
  Link State ID: 0.0.0.203
  Advertising Router: 0.0.1.3
  LS Seq Number: 0x800000C4
  Checksum: 0x8AC8
  Length: 32
  Options: 0x000013 (-|R|-|-|E|V6)
    Attached Router: 0.0.1.3
    Attached Router: 0.0.1.1
```

# show ipv6 ospf database router

**Overview** Use this command in User Exec or Privileged Exec modes to display information only about the router LSAs.

For information on filtering and saving command output, see the "Getting Started with AlliedWare Plus" Feature Overview and Configuration Guide.

**Syntax**

```
show ipv6 ospf database router <adv-router-id>
[self-originate|adv-router <adv-router-id>]
```

| Parameter | Description |
|---|---|
| *<adv-router-id>* | The router ID of the advertising router, in IPv4 address format. Note, however, that this no longer represents a real address. |
| `self-originate` | Self-originated link states. |
| `adv-router` | The advertising router selected. |

**Mode** User Exec and Privileged Exec

**Examples** To display information about the OSPFv3 router LSAs, use the following command:

```
awplus# show ipv6 ospf database router
```

**Output** Figure 30-11: Example output from the **show ipv6 ospf database router** command

```
            OSPFv3 Router with ID (0.0.1.3) (Process P10)

                 Router-LSA (Area 0.0.0.0)

LS age: 556
  LS Type: Router-LSA
  Link State ID: 0.0.0.0
  Advertising Router: 0.0.1.1
  LS Seq Number: 0x800000CA
  Checksum: 0xAA23
  Length: 56
  Flags: 0x02 (-|-|E|-)
  Options: 0x000013 (-|R|-|-|E|V6)
```

```
    Link connected to: a Transit Network
      Metric: 1
      Interface ID: 203
      Neighbor Interface ID: 203
      Neighbor Router ID: 0.0.1.3

    Link connected to: a Transit Network
      Metric: 1
      Interface ID: 202
      Neighbor Interface ID: 202
      Neighbor Router ID: 0.0.1.2

  LS age: 520
  LS Type: Router-LSA
  Link State ID: 0.0.0.0
  Advertising Router: 0.0.1.2
  LS Seq Number: 0x800000D5
  Checksum: 0xB328
  Length: 40
  Flags: 0x00 (-|-|-|-)
  Options: 0x000013 (-|R|-|-|E|V6)

    Link connected to: a Transit Network
      Metric: 1
      Interface ID: 202
      Neighbor Interface ID: 202
      Neighbor Router ID: 0.0.1.2

LS age: 543
  LS Type: Router-LSA
  Link State ID: 0.0.0.0
  Advertising Router: 0.0.1.3
  LS Seq Number: 0x800000CC
  Checksum: 0xF5EA
  Length: 40
  Flags: 0x00 (-|-|-|-)
  Options: 0x000013 (-|R|-|-|E|V6)

    Link connected to: a Transit Network
      Metric: 1
      Interface ID: 203
      Neighbor Interface ID: 203
      Neighbor Router ID: 0.0.1.3
            OSPFv3 Router with ID (0.0.1.3) (Process P10)

                AS-external-LSA
```

```
  LS age: 1384
  LS Type: AS-External-LSA
  Link State ID: 0.0.0.13
  Advertising Router: 0.0.1.1
  LS Seq Number: 0x80000009
  Checksum: 0xD49A
  Length: 52
    Metric Type: 2 (Larger than any link state path)
    Metric: 20
    Prefix: 2010:2222::/64
    Prefix Options: 0 (-|-|-|-)
    Forwarding Address: 2003:1111::1

LS age: 1384
  LS Type: AS-External-LSA
  Link State ID: 0.0.0.14
  Advertising Router: 0.0.1.1
  LS Seq Number: 0x80000009
  Checksum: 0xD696
  Length: 52
    Metric Type: 2 (Larger than any link state path)
    Metric: 20
    Prefix: 2011:2222::/64
    Prefix Options: 0 (-|-|-|-)
    Forwarding Address: 2003:1111::1

LS age: 1384
  LS Type: AS-External-LSA
  Link State ID: 0.0.0.15
  Advertising Router: 0.0.1.1
  LS Seq Number: 0x80000009
  Checksum: 0xD892
  Length: 52
    Metric Type: 2 (Larger than any link state path)
    Metric: 20
    Prefix: 2012:2222::/64
    Prefix Options: 0 (-|-|-|-)
    Forwarding Address: 2003:1111::1

LS age: 1087
  LS Type: AS-External-LSA
  Link State ID: 0.0.0.13
  Advertising Router: 0.0.1.1
  LS Seq Number: 0x8000000C
  Checksum: 0xCE9D
  Length: 52
    Metric Type: 2 (Larger than any link state path)
    Metric: 20
    Prefix: 2010:2222::/64
    Prefix Options: 0 (-|-|-|-)
    Forwarding Address: 2003:1111::1
```

```
LS age: 1087
  LS Type: AS-External-LSA
  Link State ID: 0.0.0.14
  Advertising Router: 0.0.1.1
  LS Seq Number: 0x8000000C
  Checksum: 0xD099
  Length: 52
    Metric Type: 2 (Larger than any link state path)
    Metric: 20
    Prefix: 2011:2222::/64
    Prefix Options: 0 (-|-|-|-)
    Forwarding Address: 2003:1111::1

LS age: 1087
  LS Type: AS-External-LSA
  Link State ID: 0.0.0.15
  Advertising Router: 0.0.1.1
  LS Seq Number: 0x8000000C
  Checksum: 0xD295
  Length: 52
    Metric Type: 2 (Larger than any link state path)
    Metric: 20
    Prefix: 2012:2222::/64
    Prefix Options: 0 (-|-|-|-)
    Forwarding Address: 2003:1111::1

LS age: 1087
  LS Type: AS-External-LSA
  Link State ID: 0.0.0.16
  Advertising Router: 0.0.1.1
  LS Seq Number: 0x8000000C
  Checksum: 0xD491
  Length: 52
    Metric Type: 2 (Larger than any link state path)
    Metric: 20
    Prefix: 2013:2222::/64
    Prefix Options: 0 (-|-|-|-)
    Forwarding Address: 2003:1111::1

LS age: 1087
  LS Type: AS-External-LSA
  Link State ID: 0.0.0.17
  Advertising Router: 0.0.1.1
  LS Seq Number: 0x8000000C
  Checksum: 0xD68D
  Length: 52
    Metric Type: 2 (Larger than any link state path)
    Metric: 20
    Prefix: 2014:2222::/64
    Prefix Options: 0 (-|-|-|-)
    Forwarding Address: 2003:1111::1
```

```
LS age: 1087
  LS Type: AS-External-LSA
  Link State ID: 0.0.0.18
  Advertising Router: 0.0.1.1
  LS Seq Number: 0x8000000C
  Checksum: 0xD889
  Length: 52
    Metric Type: 2 (Larger than any link state path)
    Metric: 20
    Prefix: 2015:2222::/64
    Prefix Options: 0 (-|-|-|-)
    Forwarding Address: 2003:1111::1
```

# show ipv6 ospf interface

**Overview** Use this command in User Exec or Privileged Exec modes to display interface information for OSPF for all interfaces or a specified interface, including OSPFv3 Authentication status for all interfaces or for a specified interface.

For information on filtering and saving command output, see the "Getting Started with AlliedWare Plus" Feature Overview and Configuration Guide.

**Syntax**

```
show ipv6 ospf interface [<interface-name>]
```

| Parameter | Description |
|---|---|
| *<interface-name>* | An alphanumeric string that is the interface name. Omit the optional interface to display OSPF |

**Mode** User Exec and Privileged Exec

**Examples**

```
awplus# show ipv6 ospf interface vlan2
```

**Output** Figure 30-12: Example output from the **show ipv6 ospf interface** command showing OSPFv3 Authentication configuration information highlighted in bold

```
awplus#show ipv6 ospf interface
 vlan2 is up, line protocol is up
   Interface ID 302
   IPv6 Prefixes
     fe80::215:77ff:fead:f87e/64 (Link-Local Address)
   Security Policy
     MD5 Authentication SPI 1000
     NULL Encryption SHA-1 Auth, SPI 1001

   OSPFv3 Process (10), Area 0.0.0.0, Instance ID 0
     Router ID 192.168.1.2, Network Type BROADCAST, Cost: 1
     Transmit Delay is 1 sec, State Backup, Priority 1
     Interface state Backup
     Designated Router (ID) 192.168.1.1
       Interface Address fe80::21d:e5ff:fec9:cfbe
     Backup Designated Router (ID) 192.168.1.2
       Interface Address fe80::215:77ff:fead:f87e
     Timer interval configured, Hello 10, Dead 40, Wait 40,
Retransmit 5
       Hello due in 00:00:07
     Neighbor Count is 1, Adjacent neighbor count is 1
```

Figure 30-13: Example output from the **show ipv6 ospf interface** vlan3 command

```
awplus#show ipv6 ospf interface vlan3
vlan3 is up, line protocol is up
  Interface ID 203
  IPv6 Prefixes
    fe80::200:cdff:fe24:daae/64 (Link-Local Address)
    2003:1111::2/64
  OSPFv3 Process (P1), Area 0.0.0.0, Instance ID 0
    Router ID 0.0.1.1, Network Type BROADCAST, Cost: 1
    Transmit Delay is 1 sec, State DR, Priority 1
    Designated Router (ID) 0.0.1.1
      Interface Address fe80::200:cdff:fe24:daae
    No backup designated router on this link
    Timer interval configured, Hello 10, Dead 40, Wait 40,
Retransmit 5
      Hello due in 00:00:02
    Neighbor Count is 0, Adjacent neighbor count is 0
```

**Related commands**

ipv6 ospf authentication spi

ipv6 ospf encryption spi esp

# show ipv6 ospf neighbor

**Overview** Use this command in User Exec or Privileged Exec modes to display information on OSPF neighbors. Include the process ID parameter with this command to display information about specified processes.

For information on filtering and saving command output, see the "Getting Started with AlliedWare Plus" Feature Overview and Configuration Guide.

**Syntax**

```
show ipv6 ospf [<process-id>] neighbor <neighbor-id>
show ipv6 ospf [<process-id>] neighbor detail
show ipv6 ospf [<process-id>] neighbor <interface> [detail]
```

| Parameter | Description |
|---|---|
| *<process-id>* | *<character string>*<br>The ID of the OSPF process for which information will be displayed. |
| *<neighbor-id>* | The Neighbor ID, entered in IP address (A.B.C.D) format. |
| detail | Detail of all neighbors. |
| *<interface>* | IP address of the interface. |

**Mode** User Exec and Privileged Exec

**Examples**

```
awplus# show ipv6 ospf neighbor
```

**Output** Figure 30-14: Example output from **show ipv6 ospf neighbor**

```
awplus#show ipv6 ospf P1 neighbor 2.2.2.2
OSPFv3 Process (P1)
Neighbor ID     Pri      State                    Dead Time   Interface Instance ID
2.2.2.2         5        2-Way/DROther            00:00:33    vlan3              0
```

Figure 30-15: Example output from **show ipv6 ospf neighbor detail**

```
awplus#show ipv6 ospf neighbor detail
Neighbor 0.0.1.2, interface address fe80::215:77ff:fec9:7472
   In the area 0.0.0.0 via interface vlan2
   Neighbor priority is 1, State is Full, 6 state changes
   DR is 0.0.1.2     BDR is 0.0.1.1
   Options is 0x000013 (-|R|-|-|E|V6)
   Dead timer due in 00:00:33
   Database Summary List 0
   Link State Request List 0
   Link State Retransmission List 0
```

# show ipv6 ospf route

**Overview** Use this command in User Exec or Privileged Exec modes to display the OSPF routing table. Include the process ID parameter with this command to display the OSPF routing table for specified processes.

For information on filtering and saving command output, see the "Getting Started with AlliedWare Plus" Feature Overview and Configuration Guide.

**Syntax**

```
show ipv6 ospf [<process-id>] route
```

| Parameter | Description |
|---|---|
| *<process-id>* | A character string that specifies the router process. If this parameter is included, only the information for this specified routing process is displayed. |

**Mode** User Exec and Privileged Exec

**Examples** To display the OSPF routing table, use the command:

```
awplus# show ipv6 ospf route
```

**Output** Figure 30-16: Example output from the **show ipv6 ospf P10 route** command for a specific process

```
OSPFv3 Process (P1)
Codes: C - connected, D - Discard, O - OSPF, IA - OSPF inter
area
       E1 - OSPF external type 1, E2 - OSPF external type 2

   Destination                                    Metric
     Next-hop
O  2002:1111::/64                                      2
     via fe80::200:cdff:fe24:daae, vlan3, Area 0.0.0.0
C  2003:1111::/64                                      1
     directly connected, vlan3, Area 0.0.0.0
O  2004:1111::/64                                      3
     via fe80::200:cdff:fe24:daae, vlan3, Area 0.0.0.0
C  2005:1111::/64                                      1
     directly connected, vlan5, Area 0.0.0.0
E2 2010:2222::/64                                    1/20
     via 2003:1111::1, vlan3
E2 2011:2222::/64                                    1/20
     via 2003:1111::1, vlan3
E2 2012:2222::/64                                    1/20
     via 2003:1111::1, vlan3
E2 2013:2222::/64                                    1/20
     via 2003:1111::1, vlan3
E2 2014:2222::/64                                    1/20
     via 2003:1111::1, vlan3
E2 2015:2222::/64                                    1/20
     via 2003:1111::1, vlan3
```

# show ipv6 ospf virtual-links

**Overview** Use this command in User Exec or Privileged Exec modes to display virtual link information, including OSPFv3 Authentication status for virtual links.

For information on filtering and saving command output, see the "Getting Started with AlliedWare Plus" Feature Overview and Configuration Guide.

**Syntax**

```
show ipv6 ospf virtual-links
```

**Mode** User Exec and Privileged Exec

**Usage notes** See the OSPFv3 Feature Overview and Configuration Guide for more information and examples.

**Examples** To display virtual link information, use the command:

```
awplus# show ipv6 ospf virtual-links
```

**Output** Figure 30-17: Example output from the **show ipv6 ospf virtual-links** command showing OSPFv3 Authentication configuration information highlighted in bold

```
awplus#show ipv6 ospf virtual-links
 Virtual Link VLINK1 to router 192.168.1.10 is down
   Transit area 0.0.0.1 via interface *, instance ID 0
   Local address
   Remote address
   MD5 Authentication SPI 1000
   NULL encryption SHA-1 auth SPI 1001
   Transmit Delay is 1 sec, State Down,
   Timer intervals configured, Hello 10, Dead 40, Wait 40,
Retransmit 5
     Hello due in inactive
     Adjacency state Down
```

**Related commands**

area virtual-link authentication ipsec spi

area virtual-link encryption ipsec spi

# summary-address (IPv6 OSPF)

**Overview** Use this command in Router Configuration mode to summarize, or possibly suppress, external redistributed OSPFv3 routes within the specified address range.

Use the **no** variant of this command in Router Configuration mode to stop summarizing, or suppressing, external redistributed OSPFv3 routes within the specified address range.

**Syntax**

```
summary-address <ipv6-addr/prefix-length> [not-advertise] [tag
<0-4294967295>]
```

```
no summary-address <ipv6-addr/prefix-length> [not-advertise]
[tag <0-4294967295>]
```

| Parameter | Description |
|---|---|
| *<ipv6-addr/prefix-length>* | Specifies the base IPv6 address of the IPv6 summary address. The range of addresses given as IPv6 starting address and an IPv6 prefix length. |
| `not-advertise` | Set the **not-advertise** option if you do not want OSPFv3 to advertise either the summary address or the individual networks within the range of the summary address. |
| `tag` *<0-4294967295>* | The tag parameter specifies the tag value that OSPFv3 places in the AS external LSAs created as a result of redistributing the summary route. The tag overrides tags set by the original route. |

**Default** The default tag value for a summary address is 0.

**Mode** Router Configuration

**Usage** An address range is a pairing of an address and a prefix length. Redistributing routes from other protocols into OSPFv3 requires the router to advertise each route individually in an external LSA. Use this command to advertise one summary route for all redistributed routes covered by a specified prefix to decrease the size of the OSPFv3 link state database.

For example, if the specified address range is 2001:0db8:44::/48, then summary-address functionality will match 2001:0db8:4400:0000::1/128 through 2001:0db8:44ff:ffff::1/128.

Ensure OSPFv3 routes exist in the summary address range for advertisement before using this command.

**Example** The following example uses the `summary-address` command to aggregate external LSAs that match the IPv6 prefix `2001:0db8::/32` and assigns a tag value of 3.

```
awplus# configure terminal
awplus(config)# router ipv6 ospf
awplus(config-router)# summary-address 2001:0db8::/32 tag 3
```

The following example uses the `no summary-address` command to stop summarizing IPv6 addresses in the address range covered within the IPv6 prefix `2001:0db8::/32`.

```
awplus# configure terminal
awplus(config)# router ipv6 ospf
awplus(config-router)# no summary-address 2001:0db8::/32
```

# timers spf exp (IPv6 OSPF)

**Overview** Use this command to adjust route calculation timers using exponential back-off delays.

Use **no** form of this command to return to the default exponential back-off timer values.

**Syntax**

```
timers spf exp <min-holdtime> <max-holdtime>
no timers spf exp <min-holdtime> <max-holdtime>
```

| Parameter | Description |
|---|---|
| *<min-holdtime>* | Specifies the minimum delay between receiving a change to the SPF calculation in milliseconds. The range is 0-2147483647. The default SPF min-holdtime value is 50 milliseconds. |
| *<max-holdtime>* | Specifies the maximum delay between receiving a change to the SPF calculation in milliseconds. The range is 0-2147483647. The default SPF max-holdtime value is 50 seconds. |

**Mode** Router Configuration

**Usage notes** This command configures the minimum and maximum delay time between the receipt of a topology change and the calculation of the Shortest Path First (SPF).

The time between SPF runs increases if a topology change occurs (and triggers a new SPF run) before the last SPF holdtimer has finished. The time between runs may increase up to the max-holdtime value.This increase in holdtime prevents too many SPF runs from occurring if multiple OSPF topology change events occur.

**Examples** To set the minimum delay time to 5 milliseconds and maximum delay time to 2 seconds, use the commands:

```
awplus# configure terminal
awplus(config)# router ipv6 ospf 100
awplus(config-router)# timers spf exp 5 2000
```

**Related commands** show ipv6 ospf

# undebug ipv6 ospf events

**Overview** This command applies the functionality of the no debug ipv6 ospf events command.

# undebug ipv6 ospf ifsm

**Overview** This command applies the functionality of the no debug ipv6 ospf ifsm command.

# undebug ipv6 ospf lsa

**Overview** This command applies the functionality of the no debug ipv6 ospf lsa command.

# undebug ipv6 ospf nfsm

**Overview** This command applies the functionality of the no debug ipv6 ospf nfsm command.

# undebug ipv6 ospf packet

**Overview** This command applies the functionality of the no debug ipv6 ospf packet command.

# undebug ipv6 ospf route

**Overview** This command applies the functionality of the no debug ipv6 ospf route command.

# 31 BGP and BGP4+ Commands

## Introduction

**Overview** This chapter provides an alphabetical reference of commands used to configure the Border Gateway Protocol for IPv4 (BGP) and for IPv6 (BGP4+).

For basic BGP and BGP4+ introduction information and configuration examples, see the Routing_Protocol Guide.

**Command List**


- "address-family" on page 1231
- "aggregate-address" on page 1233
- "auto-summary (BGP only)" on page 1236
- "bgp aggregate-nexthop-check" on page 1238
- "bgp always-compare-med" on page 1239
- "bgp bestpath as-path ignore" on page 1241
- "bgp bestpath compare-confed-aspath" on page 1242
- "bgp bestpath compare-routerid" on page 1243
- "bgp bestpath med" on page 1244
- "bgp bestpath med remove-recv-med" on page 1246
- "bgp bestpath med remove-send-med" on page 1247
- "bgp client-to-client reflection" on page 1248
- "bgp cluster-id" on page 1249
- "bgp confederation identifier" on page 1251
- "bgp confederation peers" on page 1252
- "bgp config-type" on page 1254
- "bgp dampening" on page 1256
- "bgp damp-peer-oscillation (BGP only)" on page 1258

- "bgp default ipv4-unicast" on page 1259
- "bgp default local-preference (BGP only)" on page 1260
- "bgp deterministic-med" on page 1261
- "bgp enforce-first-as" on page 1263
- "bgp fast-external-failover" on page 1264
- "bgp graceful-restart" on page 1265
- "bgp graceful-restart graceful-reset" on page 1267
- "bgp log-neighbor-changes" on page 1268
- "bgp memory maxallocation" on page 1270
- "bgp nexthop-trigger-count" on page 1271
- "bgp nexthop-trigger delay" on page 1272
- "bgp nexthop-trigger enable" on page 1273
- "bgp rfc1771-path-select (BGP only)" on page 1274
- "bgp rfc1771-strict (BGP only)" on page 1275
- "bgp router-id" on page 1276
- "bgp scan-time (BGP only)" on page 1278
- "bgp update-delay" on page 1279
- "clear bgp *" on page 1280
- "clear bgp (IPv4 or IPv6 address)" on page 1281
- "clear bgp (ASN)" on page 1283
- "clear bgp external" on page 1284
- "clear bgp peer-group" on page 1285
- "clear bgp ipv6 (ipv6 address) (BGP4+ only)" on page 1286
- "clear bgp ipv6 dampening (BGP4+ only)" on page 1287
- "clear bgp ipv6 flap-statistics (BGP4+ only)" on page 1288
- "clear bgp ipv6 (ASN) (BGP4+ only)" on page 1289
- "clear bgp ipv6 external (BGP4+ only)" on page 1290
- "clear bgp ipv6 peer-group (BGP4+ only)" on page 1291
- "clear ip bgp * (BGP only)" on page 1292
- "clear ip bgp (IPv4) (BGP only)" on page 1294
- "clear ip bgp dampening (BGP only)" on page 1296
- "clear ip bgp flap-statistics (BGP only)" on page 1297
- "clear ip bgp (ASN) (BGP only)" on page 1298
- "clear ip bgp external (BGP only)" on page 1299
- "clear ip bgp peer-group (BGP only)" on page 1300

- "clear ip prefix-list" on page 1301
- "debug bgp (BGP only)" on page 1302
- "distance (BGP and BGP4+)" on page 1304
- "exit-address-family" on page 1306
- "ip community-list" on page 1307
- "ip community-list expanded" on page 1309
- "ip community-list standard" on page 1311
- "ip extcommunity-list expanded" on page 1313
- "ip extcommunity-list standard" on page 1315
- "ip prefix-list" on page 1317
- "ipv6 prefix-list" on page 1319
- "match as-path" on page 1321
- "match community" on page 1322
- "max-paths" on page 1324
- "neighbor activate" on page 1325
- "neighbor advertisement-interval" on page 1328
- "neighbor allowas-in" on page 1331
- "neighbor as-origination-interval" on page 1334
- "neighbor attribute-unchanged" on page 1336
- "neighbor capability graceful-restart" on page 1339
- "neighbor capability orf prefix-list" on page 1342
- "neighbor capability route-refresh" on page 1345
- "neighbor collide-established" on page 1348
- "neighbor default-originate" on page 1351
- "neighbor description" on page 1354
- "neighbor disallow-infinite-holdtime" on page 1357
- "neighbor dont-capability-negotiate" on page 1359
- "neighbor ebgp-multihop" on page 1362
- "neighbor enforce-multihop" on page 1365
- "neighbor filter-list" on page 1368
- "neighbor interface" on page 1371
- "neighbor local-as" on page 1372
- "neighbor maximum-prefix" on page 1375
- "neighbor next-hop-self" on page 1378
- "neighbor override-capability" on page 1381

- "neighbor passive" on page 1383
- "neighbor password" on page 1386
- "neighbor peer-group (add a neighbor)" on page 1390
- "neighbor peer-group (create a peer-group)" on page 1392
- "neighbor port" on page 1393
- "neighbor prefix-list" on page 1396
- "neighbor remote-as" on page 1399
- "neighbor remove-private-AS (BGP only)" on page 1402
- "neighbor restart-time" on page 1404
- "neighbor route-map" on page 1407
- "neighbor route-reflector-client (BGP only)" on page 1411
- "neighbor route-server-client (BGP only)" on page 1413
- "neighbor send-community" on page 1414
- "neighbor shutdown" on page 1418
- "neighbor soft-reconfiguration inbound" on page 1420
- "neighbor timers" on page 1423
- "neighbor transparent-as" on page 1426
- "neighbor transparent-nexthop" on page 1428
- "neighbor unsuppress-map" on page 1430
- "neighbor update-source" on page 1433
- "neighbor version (BGP only)" on page 1437
- "neighbor weight" on page 1439
- "network (BGP and BGP4+)" on page 1442
- "network synchronization" on page 1445
- "redistribute (into BGP or BGP4+)" on page 1446
- "restart bgp graceful (BGP only)" on page 1448
- "router bgp" on page 1449
- "route-map" on page 1450
- "set as-path" on page 1453
- "set community" on page 1454
- "show bgp ipv6 (BGP4+ only)" on page 1456
- "show bgp ipv6 community (BGP4+ only)" on page 1457
- "show bgp ipv6 community-list (BGP4+ only)" on page 1459
- "show bgp ipv6 dampening (BGP4+ only)" on page 1460
- "show bgp ipv6 filter-list (BGP4+ only)" on page 1461

- "show bgp ipv6 inconsistent-as (BGP4+ only)" on page 1462
- "show bgp ipv6 longer-prefixes (BGP4+ only)" on page 1463
- "show bgp ipv6 neighbors (BGP4+ only)" on page 1464
- "show bgp ipv6 paths (BGP4+ only)" on page 1467
- "show bgp ipv6 prefix-list (BGP4+ only)" on page 1468
- "show bgp ipv6 quote-regexp (BGP4+ only)" on page 1469
- "show bgp ipv6 regexp (BGP4+ only)" on page 1470
- "show bgp ipv6 route-map (BGP4+ only)" on page 1472
- "show bgp ipv6 summary (BGP4+ only)" on page 1473
- "show bgp memory maxallocation (BGP only)" on page 1474
- "show bgp nexthop-tracking (BGP only)" on page 1475
- "show bgp nexthop-tree-details (BGP only)" on page 1476
- "show debugging bgp (BGP only)" on page 1477
- "show ip bgp (BGP only)" on page 1478
- "show ip bgp attribute-info (BGP only)" on page 1479
- "show ip bgp cidr-only (BGP only)" on page 1480
- "show ip bgp community (BGP only)" on page 1481
- "show ip bgp community-info (BGP only)" on page 1483
- "show ip bgp community-list (BGP only)" on page 1484
- "show ip bgp dampening (BGP only)" on page 1485
- "show ip bgp filter-list (BGP only)" on page 1487
- "show ip bgp inconsistent-as (BGP only)" on page 1488
- "show ip bgp longer-prefixes (BGP only)" on page 1489
- "show ip bgp neighbors (BGP only)" on page 1490
- "show ip bgp neighbors connection-retrytime (BGP only)" on page 1493
- "show ip bgp neighbors hold-time (BGP only)" on page 1494
- "show ip bgp neighbors keepalive (BGP only)" on page 1495
- "show ip bgp neighbors keepalive-interval (BGP only)" on page 1496
- "show ip bgp neighbors notification (BGP only)" on page 1497
- "show ip bgp neighbors open (BGP only)" on page 1498
- "show ip bgp neighbors rcvd-msgs (BGP only)" on page 1499
- "show ip bgp neighbors sent-msgs (BGP only)" on page 1500
- "show ip bgp neighbors update (BGP only)" on page 1501
- "show ip bgp paths (BGP only)" on page 1502
- "show ip bgp prefix-list (BGP only)" on page 1503

- "show ip bgp quote-regexp (BGP only)" on page 1504
- "show ip bgp regexp (BGP only)" on page 1506
- "show ip bgp route-map (BGP only)" on page 1508
- "show ip bgp scan (BGP only)" on page 1509
- "show ip bgp summary (BGP only)" on page 1510
- "show ip community-list" on page 1512
- "show ip extcommunity-list" on page 1513
- "show ip prefix-list" on page 1514
- "show ipv6 prefix-list" on page 1515
- "show ip protocols bgp (BGP only)" on page 1516
- "show route-map" on page 1517
- "synchronization" on page 1518
- "timers (BGP)" on page 1520
- "undebug bgp (BGP only)" on page 1522

# address-family

**Overview** This command enters the IPv4 or IPv6 Address-Family Configuration command mode. In this mode you can configure address-family specific parameters.

When using VRF-lite, you can enter IPv4 Address Family Configuration mode for a specified VRF instance before configuring that instance.

**Syntax [BGP]**

```
address-family ipv4 [unicast]
no address-family ipv4 [unicast]
```

**Syntax (VRF-lite)**

```
address-family ipv4 [unicast|vrf <vrf-name>]
no address-family ipv4 [unicast|vrf <vrf-name>]
```

**Syntax [BGP4+]**

```
address-family ipv6 [unicast]
no address-family ipv6 [unicast]
```

| Parameter | Description |
|---|---|
| ipv4 | Configure parameters relating to the exchange of IPv4 prefixes. |
| ipv6 | Configure parameters relating to the exchange of IPv6 prefixes. |
| unicast | Configure parameters relating to the exchange of routes to unicast destinations. |
| vrf | Applies the command to the specified VRF instance. |
| *<vrf-name>* | The name of the VRF instance to enter IPv4 Address-Family mode for. |

**Mode [BGP]** Router Configuration

**Mode [BGP4+]** Router Configuration

**Usage notes** To leave the IPv4 or IPv6 Address Family Configuration mode, and return to the Router Configuration mode, use the exit-address-family command.

**Example [BGP]**

```
awplus# configure terminal
awplus(config)# router bgp 100
awplus(config-router)# neighbor 192.168.0.1 remote-as 100
awplus(config-router)# address-family ipv4 vrf
green
awplus(config-router-af)# neighbor 192.168.0.1 activate
awplus(config-router-af)# exit-address-family
awplus(config-router)#
```

**Example [BGP4+]**

```
awplus# configure terminal
awplus(config)# router bgp 100
awplus(config-router)# neighbor 2001:0db8:010d::1 remote-as 100
awplus(config-router)# address-family ipv6
awplus(config-router-af)# neighbor 2001:0db8:010d::1 activate
awplus(config-router-af)# exit-address-family
awplus(config-router)#
```

**Related commands**

exit-address-family

**Command changes**

Added to AlliedWare Plus prior to 5.4.6-1

Version 5.4.6-2.1: VRF-lite support added to BGP for AR-series products

Version 5.4.7-2.1: BGP support added for IEx510, x550 series

Version 5.4.7-2.4: BGP support added for IE300 series

# aggregate-address

**Overview** This command adds an aggregate route that can be advertised to BGP or BGP4+ neighbors. This command creates an aggregate entry in the BGP or BGP4+ routing table if the device learns, by any means, any routes that are within the range configured by the aggregate address/mask.

When this command is used with the **summary-only** option, the more-specific routes of the aggregate are suppressed to all neighbors. Use the neighbor unsuppress-map command instead to selectively leak more-specific routes to a particular neighbor.

The **no** variant of this command removes the aggregate configured by the **aggregate-address** command.

**Syntax [BGP]**

```
aggregate-address <ip-addr/m> {summary-only|as-set}
no aggregate-address <ip-addr/m> {summary-only|as-set}
```

**Syntax [BGP4+]**

```
aggregate-address <ipv6-addr/prefix-length>
{summary-only|as-set}
no aggregate-address <ipv6-addr/prefix-length>
{summary-only|as-set}
```

| Parameter | Description |
|---|---|
| *<ip-addr/m>* | Specifies the aggregate IPv4 address and mask. |
| *<ipv6-addr/prefix-length>* | Specifies the aggregate IPv6 address. The IPv6 address uses the format X:X::X:X/Prefix-Length. The prefix-length is usually set between 0 and 64. |
| `summary-only` | Filters more specific routes from updates. Only the aggregate address/mask will be advertised, and none of the component addresses that fall within the range of the aggregate address/mask. |
| `as-set` | Generates AS set path information. The AS-path advertised with the aggregate is an unordered list of all the AS-numbers that appear in any of the AS-paths of the component routes, with each AS-number appearing just once in the list. |

**Mode [BGP]** Router Configuration or IPv4 Address Family Configuration

**Mode [BGP4+]** IPv6 Address Family Configuration

**Usage [BGP]** If the `summary-only` parameter is specified, then only the aggregate address/mask will be advertised, and none of the component addresses that fall within the range of the aggregate address/mask. For example, if you configure:

```
awplus# configure terminal

awplus(config)# router bgp 100

awplus(config-router)# aggregate-address 172.0.0.0/8 summary-
only
```

then the device will advertise the prefix `172.0.0.0/8`, but no component routes like `172.10.0.0/16`

The `as-set` parameter controls the AS-path attribute that is advertised with the aggregate route. If the device has learned multiple routes that are within the range of the aggregate address/mask, and the AS-paths associated with those routes contain different sets of AS-numbers, then it is not possible to create a single AS-path that accurately represents the AS-paths of all those component routes. In this case, the device will, by default, advertise a NULL AS-path with the aggregate.

**Usage [BGP4+]**

If the `summary-only` parameter is specified, then only the aggregate address/mask will be advertised, and none of the component addresses that fall within the range of the aggregate address/mask. For example, if you configure:

```
awplus# configure terminal

awplus(config)# router bgp 100

awplus(config-router)#address-family ipv6

awplus(config-router-af)# aggregate-address 2001:0db8::/64
summary-only
```

then the device will advertise the prefix 2001:0db8::/64, but no component routes like 2001:0db8:010d::1/128

**Examples [BGP]**

```
awplus# configure terminal
awplus(config)# router bgp 100
awplus(config-router)# aggregate-address 192.0.0.0/8 as-set
summary-only
awplus# configure terminal
awplus(config)# router bgp 100
awplus(config-router)# no aggregate-address 192.0.0.0/8 as-set
summary-only
```

**Examples [BGP4+]**

```
awplus# configure terminal
awplus(config)# router bgp 100
awplus(config-router)# address family ipv6
awplus(config-router-af)# aggregate-address 2001:0db8::/64
as-set summary-only
```

```
awplus# configure terminal
awplus(config)# router bgp 100
awplus(config-router)# address family ipv6
awplus(config-router-af)# no aggregate-address 2001:0db8::/64
as-set summary-only
```

**Related commands**

aggregate-address

match as-path

**Command changes**

Added to AlliedWare Plus prior to 5.4.6-1

Version 5.4.7-2.1: BGP support added for IEx510, x550 series

Version 5.4.7-2.4: BGP support added for IE300 series

# auto-summary (BGP only)

**Overview** Use this command to enable sending summarized routes by a BGP speaker to its peers in the Router Configuration mode or in the Address-Family Configuration mode. BGP uses auto-summary to advertise summarized routes.

Use the **no** variant of this command to disable BGP auto-summary.

**Syntax**

```
auto-summary
no auto-summary
```

**Default** The auto-summary function is disabled by default.

**Mode** Router Configuration and Address Family IPv4 mode

**Usage** If certain routes have already been advertised, enabling auto-summary results in non- summarized routes being withdrawn and only summarized routes are advertised. Summarized routes are advertised before non-summarized routes are withdrawn from all connected peers.

If certain routes have already been advertised, disabling auto-summary results in summarized routes being withdrawn and only non-summarized routes are advertised. Non-summarized routes are advertised before summarized routes are withdrawn from all connected peers.

**Examples** The following example enables auto-summary in Router Configuration mode:

```
awplus# configure
awplus(config)# router bgp 100
awplus(config-router)# auto-summary
```

The following example disables auto-summary in Router Configuration mode:

```
awplus# configure terminal
awplus(config)# router bgp 100
awplus(config-router)# no auto-summary
```

The following example enables auto-summary in Address Family IPv4 mode:

```
awplus# configure terminal
awplus(config)# router bgp 100
awplus(config-router)# address-family ipv4
awplus(config-router-af)# auto-summary
```

The following example disables auto-summary in Address Family IPv4 mode:

```
awplus# configure terminal
awplus(config)# router bgp 100
awplus(config-router)# address-family ipv4
awplus(config-router-af)# no auto-summary
```

**Command changes**

Added to AlliedWare Plus prior to 5.4.6-1

Version 5.4.7-2.1: BGP support added for IEx510, x550 series

Version 5.4.7-2.4: BGP support added for IE300 series

# bgp aggregate-nexthop-check

**Overview**

This command affects the operation of the summary-only option on the aggregate-address command.

This command enables a mode whereby the summary-only option will only suppress the component routes if those component routes all have the same next hop. If the routes have different next hops, then they will continue to be advertised to peers even if the summary-only option is configured. By default this is disabled.

The **no** variant of this command disables this function.

**Syntax**

```
bgp aggregate-nexthop-check
no bgp aggregate-nexthop-check
```

**Default**

Disabled by default.

**Mode**

Global Configuration

**Example**

```
awplus# configure terminal
awplus(config)# bgp aggregate-nexthop-check
```

**Command changes**

Added to AlliedWare Plus prior to 5.4.6-1

Version 5.4.7-2.1: BGP support added for IEx510, x550 series

Version 5.4.7-2.4: BGP support added for IE300 series

# bgp always-compare-med

**Overview**

This command enables BGP to compare the Multi Exit Discriminator (MED) for paths from neighbors in different autonomous systems.

Multi Exit Discriminator (MED) is used in best path selection by BGP. MED is compared after BGP attributes weight, local preference, AS-path and origin have been compared and are equal.

By default, MED comparison is done only among routes from the same autonomous system (AS). Use the **bgp always-compare-mode** command to allow comparison of MEDs from different ASs.

A path with a lower MED value is preferred. For example, if the bgp table contains the following entries, and the **bgp always-compare-med** command has been issued to enable this feature:

- Route1: as-path 400, med 300
- Route2: as-path 200, med 200
- Route3: as-path 400, med 250

Route1 is compared to Route2. Route2 is best of the two (lower MED). Next, Route2 is compared to Route3 and Route2 is chosen best path again (lower MED). If **always-compare-med** was disabled, MED is not taken into account when Route1 and Route2 are compared, because of different ASs and MED is compared for only Route1 and Route3. In this case, Route3 would be the best path. The selected route is also affected by the **bgp deterministic-med** command. See the bgp deterministic-med command for details.

If this command is used to compare MEDs for all paths, it should be configured on every BGP router in the AS.

The **no** variant of this command disallows the comparison.

**Syntax**

```
bgp always-compare-med
no bgp always-compare-med
```

**Default**

By default this feature is disabled.

**Mode**

Router Configuration

**Example**

```
awplus# configure terminal
awplus(config)# router bgp 100
awplus(config-router)# bgp always-compare-med
```

**Related commands**

bgp bestpath med

bgp bestpath as-path ignore

bgp bestpath compare-routerid

bgp deterministic-med

**Command changes**

Added to AlliedWare Plus prior to 5.4.6-1

Version 5.4.7-2.1: BGP support added for IEx510, x550 series

Version 5.4.7-2.4: BGP support added for IE300 series

# bgp bestpath as-path ignore

**Overview**

This command prevents the router from considering as-path as a factor in the algorithm for choosing a route.

The **no** variant of this command allows the router to consider as-path in choosing a route.

**Syntax**

```
bgp bestpath as-path ignore
no bgp bestpath as-path ignore
```

**Mode**

Router Configuration

**Example**

```
awplus# configure terminal
awplus(config)# router bgp 100
awplus(config-router)# bgp bestpath as-path ignore
```

**Related commands**

bgp always-compare-med

bgp bestpath med

bgp bestpath compare-routerid

**Command changes**

Added to AlliedWare Plus prior to 5.4.6-1

Version 5.4.7-2.1: BGP support added for IEx510, x550 series

Version 5.4.7-2.4: BGP support added for IE300 series

# bgp bestpath compare-confed-aspath

**Overview**

This command specifies that the AS confederation path length must be used, when available, in the BGP best path decision process. It is effective only when bgp bestpath as-path ignore command has not been specified.

By default, if BGP receives routes with identical eBGP paths from eBGP peers, BGP does not continue to consider any AS confederation path length attributes that may be associated with the routes.

The **no** variant of this command returns the device to the default state, where the device ignores AS confederation path length in the BGP best path selection process.

**Syntax**

```
bgp bestpath compare-confed-aspath
no bgp bestpath compare-confed-aspath
```

**Mode**

Router Configuration

**Example**

```
awplus# configure terminal
awplus(config)# router bgp 100
awplus(config-router)# bgp bestpath compare-confed-aspath
```

**Related commands**

bgp bestpath as-path ignore

**Command changes**

Added to AlliedWare Plus prior to 5.4.6-1

Version 5.4.7-2.1: BGP support added for IEx510, x550 series

Version 5.4.7-2.4: BGP support added for IE300 series

# bgp bestpath compare-routerid

**Overview**

By default, when comparing similar routes from peers, BGP does not consider the router ID of neighbors advertising the routes - BGP simply selects the first received route. Use this command to include router ID in the selection process; similar routes are compared and the route with the lowest router ID is selected.

The **no** variant of this command disables this feature, and returns the device to the default state, where the device ignores the router ID in the BGP best path selection process.

**Syntax**

```
bgp bestpath compare-routerid
no bgp bestpath compare-routerid
```

**Mode**

Router Configuration

**Example**

```
awplus# configure terminal
awplus(config)# router bgp 100
awplus(config-router)# bgp bestpath compare-routerid
```

**Related commands**

show ip bgp (BGP only)

show bgp ipv6 neighbors (BGP4+ only)

**Command changes**

Added to AlliedWare Plus prior to 5.4.6-1

Version 5.4.7-2.1: BGP support added for IEx510, x550 series

Version 5.4.7-2.4: BGP support added for IE300 series

# bgp bestpath med

**Overview** This command controls how the Multi Exit Discriminator (MED) attribute comparison is performed.

Use the **no** variant of this command to prevent BGP from considering the MED attribute when comparing paths.

**Syntax**

```
bgp bestpath med {[confed] [missing-as-worst]}
```

| Parameter | Description |
|---|---|
| `confed` | Compares MED among confederation paths. |
| `missing-as-worst` | Treats missing MED as the least preferred one. |

**Mode** Router Configuration

**Usage** The **confed** parameter enables MED comparison among paths learned from confederation peers. The MED attributes are compared only if there is no external AS (Autonomous System), where an external AS is one that is not within the confederation. If there is an external AS in the path, then the MED comparison is not made.

For example, in the following paths the MED value is not compared with `Path3` since it is not in the confederation. MED is compared for `Path1` and `Path2` only.

- Path1 = 32000 32004, med=4
- Path2 = 32001 32004, med=2
- Path3 = 32003 1, med=1

The effect of the **missing-as-worst** parameter is to treat a missing MED attribute in a path as having a value of infinity, making the path without a MED value the least desirable path. If the **missing-as-worst** parameter is not configured, the missing MED attribute is assigned the value of 0, making the path with the missing MED attribute the best path.

**Examples**

```
awplus# configure terminal
awplus(config)# router bgp 100
awplus(config-router)# bgp bestpath med missing-as-worst
awplus# configure terminal
awplus(config)# router bgp 100
awplus(config-router)# bgp bestpath med confed
awplus# configure terminal
awplus(config)# router bgp 100
awplus(config-router)# bgp bestpath med confed missing-as-worst
```

**Related commands**

bgp always-compare-med

bgp bestpath as-path ignore

bgp deterministic-med

**Command changes**

Added to AlliedWare Plus prior to 5.4.6-1

Version 5.4.7-2.1: BGP support added for IEx510, x550 series

Version 5.4.7-2.4: BGP support added for IE300 series

# bgp bestpath med remove-recv-med

**Overview**

This command removes the Multi Exit Discriminator (MED) attribute from the update messages received by the BGP speaker from its peers. However, the local BGP speaker will send MED attributes in the update messages to its peers, unless specified not to by the **bgp bestpath med remove-send-med** command.

Use the **no** variant of this command to disable this feature.

**Syntax**

```
bgp bestpath med remove-recv-med
no bgp bestpath med remove-recv-med
```

**Mode**

Router Configuration

**Example**

To enable the **remove-recv-med** feature on the BGP speaker belonging to the Autonomous System (AS) 100, enter the command:

```
awplus# configure terminal
awplus(config)# router bgp 100
awplus(config-router)# bgp bestpath med remove-recv-med
```

**Related commands**

bgp bestpath med remove-send-med

**Command changes**

Added to AlliedWare Plus prior to 5.4.6-1

Version 5.4.7-2.1: BGP support added for IEx510, x550 series

Version 5.4.7-2.4: BGP support added for IE300 series

# bgp bestpath med remove-send-med

**Overview**

This command removes the Multi Exit Discriminator (MED) attribute from the update messages sent by the BGP speaker to its peers. However, the local BGP speaker will consider the MED attribute received from other peers during the decision and route selection process, unless specified not to by the **bgp bestpath med remove-recv-med** command.

Use the **no** variant of this command to disable this feature.

**Syntax**

```
bgp bestpath med remove-send-med
no bgp bestpath med remove-send-med
```

**Mode**

Router Configuration

**Example**

To enable the **remove-send-med** feature on the BGP speaker belonging to the Autonomous System (AS) 100, enter the command:

```
awplus# configure terminal
awplus(config)# router bgp 100
awplus(config-router)# bgp bestpath med remove-send-med
```

**Related commands**

bgp bestpath med remove-recv-med

**Command changes**

Added to AlliedWare Plus prior to 5.4.6-1

Version 5.4.7-2.1: BGP support added for IEx510, x550 series

Version 5.4.7-2.4: BGP support added for IE300 series

# bgp client-to-client reflection

**Overview**

This command restores route reflection from a BGP route reflector to clients, and is used to configure routers as route reflectors. Route reflectors are used when all Interior Border Gateway Protocol (iBGP) speakers are not fully meshed.

If the clients are fully meshed the route reflector is not required, use the **no** variant of this command to disable the client-to-client route reflection.

When a router is configured as a route reflector, client-to-client reflection is enabled by default.

The **no** variant of this command turns off client-to-client reflection.

**Syntax**

```
bgp client-to-client reflection
no bgp client-to-client reflection
```

**Default**

This command is enabled by default.

**Mode**

Router Configuration

**Example**

```
awplus# configure terminal
awplus(config)# router bgp 100
awplus(config-router)# no bgp client-to-client reflection
```

**Related commands**

bgp cluster-id

neighbor route-reflector-client (BGP only)

show bgp ipv6 (BGP4+ only)

show ip bgp (BGP only)

**Command changes**

Added to AlliedWare Plus prior to 5.4.6-1

Version 5.4.7-2.1: BGP support added for IEx510, x550 series

Version 5.4.7-2.4: BGP support added for IE300 series

# bgp cluster-id

**Overview** This command configures the cluster-id if the BGP cluster has more than one route reflector. A cluster includes one or more route reflectors and their clients. Usually, each cluster is identified by the router-id of its single route reflector. However, to increase redundancy, a cluster may sometimes have more than one route reflector. All router reflectors in such a cluster are then identified by a cluster-id.

The **bgp cluster-id** command is used to configure the 4 byte cluster ID for clusters with more than one route reflector.

The **no** variant of this command removes the cluster ID.

**Syntax**

```
bgp cluster-id {<ip-address>|<cluster-id>}
no bgp cluster-id
```

| Parameter | Description | |
|---|---|---|
| *<cluster-id>* | <1-4294967295> | Route Reflector cluster-id as a 32 bit quantity. |
| *<ip-address>* | *A.B.C.D* | Route Reflector Cluster-id in IP address format. |

**Mode** Router Configuration

**Usage** The following configuration creates `cluster-id 5` including two route-reflector- clients.

```
awplus(config)# router bgp 200
awplus(config-router)# neighbor 2.2.2.2 remote-as 200
awplus(config-router)# neighbor 3.3.3.3 remote-as 200
awplus(config-router)# neighbor 3.3.3.3 route-reflector-client
awplus(config-router)# neighbor 5.5.5.5 remote-as 200
awplus(config-router)# neighbor 5.5.5.5 route-reflector-client
awplus(config-router)# neighbor 6.6.6.6 remote-as 200
awplus(config-router)# bgp cluster-id 5
```

**Examples** To add a **bgp cluster-id**, apply the example commands as shown below:

```
awplus# configure terminal
awplus(config)# router bgp 100
awplus(config-router)# bgp cluster-id 10.10.1.1
```

To remove a bgp cluster-id apply the example commands as shown below:

```
awplus# configure terminal
awplus(config)# router bgp 100
awplus(config-router)# no bgp cluster-id 10.10.1.1
```

**Related commands**

bgp client-to-client reflection

neighbor route-reflector-client (BGP only)

show bgp ipv6 (BGP4+ only)

show ip bgp (BGP only)

**Command changes**

Added to AlliedWare Plus prior to 5.4.6-1

Version 5.4.7-2.1: BGP support added for IEx510, x550 series

Version 5.4.7-2.4: BGP support added for IE300 series

# bgp confederation identifier

**Overview**

This command specifies a BGP confederation identifier.

The **no** variant of this command removes all BGP confederation identifiers.

**Syntax**

```
bgp confederation identifier <1-4294967295>
no bgp confederation identifier
```

| Parameter | Description |
|---|---|
| *<1-4294967295>* | Set routing domain confederation AS number. |

**Mode**

Router Configuration

**Examples**

```
awplus# configure terminal
awplus(config)# router bgp 100
awplus(config-router)# bgp confederation identifier 1
awplus# configure terminal
awplus(config)# router bgp 100
awplus(config-router)# no bgp confederation identifier
```

**Related commands**

bgp confederation peers

**Command changes**

Added to AlliedWare Plus prior to 5.4.6-1

Version 5.4.7-2.1: BGP support added for IEx510, x550 series

Version 5.4.7-2.4: BGP support added for IE300 series

# bgp confederation peers

**Overview**

This command configures the Autonomous Systems (AS) that belong to the same confederation as the current device.

A confederation allows an AS to be divided into several sub-ASs. The overall AS is given a confederation identifier. External routers view only the whole confederation as one AS, whose AS number is the confederation identifier. Each sub-AS is fully meshed within itself and is visible internally to the confederation.

Use the **bgp confederation peer** command to define the list of AS numbers of the sub-ASs in the confederation containing the current device.

The **no** variant of this command removes an autonomous system from the confederation.

**Syntax**

```
bgp confederation peers <1-4294967295>
no bgp confederation peers <1-4294967295>
```

| Parameter | Description |
|---|---|
| *<1-4294967295>* | AS numbers of eBGP peers that are under same confederation but in a different sub-AS. |

**Mode**

Router Configuration

**Usage notes**

In the following configuration of **Router 1** the neighbor `172.210.30.2` and `172.210.20.1` have iBGP connection within AS `100`. The neighbor `173.213.30.1` has an BGP connection, but it is within AS `200`, which is part of the same confederation. The neighbor `6.6.6.6` has an eBGP connection to external AS `500`.

In the configuration of **Router 2**, neighbor `5.5.5.4` has an eBGP connection to confederation `300`. `Router2` does not know about the ASs `100` and `200`, it only knows about confederation `300`.

**Router 1**

```
awplus(config)# router bgp 100
awplus(config-router)# bgp confederation identifier 300
awplus(config-router)# bgp confederation peers 200
awplus(config-router)# neighbor 172.210.30.2 remote-as 100
awplus(config-router)# neighbor 172.210.20.1 remote-as 100
awplus(config-router)# neighbor 173.213.30.1 remote-as 200
awplus(config-router)# neighbor 6.6.6.6 remote-as 300
```

**Router 2**

```
awplus(config)# router bgp 500
awplus(config-router)# neighbor 5.5.5.4 remote-as 300
```

**Example**

```
awplus# configure terminal
awplus(config)# router bgp 100
awplus(config-router)# bgp confederation peers 1234
```

**Related commands**

bgp confederation identifier

**Command changes**

Added to AlliedWare Plus prior to 5.4.6-1

Version 5.4.7-2.1: BGP support added for IEx510, x550 series

Version 5.4.7-2.4: BGP support added for IE300 series

# bgp config-type

**Overview** Use this command to set the BGP configuration type to either **standard** or **enhanced** types. When you configure the **enhanced** type, then BGP and BGP4+ communities are allowed to be sent and received by default. The **enhanced** type is configured by default.

Use the **no** variant of this command to restore the default BGP configuration type (**enhanced**).

**Syntax**

```
bgp config-type {standard|enhanced}
no bgp config-type
```

| Parameter | Description |
|---|---|
| `standard` | Specifies the industry standard style configuration. After setting the configuration to standard, make sure to use the neighbor send-community command to send out BGP community attributes. The synchronization command is enabled in the Global Configuration mode and is shown in the configuration. |
| `enhanced` | Specifies the enhanced style configuration. The enhanced configuration type requires no specific configuration for sending out BGP standard community and extended community attributes. The synchronization command is enabled by default in the Global Configuration mode and is not shown in configuration output. |

**Default** By default, the BGP configuration type is **enhanced**.

**Mode** Global Configuration

**Usage notes** Note that the **enhanced** type default configuration may cause issues in some networks if unauthorized BGP peers are advertising BGP communities to adjust routing decisions.

Changing modes requires you to **reload** your device for the change to take effect:

```
awplus(config)#bgp config-type standard
awplus(config)#exit
awplus#reload
reboot system? (y/n): y
```

When your device reloads, it will load with the standard BGP settings commonly used by most vendors. Apply the **standard** type configuration if you have interoperability issues.

**Examples** To specify the `standard` BGP configuration type, enter the following commands:

```
awplus# configure terminal
awplus(config)# bgp config-type standard
```

To specify the enhanced BGP configuration type, enter the following commands:

```
awplus# configure terminal
awplus(config)# bgp config-type enhanced
```

To restore the default BGP configuration type (enhanced), enter the following commands:

```
awplus# configure terminal
awplus(config)# no bgp config-type
```

**Related commands**

neighbor send-community

synchronization

**Command changes**

Added to AlliedWare Plus prior to 5.4.6-1

Version 5.4.7-2.1: BGP support added for IEx510, x550 series

Version 5.4.7-2.4: BGP support added for IE300 series

# bgp dampening

**Overview** This command enables BGP and BGP4+ dampening and sets BGP and BGP4+ dampening parameters. BGP4+ dampening is available from the IPv6 Address Family Configuration mode. BGP dampening is available from the Router Configuration mode.

The **no** variant of this command disables BGP dampening or unsets the BGP dampening parameters.

**Syntax**

```
bgp dampening
no bgp dampening
bgp dampening <reachtime>
no bgp dampening <reachtime>
bgp dampening <reachtime> <reuse> <suppress> <maxsuppress>
<unreachtime>
no bgp dampening <reachtime> <reuse> <suppress> <maxsuppress>
<unreachtime>
bgp dampening route-map <routemap-name>
no bgp dampening route-map <routemap-name>
```

| Parameter | Description |
|---|---|
| *<reachtime>* | <1-45> Specifies the reachability half-life time in minutes. The time for the penalty to decrease to one-half of its current value. The default is 15 minutes. |
| *<reuse>* | <1-20000> Specifies the reuse limit value. When the penalty for a suppressed route decays below the reuse value, the routes become unsuppressed. The default reuse limit is 750 |
| *<suppress>* | <1-20000> Specifies the suppress limit value. When the penalty for a route exceeds the suppress value, the route is suppressed. The default suppress limit is 2000. |
| *<maxsuppress>* | <1-255> Specifies the max-suppress-time. Maximum time that a dampened route is suppressed. The default max-suppress value is 4 times the half-life time (60 minutes). |
| *<unreachtime>* | <1-45> Specifies the un-reachability half-life time for penalty, in minutes. |
| route-map | Route-map to specify criteria for dampening. |
| *<routemap-name>* | Specify the name of the route-map. |

**Mode [BGP]** Router Configuration

**Mode [BGP4+]** IPv6 Address Family Configuration

**Usage notes** Route dampening minimizes the instability caused by route flapping. A penalty is added for every flap in a flapping route. As soon as the total penalty reaches the **suppress** limit the advertisement of the route is suppressed. This penalty is decayed according to the configured **half time** value. Once the penalty is lower than the **reuse** limit, the route advertisement is un-suppressed.

The dampening information is purged from the router once the penalty becomes less than half of the **reuse** limit.

**Example [BGP]**

```
awplus# configure terminal
awplus(config)# router bgp 11
awplus(config-router)# bgp dampening 20 800 2500 80 25
```

**Example [BGP4+]**

```
awplus# configure terminal
awplus(config)# router bgp 11
awplus(config-router)# address-family ipv6
awplus(config-router-af)# bgp dampening 20 800 2500 80 25
```

**Command changes** Added to AlliedWare Plus prior to 5.4.6-1

Version 5.4.7-2.1: BGP support added for IEx510, x550 series

Version 5.4.7-2.4: BGP support added for IE300 series

# bgp damp-peer-oscillation (BGP only)

**Overview**

Use this command to enable BGP peer oscillating connection damping.

Use the **no** variant of this command to disable BGP peer oscillating connection damping.

**Syntax**

```
bgp damp-peer-oscillations
no bgp damp-peer-oscillations
```

**Default**

By default, this functionality is enabled and will not appear in the **show running-config** command output.

**Mode**

Router Configuration

**Usage**

BGP peers in AlliedWare Plus will automatically attempt to form connections with configured neighbors. Due to misconfiguration these connections may fail and continue to fail until such time as the misconfiguration is detected and fixed. During this time, BGP can quickly cycle through the state machine from Idle through the various Connect states, which can result in large numbers of TCP sessions being opened in a short period of time.

This command instead adds a delay after a peer enters the Idle state before it can progress to the later states. The default delay is 0 second, increasing by 1 second for each unsuccessful connection attempt, to a maximum of 5 seconds. After a successful BGP route update has been received over a connection, the delay will be reset to 0. This command implements the DampPeerOscillations FSM behavior described in section 8.1 of RFC 4271.

The command is enabled by default. When disabled, peers will transition out of the Idle state immediately. The command applies globally to all currently configured BGP peers and all future peers to be created.

**Example**

To disable peer connection damping, use the commands:

```
awplus# configure terminal
awplus(config)# router bgp 1
awplus(config-router)# no bgp damp-peer-oscillations
```

**Command changes**

Added to AlliedWare Plus prior to 5.4.6-1

Version 5.4.7-2.1: BGP support added for IEx510, x550 series

Version 5.4.7-2.4: BGP support added for IE300 series

# bgp default ipv4-unicast

**Overview**

This command configures BGP defaults and activates IPv4-unicast for a peer by default. This affects BGP global configuration. By default, BGP exchanges IPv4 prefixes with a peer.

The **no** variant of this command disables this function. The BGP routing process will no longer exchange IPv4 addressing information with BGP neighbor routers. Note that disabling the exchange of IPv4 prefixes will also enable an IPv6 only BGP4+ network.

**Syntax**

```
bgp default ipv4-unicast
no bgp default ipv4-unicast
```

**Default**

This is enabled by default.

**Mode**

Router Configuration

**Usage**

Use the negated form of this command to enable an IPv6 only BGP4+ network.

**Examples**

```
awplus# configure terminal
awplus(config)# router bgp 100
awplus(config-router)# bgp default ipv4-unicast
awplus# configure terminal
awplus(config)# router bgp 100
awplus(config-router)# no bgp default ipv4-unicast
```

**Command changes**

Added to AlliedWare Plus prior to 5.4.6-1

Version 5.4.7-2.1: BGP support added for IEx510, x550 series

Version 5.4.7-2.4: BGP support added for IE300 series

# bgp default local-preference (BGP only)

**Overview**

This command changes the default local preference value.

The local preference indicates the preferred path when there are multiple paths to the same destination. The path with the higher preference is preferred.

Use this command to define the default local preference value that the device will advertise for the routes it sends. The preference is sent to all routers and access servers in the local autonomous system.

The **no** variant of this command reverts to the default local preference value of 100.

**Syntax**

```
bgp default local-preference <pref-value>
no bgp default local-preference [<pref-value>]
```

| Parameter | Description |
|---|---|
| *<pref-value>* | <0-4294967295> Configure default local preference value. The default local preference value is 100. |

**Default**

By default the local-preference value is 100.

**Mode**

Router Configuration

**Examples**

```
awplus# configure terminal
awplus(config)# router bgp 100
awplus(config-router)# bgp default local-preference 2345555
awplus# configure terminal
awplus(config)# router bgp 100
awplus(config-router)# no bgp default local-preference
```

**Command changes**

Added to AlliedWare Plus prior to 5.4.6-1

Version 5.4.7-2.1: BGP support added for IEx510, x550 series

Version 5.4.7-2.4: BGP support added for IE300 series

# bgp deterministic-med

**Overview** Use this command to allow or disallow the device to compare the Multi Exit Discriminator (MED) variable when choosing among routes advertised by different peers in the same autonomous system (AS).

Use the **bgp deterministic-med** command to enable this feature to allow the comparison of MED variables when choosing among routes advertised by different peers in the same AS.

Use the **no** variant of this command to disable this feature to disallow the comparison of the MED variable when choosing among routes advertised by different peers in the same AS.

**Syntax**

```
bgp deterministic-med
no bgp deterministic-med
```

**Default** Disabled

**Mode** Router Configuration

**Usage** When the **bgp deterministic-med** command is enabled, routes from the same AS are grouped together and ordered according to their MED values, and the best routes of each group are compared.

The main benefit of this is that the choice of best route then does not depend on the order in which the routes happened to be received, which is rather random and arbitrary.

To see how this works, consider the following set of bgp table entries, all for the same route:

```
1: ASPATH 234, MED 120, internal, IGP metric to NEXT_HOP 40
2: ASPATH 389, MED 190, internal, IGP metric to NEXT_HOP 35
3: ASPATH 234, MED 245, external
```

If **bgp deterministic-med** is not enabled, then entry 3 will be chosen, because it is an external route.

But if BGP deterministic-MED is enabled, the entries will be grouped as follows:

```
Group 1:  1: ASPATH 234, MED 120, internal, IGP metric to NEXT_HOP 40
          3: ASPATH 234, MED 245, external
Group 2:  2: ASPATH 389, MED 190, internal, IGP metric to NEXT_HOP 35
```

***NOTE:*** *Routes from the same AS are grouped together and ordered by MED.*

Entry `1` is chosen as the best route from `Group 1`, since this route has the lowest MED value. Entry 2 has to be the best route in `Group 2`, since this is the only route in that group. These two group winners are compared against each other, and

Entry 2 is chosen as the best route because Entry 2 has the lower metric to next-hop.

All routers in an AS should have the same setting for BGP deterministic-MED. All routers in an AS should have BGP deterministic-MED enabled with **bgp deterministic-med**, or all routers in an AS should have BGP deterministic-MED disabled with **no bgp-deterministic- med**.

In the example above, the MED values were not considered when comparing the winners of the two groups (the best routes from the different ASs). To use MED in the comparison of routes from different ASs, use the bgp always-compare-med command.

**Examples**

```
awplus# configure terminal
awplus(config)# router bgp 100
awplus(config-router)# bgp deterministic-med
awplus# configure terminal
awplus(config)# router bgp 100
awplus(config-router)# no bgp deterministic-med
```

**Related commands**

show ip bgp (BGP only)

show bgp ipv6 neighbors (BGP4+ only)

show ip bgp neighbors (BGP only)

**Command changes**

Added to AlliedWare Plus prior to 5.4.6-1

Version 5.4.7-2.1: BGP support added for IEx510, x550 series

Version 5.4.7-2.4: BGP support added for IE300 series

# bgp enforce-first-as

**Overview**

Use this command to enforce the denying of eBGP updates in which the neighbor's AS number is not the first AS in the AS-path attribute.

Use the **no** variant of this command to disable this feature.

**Syntax**

```
bgp enforce-first-as
no bgp enforce-first-as
```

**Mode**

Router Configuration

**Usage**

This command specifies that any updates received from an external neighbor that do not have the neighbor's configured Autonomous System (AS) at the beginning of the AS_PATH in the received update must be denied. Enabling this feature adds to the security of the BGP network by not allowing traffic from unauthorized systems.

**Example**

```
awplus# configure terminal
awplus(config)# router bgp 100
awplus(config-router# bgp enforce-first-as
```

**Command changes**

Added to AlliedWare Plus prior to 5.4.6-1

Version 5.4.7-2.1: BGP support added for IEx510, x550 series

Version 5.4.7-2.4: BGP support added for IE300 series

# bgp fast-external-failover

**Overview**

Use this command to reset a BGP session immediately if the interface used for BGP connection goes down.

Use the **no** variant of this command to disable this feature.

**Syntax**

```
bgp fast-external-failover
no bgp fast-external-failover
```

**Default**

Enabled

**Mode**

Router Configuration

**Example**

```
awplus# configure terminal
awplus(config)# router bgp 100
awplus(config-router)# bgp fast-external-failover
```

**Command changes**

Added to AlliedWare Plus prior to 5.4.6-1

Version 5.4.7-2.1: BGP support added for IEx510, x550 series

Version 5.4.7-2.4: BGP support added for IE300 series

# bgp graceful-restart

**Overview** Use this command to enable BGP and BGP4+ graceful-restart capabilities for restart and stalepath times.

Use the **no** variant of this command to restore restart timers to their default settings.

**Syntax**

```
bgp graceful-restart [restart-time <delay-value>|
stalepath-time <delay-value>]
```

```
no bgp graceful-restart [restart-time|stalepath-time]
```

| Parameter | Description |
|---|---|
| `restart-time` | The maximum time needed for neighbors to restart, in seconds.<br>The default restart-time is 120 seconds. |
| `stalepath-time` | The maximum time to retain stale paths from restarting neighbors, in seconds. The default stalepath-time is 120 seconds. |
| `<delay-value>` | <1-3600> Maximum time in seconds. |

**Default** Graceful restart is disabled by default. If you enable it and do not specify the restart-time and stalepath-time, they default to 120 seconds.

**Mode** Router Configuration

**Usage notes** The **restart-time** parameter is used for setting the maximum time that a graceful-restart neighbor waits to come back up after a restart. This **restart-time** value is applied to neighbors unless you explicitly override it by configuring the corresponding value on the neighbor.

The **stalepath-time** parameter is used to set the maximum time to preserve stale paths from a gracefully restarted neighbor. All stalepaths, unless reinstated by the neighbor after a re-establishment, will be deleted when time, as specified by the **stalepath-time** parameter, expires.

**Examples** To enable graceful restart, use the commands:

```
awplus# configure terminal
awplus(config)# router bgp 10
awplus(config-router)# bgp graceful-restart
```

To disable graceful restart, use the commands:

```
awplus# configure terminal
awplus(config)# router bgp 10
awplus(config-router)# no bgp graceful-restart
```

To enable graceful restart and set the restart time to 150 seconds, use the commands:

```
awplus# configure terminal
awplus(config)# router bgp 10
awplus(config-router)# bgp graceful-restart restart-time 150
```

To return the restart-time to its default of 120 seconds, use the commands:

```
awplus# configure terminal
awplus(config)# router bgp 10
awplus(config-router)# no bgp graceful-restart restart-time
```

**Related commands**

bgp graceful-restart graceful-reset

restart bgp graceful (BGP only)

**Command changes**

Added to AlliedWare Plus prior to 5.4.6-1

Version 5.4.7-2.1: BGP support added for IEx510, x550 series

Version 5.4.7-2.4: BGP support added for IE300 series

# bgp graceful-restart graceful-reset

**Overview**

This command enables BGP and BGP4+ graceful-restart when a configuration change forces a peer restart.

Use the **no** variant of this command to restore the device to its default state.

**Syntax**

```
bgp graceful-restart graceful-reset
no bgp graceful-restart graceful-reset
```

**Default**

Disabled

**Mode**

Router Configuration

**Usage**

The bgp graceful-restart command must be enabled before this command is enabled. All events that cause BGP peer reset, including all session reset commands, can trigger graceful-restart.

**Example**

To enable the graceful-restart graceful-reset feature on the BGP or BGP4+ peer belonging to Autonomous System (AS) 10, use the commands:

```
awplus# configure terminal
awplus(config)# router bgp 10
awplus(config-router)# bgp graceful-restart graceful-reset
```

To disable the graceful-restart graceful-reset feature on the BGP or BGP4+ peer belonging to Autonomous System (AS) 10, use the commands:

```
awplus# configure terminal
awplus(config)# router bgp 10
awplus(config-router)# no bgp graceful-restart graceful-reset
```

**Related commands**

bgp graceful-restart

**Command changes**

Added to AlliedWare Plus prior to 5.4.6-1

Version 5.4.7-2.1: BGP support added for IEx510, x550 series

Version 5.4.7-2.4: BGP support added for IE300 series

# bgp log-neighbor-changes

**Overview** Use this command to enable logging of status change messages without turning on **debug bgp** commands.

Use the **no** variant of this command to disable this feature.

**Syntax**

```
bgp log-neighbor-changes
no bgp log-neighbor-changes
```

**Default** Disabled

**Mode** Router Configuration

**Usage notes** AlliedWare Plus™ provides other kinds of logging services for neighbor status, for example, **debug bgp fsm** and **debug bgp events**.

However, these commands create a significant hit in the logging performance. If you need to log neighbor status changes only, we recommend turning off all the debug commands, and then use this command.

To see BGP neighbor changes in the log you must also set the log level to informational using the **log buffered** command.

A sample output of this log is:

```
%Protocol-Severity-Events: Message-text
```

A sample output of the log for an interface down event is:

```
%BGP-5-ADJCHANGE: neighbor 10.10.0.24 Down Interface flap
```

The **bgp log-neighbor-changes** command logs the following events:

- BGP Notification Received
- Erroneous BGP Update Received
- User reset request
- Peer time-out
- Peer Closing down the session
- Interface flap
- Router ID changed
- Neighbor deleted
- Member added to peer group
- Administrative shutdown

- Remote AS changed
- RR client configuration modification
- Soft reconfiguration modification

**Example**

To enable the logging of BGP status changes without using the debug bgp command:

```
awplus# configure terminal
awplus(config)# router bgp 100
awplus(config-router)# bgp log-neighbor-changes
```

**Command changes**

Added to AlliedWare Plus prior to 5.4.6-1

Version 5.4.7-2.1: BGP support added for IEx510, x550 series

Version 5.4.7-2.4: BGP support added for IE300 series

# bgp memory maxallocation

**Overview**

This command allocates a maximum percentage of the RAM (Random Access Memory) available on the device for BGP processes.

When this percentage is exceeded, BGP peering terminates and an **out of resources** error displays. The default setting for **bgp memory maxallocation** is 100% memory allocation.

Use the **no** variant of this command to reset memory allocation to the default.

**Syntax**

```
bgp memory maxallocation <1-100>
no bgp memory maxallocation
```

| Parameter | Description |
|---|---|
| *<1-100>* | Percentage of device memory allocated to BGP processes. Note this is RAM (Random Access Memory), not device flash memory. |

**Default**

BGP processes are allocated the maximum percentage of 100% of the device's available RAM memory by default. Note only non-default BGP memory allocation values are shown in the running or startup configuration files:

```
awplus#show running-config
!
bgp memory maxallocation 50
!
```

**Mode**

Global Configuration

**Examples**

To limit the maximum amount of memory used by BGP processes to 65% of the total RAM memory available on the device, use the commands:

```
awplus# configure terminal
awplus(config)# bgp memory maxallocation 65
```

To return to the default 100% maximum RAM memory allocation available on the device for BGP processes, use the commands:

```
awplus# configure terminal
awplus(config)# no bgp memory maxallocation
```

**Command changes**

Added to AlliedWare Plus prior to 5.4.6-1

Version 5.4.7-2.1: BGP support added for IEx510, x550 series

Version 5.4.7-2.4: BGP support added for IE300 series

# bgp nexthop-trigger-count

**Overview**

Use this command to configure the display of BGP next hop tracking status.

Use the **no** variant of this command to disable this function.

**Syntax**

```
bgp nexthop-trigger-count <0-127>
no bgp nexthop-trigger-count
```

| Parameter | Description |
|---|---|
| *<0-127>* | BGP next hop tracking status. |

**Mode**

Router Configuration

**Example**

To enable next-hop-tracking status on the BGP peer belonging to the Autonomous System (AS) 100, enter the following commands:

```
awplus# configure terminal
awplus(config)# router bgp 100
awplus(config-router)# bgp nexthop-trigger-count 10
```

To disable next-hop-tracking status, enter the following commands:

```
awplus# configure terminal
awplus(config)# router bgp 100
awplus(config-router)# no bgp nexthop-trigger-count
```

**Related commands**

bgp nexthop-trigger delay

bgp nexthop-trigger enable

show bgp nexthop-tracking (BGP only)

**Command changes**

Added to AlliedWare Plus prior to 5.4.6-1

Version 5.4.7-2.1: BGP support added for IEx510, x550 series

Version 5.4.7-2.4: BGP support added for IE300 series

# bgp nexthop-trigger delay

**Overview**

Use this command to set the delay interval for next hop address tracking.

Use the **no** variant of this command to reset the timer value to the default.

**Syntax**

```
bgp nexthop-trigger delay <1-100>
no bgp nexthop-trigger delay
```

| Parameter | Description |
|---|---|
| *<1-100>* | Next hop trigger delay interval in seconds. |

**Default**

The default next hop delay interval is 5 seconds.

**Mode**

Global Configuration

**Usage**

This command configures the delay interval between routing table waits for next hop delay tracking. The delay interval determines how long BGP waits after it receives the trigger from the system about one or more next hop changes before it walks the full BGP table to determine which prefixes are affected by the next hop changes.

**Example**

To set the next hop delay interval to 6 seconds, enter the command:

```
awplus# configure terminal
awplus(config)# bgp nexthop-trigger delay 6
```

**Related commands**

bgp nexthop-trigger-count

bgp nexthop-trigger enable

**Command changes**

Added to AlliedWare Plus prior to 5.4.6-1

Version 5.4.7-2.1: BGP support added for IEx510, x550 series

Version 5.4.7-2.4: BGP support added for IE300 series

# bgp nexthop-trigger enable

**Overview**

Use this command to enable next hop address tracking. If next hop address tracking is enabled and a next hop trigger delay interval has not been explicitly set with the bgp nexthop-trigger delay command, the default delay interval of 5 seconds is used.

Use the **no** variant of this command to disable this feature.

**Syntax**

```
bgp nexthop-trigger enable
no bgp nexthop-trigger enable
```

**Default**

Disabled.

**Mode**

Global Configuration

**Usage**

Next hop address tracking is an event driven notification system that monitors the status of routes installed in the Routing Information Base (RIB) and reports next hop changes that affect internal BGP (iBGP) or external BGP (eBGP) prefixes directly to the BGP process. This improves the overall BGP convergence time, by allowing BGP to respond rapidly to next hop changes for routes installed in the RIB.

If next hop tracking is enabled after certain routes are learned, the registration of all the next hops of selected BGP routes are done immediately after the next hop tracking feature is enabled.

If next hop tracking is disabled, and if there are still some selected BGP routes, BGP deregisters the next hops of all of the selected BGP routes from the system.

If next hop tracking is disabled when next hop tracking is in the process of execution, an error appears, and next hop tracking is not disabled. However, if the next hop tracking timer is running at the time of negation, the next hop tracking timer is stopped, and next hop tracking is disabled.

**Example**

To enable next hop address tracking, enter the command:

```
awplus# configure terminal
awplus(config)# bgp nexthop-trigger enable
```

**Related commands**

bgp nexthop-trigger-count

bgp nexthop-trigger delay

show bgp nexthop-tracking (BGP only)

**Command changes**

Added to AlliedWare Plus prior to 5.4.6-1

Version 5.4.7-2.1: BGP support added for IEx510, x550 series

Version 5.4.7-2.4: BGP support added for IE300 series

# bgp rfc1771-path-select (BGP only)

**Overview** Use this command to set the RFC1771 compatible path selection mechanism.

Use the **no** variant of this command to revert this setting.

**Syntax**

```
bgp rfc1771-path-select
no bgp rfc1771-path-select
```

**Default** Industry standard compatible path selection mechanism.

**Mode** Global Configuration

**Example**

```
awplus# configure terminal
awplus(config)# bgp rfc1771-path-select
```

**Command changes** Added to AlliedWare Plus prior to 5.4.6-1

Version 5.4.7-2.1: BGP support added for IEx510, x550 series

Version 5.4.7-2.4: BGP support added for IE300 series

# bgp rfc1771-strict (BGP only)

**Overview** Use this command to set the Strict RFC1771 setting.

Use the **no** variant of this command to revert this setting.

**Syntax**

```
bgp rfc1771-strict
no bgp rfc1771-strict
```

**Default** Disabled

**Mode** Global Configuration

**Example**

```
awplus# configure terminal
awplus(config)# bgp rfc1771-strict
```

**Command changes** Added to AlliedWare Plus prior to 5.4.6-1

Version 5.4.7-2.1: BGP support added for IEx510, x550 series

Version 5.4.7-2.4: BGP support added for IE300 series

# bgp router-id

**Overview** Use this command to configure the router identifier. The IPv4 address specified in this command does not have to be an IPv4 address that is configured on any of the interfaces on the device. Note that you must specify an IPv4 address with this when used for BGP4+.

Use the **no** variant of this command to return the router-id to its default value (as described in Default below).

**Syntax**

```
bgp router-id <routerid>
no bgp router-id [<routerid>]
```

| Parameter | Description |
|---|---|
| *<routerid>* | Specify the IPv4 address without mask for a manually configured router ID, in the format `A.B.C.D`. |

**Default** If the BGP router ID is not specified, the IPv4 address of the loopback interface is used. When there is no address on the loopback interface, the highest IP address among the VLAN interfaces is used. Note that devices that have an Ethernet management interface will not use that eth interface's IP address as a router ID.

**Mode [BGP]** Router Configuration or IPv4 Address Family Configuration

**Mode [BGP4+]** Router Configuration

**Usage** Use the **bgp router-id** command to manually configure a fixed router ID as a BGP or BGP4+ router identifier. This router ID takes precedence over all other possible router ID sources. The order of precedence is:

1) router ID configured with this command
2) IP address of the loopback interface
3) highest IP address from the VLAN interfaces

**Examples** To configure a router ID with an IPv4 address for a BGP or BGP4+ router identifier, enter the commands listed below:

```
awplus# configure terminal
awplus(config)# router bgp 100
awplus(config-router)# bgp router-id 1.1.2.3
```

To disable the router ID for a BGP or BGP4+ router identifier enter the commands listed below:

```
awplus# configure terminal
awplus(config)# router bgp 100
awplus(config-router)# no bgp router-id
```

**Command changes**

Added to AlliedWare Plus prior to 5.4.6-1

Version 5.4.7-2.1: BGP support added for IEx510, x550 series

Version 5.4.7-2.4: BGP support added for IE300 series

# bgp scan-time (BGP only)

**Overview** Use this command to set the interval for BGP route next-hop scanning.

Use the **no** variant of this command to disable this function.

**Syntax**

```
bgp scan-time <time>
no bgp scan-time [<time>]
```

| Parameter | Description |
|---|---|
| *<time>* | <0-60> Scanning interval in seconds. |

**Default** The default scanning interval is 60 seconds.

**Mode** Router Configuration

**Usage** Use this command to configure scanning intervals of BGP routers. This interval is the period after which router checks the validity of the routes in its database.

To disable BGP scanning, set the scan time interval to 0 seconds.

**Example**

```
awplus# configure terminal
awplus(config)# router bgp 100
awplus(config-router)# bgp scan-time 10
```

**Command changes** Added to AlliedWare Plus prior to 5.4.6-1

Version 5.4.7-2.1: BGP support added for IEx510, x550 series

Version 5.4.7-2.4: BGP support added for IE300 series

# bgp update-delay

**Overview** Use this command to specify the update-delay value for a graceful-restart capable router.

Use the **no** variant of this command to revert to the default update-delay value.

**Syntax**

```
bgp update-delay <1-3600>
no bgp update-delay [<1-3600>]
```

| Parameter | Description |
|---|---|
| *<1-3600>* | Delay value in seconds. |

**Default** The default update-delay value is 120 seconds.

**Mode** Router Configuration

**Usage** The update-delay value is the maximum time a graceful-restart capable router which is restarting will defer route-selection and advertisements to all its graceful-restart capable neighbors. This maximum time starts from the instance the first neighbor attains established state after restart. The restarting router prematurely terminates this timer when end-of-rib markers are received from all its graceful-restart capable neighbors.

**Example**

```
awplus# configure terminal
awplus(config)# router bgp 10
awplus(config-router)# bgp update-delay 345
```

**Command changes** Added to AlliedWare Plus prior to 5.4.6-1

Version 5.4.7-2.1: BGP support added for IEx510, x550 series

Version 5.4.7-2.4: BGP support added for IE300 series

# clear bgp *

**Overview** Use this command to reset the BGP and BGP4+ connections for all peers.

**Syntax**

```
clear bgp *
clear bgp * in [prefix-filter]
clear bgp * out
clear bgp * soft [in|out]
```

| Parameter | Description |
|---|---|
| * | Clears all BGP and BGP4+ peers. |
| in | Indicates that incoming advertised routes will be cleared. |
| prefix-filter | Specifies that a prefix-list will be sent, by the ORF mechanism, to those neighbors with which the ORF capability has been negotiated. The neighbors will be triggered to resend updates, which match the prefix-list filter, to the local router. The local router will then perform a soft reconfiguration. |
| out | Indicates that outgoing advertised routes will be cleared. |
| soft in | Soft inbound reset causes the neighbors to resend all their updates to the local device, without resetting the connection or clearing the entries in the local device. So, the local device stores new updates, and uses them to systematically replace existing table entries. This process can use a considerable amount of memory. |
| soft out | Soft outbound reset causes the device to simply resend all its updates to the specified neighbor(s), without resetting the connection, or clearing table entries. |

**Mode** Privileged Exec

**Examples**

```
awplus# clear bgp * soft in
awplus# clear bgp * in prefix-filter
```

**Command changes** Added to AlliedWare Plus prior to 5.4.6-1

Version 5.4.7-2.1: BGP support added for IEx510, x550 series

Version 5.4.7-2.4: BGP support added for IE300 series

# clear bgp (IPv4 or IPv6 address)

**Overview** Use this command to reset the BGP and BGP4+ connections for specified peers.

When VRF-lite is configured, you can apply this command to a specific VRF instance. This command resets all BGP connections from any address family (from either IPv4 or IPv6 Address Families).

**Syntax [BGP]**

```
clear bgp <ip-addr>
clear bgp <ip-addr> in [prefix-filter]
clear bgp <ip-addr> out
clear bgp <ip-addr> soft [in|out]
```

**Syntax (VRF-lite)**

```
clear ip bgp <ip-addr> [vrf <vrf-name>] [in|out|soft [in|out]]
```

**Syntax [BGP4+]**

```
clear bgp <ipv6-addr>
clear bgp <ipv6-addr> in [prefix-filter]
clear bgp <ipv6-addr> out
clear bgp <ipv6-addr> soft [in|out]
```

| Parameter | Description |
|---|---|
| *<ip-addr>* | Specifies the IPv4 address of the neighbor whose connection is to be reset, entered in the form A.B.C.D. |
| *<ipv6-addr>* | Specifies the IPv6 address of the neighbor whose connection is to be reset, entered in hexadecimal in the format X:X::X:X. |
| `in` | Indicates that incoming advertised routes will be cleared. |
| `prefix-filter` | Specifies that a prefix-list will be sent, by the ORF mechanism, to those neighbors with which the ORF capability has been negotiated. The neighbors will be triggered to resend updates, which match the prefix-list filter, to the local router. The local router will then perform a soft reconfiguration. |
| `out` | Indicates that outgoing advertised routes will be cleared. |
| `soft in` | Soft inbound reset causes the neighbors to resend all their updates to the local device, without resetting the connection or clearing the entries in the local device. So, the local device stores new updates, and uses them to systematically replace existing table entries. This process can use a considerable amount of memory. |
| `soft out` | Soft outbound reset causes the device to simply resend all its updates to the specified neighbor(s), without resetting the connection, or clearing table entries. |
| `vrf` | Applies the command to the specified VRF instance. |
| *<vrf-name>* | The name of the VRF instance. |

**Mode** Privileged Exec

**Examples [BGP]**

```
awplus# clear bgp 3.3.3.3 soft in prefix-filter
awplus# clear bgp 2.2.2.2 out
```

**Example (VRF-lite)** To apply the above example to clear the BGP connection to peer at IP address 192.0.2.11 for the VRF instance blue, use the following commands:

```
awplus# clear bgp 192.0.2.11 vrf blue in
```

**Examples [BGP4+]**

```
awplus# clear bgp 2001:0db8:010d::1 soft in prefix-filter
awplus# clear bgp 2001:0db8:010d::1 out
```

**Related commands** clear bgp (IPv4 or IPv6 address)

**Command changes** Added to AlliedWare Plus prior to 5.4.6-1

Version 5.4.6-2.1: VRF-lite support added to BGP for AR-series products

Version 5.4.7-2.1: BGP support added for IEx510, x550 series

Version 5.4.7-2.4: BGP support added for IE300 series

# clear bgp (ASN)

**Overview** Use this command to reset the BGP and BGP4+ connections for peers in the specified Autonomous System Number (ASN).

**Syntax**

```
clear bgp <asn> [in [prefix-filter]|out|soft [in|out]]
```

| Parameter | Description |
|---|---|
| `<asn>` | `<1-4294967295>`<br>The AS Number for which all routes will be cleared. |
| `in` | Indicates that incoming advertised routes will be cleared. |
| `prefix-filter` | Specifies that a prefix-list will be sent, by the ORF mechanism, to those neighbors with which the ORF capability has been negotiated. The neighbors will be triggered to resend updates, which match the prefix-list filter, to the local router. The local router will then perform a soft reconfiguration. |
| `out` | Indicates that outgoing advertised routes will be cleared. |
| `soft in` | Soft inbound reset causes the neighbors to resend all their updates to the local device, without resetting the connection or clearing the entries in the local device. So, the local device stores new updates, and uses them to systematically replace existing table entries. This process can use a considerable amount of memory. |
| `soft out` | Soft outbound reset causes the device to simply resend all its updates to the specified neighbor(s), without resetting the connection, or clearing table entries. |

**Mode** Privileged Exec

**Examples**

```
awplus# clear bgp 300 soft in prefix-filter
awplus# clear bgp 500 soft out
awplus# clear bgp 300 soft in
awplus# clear bgp 1 in prefix-filter
```

**Command changes** Added to AlliedWare Plus prior to 5.4.6-1

Version 5.4.7-2.1: BGP support added for IEx510, x550 series

Version 5.4.7-2.4: BGP support added for IE300 series

# clear bgp external

**Overview** Use this command to reset the BGP and BGP4+ connections for all external peers.

**Syntax**

```
clear bgp external [in [prefix-filter]|out|soft [in|out]]
```

| Parameter | Description |
|---|---|
| `external` | Clears all external peers. |
| `in` | Indicates that incoming advertised routes will be cleared. |
| `prefix-filter` | Specifies that a prefix-list will be sent, by the ORF mechanism, to those neighbors with which the ORF capability has been negotiated. The neighbors will be triggered to resend updates, which match the prefix-list filter, to the local router. The local router will then perform a soft reconfiguration. |
| `out` | Indicates that outgoing advertised routes will be cleared. |
| `soft in` | Soft inbound reset causes the neighbors to resend all their updates to the local device, without resetting the connection or clearing the entries in the local device. So, the local device stores new updates, and uses them to systematically replace existing table entries. This process can use a considerable amount of memory. |
| `soft out` | Soft outbound reset causes the device to simply resend all its updates to the specified neighbor(s), without resetting the connection, or clearing table entries. |

**Mode** Privileged Exec

**Examples**

```
awplus# clear bgp external soft in
awplus# clear bgp external in prefix-filter
```

**Command changes** Added to AlliedWare Plus prior to 5.4.6-1

Version 5.4.7-2.1: BGP support added for IEx510, x550 series

Version 5.4.7-2.4: BGP support added for IE300 series

# clear bgp peer-group

**Overview** Use this command to reset the BGP and BGP4+ connections for all members of a peer group.

**Syntax**

```
clear bgp peer-group <peer-group> [in [prefix-filter]|out|soft [in|out]]
```

| Parameter | Description |
|---|---|
| `peer-group` | Clears all members of a peer group. |
| `<peer-group>` | Name of the BGP peer group |
| `in` | Indicates that incoming advertised routes will be cleared. |
| `prefix-filter` | Specifies that a prefix-list will be sent, by the ORF mechanism, to those neighbors with which the ORF capability has been negotiated. The neighbors will be triggered to resend updates, which match the prefix-list filter, to the local router. The local router will then perform a soft reconfiguration. |
| `out` | Indicates that outgoing advertised routes will be cleared. |
| `soft in` | Soft inbound reset causes the neighbors to resend all their updates to the local device, without resetting the connection or clearing the entries in the local device. So, the local device stores new updates, and uses them to systematically replace existing table entries. This process can use a considerable amount of memory. |
| `soft out` | Soft outbound reset causes the device to simply resend all its updates to the specified neighbor(s), without resetting the connection, or clearing table entries. |

**Mode** Privileged Exec

**Examples**

```
awplus# clear bgp peer-group P1 soft in
awplus# clear bgp peer-group P2 in
```

**Command changes** Added to AlliedWare Plus prior to 5.4.6-1

Version 5.4.7-2.1: BGP support added for IEx510, x550 series

Version 5.4.7-2.4: BGP support added for IE300 series

# clear bgp ipv6 (ipv6 address) (BGP4+ only)

**Overview** Use this command to reset the IPv6 BGP4+ connection to the peer specified by the IP address.

**Syntax**

```
clear bgp ipv6 <ipv6-addr> [in [prefix-filter]|out|soft
[in|out]]
```

| Parameter | Description |
|---|---|
| *<ipv6-addr>* | Specifies the IPv6 address of the neighbor whose connection is to be reset, entered in hexadecimal in the format X:X::X:X. |
| `ipv6` | Clears all IPv6 address family peers. Configure parameters relating to the BGP4+ exchange of IPv6 prefixes. |
| `in` | Indicates that incoming advertised routes will be cleared. |
| `prefix-filter` | Specifies that a prefix-list will be sent, by the ORF mechanism, to those neighbors with which the ORF capability has been negotiated. The neighbors will be triggered to resend updates, which match the prefix-list filter, to the local router. The local router will then perform a soft reconfiguration. |
| `out` | Indicates that outgoing advertised routes will be cleared. |
| `soft in` | Soft inbound reset causes the neighbors to resend all their updates to the local device, without resetting the connection or clearing the entries in the local device. So, the local device stores new updates, and uses them to systematically replace existing table entries. This process can use a considerable amount of memory. |
| `soft out` | Soft outbound reset causes the device to simply resend all its updates to the specified neighbor(s), without resetting the connection, or clearing table entries. |

**Mode** Privileged Exec

**Examples** Use the following command to clear the BGP4+ connection to peer at IPv6 address 2001:0db8:010d::1, and clearing all incoming routes.

```
awplus# clear ip bgp 2001:0db8:010d::1 in
```

**Command changes** Added to AlliedWare Plus prior to 5.4.6-1

Version 5.4.7-2.1: BGP support added for IEx510, x550 series

Version 5.4.7-2.4: BGP support added for IE300 series

# clear bgp ipv6 dampening (BGP4+ only)

**Overview** Use this command to clear route dampening information and unsuppress routes that have been suppressed routes.

**Syntax**

```
clear bgp ipv6 dampening
[<ipv6-addr>|<ipv6-addr/prefix-length>]
```

| Parameter | Description |
|---|---|
| *<ipv6-addr>* | Specifies the IPv6 address for which BGP4+ dampening is to be cleared, entered in hexadecimal in the format X:X::X:X. |
| *<ipv6-addr/prefix-length>* | Specifies the IPv6 address and prefix-length for which BGP4+ dampening is to be cleared. The IPv6 address uses the format X:X::X:X/Prefix-Length. The prefix-length is usually set between 0 and 64. |

**Mode** Privileged Exec

**Examples**

```
awplus# clear bgp ipv6 dampening 2001:0db8:010d::1
awplus# clear bgp ipv6 dampening 2001:0db8::/64
```

**Command changes** Added to AlliedWare Plus prior to 5.4.6-1

Version 5.4.7-2.1: BGP support added for IEx510, x550 series

Version 5.4.7-2.4: BGP support added for IE300 series

# clear bgp ipv6 flap-statistics (BGP4+ only)

**Overview** Use this command to clear the flap count and history duration for the specified prefixes.

**Syntax**

```
clear bgp ipv6 flap-statistics
[<ipv6-addr>|<ipv6-addr/prefix-length>]
```

| Parameter | Description |
|---|---|
| *<ipv6-addr>* | Specifies the IPv6 address for which BGP4+ flap count and history duration are to be cleared, entered in hexadecimal in the format X:X::X:X. |
| *<ipv6-addr/prefix-length>* | Specifies the IPv6 address with prefix length for which BGP4+ flap count and history duration are to be cleared. The IPv6 address uses the format X:X::X:X/Prefix-Length. The prefix-length is usually set between 0 and 64. |

**Mode** Privileged Exec

**Examples**

```
awplus# clear bgp ipv6 flap-statistics 2001:0db8:010d::1
awplus# clear bgp ipv6 flap-statistics 2001:0db8::/64
```

**Command changes** Added to AlliedWare Plus prior to 5.4.6-1

Version 5.4.7-2.1: BGP support added for IEx510, x550 series

Version 5.4.7-2.4: BGP support added for IE300 series

# clear bgp ipv6 (ASN) (BGP4+ only)

**Overview** Use this command to reset the BGP4+ connections to all peers in a specified Autonomous System Number (ASN).

**Syntax**

```
clear bgp ipv6 <asn> [in [prefix-filter]|out|soft [in|out]]
clear bgp ipv6 <asn>
clear bgp ipv6 <asn> in [prefix-filter]
clear bgp ipv6 <asn> out
clear bgp ipv6 <asn> soft [in|out]
```

| Parameter | Description |
|---|---|
| *<asn>* | <1-4294967295><br>Specifies the ASN for which all routes will be cleared. |
| `in` | Indicates that incoming advertised routes will be cleared. |
| `prefix-filter` | Specifies that a prefix-list will be sent, by the ORF mechanism, to those neighbors with which the ORF capability has been negotiated. The neighbors will be triggered to resend updates, which match the prefix-list filter, to the local router. The local router will then perform a soft reconfiguration. |
| `out` | Indicates that outgoing advertised routes will be cleared. |
| `soft in` | Soft inbound reset causes the neighbors to resend all their updates to the local device, without resetting the connection or clearing the entries in the local device. So, the local device stores new updates, and uses them to systematically replace existing table entries. This process can use a considerable amount of memory. |
| `soft out` | Soft outbound reset causes the device to simply resend all its updates to the specified neighbor(s), without resetting the connection, or clearing table entries. |

**Mode** Privileged Exec

**Examples**

```
awplus# clear bgp ipv6 100
awplus# clear bgp ipv6 100 in
awplus# clear bgp ipv6 100 in prefix-filter
awplus# clear bgp ipv6 100 out
awplus# clear bgp ipv6 100 soft out
awplus# clear bgp ipv6 100 soft in
```

**Command changes** Added to AlliedWare Plus prior to 5.4.6-1

Version 5.4.7-2.1: BGP support added for IEx510, x550 series

Version 5.4.7-2.4: BGP support added for IE300 series

# clear bgp ipv6 external (BGP4+ only)

**Overview** Use this command to reset the BGP4+ connections to all external peers.

**Syntax**

```
clear bgp ipv6 external [in [prefix-filter]|out|soft [in|out]]
clear bgp ipv6 external
clear bgp ipv6 external in [prefix-filter]
clear bgp ipv6 external out
clear bgp ipv6 external soft [in|out]
```

| Parameter | Description |
|---|---|
| `external` | Clears all external peers. |
| `in` | Indicates that incoming advertised routes will be cleared. |
| `prefix-filter` | Specifies that a prefix-list will be sent, by the ORF mechanism, to those neighbors with which the ORF capability has been negotiated. The neighbors will be triggered to resend updates, which match the prefix-list filter, to the local router. The local router will then perform a soft reconfiguration. |
| `out` | Indicates that outgoing advertised routes will be cleared. |
| `soft in` | Soft inbound reset causes the neighbors to resend all their updates to the local device, without resetting the connection or clearing the entries in the local device. So, the local device stores new updates, and uses them to systematically replace existing table entries. This process can use a considerable amount of memory. |
| `soft out` | Soft outbound reset causes the device to simply resend all its updates to the specified neighbor(s), without resetting the connection, or clearing table entries. |

**Mode** Privileged Exec

**Examples**

```
awplus# clear bgp ipv6 external in
awplus# clear bgp ipv6 external in prefix
awplus# clear bgp ipv6 external out
awplus# clear bgp ipv6 external soft out
awplus# clear bgp ipv6 external soft in
```

**Command changes** Added to AlliedWare Plus prior to 5.4.6-1

Version 5.4.7-2.1: BGP support added for IEx510, x550 series

Version 5.4.7-2.4: BGP support added for IE300 series

# clear bgp ipv6 peer-group (BGP4+ only)

**Overview** Use this command to reset the BGP4+ connections to all members of a peer group.

**Syntax**

```
clear bgp ipv6 peer-group <peer-name>
clear bgp ipv6 peer-group <peer-name> in [prefix-filter]
clear bgp ipv6 peer-group <peer-name> out
clear bgp ipv6 peer-group <peer-name> soft [in|out]
```

| Parameter | Description |
|---|---|
| `peer-group` | Clears all members of a peer group. |
| *<peer-name>* | Specifies the name of the peer group for which all members will be cleared. |
| `ipv6` | Clears all IPv6 address family peers. Configure parameters relating to the BGP4+ exchange of IPv6 prefixes. |
| `in` | Indicates that incoming advertised routes will be cleared. |
| `prefix-filter` | Specifies that a prefix-list will be sent, by the ORF mechanism, to those neighbors with which the ORF capability has been negotiated. The neighbors will be triggered to resend updates, which match the prefix-list filter, to the local router. The local router will then perform a soft reconfiguration. |
| `out` | Indicates that outgoing advertised routes will be cleared. |
| `soft in` | Soft inbound reset causes the neighbors to resend all their updates to the local device, without resetting the connection or clearing the entries in the local device. So, the local device stores new updates, and uses them to systematically replace existing table entries. This process can use a considerable amount of memory. |
| `soft out` | Soft outbound reset causes the device to simply resend all its updates to the specified neighbor(s), without resetting the connection, or clearing table entries. |

**Mode** Privileged Exec

**Example**

```
awplus# clear bgp ipv6 peer-group Peer1 out
```

**Command changes** Added to AlliedWare Plus prior to 5.4.6-1

Version 5.4.7-2.1: BGP support added for IEx510, x550 series

Version 5.4.7-2.4: BGP support added for IE300 series

# clear ip bgp * (BGP only)

**Overview** Use this command to reset all BGP connections, either by fully resetting sessions or by performing soft resets.

If VRF-lite is configured, you can reset BGP connections for all VRF instances or for a specified VRF instance.

**Syntax**

```
clear ip bgp *
clear ip bgp * in
clear ip bgp * out
clear ip bgp * soft [in|out]
clear ip bgp * in [prefix-filter]
```

**Syntax (VRF-lite)**

```
clear ip bgp * [vrf <vrf-name>]
clear ip bgp * [vrf <vrf-name>] in
clear ip bgp * [vrf <vrf-name>] out
clear ip bgp * [vrf <vrf-name>] soft [in|out]
clear ip bgp * in [prefix-filter]
```

| Parameter | Description |
|---|---|
| * | Clears all BGP peers. |
| in | Indicates that incoming advertised routes will be cleared. |
| prefix-filter | Specifies that a prefix-list will be sent, by the ORF mechanism, to those neighbors with which the ORF capability has been negotiated. The neighbors will be triggered to resend updates, which match the prefix-list filter, to the local router. The local router will then perform a soft reconfiguration. |
| out | Indicates that outgoing advertised routes will be cleared. |
| soft in | Soft inbound reset causes the neighbors to resend all their updates to the local device, without resetting the connection or clearing the entries in the local device. So, the local device stores new updates, and uses them to systematically replace existing table entries. This process can use a considerable amount of memory. |
| soft out | Soft outbound reset causes the device to simply resend all its updates to the specified neighbor(s), without resetting the connection, or clearing table entries. |
| vrf | Applies the command to the specified VRF instance. |
| *<vrf-name>* | The name of the VRF instance. |

**Mode** Privileged Exec

**Examples**

To clear all BGP peers, use the command:

```
awplus# clear ip bgp *
```

**Example (VRF-lite)**

To clear all BGP peers in VRF instance red, use the command:

```
awplus# clear ip bgp * vrf red
```

To clear all outbound BGP peers in VRF instance red, use the command:

```
awplus# clear ip bgp * out vrf red
```

**Command changes**

Added to AlliedWare Plus prior to 5.4.6-1

Version 5.4.6-2.1: VRF-lite support added to BGP for AR-series products

Version 5.4.7-2.1: BGP support added for IEx510, x550 series

Version 5.4.7-2.4: BGP support added for IE300 series

# clear ip bgp (IPv4) (BGP only)

**Overview** Use this command to reset the IPv4 BGP connection to the peer specified by the IP address. When VRF-lite is configured, you can apply this command to a specific VRF instance.

**Syntax [BGP]**

```
clear ip bgp <ipv4-addr> [in [prefix-filter]|out|soft [in|out]]
```

**Syntax (VRF-lite)**

```
clear ip bgp <ipv4-address> [vrf <vrf-name>] [in|out|soft
[in|out]]
```

| Parameter | Description |
|---|---|
| *<ipv4-addr>* | Specifies the IPv4 address of the neighbor whose connection is to be reset, entered in the form A.B.C.D. |
| `in` | Indicates that incoming advertised routes will be cleared. |
| `prefix-filter` | Specifies that a prefix-list will be sent, by the ORF mechanism, to those neighbors with which the ORF capability has been negotiated. The neighbors will be triggered to resend updates, which match the prefix-list filter, to the local router. The local router will then perform a soft reconfiguration. |
| `out` | Indicates that outgoing advertised routes will be cleared. |
| `soft in` | Soft inbound reset causes the neighbors to resend all their updates to the local switch, without resetting the connection or clearing the entries in the local switch. So, the local switch stores new updates, and uses them to systematically replace existing table entries. This process can use a considerable amount of memory. |
| `soft out` | Soft outbound reset causes the switch to simply resend all its updates to the specified neighbor(s), without resetting the connection, or clearing table entries. |
| `vrf` | Applies the command to the specified VRF instance. |
| *<vrf-name>* | The name of the VRF instance. |

**Mode [BGP]** Privileged Exec

**Examples [BGP]** To clear the BGP connection to the peer at IPv4 address 192.168.1.1 and clear all incoming routes, use the following command:

```
awplus# clear ip bgp 192.168.1.1 in
```

To apply the above example to clear the BGP connection to the peer at IP address 192.0.2.11 for the VRF instance blue, use the following commands:

```
awplus# clear ip bgp 192.0.2.11 vrf blue in
```

**Command changes** Added to AlliedWare Plus prior to 5.4.6-1

Version 5.4.6-2.1: VRF-lite support added to BGP for AR-series products

Version 5.4.7-2.1: BGP support added for IEx510, x550 series

Version 5.4.7-2.4: BGP support added for IE300 series

# clear ip bgp dampening (BGP only)

**Overview** Use this command to clear route dampening information and unsuppress routes that have been suppressed.

**Syntax**

```
clear ip bgp dampening [<ip-address>|<ip-address/m>]
```

| Parameter | Description |
|---|---|
| *<ip-address>* | Specifies the IPv4 address for which BGP dampening is to be cleared, in dotted decimal format. |
| *<ip-address/m>* | Specifies the IPv4 address with mask for which BGP dampening is to be cleared, entered in the form A.B.C.D/M. Where M is the subnet mask |
| ipv4 | Clears all IPv4 address family peers. Configure parameters relating to the BGP exchange of IPv4 prefixes. |

**Mode** Privileged Exec

**Examples**

```
awplus# clear ip bgp dampening 10.10.0.121
```

**Command changes** Added to AlliedWare Plus prior to 5.4.6-1

Version 5.4.7-2.1: BGP support added for IEx510, x550 series

Version 5.4.7-2.4: BGP support added for IE300 series

# clear ip bgp flap-statistics (BGP only)

**Overview** Use this command to clear the flap count and history duration for the specified prefixes.

**Syntax** `clear ip bgp flap-statistics [<ip-address>|<ip-address/m>]`

| Parameter | Description |
|---|---|
| *<ip-address>* | Specifies the IPv4 address for which BGP flap count and history duration are to be cleared. |
| *<ip-address/m>* | Specifies the IPv4 address with mask for which BGP flap count and history duration are to be cleared. |
| `ipv4` | Clears all IPv4 address family peers. Configure parameters relating to the BGP exchange of IPv4 prefixes. |

**Mode** Privileged Exec

**Examples**
```
awplus# clear ip bgp flap-statistics 10.10.0.121
```

**Command changes** Added to AlliedWare Plus prior to 5.4.6-1

Version 5.4.7-2.1: BGP support added for IEx510, x550 series

Version 5.4.7-2.4: BGP support added for IE300 series

# clear ip bgp (ASN) (BGP only)

**Overview** Use this command to reset the BGP connections to all peers in a specified Autonomous System Number (ASN).

**Syntax**

```
clear ip bgp <asn> [in [prefix-filter]|out|soft [in|out]]
clear ip bgp <asn> ipv4
clear ip bgp <asn> ipv4 in [prefix-filter]
clear ip bgp <asn> ipv4 out
clear ip bgp <asn> ipv4 soft [in|out]
```

| Parameter | Description |
|---|---|
| *<asn>* | <1-4294967295><br>Specifies the ASN for which all routes will be cleared. |
| `ipv4` | Clears all IPv4 address family peers. Configure parameters relating to the BGP exchange of IPv4 prefixes. |
| `in` | Indicates that incoming advertised routes will be cleared. |
| `prefix-filter` | Specifies that a prefix-list will be sent, by the ORF mechanism, to those neighbors with which the ORF capability has been negotiated. The neighbors will be triggered to resend updates, which match the prefix-list filter, to the local router. The local router will then perform a soft reconfiguration. |
| `out` | Indicates that outgoing advertised routes will be cleared. |
| `soft in` | Soft inbound reset causes the neighbors to resend all their updates to the local device, without resetting the connection or clearing the entries in the local device. So, the local device stores new updates, and uses them to systematically replace existing table entries. This process can use a considerable amount of memory. |
| `soft out` | Soft outbound reset causes the device to simply resend all its updates to the specified neighbor(s), without resetting the connection, or clearing table entries. |

**Mode** Privileged Exec

**Examples**

```
awplus# clear ip bgp 100
```

**Command changes** Added to AlliedWare Plus prior to 5.4.6-1

Version 5.4.7-2.1: BGP support added for IEx510, x550 series

Version 5.4.7-2.4: BGP support added for IE300 series

# clear ip bgp external (BGP only)

**Overview** Use this command to reset the BGP connections to all external peers.

**Syntax**

```
clear ip bgp external [in [prefix-filter]|out|soft [in|out]]
clear ip bgp external
clear ip bgp external in [prefix-filter]
clear ip bgp external out
clear ip bgp external soft [in|out]
```

| Parameter | Description |
|---|---|
| `external` | Clears all external peers. |
| `ipv4` | Clears all IPv4 address family peers. Configure parameters relating to the BGP exchange of IPv4 prefixes. |
| `in` | Indicates that incoming advertised routes will be cleared. |
| `prefix-filter` | Specifies that a prefix-list will be sent, by the ORF mechanism, to those neighbors with which the ORF capability has been negotiated. The neighbors will be triggered to resend updates, which match the prefix-list filter, to the local router. The local router will then perform a soft reconfiguration. |
| `out` | Indicates that outgoing advertised routes will be cleared. |
| `soft in` | Soft inbound reset causes the neighbors to resend all their updates to the local device, without resetting the connection or clearing the entries in the local device. So, the local device stores new updates, and uses them to systematically replace existing table entries. This process can use a considerable amount of memory. |
| `soft out` | Soft outbound reset causes the device to simply resend all its updates to the specified neighbor(s), without resetting the connection, or clearing table entries. |

**Mode** Privileged Exec

**Examples**

```
awplus# clear ip bgp external out
```

**Command changes** Added to AlliedWare Plus prior to 5.4.6-1

Version 5.4.7-2.1: BGP support added for IEx510, x550 series

Version 5.4.7-2.4: BGP support added for IE300 series

# clear ip bgp peer-group (BGP only)

**Overview** Use this command to reset the BGP connections to all members of a peer group.

**Syntax**

```
clear ip bgp peer-group <peer-name>
clear ip bgp peer-group <peer-name> in [prefix-filter]
clear ip bgp peer-group <peer-name> out
clear ip bgp peer-group <peer-name> soft [in|out]
clear ip bgp peer-group <peer-name> out
clear ip bgp peer-group <peer-name> soft [in|out]
```

| Parameter | Description |
|---|---|
| `peer-group` | Clears all members of a peer group. |
| *<peer-name>* | Specifies the name of the peer group for which all members will be cleared. |
| `ipv4` | Clears all IPv4 address family peers. Configure parameters relating to the BGP exchange of IPv4 prefixes. |
| `in` | Indicates that incoming advertised routes will be cleared. |
| `prefix-filter` | Specifies that a prefix-list will be sent, by the ORF mechanism, to those neighbors with which the ORF capability has been negotiated. The neighbors will be triggered to resend updates, which match the prefix-list filter, to the local router. The local router will then perform a soft reconfiguration. |
| `out` | Indicates that outgoing advertised routes will be cleared. |
| `soft in` | Soft inbound reset causes the neighbors to resend all their updates to the local device, without resetting the connection or clearing the entries in the local device. So, the local device stores new updates, and uses them to systematically replace existing table entries. This process can use a considerable amount of memory. |
| `soft out` | Soft outbound reset causes the device to simply resend all its updates to the specified neighbor(s), without resetting the connection, or clearing table entries. |

**Mode** Privileged Exec

**Examples**

```
awplus# clear ip bgp peer-group Peer1 out
```

**Command changes** Added to AlliedWare Plus prior to 5.4.6-1

Version 5.4.7-2.1: BGP support added for IEx510, x550 series

Version 5.4.7-2.4: BGP support added for IE300 series

# clear ip prefix-list

**Overview** Use this command to reset the hit count to zero in the prefix-list entries.

**Syntax**

```
clear ip prefix-list [<list-name>] [<ip-address>/<mask>]
```

| Parameter | Description |
|---|---|
| *<list-name>* | The name of the prefix-list. |
| *<ip-address>/<mask>* | The IP prefix and length. |

**Mode** Privileged Exec

**Example** To clear a prefix-list named List1:

```
awplus# clear ip prefix-list List1
```

# debug bgp (BGP only)

**Overview** Use this command to turn on one or more BGP debug options.

Use the **no** variant of this command to disable one or more BGP debug options.

**Syntax**

```
debug bgp
[all|dampening|events|filters|fsm|keepalives|nht|nsm|updates
[in|out]]
```

```
no debug all bgp
```

```
no debug bgp
[all|dampening|events|filters|fsm|keepalives|nht|nsm|updates
[in|out]]
```

| Parameter | Description |
|---|---|
| `all` | Turns on all debugging for BGP. |
| `dampening` | Specifies debugging for BGP dampening. |
| `events` | Specifies debugging for BGP events. |
| `filters` | Specifies debugging for BGP filters. |
| `fsm` | Specifies debugging for BGP Finite State Machine (FSM). |
| `keepalives` | Specifies debugging for BGP keepalives. |
| `nht` | Specifies debugging for BGP NHT (Next Hop Tracking) messages. |
| `nsm` | Specifies debugging for NSM messages. |
| `updates` | `[in\|out]`<br>Specifies debugging for BGP updates. |
| `in` | Inbound updates. |
| `out` | Outbound updates. |

**Mode** Privileged Exec and Global Configuration

**Usage** If the command is entered with no parameters, then all debug options are enabled.

**Examples**

```
awplus# debug bgp
awplus# debug bgp events
awplus# debug bgp nht
awplus# debug bgp updates in
```

**Related commands**

show debugging bgp (BGP only)

undebug bgp (BGP only)

**Command changes** Added to AlliedWare Plus prior to 5.4.6-1

Version 5.4.7-2.1: BGP support added for IEx510, x550 series

Version 5.4.7-2.4: BGP support added for IE300 series

# distance (BGP and BGP4+)

**Overview**

This command sets the administrative distance for BGP and BGP4+ routes. The device uses this value to select between two or more routes to the same destination from two different routing protocols. Set the administrative distance for BGP routes in the Router Configuration mode, and for BGP4+ routes in IPv6 Address Family Configuration mode.

The route with the smallest administrative distance value is added to the Forwarding Information Base (FIB). For more information, see the Route Selection Feature Overview and Configuration Guide, which is available from the above link at alliedtelesis.com.

The **no** variant of this command sets the administrative distance for the route to the default for the route type.

**Syntax**

```
distance <1-255> <ip-address/m>
distance bgp <ebgp> <ibgp> <local>
no distance <1-255> <ip-address/m>
no distance bgp <ebgp> <ibgp> <local>
```

| Parameter | Description |
|---|---|
| *<1-255>* | The administrative distance value you are setting for the route. |
| *<ip-address/m>* | The IP source prefix that you are changing the administrative distance for, entered in the form `A.B.C.D/M`. This is an IPv4 address in dotted decimal notation followed by a forward slash, and then the prefix length. |
| *<ebgp>* | Specifies the administrative distance of external BGP (eBGP) routes. These are routes learned from a neighbor out of the AS. Specify the distance as a number between 1 and 255. Default: **20** |
| *<ibgp>* | Specifies the administrative distance of internal BGP (iBGP) routes. These are routes learned from a neighbor within the same AS. Specify the distance as a number between 1 and 255. Default: **200** |
| *<local>* | Specifies the administrative distance of local BGP routes. These are routes redistributed from another protocol within your device. Specify the distance as a number between 1 and 255. Default: **200** |

**Mode [BGP]**

Router Configuration

**Mode [BGP4+]**

IPv6 Address Family Configuration

**Usage notes**

You can use this command to set the administrative distance:

- for each BGP route type by specifying:

```
awplus(config-router)# distance <ebgp> <igbp> <local>
```

- for a specific route by specifying:

```
awplus(config-router)# distance <1-255> <ip-address/m>
[<listname>]
```

If the administrative distance is changed, it could create inconsistency in the routing table and obstruct routing.

**Example [BGP4+]**

For BGP4+ IPv6, to set BGP 100's administrative distances for eBGP routes to 34, iBGP routes to 23, and local BGP routes to 15, use the commands:

```
awplus# configure terminal
awplus(config)# router bgp 100
awplus(config-router)# address-family ipv6
awplus(config-router-af)# distance bgp 34 23 15
```

**Command changes**

Added to AlliedWare Plus prior to 5.4.6-1

Version 5.4.7-2.1: BGP support added for IEx510, x550 series

Version 5.4.7-2.4: BGP support added for IE300 series

# exit-address-family

**Overview** Use this command to exit either the IPv4 or the IPv6 Address Family Configuration mode.

**Syntax**

```
exit-address-family
```

**Mode [BGP]** IPv4 Address Family Configuration

**Mode [BGP4+]** IPv6 Address Family Configuration

**Examples [BGP]** To enter and then exit IPv4 Address Family Configuration mode, use the commands:

```
awplus# configure terminal
awplus(config)# router bgp 100
awplus(config-router)# address-family ipv4
awplus(config-router-af)# exit-address-family
awplus(config-router)#
```

**Example (VRF-lite)** To enter and then exit IPv4 Address Family Configuration mode for VRF instance red, use the commands:

```
awplus# configure terminal
awplus(config)# router bgp 100
awplus(config-router)# address-family ipv4 vrf red
awplus(config-router-af)# exit-address-family
awplus(config-router)#
```

**Example [BGP4+]** To enter and then exit IPv6 Address Family Configuration mode, use the commands:

```
awplus# configure terminal
awplus(config)# router bgp 100
awplus(config-router)# address-family ipv6
awplus(config-router-af)# exit-address-family
awplus(config-router)#
```

**Related commands** address-family

**Command changes** Added to AlliedWare Plus prior to 5.4.6-1

Version 5.4.6-2.1: VRF-lite support added to BGP for AR-series products

Version 5.4.7-2.1: BGP support added for IEx510, x550 series

Version 5.4.7-2.4: BGP support added for IE300 series

# ip community-list

**Overview** Use this command to add an entry to a standard or extended BGP community-list filter.

Use the **no** variant of this command to delete a standard or extended community list entry.

**Syntax**

```
ip community-list <listname> {deny|permit} .<community>
no ip community-list <listname> {deny|permit} .<community>
```

| Parameter | Description |
|---|---|
| `<listname>` | Specifies the community listname. |
| `deny` | Specifies the community to reject. |
| `permit` | Specifies the community to accept. |
| `.<community>` | {<AS:VAL>\|local-AS\|no-advertise\|no-export} |
| `<AS:VAL>` | Specifies the valid value for the community number. This format represents the 32 bit communities value, where AS is the high order 16 bits and VAL is the low order 16 bits in digit format. |
| `local-AS` | Specifies routes not to be advertised to external BGP peers. |
| `no-advertise` | Specifies routes not to be advertised to other BGP peers. |
| `no-export` | Specifies routes not to be advertised outside of Autonomous System boundary. |

**Mode** Global Configuration

**Usage notes** A community-list can be used as a filter to BGP updates. Use this command to define the community access list globally, then use neighbor configuration commands to apply the list to a particular neighbor.

There are two kinds of community-lists: expanded and standard. A standard community- list defines the community attributes explicitly and not via a regular expression. An expanded community-list defines the communities attributes with regular expressions.

The standard community-list is compiled into binary format and is directly compared with the BGP communities attribute in the BGP updates. The comparison is faster than the expanded community-list. Any community value that does not match the standard community value is automatically treated as expanded.

**Example**

```
awplus# configure terminal
awplus(config)# ip community-list mylist permit 7675:80 7675:90
```

**Related commands**

ip community-list standard

ip community-list expanded

show ip community-list

**Command changes**

Added to AlliedWare Plus prior to 5.4.6-1

Version 5.4.7-2.1: BGP support added for IEx510, x550 series

Version 5.4.7-2.4: BGP support added for IE300 series

# ip community-list expanded

**Overview** Use this command to add an entry to an expanded BGP community-list filter.

Use the **no** variant of this command to delete the community list entry.

**Syntax**

```
ip community-list <100-199> {deny|permit} .<line>
no ip community-list <100-199> {deny|permit} .<line>
ip community-list expanded <expanded-listname> {deny|permit}
.<line>
no ip community-list expanded <expanded-listname> {deny|permit}
.<line>
```

| Parameter | Description |
|---|---|
| *<100-199>* | Expanded community list number. |
| expanded | Specifies an expanded community list. |
| *<expanded-listname>* | Expanded community list entry. |
| deny | Specifies community to reject. |
| permit | Specifies community to accept. |
| *.<line>* | Specifies community attributes with regular expressions. |

Regular expressions listed below can be used with the **ip community-list expanded** command:

| Symbol | Character | Meaning |
|---|---|---|
| ^ | Caret | Used to match the beginning of the input string. When used at the beginning of a string of characters, it negates a pattern match. |
| $ | Dollar sign | Used to match the end of the input string. |
| . | Period | Used to match a single character (white spaces included). |
| * | Asterisk | Used to match none or more sequences of a pattern. |
| + | Plus sign | Used to match one or more sequences of a pattern. |
| ? | Question mark | Used to match none or one occurrence of a pattern. |
| _ | Underscore | Used to match spaces, commas, braces, parenthesis, or the beginning and end of an input string. |
| [ ] | Brackets | Specifies a range of single-characters. |
| - | Hyphen | Separates the end points of a range. |

**Mode** Global Configuration

**Usage notes** A `community-list` can be used as a filter to BGP updates. Use this command to define the community access list globally, then use **neighbor** configuration commands to apply the list to a particular neighbor.

There are two kinds of community-lists: expanded and standard. A standard community- list defines the community attributes explicitly and not via a regular expression. An expanded community-list defines the communities attributes with regular expressions.

The standard community-list is compiled into binary format and is directly compared with the BGP communities attribute in the BGP updates. The comparison is faster than the expanded community-list. Any community value that does not match the standard community value is automatically treated as expanded.

**Examples**

```
awplus# configure terminal
awplus(config)# ip community-list 125 permit 6789906
awplus(config)# ip community-list expanded CLIST permit .*
```

**Related commands**

ip community-list

ip community-list standard

show ip community-list

**Command changes**

Added to AlliedWare Plus prior to 5.4.6-1

Version 5.4.7-2.1: BGP support added for IEx510, x550 series

Version 5.4.7-2.4: BGP support added for IE300 series

# ip community-list standard

**Overview** Use this command to add an entry to a standard BGP community-list filter.

Use the **no** variant of this command to delete the standard community-list entry.

**Syntax**

```
ip community-list <1-99> {deny|permit} [.<community>]
no ip community-list <1-99> {deny|permit} [.<community>]
ip community-list standard <standard-listname> {deny|permit}
[.<community>]
no ip community-list standard <standard-listname> {deny|permit}
[.<community>]
```

| Parameter | Description |
|---|---|
| *<1-99>* | Standard community list number. |
| `standard` | Specifies a standard community list. |
| *<standard-listname>* | Standard community list entry. |
| `deny` | Specifies community to reject. |
| `permit` | Specifies community to accept. |
| *<community>* | {*<AS:VAL>*\| local-AS\| no-advertise\| no-export} |
| *<AS:VAL>* | Specifies the valid value for the community number. This format represents the 32 bit communities value, where AS is the high order 16 bits and VAL is the low order 16 bits in digit format. |
| `local-AS` | Specifies routes not to be advertised to external BGP peers. |
| `no-advertise` | Specifies routes not to be advertised to other BGP peers. |
| `no-export` | Specifies routes not to be advertised outside of the Autonomous System boundary. |

**Mode** Global Configuration

**Usage notes** A community-list can be used as a filter to BGP updates. Use this command to define the community access list globally, then use neighbor configuration commands to apply the list to a particular neighbor.

There are two kinds of community-lists: expanded and standard. The standard community-list defines the community attributes as explicit values, without regular expressions. The expanded community-list defines the communities attributes with regular expressions.

The standard community-list is compiled into binary format and is directly compared with the BGP communities attribute in the BGP updates. The comparison is faster than the expanded community-list. Any community value

that does not match the standard community value is automatically treated as expanded.

**Examples**

```
awplus# configure terminal
awplus(config)# ip community-list standard CLIST permit 7675:80
7675:90 no-export
awplus(config)# ip community-list 34 permit 5675:50
no-advertise
```

**Related commands**

ip community-list

ip community-list expanded

show ip community-list

**Command changes**

Added to AlliedWare Plus prior to 5.4.6-1

Version 5.4.7-2.1: BGP support added for IEx510, x550 series

Version 5.4.7-2.4: BGP support added for IE300 series

# ip extcommunity-list expanded

**Overview** Use this command to create or delete an expanded extended community list.

Use the **no** variant of this command to delete the expanded extended community-list entry.

**Syntax**

```
ip extcommunity-list <100-199> {deny|permit}
{.<line>|.<AS:NN>|.<ip-address>}
```

```
no ip extcommunity-list <100-199> {deny|permit}
{.<line>|.<AS:NN>|.<ip-address>}
```

```
ip extcommunity-list expanded <expanded-listname> {deny|permit}
{.<line>|.<AS:NN>|.<ip-address>}
```

```
no ip extcommunity-list expanded <expanded-listname>
{deny|permit} {.<line>|.<AS:NN>|.<ip-address>}
```

```
no ip extcommunity-list <100-199>
```

```
no ip extcommunity-list expanded <expanded-listname>
```

| Parameter | Description |
|---|---|
| *<100-199>* | Expanded extcommunity list number. |
| expanded | Specifies an expanded extcommunity list. |
| *<expanded-listname>* | Expanded extcommunity list entry. |
| deny | Specifies the extcommunity to reject. |
| permit | Specifies the extcommunity to accept. |
| *.<line>* | Specifies extcommunity attributes with regular expression. |
| *<AS:NN>* | Specifies the valid value for an extcommunity number. This format represents the 32 bit extcommunities value, where AA is the high order 16 bits and NN is the low order 16 bits in digit format. |
| *<ip-address>* | Specifies the IP address to deny or permit. |

Regular expressions listed below are used with the **ip extcommunity-list expanded** command:

| Symbol | Character | Meaning |
|---|---|---|
| ^ | Caret | Used to match the beginning of the input string. When used at the beginning of a string of characters, it negates a pattern match. |
| $ | Dollar sign | Used to match the end of the input string. |

| Symbol | Character | Meaning |
|---|---|---|
| . | Period | Used to match a single character (white spaces included). |
| * | Asterisk | Used to match none or more sequences of a pattern. |
| + | Plus sign | Used to match one or more sequences of a pattern. |
| ? | Question mark | Used to match none or one occurrence of a pattern. |
| _ | Underscore | Used to match spaces, commas, braces, parenthesis, or the beginning and end of an input string. |
| [ ] | Brackets | Specifies a range of single-characters. |
| - | Hyphen | Separates the end points of a range. |

**Mode** Global Configuration

**Examples**

```
awplus# configure terminal
awplus(config)# ip extcommunity-list 125 permit 4567335
awplus(config)# ip extcommunity-list expanded CLIST permit .*
```

**Related commands** ip extcommunity-list standard

show ip extcommunity-list

**Command changes** Added to AlliedWare Plus prior to 5.4.6-1

Version 5.4.7-2.1: BGP support added for IEx510, x550 series

Version 5.4.7-2.4: BGP support added for IE300 series

# ip extcommunity-list standard

**Overview** Use this command to create and delete a standard extended community list.

Use the **no** variant of this command to delete a standard extended community-list entry.

**Syntax**

```
ip extcommunity-list <1-99> {deny|permit} {rt|soo}
<community-number>
```

```
ip extcommunity-list standard <standard-listname> {deny|permit}
{rt|soo} <community-number>
```

```
no ip extcommunity-list <1-99> [{deny|permit} {rt|soo}
<community-number>]
```

```
no ip extcommunity-list standard <standard-listname>
[{deny|permit} {rt|soo} <community-number>]
```

| Parameter | Description |
|---|---|
| *<1-99>* | Standard extcommunity list number. |
| `standard` | Specifies a standard extended community list. |
| *<standard-listname>* | Standard extended community list entry. |
| `deny` | Specifies the extended community to reject. |
| `permit` | Specifies the extended community to accept. |
| `rt` | Specifies the route target of the extended community. |
| `soo` | Specifies the site of origin of the extended community. |
| *<community-number>* | Specifies the valid value for an extended community number.<br>This can be one of two formats:<br>• <ASN:NN> where *ASN* is an AS (Autonomous System) number and *NN* is a value chosen by the ASN administrator<br>• <A.B.C.D:NN> where *A.B.C.D* is an IPv4 address, and *NN* is a value chosen by the ASN administrator.<br>Note that *ASN* and *NN* are both integers from 1 to 4294967295.<br>AS numbers are assigned to the regional registries by IANA (www.iana.org) and must be obtained in your region. |

**Mode** Global Configuration

**Examples**

```
awplus# configure terminal
awplus(config)# ip extcommunity-list 36 permit rt 5675:50
awplus(config)# ip extcommunity-list standard CLIST permit soo
7645:70
```

```
awplus# configure terminal
awplus(config)# ip extcommunity-list 36 deny rt 192.168.1.1:70
awplus(config)# ip extcommunity-list standard CLIST deny soo
10.10.1.1:50
```

**Related commands**

ip extcommunity-list expanded

show ip extcommunity-list

**Command changes**

Added to AlliedWare Plus prior to 5.4.6-1

Version 5.4.7-2.1: BGP support added for IEx510, x550 series

Version 5.4.7-2.4: BGP support added for IE300 series

# ip prefix-list

**Overview** Use this command to create an entry for an IPv4 prefix list.

Use the **no** variant of this command to delete the IPv4 prefix-list entry.

**Syntax**

```
ip prefix-list <list-name> [seq <1-429496725>] {deny|permit}
{any|<ip-prefix>} [ge <0-32>] [le <0-32>]
ip prefix-list <list-name> description <text>
ip prefix-list sequence-number
no ip prefix-list <list-name> [seq <1-429496725>]
no ip prefix-list <list-name> [description <text>]
no ip prefix-list sequence-number
```

| Parameter | Description |
|---|---|
| *<list-name>* | Specifies the name of a prefix list. |
| seq *<1-429496725>* | Sequence number of the prefix list entry. |
| deny | Specifies that the prefixes are excluded from the list. |
| permit | Specifies that the prefixes are included in the list. |
| *<ip-prefix>* | Specifies the IPv4 address and length of the network mask in dotted decimal in the format A.B.C.D/M. |
| any | Any prefix match. Same as **0.0.0.0/0 le 32**. |
| ge*<0-32>* | Specifies the minimum prefix length to be matched. |
| le*<0-32>* | Specifies the maximum prefix length to be matched. |
| *<text>* | Text description of the prefix list. |
| sequence-number | Specify sequence numbers included or excluded in prefix list. |

**Mode** Global Configuration

**Usage notes** When the device processes a prefix list, it starts to match prefixes from the top of the prefix list, and stops whenever a permit or deny occurs. To promote efficiency, use the **seq** parameter and place common permits or denials towards the top of the list. If you do not use the **seq** parameter, the sequence values are generated in a sequence of 5.

The parameters **ge** and **le** specify the range of the prefix lengths to be matched. When setting these parameters, set the **le** value to be less than 32, and the **ge** value to be less than or equal to the **le** value and greater than the ip-prefix mask length.

Prefix lists implicitly exclude prefixes that are not explicitly permitted in the prefix list. This means if a prefix that is being checked against the prefix list reaches the end of the prefix list without matching a permit or deny, this prefix will be denied.

**Example**

In the following sample configuration, the last **ip prefix-list** command in the below list matches all, and the first **ip prefix-list** command denies the IP network 76.2.2.0:

```
awplus(config)# router bgp 100
awplus(config-router)# network 172.1.1.0
awplus(config-router)# network 172.1.2.0
awplus(config-router)# neighbor 10.6.5.3 remote-as 300
awplus(config-router)# neighbor 10.6.5.3 prefix-list mylist out
awplus(config-router)# exit
awplus(config)# ip prefix-list mylist seq 5 deny 76.2.2.0/24
awplus(config)# ip prefix-list mylist seq 100 permit any
```

To deny the IP addresses between 10.0.0.0/14 (10.0.0.0 255.252.0.0) and 10.0.0.0/22 (10.0.0.0 255.255.252.0) within the 10.0.0.0/8 (10.0.0.0 255.0.0.0) addressing range, enter the following commands:

```
awplus# configure terminal
awplus(config)# ip prefix-list mylist seq 12345 deny 10.0.0.0/8
ge 14 le 22
```

**Related commands**

neighbor prefix-list

clear ip prefix-list

show ip prefix-list

# ipv6 prefix-list

**Overview** Use this command to create an IPv6 prefix list or an entry in an existing prefix list.

Use the **no** variant of this command to delete a whole prefix list, a prefix list entry, or a description.

**Syntax**

```
ipv6 prefix-list <list-name> [seq <1-429496725>] {deny|permit}
{any|<ipv6-prefix>} [ge <0-128>] [le <0-128>]
ipv6 prefix-list <list-name> description <text>
no ipv6 prefix-list <list-name> [seq <1-429496725>]
no ipv6 prefix-list <list-name> [description <text>]
```

| Parameter | Description |
|---|---|
| `<list-name>` | Specifies the name of a prefix list. |
| `seq <1-429496725>` | Sequence number of the prefix list entry. |
| `deny` | Specifies that the prefixes are excluded from the list. |
| `permit` | Specifies that the prefixes are included in the list. |
| `<ipv6-prefix>` | Specifies the IPv6 prefix and prefix length in hexadecimal in the format X:X::X:X/M. |
| `any` | Any prefix match. Same as ::0/0 le 128. |
| `ge <0-128>` | Specifies the minimum prefix length to be matched. |
| `le <0-128>` | Specifies the maximum prefix length to be matched. |
| `description` | Prefix list specific description. |
| `<text>` | Up to 80 characters of text description of the prefix list. |

**Mode** Global Configuration

**Usage notes** When the device processes a prefix list, it starts to match prefixes from the top of the prefix list, and stops whenever a permit or deny occurs. To promote efficiency, use the **seq** parameter and place common permits or denials towards the top of the list. If you do not use the **seq** parameter, the sequence values are generated in a sequence of 5.

The parameters **ge** and **le** specify the range of the prefix lengths to be matched. The parameters **ge** and **le** are only used if an ip-prefix is stated. When setting these parameters, set the **le** value to be less than 128, and the **ge** value to be less than or equal to the **le** value and greater than the ip-prefix mask length.

Prefix lists implicitly exclude prefixes that are not explicitly permitted in the prefix list. This means if a prefix that is being checked against the prefix list reaches the end of the prefix list without matching a permit or deny, this prefix will be denied.

**Example**

To check the first 32 bits of the prefix 2001:db8:: and that the subnet mask must be greater than or equal to 34 and less than or equal to 40, enter the following commands:

```
awplus# configure terminal
awplus(config)# ipv6 prefix-list mylist seq 12345 permit
2001:db8::/32 ge 34 le 40
```

**Related commands**

match ipv6 address

show ipv6 prefix-list

show running-config ipv6 prefix-list

# match as-path

**Overview**

Use this command to add an autonomous system (AS) path match clause to a route map entry. Specify the AS path attribute value or values to match by specifying the name of an AS path access list.

A BGP update message matches the route map if its attributes include AS path values that match the AS path access list.

Each entry of a route map can only match against one AS path access list in one AS path match clause. If the route map entry already has an AS path match clause, entering this command replaces that match clause with the new clause.

Note that AS path access lists and route map entries both specify an action of deny or permit. The action in the AS path access list determines whether the route map checks update messages for a given AS path value. The route map action and its **set** clauses determine what the route map does with update messages that contain that AS path value.

Use the **no** variant of this command to remove the AS path match clause from a route map entry.

**Syntax**

```
match as-path <as-path-listname>
no match as-path [<as-path-listname>]
```

| Parameter | Description |
|---|---|
| *<as-path-listname>* | Specifies an AS path access list name. |

**Mode**

Route-map Configuration

**Usage notes**

This command is valid for BGP update messages only.

**Example**

To add entry 34 to the route map called `myroute`, which will discard update messages if they contain the AS path values that are included in `myaccesslist`, use the commands:

```
awplus# configure terminal
awplus(config)# route-map myroute deny 34
awplus(config-route-map)# match as-path myaccesslist
```

**Related commands**

route-map

set as-path

show route-map

**Command changes**

Added to AlliedWare Plus prior to 5.4.6-1

Version 5.4.7-2.1: BGP support added for IEx510, x550 series

Version 5.4.7-2.4: BGP support added for IE300 series

# match community

**Overview**

Use this command to add a community match clause to a route map entry. Specify the community value or values to match by specifying a community list. To create the community list, enter Global Configuration mode and use the ip community-list command.

A BGP update message matches the route map if its attributes include community values that match the community list.

Each entry of a route map can only match against one community list in one community match clause. If the route map entry already has a community match clause, entering this command replaces that match clause with the new clause.

Note that community lists and route map entries both specify an action of deny or permit. The action in the community list determines whether the route map checks update messages for a given community value. The route map action and its **set** clauses determine what the route map does with update messages that contain that community value.

Use the **no** variant of this command to remove the community match clause from a route map.

**Syntax**

```
match community
{<community-listname>|<1-99>|<100-199>}[exact-match]
```

```
no match community
[<community-listname>|<1-99>|<100-199>|exact-match]
```

| Parameter | Description |
|---|---|
| *<community-listname>* | The community list name or number. |
| *<1-99>* | Community list number (standard range). |
| *<100-199>* | Community list number (expanded range). |
| exact-match | Exact matching of communities. |

**Mode**

Route-map Configuration

**Usage notes**

This command is valid for BGP update messages only.

Communities are used to group and filter routes. They are designed to provide the ability to apply policies to large numbers of routes by using match and set commands. Community lists are used to identify and filter routes by their common attributes.

**Example**

To add entry 3 to the route map called `myroute`, which will process update messages if they contain the community values that are included in `mylist`, use the commands:

```
awplus# configure terminal
awplus(config)# route-map myroute permit 3
awplus(config-route-map)# match community mylist
```

**Related commands**

ip community-list

route-map

set comm-list delete

set community

show route-map

**Command changes**

Added to AlliedWare Plus prior to 5.4.6-1

Version 5.4.7-2.1: BGP support added for IEx510, x550 series

Version 5.4.7-2.4: BGP support added for IE300 series

# max-paths

**Overview**

Use this command to set the number of equal-cost multi-path (ECMP) routes for eBGP or iBGP. You can install multiple BGP paths to the same destination to balance the load on the forwarding path.

Use the **no** variant of this command to disable this feature.

**Syntax**

```
max-paths {ebgp|ibgp} <2-64>
no max-paths ebgp [<2-64>]
no max-paths ibgp [<2-64>]
```

| Parameter | Description |
|---|---|
| ebgp | eBGP ECMP session. |
| ibgp | iBGP ECMP session. |
| *<2-64>* | Specifies the number of routes. |

**Mode**

Global Configuration

**Usage notes**

This command is available for the default BGP instance and for IPV4 and IPv6 unicast addresses.

**Example**

```
awplus# configure terminal
awplus(config)# router bgp 64501
awplus(config-router)# max-paths ebgp 2
```

**Related commands**

show ip route summary

**Command changes**

Added to AlliedWare Plus prior to 5.4.6-1

Version 5.4.7-2.1: BGP support added for IEx510, x550 series

Version 5.4.7-2.4: BGP support added for IE300 series

# neighbor activate

**Overview** Use this command to enable the exchange of BGP IPv4 and BGP4+ IPv6 routes with a neighboring router, and also within either an IPv4 or an IPv6 specific address-family.

Use the **no** variant of this command to disable the exchange of information with a BGP or BGP4+ neighbor, in the Router Configuration or the Address Family Configuration mode.

**Syntax**

```
neighbor <neighborid> activate
no neighbor <neighborid> activate
```

| Parameter | Description | |
|---|---|---|
| *<neighborid>* | {*<ip-address>* \| *<ipv6-addr>* \| *<peer-group>*} | |
| | *<ip-address>* | Specify the address of an IPv4 BGP neighbor, in dotted decimal notation A.B.C.D. |
| | *<ipv6-addr>* | Specify the address of an IPv6 BGP4+ neighbor, entered in hexadecimal in the format X:X::X:X. |
| | *<peer-group>* | Enter the name of an existing peer-group. For information on how to create peer groups, refer to the neighbor peer-group (add a neighbor) command, and neighbor route-map command. When this parameter is used with this command, the command applies on all peers in the specified group. |

**Mode [BGP]** Router Configuration or IPv4 Address Family Configuration

**Mode [BGP4+]** IPv6 Address Family Configuration

**Usage [BGP]** Use this command to enable the exchange of information to a neighbor. To exchange IPv4 or IPv6 prefixes with a BGP or a BGP4+ peer, you must configure this command for the peer or the peer group. This command only enables the exchange of information. You can establish peering without this command, but no prefixes and other information is sent until you apply this command to the neighbor.

This command triggers the device to start a BGP or BGP4+ peering relationship with the specified BGP or BGP4+ neighbor and start exchanging routes with that neighbor.

The command is required for neighbors configured in Address-Family Configuration mode, but it is not required in Router Configuration mode (that is, it does not affect the device's behavior).

**Examples [BGP]**

To enable an exchange of routes with a neighboring router with the IPv4 address 10.10.10.1, enter the commands as shown below:

```
awplus# configure terminal
awplus(config)# router bgp 10
awplus(config-router)# neighbor 10.10.10.1 activate
```

To disable an exchange of routes with a neighboring router with the IPv4 address 10.10.10.1, enter the commands as shown below:

```
awplus# configure terminal
awplus(config)# router bgp 10
awplus(config-router)# no neighbor 10.10.10.1 activate
```

To enable an exchange of routes in Address Family Configuration mode with a neighboring router with the IPv4 address 10.10.10.1, enter the commands as shown below:

```
awplus# configure terminal
awplus(config)# router bgp 10
awplus(config-router)# address-family ipv4
awplus(config-router-af)# neighbor 10.10.10.1 activate
```

To disable an exchange of routes in Address Family Configuration mode with a neighboring router with the IPv4 address 10.10.10.1, enter the commands as shown below:

```
awplus# configure terminal
awplus(config)# router bgp 10
awplus(config-router)# address-family ipv4
awplus(config-router-af)# no neighbor 10.10.10.1 activate
```

To enable an exchange of routes with a neighboring router with the peer-group named group1, enter the commands as shown below:

```
awplus# configure terminal
awplus(config)# router bgp 10
awplus(config-router)# neighbor group1 peer-group
awplus(config-router)# neighbor 10.10.0.63 remote-as 10
awplus(config-router)# neighbor 10.10.0.63 peer-group group1
awplus(config-router)# neighbor group1 activate
```

To disable an exchange of routes with a neighboring router with the peer-group named group1, enter the commands as shown below:

```
awplus# configure terminal
awplus(config)# router bgp 10
awplus(config-router)# no neighbor group1 activate
```

**Examples [BGP4+]**

To enable an exchange of routes in IPv6 Address Family Configuration mode with a neighboring router with the IPv6 address 2001:0db8:010d::1, enter the commands as shown below:

```
awplus# configure terminal
awplus(config)# router bgp 10
awplus(config-router)# address-family ipv6
awplus(config-router-af)# neighbor 2001:0db8:010d::1 activate
```

To disable an exchange of routes in IPv6 Address Family Configuration mode with a neighboring router with the IPv6 address 2001:0db8:010d::1, enter the commands as shown below:

```
awplus# configure terminal
awplus(config)# router bgp 10
awplus(config-router)# address-family ipv6
awplus(config-router-af)# no neighbor 2001:0db8:010d::1
activate
```

To enable an exchange of routes with a neighboring router with the peer-group named group1, enter the commands as shown below:

```
awplus# configure terminal
awplus(config)# router bgp 10
awplus(config-router)# neighbor group1 peer-group
awplus(config-router)# neighbor 2001:0db8:010d::1 remote-as 10
awplus(config-router)# address-family ipv6
awplus(config-router-af)# neighbor 2001:0db8:010d::1
peer-group group1
awplus(config-router-af)# neighbor group1 activate
```

To disable an exchange of routes with a neighboring router with the peer-group named group1, enter the commands as shown below:

```
awplus# configure terminal
awplus(config)# router bgp 10
awplus(config-router)# address-family ipv6
awplus(config-router-af)# no neighbor group1 activate
```

**Related commands**

neighbor peer-group (add a neighbor)

neighbor route-map

**Command changes**

Added to AlliedWare Plus prior to 5.4.6-1

Version 5.4.6-2.1: VRF-lite support added to BGP for AR-series products

Version 5.4.7-2.1: BGP support added for IEx510, x550 series

Version 5.4.7-2.4: BGP support added for IE300 series

# neighbor advertisement-interval

**Overview** Use this command to set the minimum interval between sending iBGP or eBGP routing updates for a given route. This command reduces the flapping of individual routes.

Use the **no** variant of this command to set the interval time to the default values (30 seconds for eBGP peers and 5 seconds for iBGP peers) for a given route.

**Syntax**

```
neighbor <neighborid> advertisement-interval <time>
no neighbor <neighborid> advertisement-interval [<time>]
```

| Parameter | Description | |
|---|---|---|
| *<neighborid>* | {*<ip-address>* \| *<ipv6-addr>* \| *<peer-group>*} | |
| | *<ip-address>* | Specify the address of an IPv4 BGP neighbor, in dotted decimal notation A.B.C.D. |
| | *<ipv6-addr>* | Specify the address of an IPv6 BGP4+ neighbor, entered in hexadecimal in the format X:X::X:X. |
| | *<peer-group>* | Enter the name of an existing peer-group. For information on how to create peer groups, refer to the neighbor peer-group (add a neighbor) command, and neighbor route-map command. When this parameter is used with this command, the command applies on all peers in the specified group. Note that if you apply an advertisement-interval value to a peer group it will apply to all members in the peer group. |
| *<time>* | *<0-600>* | Advertisement -interval value in seconds. |

**Default** The default interval between sending routing updates for a given route to eBGP peers is 30 seconds, and the default interval for a given route to iBGP peers is 5 seconds.

**Mode** Router Configuration

**Usage notes** Use this command to set the minimum interval between sending iBGP or eBGP routing updates for a given route. To reduce the flapping of routes to the internet, set a minimum advertisement interval, so iBGP or eBGP routing updates are sent per interval seconds.

BGP dampening can also be used to control the effects of flapping routes. See the bgp dampening command in this chapter, and the Routing_Protocol Guide for more information.

The advertisement-interval time value is the minimum time between the advertisement of Update messages sent from a BGP speaker to report changes to

eBGP or iBGP peers. This is the minimum time between two Update messages sent to iBGP or eBGP peers.

See the neighbor as-origination-interval command to set the interval time between messages to iBGP peers, which have prefixes within the local AS. Use this command instead of the neighbor as-origination-interval command for eBGP peers with prefixes not in the same AS and updates not in a local AS.

**Examples [BGP]**

```
awplus# configure terminal
awplus(config)# router bgp 10
awplus(config-router)# neighbor 10.10.0.3
advertisement-interval 45
awplus# configure terminal
awplus(config)# router bgp 10
awplus(config-router)# no neighbor 10.10.0.3
advertisement-interval
awplus# configure terminal
awplus(config)# router bgp 10
awplus(config-router)# neighbor group1 peer-group
awplus(config-router)# neighbor 10.10.0.3 remote-as 10
awplus(config-router)# neighbor 10.10.0.3 peer-group group1
awplus(config-router)# neighbor group1 advertisement-interval
45
awplus# configure terminal
awplus(config)# router bgp 10
awplus(config-router)# no neighbor group1
advertisement-interval
```

**Examples [BGP4+]**

```
awplus# configure terminal
awplus(config)# router bgp 10
awplus(config-router)# neighbor 2001:0db8:010d::1
advertisement-interval 45
awplus# configure terminal
awplus(config)# router bgp 10
awplus(config-router)# no neighbor 2001:0db8:010d::1
advertisement-interval
awplus# configure terminal
awplus(config)# router bgp 10
awplus(config-router)# neighbor group1 peer-group
awplus(config-router)# neighbor 2001:0db8:010d::1 remote-as 10
awplus(config-router)# address-family ipv6
awplus(config-router-af)# neighbor 2001:0db8:010d::1
peer-group group1
awplus(config-router-af)# neighbor group1
advertisement-interval 45
awplus# configure terminal
awplus(config)# router bgp 10
awplus(config-router)# address-family ipv6
awplus(config-router-af)# no neighbor group1
advertisement-interval
```

**Related commands**

neighbor as-origination-interval

neighbor peer-group (add a neighbor)

neighbor route-map

show bgp ipv6 neighbors (BGP4+ only)

show ip bgp neighbors (BGP only)

**Command changes**

Added to AlliedWare Plus prior to 5.4.6-1

Version 5.4.7-2.1: BGP support added for IEx510, x550 series

Version 5.4.7-2.4: BGP support added for IE300 series

# neighbor allowas-in

**Overview** Use this command to accept an AS_PATH with the specified Autonomous System (AS) number from inbound updates for both BGP and BGP4+ routes.

This command allows BGP and BGP4+ to accept prefixes with the same ASN in the AS_PATH attribute. This command allows BGP and BGP4+ to accept up to 10 instances, configured by the *<occurrences>* placeholder, of its own AN in the AS_PATH for a prefix.

Use the **no** variant of this command to revert to default functionality (disabled by default).

**Syntax**

```
neighbor <neighborid> allowas-in <occurrences>
no neighbor <neighborid> allowas-in
```

| Parameter | Description | |
|---|---|---|
| *<neighborid>* | {*<ip-address>* \| *<ipv6-addr>* \| *<peer-group>*} | |
| | *<ip-address>* | Specify the address of an IPv4 BGP neighbor, in dotted decimal notation A.B.C.D. |
| | *<ipv6-addr>* | Specify the address of an IPv6 BGP4+ neighbor, entered in hexadecimal in the format X:X::X:X. |
| | *<peer-group>* | Enter the name of an existing peer-group. For information on how to create peer groups, refer to the neighbor peer-group (add a neighbor) command, and neighbor route-map command. When this parameter is used with this command, the command applies on all peers in the specified group. |
| *<occurrences>* | *<1-10>* Specifies the number of occurrences of the AS number. | |

**Default** Disabled

**Mode [BGP]** Router Configuration or IPv4 Address Family Configuration

**Mode [BGP4+]** IPv6 Address Family Configuration

**Usage** Use this command to configure PE (Provider Edge) routers to allow re-advertisement of all prefixes containing duplicate Autonomous System Numbers (ASNs). In a hub and spoke configuration, a PE router re-advertises all prefixes containing duplicate ASNs. Specify the remote-as or peer-group first using the related commands. The command allows a receiving peer to accept prefixes with its own AN in the AS_PATH, up the maximum number of instances, as configured by the *<occurrences>* placeholder.

**Examples [BGP]**

```
awplus# configure terminal
awplus(config)# router bgp 10
awplus(config-router)# neighbor 10.10.0.1 allowas-in 3
awplus# configure terminal
awplus(config)# router bgp 10
awplus(config-router)# address-family ipv4
awplus(config-router-af)# neighbor 10.10.0.1 allowas-in 3
awplus# configure terminal
awplus(config)# router bgp 10
awplus(config-router)# no neighbor 10.10.0.1 allowas-in
awplus# configure terminal
awplus(config)# router bgp 10
awplus(config-router)# address-family ipv4
awplus(config-router-af)# no neighbor 10.10.0.1 allowas-in
awplus# configure terminal
awplus(config)# router bgp 10
awplus(config-router)# neighbor group1 peer-group
awplus(config-router)# neighbor 10.10.0.1 remote-as 10
awplus(config-router)# neighbor 10.10.0.1 peer-group group1
awplus(config-router)# neighbor group1 allowas-in 3
awplus# configure terminal
awplus(config)# router bgp 10
awplus(config-router)# address-family ipv4
awplus(config-router-af)# neighbor group1 allowas-in 3
```

**Examples [BGP4+]**

```
awplus# configure terminal
awplus(config)# router bgp 10
awplus(config-router)# address-family ipv6
awplus(config-router-af)# neighbor 2001:0db8:010d::1
allowas-in 3
awplus# configure terminal
awplus(config)# router bgp 10
awplus(config-router)# address-family ipv6
awplus(config-router-af)# no neighbor 2001:0db8:010d::1
allowas-in
awplus# configure terminal
awplus(config)# router bgp 10
awplus(config-router)# neighbor group1 peer-group
awplus(config-router)# neighbor 2001:0db8:010d::1 remote-as 10
awplus(config-router)# address-family ipv6
awplus(config-router-af)# neighbor 2001:0db8:010d::1
peer-group group1
awplus(config-router-af)# neighbor group1 allowas-in 3
awplus# configure terminal
awplus(config)# router bgp 10
awplus(config-router)# address-family ipv6
awplus(config-router-af)# neighbor group1 allowas-in 3
```

**Related commands**

neighbor peer-group (add a neighbor)

neighbor route-map

**Command changes**

Added to AlliedWare Plus prior to 5.4.6-1

Version 5.4.7-2.1: BGP support added for IEx510, x550 series

Version 5.4.7-2.4: BGP support added for IE300 series

# neighbor as-origination-interval

**Overview** Use this command to adjust the sending of AS (Autonomous System) origination routing updates to a specified iBGP peer. This command adjusts the rate at which updates are sent to a specified iBGP peer (15 seconds by default). You must set a rate when you enable it.

The as-origination-interval is the minimum time set between the advertisement of Update messages sent from a BGP speaker to an iBGP peer to report changes within the local AS.

Use the **no** variant of this command to reset the timer to the default value of 15 seconds.

**Syntax [BGP]**

```
neighbor <neighbor_address> as-origination-interval <time>
no neighbor <neighbor_address> as-origination-interval [<time>]
```

**Syntax [BGP4+]**

```
neighbor <ipv6-addr> as-origination-interval <time>
no neighbor <ipv6-addr> as-origination-interval [<time>]
```

| Parameter | Description |
|---|---|
| *<neighbor_address>* | Specify a neighbor IPv4 address, in dotted decimal in the format A.B.C.D. |
| *<ipv6-addr>* | Specify an address of an IPv6 BGP4+ neighbor, entered in hexadecimal in the format X:X::X:X. |
| *<time>* | <1-600> Time in seconds. |

**Default** The default interval between sending routing updates to iBGP peers, which include a prefix that originates from the local AS, is 15 seconds by default.

**Mode** Router Configuration

**Usage** This command is used to change the minimum interval between sending AS-origination routing updates. The update interval for iBGP peers can be set from 1 to 600 seconds.

For interoperability with other vendors' devices, we recommend using the default value. The AS origination interval timer may not be available to adjust on other vendors' devices. Applying the default of 15 seconds across the AS maintains a common timer policy.

AlliedWare Plus devices use the default 15 second AS Origination Interval timer as per RFC 4271, a 30 second keepalive timer, a 90 second hold timer, a 120 second connect timer, a 5 second iBGP peer route advertisement interval, and a 30 second eBGP peer route advertisement interval.

Cisco devices use a 60 second keepalive timer, a 180 second hold timer, and no iBGP peer route interval timer (0). Juniper devices use a 10 second AS Origination Interval timer.

The as-origination-interval time value is the minimum amount of time between the advertisement of Update messages sent from a BGP speaker to report changes within the local AS. This is the minimum time between two Update messages to iBGP peers, which contain a prefix that originates from the same AS. See the neighbor advertisement-interval command to set time between messages to eBGP peers.

Use this command instead of the neighbor advertisement-interval command for iBGP peers with prefixes in the same AS for updates only within a local AS.

**Examples [BGP]**

```
awplus# configure terminal
awplus(config)# router bgp 100
awplus(config-router)# neighbor 10.10.0.1
as-origination-interval 10
awplus# configure terminal
awplus(config)# router bgp 100
awplus(config-router)# no neighbor 10.10.0.1
as-origination-interval
```

**Examples [BGP4+]**

```
awplus# configure terminal
awplus(config)# router bgp 100
awplus(config-router)# neighbor 2001:0db8:010d::1
as-origination-interval 10
awplus# configure terminal
awplus(config)# router bgp 100
awplus(config-router)# no neighbor 2001:0db8:010d::1
as-origination-interval
```

**Validation Commands**

show bgp ipv6 neighbors (BGP4+ only)

show ip bgp neighbors (BGP only)

**Related commands**

neighbor advertisement-interval

address-family

**Command changes**

Added to AlliedWare Plus prior to 5.4.6-1

Version 5.4.7-2.1: BGP support added for IEx510, x550 series

Version 5.4.7-2.4: BGP support added for IE300 series

# neighbor attribute-unchanged

**Overview** Use this command to advertise unchanged BGP or BGP4+ attributes to the specified BGP or BGP4+ neighbor.

Use the **no** variant of this command to disable this function.

**Syntax**

```
neighbor <neighborid> attribute-unchanged
{as-path|next-hop|med}
```

```
no neighbor <neighborid> attribute-unchanged
{as-path|next-hop|med}
```

| Parameter | Description | |
|---|---|---|
| *<neighborid>* | {*<ip-address>*\|*ipv6-addr>*\|*<peer-group>*} | |
| | *<ip-address>* | Specify the address of an IPv4 BGP neighbor, in dotted decimal notation A.B.C.D. |
| | *<ipv6-addr>* | Specify the address of an IPv6 BGP4+ neighbor, entered in hexadecimal in the format X:X::X:X. |
| | *<peer-group>* | Enter the name of an existing peer-group. For information on how to create peer groups, refer to the neighbor peer-group (add a neighbor) command, and neighbor route-map command. When this parameter is used with this command, the command applies on all peers in the specified group. |
| as-path | AS path attribute. | |
| next-hop | Next hop attribute. | |
| med | Multi Exit Discriminator. | |

**Mode [BGP]** Router Configuration or IPv4 Address Family Configuration

**Mode [BGP4+]** IPv6 Address Family Configuration

**Usage notes** Note that specifying this command with the optional **as-path** parameter has the same effect as invoking the neighbor transparent-as command.

Note this specifying this command with the optional **next-hop** parameter has the same effect as invoking the neighbor transparent-nexthop command.

**Examples [BGP]**

```
awplus# configure terminal
awplus(config)# router bgp 10
awplus(config-router)# neighbor 10.10.0.75 attribute-unchanged
as-path med
awplus# configure terminal
awplus(config)# router bgp 10
awplus(config-router)# no neighbor 10.10.0.75
attribute-unchanged as-path med
awplus# configure terminal
awplus(config)# router bgp 10
awplus(config-router)# address-family ipv4
awplus(config-router-af)# neighbor 10.10.0.75
attribute-unchanged as-path med
awplus# configure terminal
awplus(config)# router bgp 10
awplus(config-router)# address-family ipv4
awplus(config-router-af)# no neighbor 10.10.0.75
attribute-unchanged as-path med
awplus# configure terminal
awplus(config)# router bgp 10
awplus(config-router)# neighbor group1 peer-group
awplus(config-router)# neighbor 10.10.0.75 remote-as 10
awplus(config-router)# neighbor 10.10.0.75 peer-group group1
awplus(config-router)# neighbor group1 attribute-unchanged
as-path med
awplus# configure terminal
awplus(config)# router bgp 10
awplus(config-router)# no neighbor group1 attribute-unchanged
as-path med
```

**Examples [BGP4+]**

```
awplus# configure terminal
awplus(config)# router bgp 10
awplus(config-router)# address-family ipv6
awplus(config-router-af)# neighbor 2001:0db8:010d::1
attribute-unchanged as-path med
```

```
awplus# configure terminal
awplus(config)# router bgp 10
awplus(config-router)# address-family ipv6
awplus(config-router-af)# no neighbor 2001:0db8:010d::1
attribute-unchanged as-path med
```

```
awplus# configure terminal
awplus(config)# router bgp 10
awplus(config-router)# neighbor group1 peer-group
awplus(config-router)# neighbor 2001:0db8:010d::1 remote-as 10
awplus(config-router)# address-family ipv6
awplus(config-router-af)# neighbor 2001:0db8:010d::1
peer-group group1
awplus(config-router-af)# neighbor group1 attribute-unchanged
as-path med
```

```
awplus# configure terminal
awplus(config)# router bgp 10
awplus(config-router)# address-family ipv6
awplus(config-router-af)# no neighbor group1
attribute-unchanged as-path med
```

**Related commands**

neighbor peer-group (add a neighbor)

neighbor route-map

neighbor transparent-as

neighbor transparent-nexthop

**Command changes**

Added to AlliedWare Plus prior to 5.4.6-1

Version 5.4.7-2.1: BGP support added for IEx510, x550 series

Version 5.4.7-2.4: BGP support added for IE300 series

# neighbor capability graceful-restart

**Overview** Use this command to configure the device to advertise the Graceful Restart Capability to BGP and BGP4+ neighbors.

Use the **no** variant of this command to configure the device so it does not advertise the Graceful Restart Capability to its neighbor.

**Syntax**

```
neighbor <neighborid> capability graceful-restart
no neighbor <neighborid> capability graceful-restart
```

| Parameter | Description | |
|---|---|---|
| `<neighborid>` | {*<ip-address>* \| *<ipv6-addr>* \| *<peer-group>*} | |
| | *<ip-address>* | Specify the address of an IPv4 BGP neighbor, in dotted decimal notation A.B.C.D. |
| | `<ipv6-addr>` | Specify the address of an IPv6 BGP4+ neighbor, entered in hexadecimal in the format X:X::X:X. |
| | *<peer-group>* | Enter the name of an existing peer-group. For information on how to create peer groups, refer to the neighbor peer-group (add a neighbor) command, and neighbor route-map command. When this parameter is used with this command, the command applies on all peers in the specified group. |

**Default** Disabled

**Mode [BGP]** Router Configuration or IPv4 Address Family Configuration

**Mode [BGP4+]** IPv6 Address Family Configuration

**Usage** Use the **neighbor capability graceful-restart** command to advertise to the BGP or BGP4+ neighbor routers the capability of graceful restart. First specify the BGP or BGP4+ neighbor's **remote-as** identification number as assigned by the neighbor router.

The graceful restart capability is advertised only when the graceful restart capability has been enabled using the bgp graceful-restart command.

**Examples [BGP]**

```
awplus# configure terminal
awplus(config)# router bgp 10
awplus(config-router)# neighbor 10.10.10.50 capability
graceful-restart
awplus# configure terminal
awplus(config)# router bgp 10
awplus(config-router)# no neighbor 10.10.10.50 capability
graceful-restart
awplus# configure terminal
awplus(config)# router bgp 10
awplus(config-router)# address-family ipv4
awplus(config-router-af)# neighbor 10.10.10.50 capability
graceful-restart
awplus# configure terminal
awplus(config)# router bgp 10
awplus(config-router)# address-family ipv4
awplus(config-router-af)# no neighbor 10.10.10.50 capability
graceful-restart
awplus# configure terminal
awplus(config)# router bgp 10
awplus(config-router)# neighbor group1 peer-group
awplus(config-router)# neighbor 10.10.10.50 remote-as 10
awplus(config-router)# neighbor 10.10.10.50 peer-group group1
awplus(config-router)# neighbor group1 capability
graceful-restart
awplus# configure terminal
awplus(config)# router bgp 10
awplus(config-router)# no neighbor group1 capability
graceful-restart
```

**Examples [BGP4+]**

```
awplus# configure terminal
awplus(config)# router bgp 10
awplus(config-router)# address-family ipv6
awplus(config-router-af)# neighbor 2001:0db8:010d::1
capability graceful-restart
```

```
awplus# configure terminal
awplus(config)# router bgp 10
awplus(config-router)# address-family ipv6
awplus(config-router-af)# no neighbor 2001:0db8:010d::1
capability graceful-restart
```

```
awplus# configure terminal
awplus(config)# router bgp 10
awplus(config-router)# neighbor group1 peer-group
awplus(config-router)# neighbor 2001:0db8:010d::1 remote-as 10
awplus(config-router)# address-family ipv6
awplus(config-router-af)# neighbor 2001:0db8:010d::1
peer-group group1
awplus(config-router-af)# neighbor group1 capability
graceful-restart
```

```
awplus# configure terminal
awplus(config)# router bgp 10
awplus(config-router)# address-family ipv6
awplus(config-router-af)# no neighbor group1 capability
graceful-restart
```

**Related commands**

bgp graceful-restart

neighbor peer-group (add a neighbor)

neighbor route-map

restart bgp graceful (BGP only)

**Command changes**

Added to AlliedWare Plus prior to 5.4.6-1

Version 5.4.7-2.1: BGP support added for IEx510, x550 series

Version 5.4.7-2.4: BGP support added for IE300 series

# neighbor capability orf prefix-list

**Overview** Use this command to advertise ORF (Outbound Route Filters) capability to neighbors. Use this command to dynamically filter updates. The BGP speaker can advertise a prefix list with prefixes it wishes the peer to prune or filter from outgoing updates.

Use the **no** variant of this command to disable this function.

**Syntax**

```
neighbor <neighborid> capability orf prefix-list
{both|receive|send}
```

```
no neighbor <neighborid> capability orf prefix-list
{both|receive|send}
```

| Parameter | Description | |
|---|---|---|
| `<neighborid>` | {*<ip-address>*\|*<ipv6-addr>*\|*<peer-group>*} | |
| | `<ip-address>` | Specify the address of an IPv4 BGP neighbor, in dotted decimal notation A.B.C.D. |
| | `<ipv6-addr>` | Specify the address of an IPv6 BGP4+ neighbor, entered in hexadecimal in the format X:X::X:X. |
| | `<peer-group>` | Enter the name of an existing peer-group. For information on how to create peer groups, refer to the neighbor peer-group (add a neighbor) command, and neighbor route-map command. When this parameter is used with this command, the command applies on all peers in the specified group. |
| `orf` | Advertises ORF capability to its neighbors. | |
| `both` | Indicates that the local router can send ORF entries to its peer as well as receive ORF entries from its peer. | |
| `receive` | Indicates that the local router is willing to receive ORF entries from its peer. | |
| `send` | Indicates that the local router is willing to send ORF entries to its peer. | |

**Mode [BGP]** Router Configuration or IPv4 Address Family Configuration

**Mode [BGP4+]** IPv6 Address Family Configuration

**Default** Disabled

**Usage notes** Outbound Route Filters (ORFs) send and receive capabilities to lessen the number of updates exchanged between neighbors. By filtering updates, this option minimizes generating and processing of updates. The local router advertises the ORF capability in `send` mode and the remote router receives the ORF capability in

**receive** mode applying the filter as outbound policy. The two routers exchange updates to maintain the ORF for each router. Only an individual router or a peer-group can be configured to be in **receive** or **send** mode. A peer-group member cannot be configured in **receive** or **send** mode.

**Examples [BGP]**

```
awplus# configure terminal
awplus(config)# router bgp 10
awplus(config-router)# neighbor 10.10.0.5 capability orf
prefix-list both
awplus# configure terminal
awplus(config)# router bgp 10
awplus(config-router)# no neighbor 10.10.0.5 capability orf
prefix-list both
awplus# configure terminal
awplus(config)# router bgp 10
awplus(config-router)# address-family ipv4
awplus(config-router)# neighbor 10.10.0.5 capability orf
prefix-list both
awplus# configure terminal
awplus(config)# router bgp 10
awplus(config-router)# address-family ipv4
awplus(config-router)# no neighbor 10.10.0.5 capability orf
prefix-list both
awplus# configure terminal
awplus(config)# router bgp 10
awplus(config-router)# neighbor group1 peer-group
awplus(config-router)# neighbor 10.10.0.5 remote-as 10
awplus(config-router)# neighbor 10.10.0.5 peer-group group1
awplus(config-router)# neighbor group1 capability orf
prefix-list both
awplus# configure terminal
awplus(config)# router bgp 10
awplus(config-router)# no neighbor group1 capability orf
prefix-list both
```

**Examples [BGP4+]**

```
awplus# configure terminal
awplus(config)# router bgp 10
awplus(config-router)# address-family ipv6
awplus(config-router)# neighbor 2001:0db8:010d::1 capability
orf prefix-list both
awplus# configure terminal
awplus(config)# router bgp 10
awplus(config-router)# address-family ipv6
awplus(config-router)# no neighbor 2001:0db8:010d::1 capability
orf prefix-list both
awplus# configure terminal
awplus(config)# router bgp 10
awplus(config-router)# neighbor group1 peer-group
awplus(config-router)# neighbor 2001:0db8:010d::1 remote-as 10
awplus(config-router)# address-family ipv6
awplus(config-router-af)# neighbor 2001:0db8:010d::1
peer-group group1
awplus(config-router-af)# neighbor group1 capability orf
prefix-list both
awplus# configure terminal
awplus(config)# router bgp 10
awplus(config-router)# address-family ipv6
awplus(config-router-af)# no neighbor group1 capability orf
prefix-list both
```

**Related commands**

neighbor capability orf prefix-list

neighbor peer-group (add a neighbor)

neighbor route-map

**Command changes**

Added to AlliedWare Plus prior to 5.4.6-1

Version 5.4.7-2.1: BGP support added for IEx510, x550 series

Version 5.4.7-2.4: BGP support added for IE300 series

# neighbor capability route-refresh

**Overview** Use this command to advertise route-refresh capability to the specified BGP and BGP4+ neighbors.

Use the **no** variant of this command to disable this function

**Syntax**

```
neighbor <neighborid> capability route-refresh
no neighbor <neighborid> capability route-refresh
```

| Parameter | Description | |
|---|---|---|
| *<neighborid>* | {*<ip-address>* \| *ipv6-addr>* \| *<peer-group>*} | |
| | *<ip-address>* | Specify the address of an IPv4 BGP neighbor, in dotted decimal notation A.B.C.D. |
| | *<ipv6-addr>* | Specify the address of an IPv6 BGP4+ neighbor, entered in hexadecimal in the format X:X::X:X. |
| | *<peer-group>* | Enter the name of an existing peer-group. For information on how to create peer groups, refer to the neighbor peer-group (add a neighbor) command, and neighbor route-map command. When this parameter is used with this command, the command applies on all peers in the specified group. |

**Mode** Router Configuration

**Default** Enabled

**Usage** Use this command to advertise to peer about route refresh capability support. If route refresh capability is supported, then router can dynamically request that the peer readvertises its Adj-RIB-Out.

**Examples [BGP]**

```
awplus# configure terminal
awplus(config)# router bgp 10
awplus(config-router)# neighbor 10.10.10.1 capability
route-refresh
awplus# configure terminal
awplus(config)# router bgp 10
awplus(config-router)# no neighbor 10.10.10.1 capability
route-refresh
awplus# configure terminal
awplus(config)# router bgp 10
awplus(config-router)# neighbor group1 peer-group
awplus(config-router)# neighbor 10.10.1.1 remote-as 10
awplus(config-router)# neighbor 10.10.1.1 peer-group group1
awplus(config-router)# neighbor group1 capability route-refresh
awplus# configure terminal
awplus(config)# router bgp 10
awplus(config-router)# no neighbor group1 capability
route-refresh
```

**Examples [BGP4+]**

```
awplus# configure terminal
awplus(config)# router bgp 10
awplus(config-router)# neighbor 2001:0db8:010d::1 capability
route-refresh
awplus# configure terminal
awplus(config)# router bgp 10
awplus(config-router)# no neighbor 2001:0db8:010d::1 capability
route-refresh
awplus# configure terminal
awplus(config)# router bgp 10
awplus(config-router)# neighbor group1 peer-group
awplus(config-router)# neighbor 2001:0db8:010d::1 remote-as 10
awplus(config-router)# address-family ipv6
awplus(config-router-af)# neighbor 2001:0db8:010d::1
peer-group group1
awplus(config-router-af)# exit
awplus(config-router)# neighbor group1 capability route-refresh
awplus# configure terminal
awplus(config)# router bgp 10
awplus(config-router)# no neighbor group1 capability
route-refresh
```

**Related commands**

neighbor peer-group (add a neighbor)

neighbor route-map

**Command changes**

Added to AlliedWare Plus prior to 5.4.6-1

Version 5.4.7-2.1: BGP support added for IEx510, x550 series

Version 5.4.7-2.4: BGP support added for IE300 series

# neighbor collide-established

**Overview** Use this command to specify including a BGP or BGP4+ neighbor, already in an 'established' state, for conflict resolution when a TCP connection collision is detected.

Use the **no** variant of this command to remove a BGP or BGP4+ neighbor, already in an 'established' state, for conflict resolution when a TCP connection collision is detected.

**Syntax**

```
neighbor <neighborid> collide-established
no neighbor <neighborid> collide-established
```

| Parameter | Description | |
|---|---|---|
| *<neighborid>* | *{<ip-address>\|<ipv6-addr>\|<peer-group>}* | |
| | *<ip-address>* | Specify the address of an IPv4 BGP neighbor, in dotted decimal notation A.B.C.D. |
| | *<ipv6-addr>* | Specify the address of an IPv6 BGP4+ neighbor, entered in hexadecimal in the format X:X::X:X. |
| | *<peer-group>* | Enter the name of an existing peer-group. For information on how to create peer groups, refer to the neighbor peer-group (add a neighbor) command, and neighbor route-map command. When this parameter is used with this command, the command applies on all peers in the specified group. |

**Mode** Router Configuration

**Usage notes** This command must be used only when specially required. It is not required in most network deployments.

The associated functionality of including an 'established' neighbor into TCP connection collision conflict resolution is automatically enabled when neighbor is configured for BGP graceful-restart.

**Examples [BGP]**

```
awplus# configure terminal
awplus(config)# router bgp 10
awplus(config-router)# neighbor 10.10.10.1 collide-established
awplus# configure terminal
awplus(config)# router bgp 10
awplus(config-router)# no neighbor 10.10.10.1
collide-established
awplus# configure terminal
awplus(config)# router bgp 10
awplus(config-router)# neighbor group1 peer-group
awplus(config-router)# neighbor 10.10.10.1 remote-as 10
awplus(config-router)# neighbor 10.10.10.1 peer-group group1
awplus(config-router)# neighbor group1 collide-established
awplus# configure terminal
awplus(config)# router bgp 10
awplus(config-router)# no neighbor group1 collide-established
```

**Examples [BGP4+]**

```
awplus# configure terminal
awplus(config)# router bgp 10
awplus(config-router)# neighbor 2001:0db8:010d::1
collide-established
awplus# configure terminal
awplus(config)# router bgp 10
awplus(config-router)# no neighbor 2001:0db8:010d::1
collide-established
awplus# configure terminal
awplus(config)# router bgp 10
awplus(config-router)# neighbor group1 peer-group
awplus(config-router)# neighbor 2001:0db8:010d::1 remote-as 10
awplus(config-router)# address-family ipv6
awplus(config-router-af)# neighbor 2001:0db8:010d::1
peer-group group1
awplus(config-router-af)# exit
awplus(config-router)# neighbor group1 collide-established
awplus# configure terminal
awplus(config)# router bgp 10
awplus(config-router)# no neighbor group1 collide-established
```

**Related commands**

neighbor peer-group (add a neighbor)

neighbor route-map

**Command changes**

Added to AlliedWare Plus prior to 5.4.6-1

Version 5.4.7-2.1: BGP support added for IEx510, x550 series

Version 5.4.7-2.4: BGP support added for IE300 series

# neighbor default-originate

**Overview** Use this command to allow a BGP or BGP4+ local router to send the default route to a neighbor.

Use the **no** variant of this command to send no route as a default route.

**Syntax**

```
neighbor {<neighborid>} default-originate [route-map
<routemap-name>]
```

```
no neighbor {<neighborid>} default-originate [route-map
<routemap-name>]
```

| Parameter | Description | |
|---|---|---|
| *<neighborid>* | *{<ip-address>\|<ipv6-addr>\|<peer-group>}* | |
| | *<ip-address>* | Specify the address of an IPv4 BGP neighbor, in dotted decimal notation A.B.C.D. |
| | *<ipv6-addr>* | Specify the address of an IPv6 BGP4+ neighbor, entered in hexadecimal in the format X:X::X:X. |
| | *<peer-group>* | Enter the name of an existing peer-group. For information on how to create peer groups, refer to the neighbor peer-group (add a neighbor) command, and neighbor route-map command. When this parameter is used with this command, the command applies on all peers in the specified group. |
| route-map | If a route-map is specified, then the route table must contain at least one route that matches the permit criteria of the route map before the default route will be advertised to the specified neighbor. | |
| *<routemap-name>* | Enter the route-map name. | |

**Mode [BGP]** Router Configuration or IPv4 Address Family Configuration

**Mode [BGP4+]** IPv6 Address Family Configuration

**Examples [BGP]**

```
awplus# configure terminal
awplus(config)# router bgp 10
awplus(config-router)# neighbor 10.10.10.1 default-originate
route-map myroute
awplus# configure terminal
awplus(config)# router bgp 10
awplus(config-router)# no neighbor 10.10.10.1 default-originate
route-map myroute
awplus# configure terminal
awplus(config)# router bgp 10
awplus(config)# address-family ipv4
awplus(config-router-af)# neighbor 10.10.10.1
default-originate route-map myroute
awplus# configure terminal
awplus(config)# router bgp 10
awplus(config)# address-family ipv4
awplus(config-router-af)# no neighbor 10.10.10.1
default-originate route-map myroute
awplus# configure terminal
awplus(config)# router bgp 10
awplus(config-router)# neighbor group1 peer-group
awplus(config-router)# neighbor 10.10.10.1 remote-as 10
awplus(config-router)# neighbor 10.10.10.1 peer-group group1
awplus(config-router)# neighbor group1 default-originate
route-map myroute
awplus# configure terminal
awplus(config)# router bgp 10
awplus(config-router)# no neighbor group1 default-originate
route-map myroute
```

**Examples [BGP4+]**

```
awplus# configure terminal
awplus(config)# router bgp 10
awplus(config-router)# address-family ipv6
awplus(config-router-af)# neighbor 2001:0db8:010d::1
default-originate route-map myroute
```

```
awplus# configure terminal
awplus(config)# router bgp 10
awplus(config-router)# address-family ipv6
awplus(config-router-af)# no neighbor 2001:0db8:010d::1
default-originate route-map myroute
```

```
awplus# configure terminal
awplus(config)# router bgp 10
awplus(config-router)# neighbor group1 peer-group
awplus(config-router)# neighbor 2001:0db8:010d::1 remote-as 10
awplus(config-router)# address-family ipv6
awplus(config-router-af)# neighbor 2001:0db8:010d::1
peer-group group1
awplus(config-router-af)# neighbor group1 default-originate
route-map myroute
```

```
awplus# configure terminal
awplus(config)# router bgp 10
awplus(config-router)# address-family ipv6
awplus(config-router-af)# no neighbor group1 default-originate
route-map myroute
```

**Related commands**

neighbor peer-group (add a neighbor)

neighbor route-map

**Command changes**

Added to AlliedWare Plus prior to 5.4.6-1

Version 5.4.7-2.1: BGP support added for IEx510, x550 series

Version 5.4.7-2.4: BGP support added for IE300 series

# neighbor description

**Overview** Use this command to associate a description with a BGP or a BGP4+ neighbor. We recommend adding descriptions to defined neighbors, so any network administrators or network engineers can see a description of connected BGP or BGP4+ peers on the device.

Use the **no** variant of this command to remove the description from a BGP or a BGP4+ neighbor.

**Syntax**

```
neighbor <neighborid> description <description>
no neighbor <neighborid> description [<description>]
```

| Parameter | Description | |
|---|---|---|
| *<neighborid>* | {*<ip-address>* \| *<ipv6-addr>* \| *<peer-group>*} | |
| | *<ip-address>* | Specify the address of an IPv4 BGP neighbor, in dotted decimal notation A.B.C.D. |
| | *<ipv6-addr>* | Specify the address of an IPv6 BGP4+ neighbor, entered in hexadecimal in the format X:X::X:X. |
| | *<peer-group>* | Enter the name of an existing peer-group. For information on how to create peer groups, refer to the neighbor peer-group (add a neighbor) command, and neighbor route-map command. When this parameter is used with this command, the command applies on all peers in the specified group. |
| *<description>* | Enter up to 80 characters of text describing the neighbor. | |

**Mode [BGP]** Router Configuration or IPv4 Address Family Configuration

**Mode [BGP4+]** Router Configuration

**Examples [BGP]**

```
awplus# configure terminal
awplus(config)# router bgp 10
awplus(config-router)# neighbor 10.10.10.1 description Backup
router for sales
awplus# configure terminal
awplus(config)# router bgp 10
awplus(config-router)# no neighbor 10.10.10.1 description
awplus# configure terminal
awplus(config)# router bgp 10
awplus(config-router)# neighbor group1 peer-group
awplus(config-router)# neighbor 10.10.10.1 remote-as 10
awplus(config-router)# neighbor 10.10.10.1 peer-group group1
awplus(config-router)# neighbor group1 description Backup
router for sales
awplus# configure terminal
awplus(config)# router bgp 10
awplus(config-router)# neighbor group1 description Backup
router for sales.
```

**Examples [BGP4+]**

```
awplus# configure terminal
awplus(config)# router bgp 10
awplus(config-router)# neighbor 2001:0db8:010d::1 description
Backup router for sales
awplus# configure terminal
awplus(config)# router bgp 10
awplus(config-router)# no neighbor 2001:0db8:010d::1
description
awplus# configure terminal
awplus(config)# router bgp 10
awplus(config-router)# neighbor group1 peer-group
awplus(config-router)# neighbor 2001:0db8:010d::1 remote-as 10
awplus(config-router)# address-family ipv6
awplus(config-router-af)# neighbor 2001:0db8:010d::1
peer-group group1
awplus(config-router-af)# exit
awplus(config-router)# neighbor group1 description Backup
router for sales
awplus# configure terminal
awplus(config)# router bgp 10
awplus(config-router)# no neighbor group1 description Backup
router for sales
```

**Related commands**

neighbor peer-group (add a neighbor)

neighbor route-map

**Command changes**

Added to AlliedWare Plus prior to 5.4.6-1

Version 5.4.7-2.1: BGP support added for IEx510, x550 series

Version 5.4.7-2.4: BGP support added for IE300 series

# neighbor disallow-infinite-holdtime

**Overview** Use this command to disallow the configuration of infinite holdtime for BGP and BGP4+.

Use the **no** variant of this command to allow the configuration of infinite holdtime for BGP or BGP4+.

**Syntax [BGP]**

```
neighbor {<ip-address>} disallow-infinite-holdtime
no neighbor {<ip-address>} disallow-infinite-holdtime
```

**Syntax [BGP4+]**

```
neighbor {<ipv6-addr>} disallow-infinite-holdtime
no neighbor {<ipv6-addr>} disallow-infinite-holdtime
```

| Parameter | Description |
|---|---|
| *<ip-address>* | Specify the address of an IPv4 BGP neighbor, in dotted decimal notation A.B.C.D. |
| *<ipv6-addr>* | Specify the address of an IPv6 BGP4+ neighbor, entered in hexadecimal in the format X:X::X:X. |

**Mode** Router Configuration

**Usage** This command enables the local BGP or BGP4+ speaker to reject holdtime “0” seconds from the peer during exchange of open messages or the user during configuration.

The **no** variant of this command allows the BGP speaker to accept “0” holdtime from the peer or during configuration.

**Examples [BGP]** To enable the **disallow-infinite-holdtime** feature on the BGP speaker with the IP address of `10.10.10.1`, enter the command:

```
awplus# configure terminal
awplus(config)# router bgp 10
awplus(config-router)# neighbor 10.10.10.1
disallow-infinite-holdtime
```

To disable the **disallow-infinite-holdtime** feature on the BGP speaker with the IP address of `10.10.10.10`, enter the command:

```
awplus# configure terminal
awplus(config)# router bgp 10
awplus(config-router)# no neighbor 10.10.10.1
disallow-infinite-holdtime
```

**Examples [BGP4+]**

To enable the **disallow-infinite-holdtime** feature on the BGP4+ speaker with the IPv6 address of `2001:0db8:010d::1`, enter the commands:

```
awplus# configure terminal
awplus(config)# router bgp 10
awplus(config-router)# neighbor
disallow-infinite-holdtime2001:0db8:010d::1
```

To disable the **disallow-infinite-holdtime** feature on the BGP4+ speaker with the IPv6 address of `2001:0db8:010d::1`, enter the commands:

```
awplus# configure terminal
awplus(config)# router bgp 10
awplus(config-router)# no neighbor
disallow-infinite-holdtime2001:0db8:010d::1
```

**Related commands**

neighbor timers

**Command changes**

Added to AlliedWare Plus prior to 5.4.6-1

Version 5.4.7-2.1: BGP support added for IEx510, x550 series

Version 5.4.7-2.4: BGP support added for IE300 series

# neighbor dont-capability-negotiate

**Overview** Use this command to disable capability negotiation for BGP and BGP4+.

The capability negotiation is performed by default. This command is used to allow compatibility with older BGP versions that have no capability parameters used in open messages between peers.

Use the **no** variant of this command to enable capability negotiation.

**Syntax**

```
neighbor <neighborid> dont-capability-negotiate
no neighbor <neighborid> dont-capability-negotiate
```

| Parameter | Description | |
|---|---|---|
| `<neighborid>` | {*<ip-address>* \| *<ipv6-addr>* \| *<peer-group>*} | |
| | `<ip-address>` | Specify the IPv4 address of the BGP neighbor in dotted decimal, in the format A.B.C.D. |
| | `<ipv6-addr>` | Specify the IPv6 address of the BGP4+ neighbor, entered in hexadecimal in the format X:X::X:X. |
| | `<peer-group>` | Enter the name of an existing peer-group. For information on how to create peer groups, refer to the neighbor peer-group (add a neighbor) and neighbor route-map commands. When this parameter is used with this command, the command applies on all peers in the specified group. |

**Mode** Router Configuration

**Examples [BGP]**

```
awplus# configure terminal
awplus(config)# router bgp 10
awplus(config-router)# neighbor 10.10.0.34
dont-capability-negotiate
awplus# configure terminal
awplus(config)# router bgp 10
awplus(config-router)# no neighbor 10.10.0.34
dont-capability-negotiate
awplus# configure terminal
awplus(config)# router bgp 10
awplus(config-router)# neighbor group1 peer-group
awplus(config-router)# neighbor 10.10.10.34 remote-as 100
awplus(config-router)# neighbor 10.10.10.34 peer-group group1
awplus(config-router)# neighbor group1
dont-capability-negotiate
awplus# configure terminal
awplus(config)# router bgp 10
awplus(config-router)# no neighbor group1
dont-capability-negotiate
```

**Examples [BGP4+]**

```
awplus# configure terminal
awplus(config)# router bgp 10
awplus(config-router)# neighbor 2001:0db8:010d::1
dont-capability-negotiate
awplus# configure terminal
awplus(config)# router bgp 10
awplus(config-router)# no neighbor 2001:0db8:010d::1
dont-capability-negotiate
awplus# configure terminal
awplus(config)# router bgp 10
awplus(config-router)# neighbor group1 peer-group
awplus(config-router)# neighbor 2001:0db8:010d::1 remote-as 100
awplus(config-router)# address-family ipv6
awplus(config-router-af)# neighbor 2001:0db8:010d::1
peer-group group1
awplus(config-router-af)# exit
awplus(config-router)# neighbor group1
dont-capability-negotiate
awplus# configure terminal
awplus(config)# router bgp 10
awplus(config-router)# no neighbor group1
dont-capability-negotiate
```

**Related commands**

neighbor peer-group (add a neighbor)

neighbor route-map

**Command changes**

Added to AlliedWare Plus prior to 5.4.6-1

Version 5.4.7-2.1: BGP support added for IEx510, x550 series

Version 5.4.7-2.4: BGP support added for IE300 series

# neighbor ebgp-multihop

**Overview** Use this command to accept and attempt BGP or BGP4+ connections to external peers on indirectly connected networks.

Effectively, this command sets the TTL value in the BGP or BGP4+ packets that the router sends to the neighbor, so that the packets may traverse the network route to the neighbor.

The device will not establish a connection to a multihop neighbor, if the only route to the multihop peer is a default route.

Use the **no** variant of this command to return to the default.

**Syntax**

```
neighbor <neighborid> ebgp-multihop [<count>]
no neighbor <neighborid> ebgp-multihop [<count>]
```

| Parameter | Description | |
|---|---|---|
| *<neighborid>* | {*<ip-address* \| *ipv6-addr* \| *<peer-group>*} | |
| | *<ip-addr>* | Specify the address of an IPv4 BGP neighbor, entered in dotted decimal notation A.B.C.D. |
| | *<ipv6-addr>* | Specify the address of an IPv6 BGP4+ neighbor, entered in hexadecimal in the format X:X::X:X. |
| | *<peer-group>* | Enter the name of an existing peer-group. For information on how to create peer groups, refer to the neighbor peer-group (add a neighbor) command, and neighbor route-map command. When this parameter is used with this command, the command applies on all peers in the specified group. |
| *<count>* | *<1-255>* The Maximum hop count, that is set in the TTL field of the BGP packets. If this optional parameter is not specified with the command, then the Maximum hop count is set to 255. | |

**Mode [BGP]** Router Configuration or IPv4 Address Family Configuration

**Mode [BGP4+]** Router Configuration

**Examples [BGP]**

```
awplus# configure terminal
awplus(config)# router bgp 10
awplus(config-router)# neighbor 10.10.10.34 remote-as 10
awplus(config-router)# neighbor 10.10.10.34 ebgp-multihop 5
awplus# configure terminal
awplus(config)# router bgp 10
awplus(config-router)# no neighbor 10.10.10.34 ebgp-multihop 5
awplus# configure terminal
awplus(config)# router bgp 10
awplus(config-router)# neighbor group1 peer-group
awplus(config-router)# neighbor 10.10.10.34 remote-as 10
awplus(config-router)# neighbor 10.10.10.34 peer-group group1
awplus(config-router)# neighbor group1 ebgp-multihop 5
awplus# configure terminal
awplus(config)# router bgp 10
awplus(config-router)# no neighbor group1 ebgp-multihop 5
```

**Examples [BGP4+]**

```
awplus# configure terminal
awplus(config)# router bgp 10
awplus(config-router)# neighbor 2001:0db8:010d::1 remote-as 10
awplus(config-router)# neighbor 2001:0db8:010d::1
ebgp-multihop 5
awplus# configure terminal
awplus(config)# router bgp 10
awplus(config-router)# no neighbor 2001:0db8:010d::1
ebgp-multihop 5
awplus# configure terminal
awplus(config)# router bgp 10
awplus(config-router)# neighbor group1 peer-group
awplus(config-router)# neighbor 2001:0db8:010d::1 remote-as 10
awplus(config-router)# address-family ipv6
awplus(config-router-af)# neighbor 2001:0db8:010d::1
peer-group group1
awplus(config-router-af)# exit
awplus(config-router)# neighbor group1 ebgp-multihop 5
awplus# configure terminal
awplus(config)# router bgp 10
awplus(config-router)# no neighbor group1 ebgp-multihop 5
```

**Related commands**

neighbor ebgp-multihop

neighbor peer-group (add a neighbor)

neighbor route-map

**Command changes**

Added to AlliedWare Plus prior to 5.4.6-1

Version 5.4.7-2.1: BGP support added for IEx510, x550 series

Version 5.4.7-2.4: BGP support added for IE300 series

# neighbor enforce-multihop

**Overview** Use this command to enforce the requirement that BGP and BGP4+ neighbors form multihop connections.

Use the **no** variant of this command to turn off this feature.

**Syntax**

```
neighbor <neighborid> enforce-multihop
no neighbor <neighborid> enforce-multihop
```

| Parameter | Description | |
|---|---|---|
| *<neighborid>* | {*<ip-address>*\|*<ipv6-addr>*\|*<peer-group>*} | |
| | *<ip-address>* | The address of an IPv4 BGP neighbor, in dotted decimal notation A.B.C.D. |
| | *<ipv6-addr>* | The address of an IPv6 BGP4+ neighbor, entered in hexadecimal in the format X:X::X:X. |
| | *<peer-group>* | Name of an existing peer-group. For information on how to create peer groups, refer to the neighbor peer-group (add a neighbor) command, and neighbor route-map command. When this parameter is used with this command, the command applies on all peers in the specified group. |

**Mode [BGP]** Router Configuration or IPv4 Address Family Configuration

**Mode [BGP4+]** Router Configuration

**Examples [BGP]**

```
awplus# configure terminal
awplus(config)# router bgp 10
awplus(config-router)# neighbor 10.10.0.34 remote-as 10
awplus(config-router)# neighbor 10.10.0.34 enforce-multihop
awplus# configure terminal
awplus(config)# router bgp 10
awplus(config-router)# no neighbor 10.10.0.34 enforce-multihop
awplus# configure terminal
awplus(config)# router bgp 10
awplus(config-router)# neighbor group1 peer-group
awplus(config-router)# neighbor 10.10.10.34 remote-as 10
awplus(config-router)# neighbor 10.10.10.34 peer-group group1
awplus(config-router)# neighbor group1 enforce-multihop
awplus# configure terminal
awplus(config)# router bgp 10
awplus(config-router)# no neighbor group1 enforce-multihop
```

**Examples [BGP4+]**

```
awplus# configure terminal
awplus(config)# router bgp 10
awplus(config-router)# neighbor 2001:0db8:010d::1 remote-as 10
awplus(config-router)# neighbor 2001:0db8:010d::1
enforce-multihop
awplus# configure terminal
awplus(config)# router bgp 10
awplus(config-router)# no neighbor 2001:0db8:010d::1
enforce-multihop
awplus# configure terminal
awplus(config)# router bgp 10
awplus(config-router)# neighbor group1 peer-group
awplus(config-router)# neighbor 2001:0db8:010d::1 remote-as 10
awplus(config-router)# address-family ipv6
awplus(config-router-af)# neighbor 2001:0db8:010d::1
peer-group group1
awplus(config-router-af)# exit
awplus(config-router)# neighbor group1 enforce-multihop
awplus# configure terminal
awplus(config)# router bgp 10
awplus(config-router)# no neighbor group1 enforce-multihop
```

**Related commands**

neighbor peer-group (add a neighbor)

neighbor route-map

**Command changes**

Added to AlliedWare Plus prior to 5.4.6-1

Version 5.4.7-2.1: BGP support added for IEx510, x550 series

Version 5.4.7-2.4: BGP support added for IE300 series

# neighbor filter-list

**Overview** This command creates a BGP or BGP4+ filter using an AS (Autonomous System) path list. This command specifies an AS path list, which it then applies to filter updates to and from a BGP or a BGP4+ neighbor

The **no** variant of this command removes the previously specified BGP or BGP4+ filter using access control lists.

**Syntax**

```
neighbor <neighborid> filter-list <listname> {in|out}
no neighbor <neighborid> filter-list <listname> {in|out}
```

| Parameter | Description | |
|---|---|---|
| *<neighborid>* | Specify the identification method for the BGP or BGP4+ peer. Use one of the following formats: | |
| | *<ip-address>* | Specify the address of an IPv4 BGP neighbor, in dotted decimal notation A.B.C.D. |
| | *<ipv6-addr>* | Specify the address of an IPv6 BGP4+ neighbor, entered in hexadecimal in the format X:X::X:X. |
| | *<peer-group>* | Enter the name of an existing peer-group. For information on how to create peer groups, refer to the neighbor peer-group (add a neighbor) command, and neighbor route-map command. When this parameter is used with this command, the command applies on all peers in the specified group. |
| *<listname>* | Specify the name of an AS (Autonomous System) path list. | |
| in | Indicates that incoming advertised routes will be filtered. | |
| out | Indicates that outgoing advertised routes will be filtered. | |

**Mode [BGP]** Router Configuration or IPv4 Address Family Configuration

**Mode [BGP4+]** IPv6 Address Family Configuration

**Usage** This command specifies a filter for updates based on a BGP AS (Autonomous System) path list.

**Examples [BGP]**

```
awplus# configure terminal
awplus(config)# router bgp 10
awplus(config-router)# neighbor 10.10.0.34 filter-list list1
out
awplus# configure terminal
awplus(config)# router bgp 10
awplus(config-router)# no neighbor 10.10.0.34 filter-list list1
out
awplus# configure terminal
awplus(config)# router bgp 10
awplus(config-router)# address-family ipv4
awplus(config-router-af)# neighbor 10.10.0.34 filter-list list1
out
awplus# configure terminal
awplus(config)# router bgp 10
awplus(config-router)# address-family ipv4
awplus(config-router-af)# no neighbor 10.10.0.34 filter-list
list1 out
awplus# configure terminal
awplus(config)# router bgp 10
awplus(config-router)# neighbor group1 peer-group
awplus(config-router)# neighbor 10.10.10.34 remote-as 10
awplus(config-router)# neighbor 10.10.10.34 peer-group group1
awplus(config-router)# neighbor group1 filter-list list1 out
awplus# configure terminal
awplus(config)# router bgp 10
awplus(config-router)# no neighbor group1 filter-list list1 out
```

**Examples [BGP4+]**

```
awplus# configure terminal
awplus(config)# router bgp 10
awplus(config-router)# address-family ipv6
awplus(config-router-af)# neighbor 2001:0db8:010d::1
filter-list list1 out
awplus# configure terminal
awplus(config)# router bgp 10
awplus(config-router)# address-family ipv6
awplus(config-router-af)# no neighbor 2001:0db8:010d::1
filter-list list1 out
awplus# configure terminal
awplus(config)# router bgp 10
awplus(config-router)# neighbor group1 peer-group
awplus(config-router)# neighbor 2001:0db8:010d::1 remote-as 10
awplus(config-router)# address-family ipv6
awplus(config-router-af)# neighbor 2001:0db8:010d::1
peer-group group1
awplus(config-router-af)# neighbor group1 filter-list list1 out
awplus# configure terminal
awplus(config)# router bgp 10
awplus(config-router)# address-family ipv6
awplus(config-router-af)# no neighbor group1 filter-list list1
out
```

**Related commands**

neighbor peer-group (add a neighbor)

neighbor route-map

**Command changes**

Added to AlliedWare Plus prior to 5.4.6-1

Version 5.4.7-2.1: BGP support added for IEx510, x550 series

Version 5.4.7-2.4: BGP support added for IE300 series

# neighbor interface

**Overview** Use this command to configure the interface name of a BGP4+ speaking neighbor.

Use the **no** variant of this command to disable this function.

**Syntax [BGP4+]**

```
neighbor {<ipv6-addr>|<ipaddress>} interface <interface>
no neighbor {<ipv6-addr>|<ipaddress>} interface <interface>
```

| Parameter | Description |
|---|---|
| *<ipaddress>* | Specifies the IPv4 address of the BGP neighbor - entered in dotted decimal notation in the format A.B.C.D. |
| *<ipv6-addr>* | Specifies the IPv6 address of the BGP4+ neighbor, entered in hexadecimal in the format X:X::X:X. |
| *<interface>* | Specifies the interface name of BGP neighbor, e.g. `vlan2`. |

**Mode [BGP4+]** Router Configuration

**Usage [BGP4+]** This command is for use with BGP4+ peering. Use this command for BGP peering with IPv6 link local addresses.

**Examples [BGP4+]**

```
awplus# configure terminal
awplus(config)# router bgp 10
awplus(config-router)# neighbor 10.10.0.72 interface vlan2
awplus# configure terminal
awplus(config)# router bgp 10
awplus(config-router)# no neighbor 10.10.0.72 interface vlan2
awplus# configure terminal
awplus(config)# router bgp 10
awplus(config-router)# neighbor 2001:0db8:010d::1 interface
vlan2
awplus# configure terminal
awplus(config)# router bgp 10
awplus(config-router)# no neighbor 2001:0db8:010d::1 interface
vlan2
```

**Command changes** Added to AlliedWare Plus prior to 5.4.6-1

Version 5.4.7-2.1: BGP support added for IEx510, x550 series

Version 5.4.7-2.4: BGP support added for IE300 series

# neighbor local-as

**Overview** Use this command to configure a local AS number for the specified BGP or BGP4+ neighbor. This overrides the local AS number specified by the router bgp command.

Use the **no** variant of this command to remove the local AS number for the specified BGP or BGP4+ neighbor.

**Syntax**

```
neighbor <neighborid> local-as <as-number>
no neighbor <neighborid> local-as <as-number>
```

| Parameter | Description | |
|---|---|---|
| *<neighborid>* | {*<ip-address>* \| *<ipv6-addr>* \| *<peer-group>*} | |
| | *<ip-address>* | The address of an IPv4 BGP neighbor, in dotted decimal notation A.B.C.D. |
| | *<ipv6-addr>* | The address of an IPv6 BGP4+ neighbor, entered in hexadecimal in the format X:X::X:X. |
| | *<peer-group>* | Enter the name of an existing peer-group. For information on how to create peer groups, refer to the neighbor peer-group (add a neighbor) and neighbor route-map commands. When this parameter is used with this command, the command applies on all peers in the specified group. |
| *<as-number>* | *<1-4294967295>* Neighbor's Autonomous System (AS) number. | |

**Mode [BGP]** Router Configuration or IPv4 Address Family Configuration

**Mode [BGP4+]** Router Configuration

When VRF-lite is configured, this command allows internal BGP loopback connections between named VRFs and the default global routing instance to be configured to act as eBGP connections, instead of only iBGP.

**Usage [BGP4+]** When BGP4+ is configured, this command prepends the ASN as defined by the router bgp command, and adds the ASN as defined by the neighbor local-as command in front of the actual ASN as defined by the router bgp command. This makes the peer believe it is peering with the ASN as defined by the neighbor local-as command.

**Examples [BGP]**

```
awplus# configure terminal
awplus(config)# router bgp 10
awplus(config-router)# neighbor 10.10.0.34 local-as 1
awplus# configure terminal
awplus(config)# router bgp 10
awplus(config-router)# no neighbor 10.10.0.34 local-as 1
awplus# configure terminal
awplus(config)# router bgp 10
awplus(config-router)# neighbor group1 peer-group
awplus(config-router)# neighbor 10.10.10.34 remote-as 10
awplus(config-router)# neighbor 10.10.10.34 peer-group group1
awplus(config-router)# neighbor group1 local-as 1
awplus# configure terminal
awplus(config)# router bgp 10
awplus(config-router)# no neighbor group1 local-as 1
```

**Examples [BGP4+]**

```
awplus# configure terminal
awplus(config)# router bgp 10
awplus(config-router)# neighbor 2001:0db8:010d::1 local-as 1
awplus# configure terminal
awplus(config)# router bgp 10
awplus(config-router)# no neighbor 2001:0db8:010d::1 local-as 1
awplus# configure terminal
awplus(config)# router bgp 10
awplus(config-router)# neighbor group1 peer-group
awplus(config-router)# address-family ipv6
awplus(config-router-af)# neighbor 2001:0db8:010d::1
peer-group group1
awplus(config-router-af)# exit
awplus(config-router)# neighbor group1 local-as 1
awplus# configure terminal
awplus(config)# router bgp 10
awplus(config-router)# no neighbor group1 local-as 1
```

**Related commands**

neighbor peer-group (add a neighbor)

neighbor route-map

router bgp

**Command changes**

Added to AlliedWare Plus prior to 5.4.6-1

Version 5.4.6-2.1: VRF-lite support added to BGP for AR-series products

Version 5.4.7-2.1: BGP support added for IEx510, x550 series

Version 5.4.7-2.4: BGP support added for IE300 series

# neighbor maximum-prefix

**Overview** Use this command to control the number of prefixes that can be received from a BGP or a BGP4+ neighbor.

Use the **no** variant of this command to disable this function. Do not specify threshold to apply the default threshold of 75% for the maximum number of prefixes before this is applied.

**Syntax**

```
neighbor <neighborid> maximum-prefix <maximum>
no neighbor <neighborid> maximum-prefix [<maximum>]
```

| Parameter | Description | |
|---|---|---|
| *<neighborid>* | {*<ip-address>* \| *<ipv6-addr>* \| *<peer-group>*} | |
| | *<ip-address>* | Specify the address of an IPv4 BGP neighbor, in dotted decimal notation A.B.C.D. |
| | *<ipv6-addr>* | Specify the address of an IPv6 BGP4+ neighbor, entered in hexadecimal in the format X:X::X:X. |
| | *<peer-group>* | Name of an existing peer-group. For information on how to create peer groups, refer to the neighbor peer-group (add a neighbor) command, and neighbor route-map command. When this parameter is used with this command, the command applies on all peers in the specified group. |
| *<maximum>* | *<maxprefix>* [*<threshold>*] [warning-only] | |
| *<maxprefix>* | *<1-4294967295>* Specifies the maximum number of prefixes permitted. | |
| *<threshold>* | *<1-100>* Specifies the threshold value, 1 to 100 percent. 75% by default. | |
| warning-only | Only gives a warning message when the limit is exceeded. | |

**Default** The default threshold value is 75%. If the threshold value is not specified this default is applied.

**Mode [BGP]** Router Configuration or IPv4 Address Family Configuration

**Mode [BGP4+]** IPv6 Address Family Configuration

**Usage** The **neighbor maximum-prefix** command allows the configuration of a specified number of prefixes that a BGP or a BGP4+ router is allowed to receive from a neighbor. When the `warning-only` option is not used, if any extra prefixes are received, the router ends the peering. A terminated peer, stays down until the **clear ip bgp** command is used.

**Examples [BGP]**

```
awplus# configure terminal
awplus(config)# router bgp 10
awplus(config-router)# neighbor 10.10.0.72 maximum-prefix 1244
warning-only
awplus# configure terminal
awplus(config)# router bgp 10
awplus(config-router)# no neighbor 10.10.0.72 maximum-prefix
1244 warning-only
awplus# configure terminal
awplus(config)# router bgp 10
awplus(config-router)# neighbor group1 peer-group
awplus(config-router)# neighbor 10.10.10.72 remote-as 10
awplus(config-router)# neighbor 10.10.10.72 peer-group group1
awplus(config-router)# neighbor group1 maximum-prefix 1244
warning-only
awplus# configure terminal
awplus(config)# router bgp 10
awplus(config-router)# no neighbor group1 maximum-prefix 1244
warning-only
```

**Examples [BGP4+]**

```
awplus# configure terminal
awplus(config)# router bgp 10
awplus(config-router)# address-family ipv6
awplus(config-router-af)# neighbor 2001:0db8:010d::1
maximum-prefix 1244 warning-only
```

```
awplus# configure terminal
awplus(config)# router bgp 10
awplus(config-router)# address-family ipv6
awplus(config-router-af)# no neighbor 2001:0db8:010d::1
maximum-prefix 1244 warning-only
```

```
awplus# configure terminal
awplus(config)# router bgp 10
awplus(config-router)# neighbor group1 peer-group
awplus(config-router)# address-family ipv6
awplus(config-router-af)# neighbor 2001:0db8:010d::1
peer-group group1
awplus(config-router-af)# neighbor group1 maximum-prefix 1244
warning-only
```

```
awplus# configure terminal
awplus(config)# router bgp 10
awplus(config-router)# address-family ipv6
awplus(config-router-af)# no neighbor group1 maximum-prefix
1244 warning-only
```

**Related commands**

neighbor peer-group (add a neighbor)

neighbor route-map

**Command changes**

Added to AlliedWare Plus prior to 5.4.6-1

Version 5.4.7-2.1: BGP support added for IEx510, x550 series

Version 5.4.7-2.4: BGP support added for IE300 series

# neighbor next-hop-self

**Overview** Use this command to configure the BGP or BGP4+ router as the next hop for a BGP or BGP4+ speaking neighbor or peer group.

Use the **no** variant of this command to disable this feature.

**Syntax**

```
neighbor <neighborid> next-hop-self
no neighbor <neighborid> next-hop-self
```

| Parameter | Description | |
|---|---|---|
| *<neighborid>* | {*<ip-address>* \| *<ipv6-addr>* \| *<peer-group>*} | |
| | *<ip-address>* | Specify the address of an IPv4 BGP neighbor, in dotted decimal notation A.B.C.D. |
| | *<ipv6-addr>* | Specify the address of an IPv6 BGP4+ neighbor, entered in hexadecimal in the format X:X::X:X. |
| | *<peer-group>* | Enter the name of an existing peer-group. For information on how to create peer groups, refer to the neighbor peer-group (add a neighbor) command, and neighbor route-map command. When this parameter is used with this command, the command applies on all peers in the specified group. |

**Mode [BGP]** Router Configuration or IPv4 Address Family Configuration

**Mode [BGP4+]** IPv6 Address Family Configuration

**Usage notes** This command allows a BGP or BGP4+ router to change the next hop information that is sent to the iBGP peer. The next hop information is set to the IP address of the interface used to communicate with the neighbor.

This command can be run for a specific VRF instance.

**Examples [BGP]**

```
awplus# configure terminal
awplus(config)# router bgp 10
awplus(config-router)# neighbor 10.10.0.72 next-hop-self
awplus# configure terminal
awplus(config)# router bgp 10
awplus(config-router)# no neighbor 10.10.0.72 next-hop-self
awplus# configure terminal
awplus(config)# router bgp 10
awplus(config-router)# address-family ipv4
awplus(config-router)# neighbor 10.10.0.72 next-hop-self
awplus# configure terminal
awplus(config)# router bgp 10
awplus(config-router)# address-family ipv4
awplus(config-router)# no neighbor 10.10.0.72 next-hop-self
awplus# configure terminal
awplus(config)# router bgp 10
awplus(config-router)# neighbor group1 peer-group
awplus(config-router)# neighbor 10.10.10.72 remote-as 10
awplus(config-router)# neighbor 10.10.10.72 peer-group group1
awplus(config-router)# neighbor group1 next-hop-self
awplus# configure terminal
awplus(config)# router bgp 10
awplus(config-router)# no neighbor group1 next-hop-self
```

**Examples [BGP4+]**

```
awplus# configure terminal
awplus(config)# router bgp 10
awplus(config-router)# address-family ipv6
awplus(config-router-af)# neighbor 2001:0db8:010d::1
next-hop-self
awplus# configure terminal
awplus(config)# router bgp 10
awplus(config-router)# address-family ipv6
awplus(config-router-af)# no neighbor 2001:0db8:010d::1
next-hop-self
awplus# configure terminal
awplus(config)# router bgp 10
awplus(config-router)# neighbor group1 peer-group
awplus(config-router)# neighbor 2001:0db8:010d::1 remote-as 10
awplus(config-router)# address-family ipv6
awplus(config-router-af)# neighbor 2001:0db8:010d::1
peer-group group1
awplus(config-router-af)# neighbor group1 next-hop-self
awplus# configure terminal
awplus(config)# router bgp 10
awplus(config-router)# address-family ipv6
awplus(config-router-af)# no neighbor group1 next-hop-self
```

**Related commands**

neighbor peer-group (add a neighbor)

neighbor route-map

**Command changes**

Added to AlliedWare Plus prior to 5.4.6-1

Version 5.4.7-2.1: BGP support added for IEx510, x550 series

Version 5.4.7-2.4: BGP support added for IE300 series

# neighbor override-capability

**Overview** Use this command to override a capability negotiation result for BGP and BGP4+.

Use the **no** variant of with this command to disable this function.

**Syntax**

```
neighbor <neighborid> override-capability
no neighbor <neighborid> override-capability
```

| Parameter | Description | |
|---|---|---|
| *<neighborid>* | {*<ip-address>* \| *<ipv6-addr>* \| *<peer-group>*} | |
| | *<ip-address>* | Specify the address of an IPv4 BGP neighbor, in dotted decimal notation A.B.C.D. |
| | *<ipv6-addr>* | Specify the address of an IPv6 BGP4+ neighbor, entered in hexadecimal in the format X:X::X:X. |
| | *<peer-group>* | Enter the name of an existing peer-group. For information on how to create peer groups, refer to the neighbor peer-group (add a neighbor) command, and neighbor route-map command. When this parameter is used with this command, the command applies on all peers in the specified group. |

**Mode** Router Configuration

**Examples [BGP]**

```
awplus# configure terminal
awplus(config)# router bgp 10
awplus(config-router)# neighbor 10.10.0.72 override-capability
awplus# configure terminal
awplus(config)# router bgp 10
awplus(config-router)# no neighbor 10.10.0.72
override-capability
awplus# configure terminal
awplus(config)# router bgp 10
awplus(config-router)# neighbor group1 peer-group
awplus(config-router)# neighbor 10.10.10.72 remote-as 10
awplus(config-router)# neighbor 10.10.10.72 peer-group group1
awplus(config-router)# neighbor group1 override-capability
awplus# configure terminal
awplus(config)# router bgp 10
awplus(config-router)# no neighbor group1 override-capability
```

**Examples [BGP4+]**

```
awplus# configure terminal
awplus(config)# router bgp 12
awplus(config-router)# neighbor 2001:0db8:010d::1
override-capability
```

```
awplus# configure terminal
awplus(config)# router bgp 12
awplus(config-router)# no neighbor 2001:0db8:010d::1
override-capability
```

```
awplus# configure terminal
awplus(config)# router bgp 12
awplus(config-router)# neighbor group1 peer-group
awplus(config-router)# neighbor 2001:0db8:010d::1 remote-as 10
awplus(config-router)# address-family ipv6
awplus(config-router-af)# neighbor 2001:0db8:010d::1
peer-group group1
awplus(config-router-af)# exit
awplus(config-router)# neighbor group1 override-capability
```

```
awplus# configure terminal
awplus(config)# router bgp 12
awplus(config-router)# no neighbor group1 override-capability
```

**Related commands**

neighbor peer-group (add a neighbor)

neighbor route-map

**Command changes**

Added to AlliedWare Plus prior to 5.4.6-1

Version 5.4.7-2.1: BGP support added for IEx510, x550 series

Version 5.4.7-2.4: BGP support added for IE300 series

# neighbor passive

**Overview** Use this command to configure the local BGP or BGP4+ router to be passive with regard to the specified BGP or BGP4+ neighbor. This has the effect that the BGP or BGP4+ router will not attempt to initiate connections to this BGP or BGP4+ neighbor, but will accept incoming connection attempts from the BGP or BGP4+ neighbor.

Use the **no** variant of this command to disable this function.

**Syntax**

```
neighbor <neighborid> passive
no neighbor <neighborid> passive
```

| Parameter | Description | |
|---|---|---|
| *<neighborid>* | {*<ip-address>* \| *<ipv6-addr>* \| *<peer-group>*} | |
| | *<ip-address>* | Specify the address of an IPv4 BGP neighbor, in dotted decimal notation A.B.C.D. |
| | *<ipv6-addr>* | Specify the address of an IPv6 BGP4+ neighbor, entered in hexadecimal in the format X:X::X:X. |
| | *<peer-group>* | Enter the name of an existing peer-group. For information on how to create peer groups, refer to the neighbor peer-group (add a neighbor) command, and neighbor route-map command. When this parameter is used with this command, the command applies on all peers in the specified group. |

**Mode [BGP]** Router Configuration or IPv4 Address Family Configuration

**Mode [BGP4+]** Router Configuration

**Examples [BGP]**

```
awplus# configure terminal
awplus(config)# router bgp 10
awplus(config-router)# neighbor 10.10.0.72 passive
awplus# configure terminal
awplus(config)# router bgp 10
awplus(config-router)# no neighbor 10.10.0.72 passive
awplus# configure terminal
awplus(config)# router bgp 10
awplus(config-router)# neighbor group1 peer-group
awplus(config-router)# neighbor 10.10.10.72 remote-as 10
awplus(config-router)# neighbor 10.10.10.72 peer-group group1
awplus(config-router)# neighbor group1 passive
awplus# configure terminal
awplus(config)# router bgp 10
awplus(config-router)# no neighbor group1 passive
```

**Examples [BGP4+]**

```
awplus# configure terminal
awplus(config)# router bgp 10
awplus(config-router)# neighbor 2001:0db8:010d::1 passive
awplus# configure terminal
awplus(config)# router bgp 10
awplus(config-router)# no neighbor 2001:0db8:010d::1 passive
awplus# configure terminal
awplus(config)# router bgp 10
awplus(config-router)# neighbor group1 peer-group
awplus(config-router)# neighbor 2001:0db8:010d::1 remote-as 10
awplus(config-router)# address-family ipv6
awplus(config-router-af)# neighbor 2001:0db8:010d::1
peer-group group1
awplus(config-router-af)# exit
awplus(config-router)# neighbor group1 passive
awplus# configure terminal
awplus(config)# router bgp 10
awplus(config-router)# no neighbor group1 passive
```

**Related commands**

neighbor peer-group (add a neighbor)

neighbor route-map

**Command changes**

Added to AlliedWare Plus prior to 5.4.6-1

Version 5.4.7-2.1: BGP support added for IEx510, x550 series

Version 5.4.7-2.4: BGP support added for IE300 series

# neighbor password

**Overview** Use this command to enable MD5 authentication on a TCP connection between BGP and BGP4+ neighbors. No authentication is applied by default. To setup authentication for the session, you must first apply authentication on each connected peer for the session.

Use the **no** variant of this command to disable this function.

**Syntax [BGP]**

```
neighbor {<ip-address>|<peer-group-name>} password <password>
no neighbor {<ip-address>|<peer-group-name>} password
[<password>]
```

**Syntax [BGP4+]**

```
neighbor {<ipv6-addr>|<peer-group-name>} password <password>
no neighbor {<ipv6-addr>|<peer-group-name>} password
[<password>]
```

| Parameter | Description |
|---|---|
| *<ip-address>* | Specifies the IP address of the BGP neighbor, in A.B.C.D format. |
| *<ipv6-addr>* | Specifies the IPv6 address of the BGP4+ neighbor, entered in hexadecimal in the format X:X::X:X. |
| *<peer-group-name>* | Name of an existing peer-group. When this parameter is used with this command, the command applies on all peers in the specified group. |
| *<password>* | An alphanumeric string of characters to be used as password. |

**Default** No authentication is applied by default.

**Mode [BGP]** Router Configuration or IPv4 Address Family Configuration

**Mode [BGP4+]** Router Configuration

**Usage notes** When using the *<peer-group-name>* parameter with this command (to apply this command to all peers in the group), see the related commands neighbor peer-group (add a neighbor) and neighbor route-map for information about how to create peer groups first.

**Examples [BGP]** This example specifies the encryption type and the password 'manager' for the neighbor `10.10.10.1`:

```
awplus# configure terminal
awplus(config)# router bgp 10
awplus(config-router)# neighbor 10.10.10.1 password manager
```

This example removes the password set for the neighbor `10.10.10.1`:

```
awplus# configure terminal
awplus(config)# router bgp 10
awplus(config-router)# no neighbor 10.10.10.1 password
```

This example specifies the encryption type and the password 'manager' for the neighbor peer group named 'group1':

```
awplus# configure terminal
awplus(config)# router bgp 10
awplus(config-router)# neighbor group1 peer-group
awplus(config-router)# neighbor 10.10.10.1 remote-as 10
awplus(config-router)# neighbor 10.10.10.1 peer-group group1
awplus(config-router)# neighbor group1 password manager
```

This example removes the password set for the neighbor peer group named `group1`:

```
awplus# configure terminal
awplus(config)# router bgp 10
awplus(config-router)# no neighbor group1 password
```

**Examples (VRF-lite)**

This example specifies the password ('manager') for the neighbor peer group named 'group1' for an IPv4 address-family VRF instance name 'red', and router bgp 10:

```
awplus# configure terminal
awplus(config)# router bgp 10
awplus(config-router)# address-family ipv4 vrf red
awplus(config-router-af)# neighbor 10.10.10.1 password manager
```

This example removes the password ('manager') for the neighbor peer group named 'group1' for an IPv4 address-family, VRF instance name 'red', and router bgp 10:

```
awplus# configure terminal
awplus(config)# router bgp 10
awplus(config-router)# address-family ipv4 vrf red
awplus(config-router-af)# no neighbor 10.10.10.1 password
manager
```

This example specifies the password ('manager') for the neighbor peer group named 'group1' for an IPv4 address-family, VRF instance name 'red', and router bgp 10:

```
awplus# configure terminal
awplus(config)# router bgp 10
awplus(config-router)# neighbor group1 peer-group
awplus(config-router)# neighbor 10.10.10.1 remote-as 10
awplus(config-router)# neighbor 10.10.10.1 peer-group group1
awplus(config-router)# address-family ipv4 vrf red
awplus(config-router-af)# neighbor group1 password manager
```

**Examples [BGP4+]**

This example specifies the encryption type and the password 'manager' for the neighbor `2001:0db8:010d::1`:

```
awplus# configure terminal
awplus(config)# router bgp 10
awplus(config-router)# neighbor password manager
2001:0db8:010d::1
```

This example removes the password set for the neighbor `2001:0db8:010d::1`:

```
awplus# configure terminal
awplus(config)# router bgp 10
awplus(config-router)# no neighbor password 2001:0db8:010d::1
```

This example specifies the encryption type and the password 'manager' for the neighbor peer group named `group1`:

```
awplus# configure terminal
awplus(config)# router bgp 10
awplus(config-router)# neighbor group1 peer-group
awplus(config-router)# neighbor  remote-as 102001:0db8:010d::1
awplus(config-router)# address-family ipv6
awplus(config-router-af)# neighbor peer-group group1
2001:0db8:010d::1
awplus(config-router-af)# exit
awplus(config-router)# neighbor group1 password manager
```

This example removes the password set for the neighbor peer group named 'group1':

```
awplus# configure terminal
awplus(config)# router bgp 10
awplus(config-router)# no neighbor group1 password
```

**Related commands**

neighbor peer-group (add a neighbor)

neighbor route-map

**Command changes**

Added to AlliedWare Plus prior to 5.4.6-1

Version 5.4.6-2.1: VRF-lite support added to BGP for AR-series products

Version 5.4.7-2.1: BGP support added for IEx510, x550 series

Version 5.4.7-2.4: BGP support added for IE300 series

# neighbor peer-group (add a neighbor)

**Overview** Use this command to add a BGP or a BGP4+ neighbor to an existing peer-group.

Use the **no** variant of this command to disable this function.

**Syntax [BGP]**

```
neighbor <ip-address> peer-group <peer-group>
no neighbor <ip-address> peer-group <peer-group>
```

**Syntax [BGP4+]**

```
neighbor <ipv6-addr> peer-group <peer-group>
no neighbor <ipv6-addr> peer-group <peer-group>
```

| Parameter | Description |
|---|---|
| *<ip-address>* | Specify the IPv4 address of the BGP neighbor, entered in the format A.B.C.D. |
| *<ipv6-addr>* | Specify the IPv6 address of the BGP4+ neighbor, entered in hexadecimal in the format X:X::X:X. |
| *<peer-group>* | Enter the name of the peer-group. When this parameter is used with this command, the command applies on all peers in the specified group. |

**Mode [BGP]** Router Configuration or IPv4 Address Family Configuration

**Mode [BGP4+]** IPv6 Address Family Configuration

**Usage** Use this command to add neighbors with the same update policies to a peer group. This facilitates the updates of various policies, such as, distribute and filter lists. The peer-group is then configured easily with many of the neighbor commands. Any changes made to the peer group affect all members.

To create a peer-group use the neighbor port command and then use this command to add neighbors to the group.

**Examples [BGP]** This example shows a new peer-group `group1` and the addition of a neighbor `10.10.0.63` to the group.

```
awplus# configure terminal
awplus(config)# router bgp 10
awplus(config-router)# neighbor group1 peer-group
awplus(config-router)# neighbor 10.10.0.63 peer-group group1
```

This example shows a new peer-group `group1` and the removal of a neighbor `10.10.0.63` to the group.

```
awplus# configure terminal
awplus(config)# router bgp 10
awplus(config-router)# neighbor group1 peer-group
awplus(config-router)# no neighbor 10.10.0.63 peer-group group1
```

**Examples [BGP4+]**

This example shows a new peer-group `group1` and the addition of a neighbor `2001:0db8:010d::1` to the group.

```
awplus# configure terminal
awplus(config)# router bgp 10
awplus(config-router)# neighbor group1 peer-group
awplus(config-router)# address-family ipv6
awplus(config-router-af)# neighbor  peer-group
group12001:0db8:010d::1
```

This example shows a new peer-group `group1` and the removal of a neighbor `2001:0db8:010d::1` to the group.

```
awplus# configure terminal
awplus(config)# router bgp 10
awplus(config-router)# neighbor group1 peer-group
awplus(config-router)# address-family ipv6
awplus(config-router-af)# no neighbor  peer-group
group12001:0db8:010d::1
```

**Related commands**

neighbor peer-group (create a peer-group)

neighbor port

**Command changes**

Added to AlliedWare Plus prior to 5.4.6-1

Version 5.4.7-2.1: BGP support added for IEx510, x550 series

Version 5.4.7-2.4: BGP support added for IE300 series

# neighbor peer-group (create a peer-group)

**Overview**

Use this command to create a peer-group for BGP and BGP4+.

Use the **no** variant of this command to disable this function.

**Syntax**

```
neighbor <peer-group> peer-group
no neighbor <peer-group> peer-group
```

| Parameter | Description |
|---|---|
| *<peer-group>* | Enter the name of the peer-group. |

**Mode [BGP]**

Router Configuration or IPv4 Address Family Configuration

**Mode [BGP4+]**

Router Configuration

**Usage notes**

Neighbors with the same update policies are grouped into peer groups. This facilitates the updates of various policies, such as, distribute and filter lists.

The peer-group is then configured easily with many of the neighbor commands. Any changes made to the peer group affect all members.

Use this command to create a peer-group, then use the neighbor peer-group (add a neighbor) command to add neighbors to the group.

**Examples**

```
awplus# configure terminal
awplus(config)# router bgp 10
awplus(config-router)# neighbor group1 peer-group
awplus# configure terminal
awplus(config)# router bgp 10
awplus(config-router)# no neighbor group1 peer-group
```

**Related commands**

neighbor peer-group (add a neighbor)

**Command changes**

Added to AlliedWare Plus prior to 5.4.6-1

Version 5.4.7-2.1: BGP support added for IEx510, x550 series

Version 5.4.7-2.4: BGP support added for IE300 series

# neighbor port

**Overview** Use this command to specify the TCP port to which packets are sent to on a BGP or a BGP4+ neighbor. TCP port 179 is the default port used to connect BGP and BGP4+ peers. You can specify a different destination port for the TCP session with this command.

Use the **no** variant of this command to reset the port number back to the default value (TCP port 179).

**Syntax [BGP]**

```
neighbor <neighborid> port <portnum>
no neighbor <neighborid> port [<portnum>]
```

| Parameter | Description | |
|---|---|---|
| *<neighborid>* | {*<ip-address>* \| *ipv6-addr>* \| *<peer-group>*} | |
| | *<ip-address>* | Specify the address of an IPv4 BGP neighbor, in dotted decimal notation A.B.C.D. |
| | *<ipv6-addr>* | Specify the address of an IPv6 BGP4+ neighbor, entered in hexadecimal in the format X:X::X:X. |
| | *<peer-group>* | Enter the name of an existing peer-group. For information on how to create peer groups, refer to the neighbor peer-group (add a neighbor) command, and neighbor route-map command. When this parameter is used with this command, the command applies on all peers in the specified group. |
| *<portnum>* | *<0-65535>* Specifies the TCP port number. | |

**Default** TCP port 179 is the default port used to connect BGP and BGP4+ peers.

**Mode [BGP]** Router Configuration or IPv4 Address Family Configuration

**Mode [BGP4+]** Router Configuration

**Examples [BGP]**

```
awplus# configure terminal
awplus(config)# router bgp 12
awplus(config-router)# neighbor 10.10.10.10 port 643
awplus# configure terminal
awplus(config)# router bgp 12
awplus(config-router)# no neighbor 10.10.10.10 port 643
awplus# configure terminal
awplus(config)# router bgp 12
awplus(config-router)# neighbor group1 peer-group
awplus(config-router)# neighbor 10.10.10.1 remote-as 10
awplus(config-router)# neighbor 10.10.10.1 peer-group group1
awplus(config-router)# neighbor group1 port 643
awplus# configure terminal
awplus(config)# router bgp 12
awplus(config-router)# no neighbor group1 port 643
```

**Examples [BGP4+]**

```
awplus# configure terminal
awplus(config)# router bgp 12
awplus(config-router)# neighbor  port 6432001:0db8:010d::1
awplus# configure terminal
awplus(config)# router bgp 12
awplus(config-router)# no neighbor  port 6432001:0db8:010d::1
awplus# configure terminal
awplus(config)# router bgp 12
awplus(config-router)# neighbor group1 peer-group
awplus(config-router)# neighbor 2001:0db8:010d::1 remote-as 10
awplus(awplus-router)# address-family ipv6
awplus(config-router-af)# neighbor 2001:0db8:010d::1
peer-group group1
awplus(config-router-af)# exit
awplus(config-router)# neighbor group1 port 643
awplus# configure terminal
awplus(config)# router bgp 12
awplus(config-router)# no neighbor group1 port 643
```

**Related commands**

neighbor peer-group (add a neighbor)

neighbor route-map

**Command changes**

Added to AlliedWare Plus prior to 5.4.6-1

Version 5.4.7-2.1: BGP support added for IEx510, x550 series

Version 5.4.7-2.4: BGP support added for IE300 series

# neighbor prefix-list

**Overview** Use this command to distribute BGP and BGP4+ neighbor information as specified in a prefix list.

Use the **no** variant of this command to remove an entry.

**Syntax**

```
neighbor <neighborid> prefix-list <listname> {in|out}
no neighbor <neighborid> prefix-list <listname> {in|out}
```

| Parameter | Description | |
|---|---|---|
| *<neighborid>* | *<ip-address>\|<ipv6-addr>\|<peer-group>* | |
| | *<ip-address>* | Specify the address of an IPv4 BGP neighbor, in dotted decimal notation A.B.C.D. |
| | *<ipv6-addr>* | Specify the address of an IPv6 BGP4+ neighbor, entered in hexadecimal in the format X:X::X:X. |
| | *<peer-group>* | Enter the name of an existing peer-group. For information on how to create peer groups, refer to the neighbor peer-group (add a neighbor) command, and neighbor route-map command. When this parameter is used with this command, the command applies on all peers in the specified group. |
| *<listname>* | The name of an IP prefix list. | |
| in | Specifies that the IP prefix list applies to incoming advertisements. | |
| out | Specifies that the IP prefix list applies to outgoing advertisements. | |

**Mode [BGP]** Router Configuration or IPv4 Address Family Configuration

**Mode [BGP4+]** IPv6 Address Family Configuration

**Usage notes** Use this command to specify a prefix list for filtering BGP or BGP4+ advertisements. Filtering by prefix list matches the prefixes of routes with those listed in the prefix list. If there is a match, the route is used. An empty prefix list permits all prefixes. If a given prefix does not match any entries of a prefix list, the route is denied access.

The router begins the search at the top of the prefix list, with the sequence number 1. Once a match or deny occurs, the router does not need to go through the rest of the prefix list. For efficiency the most common matches or denies are listed at the top.

The **neighbor distribute-list** command is an alternative to the **neighbor prefix-list** command and only one of them can be used for filtering to the same neighbor in any direction.

**Examples [BGP]**

```
awplus# configure terminal
awplus(config)# ip prefix-list list1 deny 30.0.0.0/24
awplus(config)# router bgp 10
awplus(config-router)# neighbor 10.10.10.1 prefix-list list1 in
awplus# configure terminal
awplus(config)# router bgp 10
awplus(config-router)# no neighbor 10.10.10.1 prefix-list list1
in
awplus# configure terminal
awplus(config)# ip prefix-list list1 deny 30.0.0.0/24
awplus(config)# router bgp 10
awplus(config-router)# address-family ipv4
awplus(config-router-af)# neighbor 10.10.10.1 prefix-list list1
in
awplus# configure terminal
awplus(config)# router bgp 10
awplus(config-router)# address-family ipv4
awplus(config-router-af)# no neighbor 10.10.10.1 prefix-list
list1 in
awplus# configure terminal
awplus(config)# ip prefix-list list1 deny 30.0.0.0/24
awplus(config)# router bgp 10
awplus(config-router)# neighbor group1 peer-group
awplus(config-router)# neighbor 10.10.10.1 remote-as 10
awplus(config-router)# neighbor 10.10.10.1 peer-group group1
awplus(config-router)# neighbor group1 prefix-list list1 in
awplus# configure terminal
awplus(config)# router bgp 10
awplus(config-router)# no neighbor group1 prefix-list list1 in
```

**Examples [BGP4+]**

```
awplus# configure terminal
awplus(config)# ipv6 prefix-list list1 deny
2001:0db8:010d::1/128
awplus(config)# router bgp 10
awplus(config-router)# address-family ipv6
awplus(config-router-af)# neighbor 2001:0db8:: prefix-list
list1 in
awplus# configure terminal
awplus(config)# router bgp 10
awplus(config-router)# address-family ipv6
awplus(config-router-af)# no neighbor 2001:0db8:: prefix-list
list1 in
awplus# configure terminal
awplus(config)# ip prefix-list list1 deny 2001:0db8:010d::1/128
awplus(config)# router bgp 10
awplus(config-router)# neighbor group1 peer-group
awplus(config-router)# neighbor 2001:0db8:010d::1 remote-as 10
awplus(config-router)# address-family ipv6
awplus(config-router-af)# neighbor 2001:0db8:010d::1
peer-group group1
awplus(config-router-af)# neighbor group1 prefix-list list1 in
awplus# configure terminal
awplus(config)# router bgp 10
awplus(config-router)# address-family ipv6
awplus(config-router-af)# no neighbor group1 prefix-list list1
in
```

**Related commands**

ip prefix-list

neighbor peer-group (add a neighbor)

neighbor route-map

**Command changes**

Added to AlliedWare Plus prior to 5.4.6-1

Version 5.4.7-2.1: BGP support added for IEx510, x550 series

Version 5.4.7-2.4: BGP support added for IE300 series

# neighbor remote-as

**Overview** Use this command to configure an internal or external BGP or BGP4+ (iBGP or eBGP) peering relationship with another router.

Use the **no** variant of this command to remove a previously configured BGP or BGP4+ peering relationship.

**Syntax**

```
neighbor <neighborid> remote-as <as-number>
no neighbor <neighborid> remote-as <as-number>
```

**Syntax (VRF- lite)**

```
neighbor <neighborid> remote-as <as-number> [global|vrf
<vrf-name>]
no neighbor <neighborid> remote-as <as-number>
```

| Parameter | Description | |
|---|---|---|
| *<neighborid>* | {*<ip-address>* \| *ipv6-addr>* \| *<peer-group>*} | |
| | *<ip-address>* | Specify the address of an IPv4 BGP neighbor, in dotted decimal notation A.B.C.D. |
| | *<ipv6-addr>* | Specify the address of an IPv6 BGP4+ neighbor, entered in hexadecimal in the format X:X::X:X. |
| | *<peer-group>* | Enter the name of an existing peer-group. For information on how to create peer groups, refer to the neighbor peer-group (add a neighbor) command, and neighbor route-map command. When this parameter is used with this command, the command applies on all peers in the specified group. |
| *<as-number>* | *<1-4294967295>* Neighbor's Autonomous System (AS) number. | |
| global | Specify that the remote neighbor exists locally within the device, in the global routing domain | |
| vrf | Specify that the remote neighbor exists locally within the device, in the specified VRF instance. | |
| *<vrf-name>* | The name of the VRF instance. | |

**Mode [BGP]** Router Configuration or IPv4 Address Family Configuration

**Mode [BGP4+]** Router Configuration

**Usage notes** This command is used to configure iBGP and eBGP peering relationships with other BGP or BGP4+ neighbors. A peer-group support of this command is configured only after creating a specific peer-group. Use the **no** variant of this command to remove a previously configured BGP peering relationship.

The **vrf** and **global** parameters are used to create internal 'loopback' BGP connections within the device between two VRF instances. This is used to leak BGP routes between a named VRF instance and the global routing instance. This requires BGP neighbors to be configured in both the global routing instance and in the named VRF instance.

**Examples [BGP]**

To configure a BGP peering relationship from the neighbor with the IPv4 address 10.10.0.73 with another router:

```
awplus# configure terminal
awplus(config)# router bgp 10
awplus(config-router)# neighbor 10.10.0.73 remote-as 10
```

To remove a configured BGP peering relationship from the neighbor with the IPv4 address 10.10.0.73 from another router:

```
awplus# configure terminal
awplus(config)# router bgp 10
awplus(config-router)# no neighbor 10.10.0.73 remote-as 10
```

To configure a BGP peering relationship from the neighbor with the peer group named group1 with another router:

```
awplus# configure terminal
awplus(config)# router bgp 10
awplus(config-router)# neighbor group1 peer-group
awplus(config-router)# neighbor 10.10.10.1 remote-as 10
awplus(config-router)# neighbor 10.10.10.1 peer-group group1
awplus(config-router)# neighbor group1 remote-as 10
```

To remove a configured BGP peering relationship from the neighbor with the peer group named group1 with another router:

```
awplus# configure terminal
awplus(config)# router bgp 10
awplus(config-router)# no neighbor group1 remote-as 10
```

**Examples [BGP4+]**

To configure a BGP4+ peering relationship with another router:

```
awplus# configure terminal
awplus(config)# router bgp 11
awplus(config-router)# neighbor 2001:0db8:010d::1 remote-as 345
```

To remove a configured BGP4+ peering relationship from another router:

```
awplus# configure terminal
awplus(config)# router bgp 11
awplus(config-router)# no neighbor 2001:0db8:010d::1 remote-as
345
```

To configure a BGP4+ peering relationship from the neighbor with the peer group named group1 with another router:

```
awplus# configure terminal
awplus(config)# router bgp 10
awplus(config-router)# neighbor group1 peer-group
awplus(config-router)# neighbor 2001:0db8:010d::1 remote-as 10
awplus(config-router)# address-family ipv6
awplus(config-router-af)# neighbor 2001:0db8:010d::1
peer-group group1
awplus(config-router-af)# exit
awplus(config-router)# neighbor group1 remote-as 10
```

To remove a configured BGP4+ peering relationship from the neighbor with the peer group named group1 with another router:

```
awplus# configure terminal
awplus(config)# router bgp 10
awplus(config-router)# no neighbor group1 remote-as 10
```

**Command changes**

Added to AlliedWare Plus prior to 5.4.6-1

Version 5.4.6-2.1: VRF-lite support added to BGP for AR-series products

Version 5.4.7-2.1: BGP support added for IEx510, x550 series

Version 5.4.7-2.4: BGP support added for IE300 series

# neighbor remove-private-AS (BGP only)

**Overview** Use this command to remove the private Autonomous System (AS) number from external outbound updates. Use the **no** variant of this command to revert to the default (disabled).

**Syntax**

```
neighbor <neighborid> remove-private-AS
no neighbor <neighborid> remove-private-AS
```

| Parameter | Description | |
|---|---|---|
| *<neighborid>* | {*<ip-address>*\|*<tag>*} | |
| | *<ip-address>* | The address of an IPv4 BGP neighbor, in dotted decimal notation A.B.C.D. |
| | *<tag>* | Name of an existing peer-group. For information on how to create peer groups, refer to the neighbor peer-group (add a neighbor) command, and neighbor remote-as command. When this parameter is used with a command, the command applies on all peers in the specified group. |

**Default** This command is disabled by default.

**Mode** Router Configuration or IPv4 Address Family Configuration

**Usage notes** The private AS numbers range from <64512-65535>. Private AS numbers are not advertised to the Internet. This command is used with external BGP peers only. The router removes the AS numbers only if the update includes private AS numbers. If the update includes both private and public AS numbers, the system treats it as an error.

This command removes private AS numbers for BGP in Router Configuration mode. This command is not supported for BGP4+ in IPv6 Address Family Configuration mode. This command removes a private AS number and makes an update packet with a public AS number as the AS path attribute. So only public AS numbers are entered in Internet BGP routing tables, and private AS numbers are not entered in Internet BGP tables.

For the filtering to apply, both peering devices must be set to use either 2-byte or extended 4- byte ASN (with the same ASN type set on both peers). For example, if a device (which defaults to use a 4-byte ASN), is peered with a device that defaults to a 2-byte ASN, then the device using a 2-byte ASN device also needs to be configured with the command **bgp extended-asn-cap** for the filtering to apply.

**Examples**

```
awplus# configure terminal
awplus(config)# router bgp 10
awplus(config-router)# neighbor 10.10.0.63 remove-private-AS
awplus# configure terminal
awplus(config)# router bgp 10
awplus(config-router)# no neighbor 10.10.0.63 remove-private-AS
```

**Related commands**

show ip bgp (BGP only)

**Command changes**

Added to AlliedWare Plus prior to 5.4.6-1

Version 5.4.7-2.1: BGP support added for IEx510, x550 series

Version 5.4.7-2.4: BGP support added for IE300 series

# neighbor restart-time

**Overview** Use this command to set a different restart-time other than the global restart-time configured using the **bgp graceful-restart** command for BGP and BGP4+.

Use the **no** variant of this command to restore the device to its default state (see the default value of the **bgp graceful-restart** command).

**Syntax**

```
neighbor <neighborid> restart-time <delay-value>
no neighbor <neighborid> restart-time <delay-value>
```

| Parameter | Description | |
|---|---|---|
| *<neighborid>* | {*<ip-address>* \| *<ipv6-addr>* \| *<peer-group>*} | |
| | *<ip-address>* | Specify the address of an IPv4 BGP neighbor, in dotted decimal notation A.B.C.D. |
| | *<ipv6-addr>* | Specify the address of an IPv6 BGP4+ neighbor, entered in hexadecimal in the format X:X::X:X. |
| | *<peer-group>* | Enter the name of an existing peer-group. For information on how to create peer groups, refer to the neighbor peer-group (add a neighbor) command, and neighbor route-map command. When this parameter is used with this command, the command applies on all peers in the specified group. |
| *<delay-value>* | *<1-3600>* | Delay value in seconds. |

**Mode [BGP]** Router Configuration or IPv4 Address Family Configuration

**Mode [BGP4+]** Router Configuration

**Usage** This command takes precedence over the restart-time value specified using the **bgp graceful-restart** command.

The restart-time value is the maximum time that a graceful-restart neighbor waits to come back up after a restart. The default is 120 seconds.

Make sure that the restart time specified using this command does not exceed the stalepath-time specified in the Router Configuration mode.

**Examples [BGP]**

```
awplus# configure terminal
awplus(config)# router bgp 10
awplus(config-router)# neighbor 10.10.10.1 restart-time 45
awplus# configure terminal
awplus(config)# router bgp 10
awplus(config-router)# no neighbor 10.10.10.1 restart-time 45
awplus# configure terminal
awplus(config)# router bgp 10
awplus(config-router)# neighbor group1 peer-group
awplus(config-router)# neighbor 10.10.10.1 remote-as 10
awplus(config-router)# neighbor 10.10.10.1 peer-group group1
awplus(config-router)# neighbor group1 restart-time 45
awplus# configure terminal
awplus(config)# router bgp 10
awplus(config-router)# no neighbor group1 restart-time 45
```

**Examples [BGP4+]**

```
awplus# configure terminal
awplus(config)# router bgp 10
awplus(config-router)# neighbor 2001:0db8:010d::1 restart-time
45
awplus# configure terminal
awplus(config)# router bgp 10
awplus(config-router)# no neighbor 2001:0db8:010d::1
restart-time 45
awplus# configure terminal
awplus(config)# router bgp 10
awplus(config-router)# neighbor group1 peer-group
awplus(config-router)# neighbor 2001:0db8:010d::1 remote-as 10
awplus(config-router)# address-family ipv6
awplus(config-router-af)# neighbor 2001:0db8:010d::1
peer-group group1
awplus(config-router-af)# exit
awplus(config-router)# neighbor group1 restart-time 45
awplus# configure terminal
awplus(config)# router bgp 10
awplus(config-router)# no neighbor group1 restart-time 45
```

**Related commands**

bgp graceful-restart

neighbor peer-group (add a neighbor)

neighbor route-map

**Command changes**

Added to AlliedWare Plus prior to 5.4.6-1

Version 5.4.7-2.1: BGP support added for IEx510, x550 series

Version 5.4.7-2.4: BGP support added for IE300 series

# neighbor route-map

**Overview** Use this command to apply a route map to incoming or outgoing routes for BGP or BGP4+.

Use the **no** variant of this command to remove a route map from a BGP or BGP4+ route.

**Syntax**

```
neighbor <neighborid> route-map <mapname> {in|out}
no neighbor <neighborid> route-map <mapname> {in|out}
```

| Parameter | Description | |
|---|---|---|
| *<neighborid>* | {*<ip-address>* \| *ipv6-addr>* \| *<peer-group>*} | |
| | *<ip-address>* | Specify the address of an IPv4 BGP neighbor, in dotted decimal notation A.B.C.D. |
| | *<ipv6-addr>* | Specify the address of an IPv6 BGP4+ neighbor, entered in hexadecimal in the format X:X::X:X. |
| | *<peer-group>* | Enter the name of an existing peer-group. For information on how to create peer groups, refer to the neighbor peer-group (add a neighbor) command, and neighbor route-map command. When this parameter is used with this command, the command applies on all peers in the specified group. |
| *<mapname>* | Specifies name of the route-map. | |
| in | Specifies that the access list applies to incoming advertisements. | |
| out | Specifies that the access list applies to outgoing advertisements. | |

**Mode [BGP]** Router Configuration or IPv4 Address Family Configuration

**Mode [BGP4+]** IPv6 Address Family Configuration

**Usage notes** Use the **neighbor route-map** command to filter updates and modify attributes. A route map is applied to inbound or outbound updates. Only the routes that pass the route map are sent or accepted in updates.

**Examples [BGP]**

The following example shows the configuration of the route-map name **rmap2** and then the use of this map name in the **neighbor route-map** command for the neighbor with the IPv4 address 10.10.10.1 in the Router Configuration mode.

```
awplus# configure terminal
awplus(config)# route-map rmap2 permit 6
awplus(config-route-map)# match origin incomplete
awplus(config-route-map)# set metric 100
awplus(config-route-map)# exit
awplus(config)# router bgp 10
awplus(config-router)# neighbor 10.10.10.1 route-map rmap2 in
```

The following example shows the removal of the route-map name **rmap2** in the **neighbor route-map** command for the neighbor with the IPv4 address 10.10.10.1 in the Router Configuration mode.

```
awplus# configure terminal
awplus(config)# router bgp 10
awplus(config-router)# no neighbor 10.10.10.1 route-map rmap2
in
```

The following example shows the configuration of the route-map name **rmap2** and then the use of this map name in the **neighbor route-map** command for the neighbor with the IPv4 address 10.10.10.1 in the IPv4 Address Family Configuration mode.

```
awplus# configure terminal
awplus(config)# route-map rmap2 permit 6
awplus(config-route-map)# match origin incomplete
awplus(config-route-map)# set metric 100
awplus(config-route-map)# exit
awplus(config)# router bgp 10
awplus(config-router)# address-family ipv4
awplus(config-router-af)# neighbor 10.10.10.1 route-map rmap2
in
```

The following example shows the removal of the route-map name **rmap2** in the **neighbor route-map** command for the neighbor with the IPv4 address 10.10.10.1 in the IPv4 Address Family Configuration mode.

```
awplus# configure terminal
awplus(config)# router bgp 10
awplus(config-router)# address-family ipv4
awplus(config-router-af)# no neighbor 10.10.10.1 route-map
rmap2 in
```

The following example shows the configuration of the route-map name **rmap2** and then the use of this map name in the **neighbor route-map** command for the neighbor with the peer group named group1 in the Router Configuration mode.

```
awplus# configure terminal
awplus(config)# route-map rmap2 permit 6
awplus(config-route-map)# match origin incomplete
awplus(config-route-map)# set metric 100
awplus(config-route-map)# exit
awplus(config)# router bgp 10
awplus(config-router)# neighbor group1 peer-group
awplus(config-router)# neighbor 10.10.10.1 remote-as 10
awplus(config-router)# neighbor 10.10.10.1 peer-group group1
awplus(config-router)# neighbor group1 route-map rmap2 in
```

The following example shows the removal the route-map name **rmap2** in the **neighbor route-map** command for the neighbor with the peer group named group1 in the Router Configuration mode.

```
awplus# configure terminal
awplus(config)# router bgp 10
awplus(config-router)# no neighbor group1 route-map rmap2 in
```

**Examples [BGP4+]**

The following example shows the configuration of the route-map name **rmap2** and then the use of this map name in the **neighbor route-map** command for the neighbor with the IPv6 address 2001:0db8:010d::1 in the IPv6 Address Family Configuration mode.

```
awplus# configure terminal
awplus(config)# route-map rmap2 permit 6
awplus(config-route-map)# match origin incomplete
awplus(config-route-map)# set metric 100
awplus(config-route-map)# exit
awplus(config)# router bgp 10
awplus(config-router)# address-family ipv6
awplus(config-router-af)# neighbor 2001:0db8:010d::1 route-map
rmap2 in
```

The following example shows the removal of the route-map name **rmap2** in the **neighbor route-map** command for the neighbor with the IPv6 address 2001:0db8:010d::1 in the IPv6 Address Family Configuration mode.

```
awplus# configure terminal
awplus(config)# router bgp 10
awplus(config-router)# address-family ipv6
awplus(config-router-af)# no neighbor 2001:0db8:010d::1
route-map rmap2 in
```

The following example shows the configuration of the route-map name **rmap2** and then the use of this map name in the **neighbor route-map** command for the neighbor with the peer group named group1 in the Router Configuration mode.

```
awplus# configure terminal
awplus(config)# route-map rmap2 permit 6
awplus(config-route-map)# match origin incomplete
awplus(config-route-map)# set metric 100
awplus(config-route-map)# exit
awplus(config)# router bgp 10
awplus(config-router)# neighbor group1 peer-group
awplus(config-router)# neighbor 2001:0db8:010d::1 remote-as 10
awplus(config-router)# address-family ipv6
awplus(config-router-af)# neighbor 2001:0db8:010d::1
peer-group group1
awplus(config-router-af)# neighbor group1 route-map rmap2 in
```

The following example shows the removal the route-map name **rmap2** in the **neighbor route-map** command for the neighbor with the peer group named group1 in the Router Configuration mode.

```
awplus# configure terminal
awplus(config)# router bgp 10
awplus(config-router)# address-family ipv6
awplus(config-router-af)# no neighbor group1 route-map rmap2 in
```

**Related commands**

address-family

neighbor peer-group (add a neighbor)

route-map

**Command changes**

Added to AlliedWare Plus prior to 5.4.6-1

Version 5.4.7-2.1: BGP support added for IEx510, x550 series

Version 5.4.7-2.4: BGP support added for IE300 series

# neighbor route-reflector-client (BGP only)

**Overview** Use this command to configure the router as a BGP route reflector and configure the specified neighbor as its client.

Use the **no** variant of this command to indicate that the neighbor is not a client.

**Syntax**

```
neighbor <neighborid> route-reflector-client
no neighbor <neighborid> route-reflector-client
```

| Parameter | Description | |
|---|---|---|
| *<neighborid>* | {*<ip-address>*\|*<peer-group>*} | |
| | *<ip-address>* | The address of an IPv4 BGP neighbor, in dotted decimal notation A.B.C.D. |
| | *<peer-group>* | Enter the name of an existing peer-group. For information on how to create peer groups, refer to the neighbor peer-group (add a neighbor) command, and neighbor route-map command. When this parameter is used with this command, the command applies on all peers in the specified group. |

**Mode** Router Configuration or IPv4 Address Family Configuration

**Usage notes** Route reflectors are a solution for the explosion of iBGP peering within an autonomous system. By route reflection the number of iBGP peers within an AS is reduced. Use the **neighbor route-reflector-client** command to configure the local router as the route reflector and specify neighbors as its client.

An AS can have more than one route reflector. One route reflector treats the other route reflector as another iBGP speaker.

In the following configuration, Router1 is the route reflector for clients `3.3.3.3` and `2.2.2.2`; it also has a non-client peer `6.6.6.6`:

```
Router1#
router bgp 200
neighbor 3.3.3.3 remote-as 200
neighbor 3.3.3.3 route-reflector-client
neighbor 2.2.2.2 remote-as 200
neighbor 2.2.2.2 route-reflector-client
neighbor 6.6.6.6 remote-as 200
```

**Examples**

```
awplus# configure terminal
awplus(config)# router bgp 10
awplus(config-router)# neighbor 10.10.0.72
route-reflector-client
```

```
awplus# configure terminal
awplus(config)# router bgp 10
awplus(config-router)# no neighbor 10.10.0.72
route-reflector-client
```

**Command changes**

Added to AlliedWare Plus prior to 5.4.6-1

Version 5.4.7-2.1: BGP support added for IEx510, x550 series

Version 5.4.7-2.4: BGP support added for IE300 series

# neighbor route-server-client (BGP only)

**Overview** Use this command to specify the peer as route server client.

Use the **no** variant of this command to disable this function.

**Syntax**

```
neighbor <neighborid> route-server-client
no neighbor <neighborid> route-server-client
```

| Parameter | Description | |
|---|---|---|
| *<neighborid>* | *{<ip-address>\|<peer-group>}* | |
| | *<ip-address>* | The address of an IPv4 BGP neighbor, in dotted decimal notation A.B.C.D. |
| | *<peer-group>* | Enter the name of an existing peer-group. For information on how to create peer groups, refer to the neighbor peer-group (add a neighbor) command, and neighbor route-map command. When this parameter is used with this command, the command applies on all peers in the specified group. |

**Mode** Router Configuration

**Examples**

```
awplus# configure terminal
awplus(config)# router bgp 10
awplus(config-router)# neighbor 10.10.0.72 route-server-client
awplus# configure terminal
awplus(config)# router bgp 10
awplus(config-router)# no neighbor 10.10.0.72
route-server-client
```

**Command changes** Added to AlliedWare Plus prior to 5.4.6-1

Version 5.4.7-2.1: BGP support added for IEx510, x550 series

Version 5.4.7-2.4: BGP support added for IE300 series

# neighbor send-community

**Overview** Use this command to specify that a community attribute should be sent to a BGP or BGP4+ neighbor.

Use the **no** variant of this command to remove the entry for the community attribute.

**Syntax**

```
neighbor <neighborid> send-community {both|extended|standard}
no neighbor <neighborid> send-community
{both|extended|standard}
```

| Parameter | Description | |
|---|---|---|
| *<neighborid>* | *{<ip-address>\|<ipv6-addr>\|<peer-group>}* | |
| | *<ip-address>* | Specify the address of an IPv4 BGP neighbor, in dotted decimal notation A.B.C.D. |
| | *<ipv6-addr>* | Specify the address of an IPv6 BGP4+ neighbor, entered in hexadecimal in the format X:X::X:X. |
| | *<peer-group>* | Enter the name of an existing peer-group. For information on how to create peer groups, refer to the neighbor peer-group (add a neighbor) command, and neighbor route-map command. When this parameter is used with this command, the command applies on all peers in the specified group. |
| `both` | Sends Standard and Extended Community attributes. Specifying this parameter with the **no** variant of this command results in no `standard` or `extended` community attributes being sent. | |
| `extended` | Sends Extended Community attributes. Specifying this parameter with the **no** variant of this command results in no `extended` community attributes being sent. | |
| `standard` | Sends Standard Community attributes. Specifying this parameter with the **no** variant of this command results in no `standard` community attributes being sent. | |

**Default** Both **standard** and **extended** community attributes are sent to a neighbor.

**Mode [BGP]** Router Configuration or IPv4 Address Family Configuration

**Mode [BGP4+]** Router Configuration and IPv6 Address Family Configuration

**Usage notes** This command is used to specify a community attribute to be sent to a neighbor. The community attribute groups destinations in a certain community and applies routing decisions according to those communities. On receiving community attributes the router reannounces them to the neighbor. Only when the **no**

parameter is used with this command the community attributes are not reannounced to the neighbor.

By default, both **standard** and **extended** community attributes are sent to a neighbor.

**Examples [BGP]**

```
awplus# configure terminal
awplus(config)# bgp config-type standard
awplus(config)# router bgp 10
awplus(config-router)# neighbor 10.10.0.72 send-community
extended
```

```
awplus# configure terminal
awplus(config)# bgp config-type standard
awplus(config)# router bgp 10
awplus(config-router)# no neighbor 10.10.0.72 send-community
extended
```

```
awplus# configure terminal
awplus(config)# bgp config-type standard
awplus(config)# router bgp 10
awplus(config-router)# address-family ipv4
awplus(config-router-af)# neighbor 10.10.0.72 send-community
extended
```

```
awplus# configure terminal
awplus(config)# bgp config-type standard
awplus(config)# router bgp 10
awplus(config-router)# address-family ipv4
awplus(config-router-af)# no neighbor 10.10.0.72 send-community
extended
```

```
awplus# configure terminal
awplus(config)# bgp config-type standard
awplus(config)# router bgp 10
awplus(config-router)# neighbor group1 peer-group
awplus(config-router)# neighbor 10.10.10.1 remote-as 10
awplus(config-router)# neighbor 10.10.10.1 peer-group group1
awplus(config-router)# neighbor group1 send-community extended
```

**Examples [BGP4+]**

```
awplus# configure terminal
awplus(config)# bgp config-type standard
awplus(config)# router bgp 10
awplus(config-router)# neighbor 2001:0db8:010d::1
send-community extended
awplus# configure terminal
awplus(config)# bgp config-type standard
awplus(config)# router bgp 10
awplus(config-router)# no neighbor 2001:0db8:010d::1
send-community extended
awplus# configure terminal
awplus(config)# bgp config-type standard
awplus(config)# router bgp 10
awplus(config-router)# address-family ipv6
awplus(config-router-af)# neighbor 2001:0db8:010d::1
send-community extended
awplus# configure terminal
awplus(config)# bgp config-type standard
awplus(config)# router bgp 10
awplus(config-router)# address-family ipv6
awplus(config-router-af)# no neighbor 2001:0db8:010d::1
send-community extended
awplus# configure terminal
awplus(config)# bgp config-type standard
awplus(config)# router bgp 10
awplus(config-router)# neighbor group1 peer-group
awplus(config-router)# neighbor 2001:0db8:010d::1 remote-as 10
awplus(config-router)# address-family ipv6
awplus(config-router-af)# neighbor 2001:0db8:010d::1
peer-group group1
awplus(config-router-af)# exit
awplus(config-router)# neighbor group1 send-community extended
awplus# configure terminal
awplus(config)# bgp config-type standard
awplus(config)# router bgp 10
awplus(config-router)# no neighbor group1 send-community
extended
```

**Related commands**

bgp config-type

neighbor peer-group (add a neighbor)

neighbor route-map

**Command changes**

Added to AlliedWare Plus prior to 5.4.6-1

Version 5.4.7-2.1: BGP support added for IEx510, x550 series

Version 5.4.7-2.4: BGP support added for IE300 series

# neighbor shutdown

**Overview** Use this command to disable a peering relationship with a BGP or BGP4+ neighbor.

Use the **no** variant of this command to re-enable the BGP or BGP4+ neighbor.

**Syntax**

```
neighbor <neighborid> shutdown
no neighbor <neighborid> shutdown
```

| Parameter | Description | |
|---|---|---|
| *<neighborid>* | {*<ip-address>*\|*<peer-group>*} | |
| | *<ip-address>* | Specify the address of an IPv4 BGP neighbor, in dotted decimal notation A.B.C.D. |
| | *<ipv6-addr>* | Specify the address of an IPv6 BGP4+ neighbor, entered in hexadecimal in the format X:X::X:X. |
| | *<peer-group>* | Enter the name of an existing peer-group. For information on how to create peer groups, refer to the neighbor peer-group (add a neighbor) command, and neighbor route-map command. When this parameter is used with this command, the command applies on all peers in the specified group. |

**Mode [BGP]** Router Configuration or IPv4 Address Family Configuration

**Mode [BGP4+]** Router Configuration

**Usage notes** This command shuts down any active session for the specified BGP or BGP4+ neighbor and clears all related routing data.

**Examples [BGP]**

```
awplus# configure terminal
awplus(config)# router bgp 10
awplus(config-router)# neighbor 10.10.0.72 shutdown
awplus# configure terminal
awplus(config)# router bgp 10
awplus(config-router)# no neighbor 10.10.0.72 shutdown
awplus# configure terminal
awplus(config)# router bgp 10
awplus(config-router)# neighbor group1 shutdown
awplus# configure terminal
awplus(config)# router bgp 10
awplus(config-router)# no neighbor group1 shutdown
```

**Examples [BGP4+]**

```
awplus# configure terminal
awplus(config)# router bgp 10
awplus(config-router)# neighbor 2001:0db8:010d::1 shutdown
awplus# configure terminal
awplus(config)# router bgp 10
awplus(config-router)# no neighbor 2001:0db8:010d::1 shutdown
awplus# configure terminal
awplus(config)# router bgp 10
awplus(config-router)# neighbor group1 shutdown
awplus# configure terminal
awplus(config)# router bgp 10
awplus(config-router)# no neighbor group1 shutdown
```

**Related commands**

neighbor peer-group (add a neighbor)

neighbor route-map

**Command changes**

Added to AlliedWare Plus prior to 5.4.6-1

Version 5.4.7-2.1: BGP support added for IEx510, x550 series

Version 5.4.7-2.4: BGP support added for IE300 series

# neighbor soft-reconfiguration inbound

**Overview** Use this command to configure the device to start storing all updates from the BGP or BGP4+ neighbor, without any consideration of any inward route filtering policy that might be applied to the connection with this BGP or BGP4+ neighbor. This is so that the full set of the neighbor's updates are available locally to be used in a soft-reconfiguration event.

You may need to apply this older method of clearing routes if the peer does not support route refresh.

Use the **no** variant of this command to disable this function for a BGP or BGP4+ neighbor.

**Syntax**

```
neighbor <neighborid> soft-reconfiguration inbound
no neighbor <neighborid> soft-reconfiguration inbound
```

| Parameter | Description | |
|---|---|---|
| *<neighborid>* | {*<ip-address>* \| *<ipv6-addr>* \| *<peer-group>*} | |
| | *<ip-address>* | Specify the address of an IPv4 BGP neighbor, in dotted decimal notation A.B.C.D. |
| | *<ipv6-addr>* | Specify the address of an IPv6 BGP4+ neighbor, entered in hexadecimal in the format X:X::X:X. |
| | *<peer-group>* | Enter the name of an existing peer-group. For information on how to create peer groups, refer to the neighbor peer-group (add a neighbor) command, and neighbor route-map command. When this parameter is used with this command, the command applies on all peers in the specified group. |

**Mode [BGP]** Router Configuration or IPv4 Address Family Configuration

**Mode [BGP4+]** IPv6 Address Family Configuration

**Usage** Use this command to store updates for inbound soft reconfiguration. Soft-reconfiguration may be used in lieu of BGP route refresh capability. Using this command enables local storage of all the received routes and their attributes. This requires additional memory. When a soft reset (inbound) is done on this neighbor, the locally stored routes are re- processed according to the inbound policy. The BGP neighbor connection is not affected.

**Examples [BGP]**

```
awplus# configure terminal
awplus(config)# router bgp 12
awplus(config-router)# neighbor 10.10.10.10
soft-reconfiguration inbound
awplus# configure terminal
awplus(config)# router bgp 12
awplus(config-router)# no neighbor 10.10.10.10
soft-reconfiguration inbound
awplus# configure terminal
awplus(config)# router bgp 12
awplus(config-router)# address-family ipv4
awplus(config-router-
af)# neighbor 10.10.10.10 soft-reconfiguration inbound
awplus# configure terminal
awplus(config)# router bgp 12
awplus(config-router)# address-family ipv4
awplus(config-router-
af)# no neighbor 10.10.10.10 soft-reconfiguration inbound
awplus# configure terminal
awplus(config)# router bgp 10
awplus(config-router)# neighbor group1 peer-group
awplus(config-router)# neighbor 10.10.10.1 remote-as 10
awplus(config-router)# neighbor 10.10.10.1 peer-group group1
awplus(config-router)# neighbor group1 soft-reconfiguration
inbound
awplus# configure terminal
awplus(config)# router bgp 12
awplus(config-router)# no neighbor group1 soft-reconfiguration
inbound
```

**Examples [BGP4+]**

```
awplus# configure terminal
awplus(config)# router bgp 12
awplus(config-router)# address-family ipv6
awplus(config-router-af)# neighbor 2001:0db8:010d::1
soft-reconfiguration inbound
awplus# configure terminal
awplus(config)# router bgp 12
awplus(config-router)# address-family ipv6
awplus(config-router-af)# no neighbor 2001:0db8:010d::1
soft-reconfiguration inbound
awplus# configure terminal
awplus(config)# router bgp 10
awplus(config-router)# neighbor group1 peer-group
awplus(config-router)# neighbor 2001:0db8:010d::1 remote-as 10
awplus(config-router)# address-family ipv6
awplus(config-router-af)# neighbor 2001:0db8:010d::1
peer-group group1
awplus(config-router-af)# neighbor group1 soft-reconfiguration
inbound
awplus# configure terminal
awplus(config)# router bgp 12
awplus(config-router)# address-family ipv6
awplus(config-router-
af)# no neighbor group1 soft-reconfiguration inbound
```

**Related commands**

neighbor peer-group (add a neighbor)

neighbor route-map

**Command changes**

Added to AlliedWare Plus prior to 5.4.6-1

Version 5.4.7-2.1: BGP support added for IEx510, x550 series

Version 5.4.7-2.4: BGP support added for IE300 series

# neighbor timers

**Overview** Use this command to set the keepalive, holdtime, and connect timers for a specific BGP or BGP4+ neighbor.

Use the **no** variant of this command to clear the timers for a specific BGP or BGP4+ neighbor.

**Syntax**

```
neighbor <neighborid> timers {<keepalive> <holdtime>|connect
<connect>}
```

```
no neighbor <neighborid> timers [connect]
```

| Parameter | Description | |
|---|---|---|
| *<neighborid>* | {*<ip-address>*\|*<ipv6-addr>*\|*<peer-group>*} | |
| | *<ip-address>* | Specify the address of an IPv4 BGP neighbor, in dotted decimal notation A.B.C.D. |
| | *<ipv6-addr>* | Specify the address of an IPv6 BGP4+ neighbor, entered in hexadecimal in the format X:X::X:X. |
| | *<peer-group>* | Enter the name of an existing peer-group. For information on how to create peer groups, refer to the neighbor peer-group (add a neighbor) command, and neighbor route-map command. When this parameter is used with this command, the command applies on all peers in the specified group. |
| *<keepalive>* | *<0-65535>* Frequency (in seconds) at which a router sends keepalive messages to its neighbor. | |
| *<holdtime>* | *<0-65535>* Interval (in seconds) after which, on not receiving a keepalive message, the router declares a neighbor dead. | |
| *<connect>* | connect *<1-65535>* Specifies the connect timer in seconds. The default connect timer value is 120 seconds as per RFC 4271. Modify this value as needed for interoperability. | |

**Default** The keepalive timer default is 60 seconds, the holdtime timer default is 90 seconds, and the connect timer default is 120 seconds as per RFC 4271. Holdtime is keepalive * 3.

**Mode [BGP]** Router Configuration or IPv4 Address Family Configuration

**Mode [BGP4+]** Router Configuration

**Usage** Keepalive messages are sent by a router to inform another router that the BGP connection between the two is still active. The keepalive interval is the period of time between each keepalive message sent by the router. The holdtime interval is the time the router waits to receive a keepalive message and if it does not receive

a message for this period it declares the neighbor dead. The holdtime value must be 3 times the value of the keepalive value.

**Examples [BGP]**

```
awplus# configure terminal
awplus(config)# router bgp 10
awplus(config-router)# neighbor 10.10.10.1 timers 60 120
awplus# configure terminal
awplus(config)# router bgp 10
awplus(config-router)# no neighbor 10.10.10.1 timers
awplus# configure terminal
awplus(config)# router bgp 10
awplus(config-router)# neighbor group1 peer-group
awplus(config-router)# neighbor 10.10.10.1 remote-as 10
awplus(config-router)# neighbor 10.10.10.1 peer-group group1
awplus(config-router)# neighbor group1 timers 60 120
awplus# configure terminal
awplus(config)# router bgp 10
awplus(config-router)# no neighbor group1 timers
```

**Examples [BGP4+]**

```
awplus# configure terminal
awplus(config)# router bgp 10
awplus(config-router)# neighbor 2001:0db8:010d::1 timers 60 120
awplus# configure terminal
awplus(config)# router bgp 10
awplus(config-router)# no neighbor 2001:0db8:010d::1 timers
awplus# configure terminal
awplus(config)# router bgp 10
awplus(config-router)# neighbor group1 peer-group
awplus(config-router)# neighbor 2001:0db8:010d::1 remote-as 10
awplus(config-router)# address-family ipv6
awplus(config-router-af)# neighbor 2001:0db8:010d::1
peer-group group1
awplus(config-router-af)# exit
awplus(config-router)# neighbor group1 timers 60 120
awplus# configure terminal
awplus(config)# router bgp 10
awplus(config-router)# no neighbor group1 timers
```

**Related commands**

neighbor peer-group (add a neighbor)

neighbor route-map

show ip bgp neighbors hold-time (BGP only)

show ip bgp neighbors keepalive-interval (BGP only)

timers (BGP)

**Command changes**

Added to AlliedWare Plus prior to 5.4.6-1

Version 5.4.7-2.1: BGP support added for IEx510, x550 series

Version 5.4.7-2.4: BGP support added for IE300 series

# neighbor transparent-as

**Overview** Use this command to specify not to append your AS path number even if the BGP or BGP4+ peer is an eBGP peer.

Note this command has the same effect as invoking neighbor attribute-unchanged and specifying the optional **as-path** parameter.

**Syntax** `neighbor <neighborid> transparent-as`

| Parameter | Description | |
|---|---|---|
| *<neighborid>* | {*<ip-address>* \| *<ipv6-addr>* \| *<peer-group>*} | |
| | *<ip-address>* | Specify the address of an IPv4 BGP neighbor, in dotted decimal notation A.B.C.D. |
| | *<ipv6-addr>* | Specify the address of an IPv6 BGP4+ neighbor, entered in hexadecimal in the format X:X::X:X. |
| | *<peer-group>* | Enter the name of an existing peer-group. For information on how to create peer groups, refer to the neighbor peer-group (add a neighbor) command, and neighbor route-map command. When this parameter is used with this command, the command applies on all peers in the specified group. |

**Mode** Router Configuration

**Examples [BGP]**

```
awplus# configure terminal
awplus(config)# router bgp 10
awplus(config-router)# neighbor 10.10.10.1 transparent-as
awplus# configure terminal
awplus(config)# router bgp 10
awplus(config-router)# neighbor group1 peer-group
awplus(config-router)# neighbor 10.10.10.1 remote-as 10
awplus(config-router)# neighbor 10.10.10.1 peer-group group1
awplus(config-router)# neighbor group1 transparent-as
```

**Examples [BGP4+]**

```
awplus# configure terminal
awplus(config)# router bgp 10
awplus(config-router)# neighbor 2001:0db8:010d::1
transparent-as
```

```
awplus# configure terminal
awplus(config)# router bgp 10
awplus(config-router)# neighbor group1 peer-group
awplus(config-router)# neighbor 2001:0db8:010d::1 remote-as 10
awplus(config-router)# address-family ipv6
awplus(config-router-af)# neighbor 2001:0db8:010d::1
peer-group group1
awplus(config-router-af)# exit
awplus(config-router)# neighbor group1 transparent-as
```

**Related commands**

neighbor attribute-unchanged

neighbor peer-group (add a neighbor)

neighbor route-map

neighbor transparent-nexthop

**Command changes**

Added to AlliedWare Plus prior to 5.4.6-1

Version 5.4.7-2.1: BGP support added for IEx510, x550 series

Version 5.4.7-2.4: BGP support added for IE300 series

# neighbor transparent-nexthop

**Overview** Use this command to keep the next hop value of the route even if the BGP or BGP4+ peer is an eBGP peer.

Note this command has the same effect as invoking neighbor attribute-unchanged and specifying the optional **next-hop** parameter.

**Syntax** `neighbor <neighborid> transparent-nexthop`

| Parameter | Description | |
|---|---|---|
| *<neighborid>* | {*<ip-address>*\|*<ipv6-addr>*\|*<peer-group>*} | |
| | *<ip-address>* | Specify the address of an IPv4 BGP neighbor, in dotted decimal notation A.B.C.D. |
| | *<ipv6-addr>* | Specify the address of an IPv6 BGP4+ neighbor, entered in hexadecimal in the format X:X::X:X. |
| | *<peer-group>* | Enter the name of an existing peer-group. For information on how to create peer groups, refer to the neighbor peer-group (add a neighbor) command, and neighbor route-map command. When this parameter is used with this command, the command applies on all peers in the specified group. |

**Mode** Router Configuration

**Examples [BGP]**

```
awplus# configure terminal
awplus(config)# router bgp 10
awplus(config-router)# neighbor 10.10.10.1 transparent-nexthop
awplus# configure terminal
awplus(config)# router bgp 10
awplus(config-router)# neighbor group1 peer-group
awplus(config-router)# neighbor 10.10.10.1 remote-as 10
awplus(config-router)# neighbor 10.10.10.1 peer-group group1
awplus(config-router)# neighbor group1 transparent-nexthop
```

**Examples [BGP4+]**

```
awplus# configure terminal
awplus(config)# router bgp 10
awplus(config-router)# neighbor 2001:0db8:010d::1
transparent-nexthop
```

```
awplus# configure terminal
awplus(config)# router bgp 10
awplus(config-router)# neighbor group1 peer-group
awplus(config-router)# neighbor 2001:0db8:010d::1 remote-as 10
awplus(config-router)# address-family ipv6
awplus(config-router-af)# neighbor 2001:0db8:010d::1
peer-group group1
awplus(config-router-af)# exit
awplus(config-router)# neighbor group1 transparent-nexthop
```

**Related commands**

neighbor attribute-unchanged

neighbor peer-group (add a neighbor)

neighbor route-map

neighbor transparent-as

**Command changes**

Added to AlliedWare Plus prior to 5.4.6-1

Version 5.4.7-2.1: BGP support added for IEx510, x550 series

Version 5.4.7-2.4: BGP support added for IE300 series

# neighbor unsuppress-map

**Overview** Use this command to selectively leak more specific routes to a particular BGP or BGP4+ neighbor.

Use the **no** variant of this command to remove selectively leaked specific routes to a particular BGP or BGP4+ neighbor.

**Syntax**

```
neighbor <neighborid> unsuppress-map <route-map-name>
no neighbor <neighborid> unsuppress-map <route-map-name>
```

| Parameter | Description | |
|---|---|---|
| *<neighborid>* | {*<ip-address>* \| *<ipv6-addr>* \| *<peer-group>*} | |
| | *<ip-address>* | Specify the address of an IPv4 BGP neighbor, in dotted decimal notation A.B.C.D. |
| | *<ipv6-addr>* | Specify the address of an IPv6 BGP4+ neighbor, entered in hexadecimal in the format X:X::X:X. |
| | *<peer-group>* | Enter the name of an existing peer-group. For information on how to create peer groups, refer to the neighbor peer-group (add a neighbor) command, and neighbor route-map command. When this parameter is used with this command, the command applies on all peers in the specified group. |
| *<route-map-name>* | The name of the route-map used to select routes to be unsuppressed. | |

**Mode [BGP]** Router Configuration or IPv4 Address Family Configuration

**Mode [BGP4+]** IPv6 Address Family Configuration

**Usage** When the aggregate-address command is used with the **summary-only** option, the more-specific routes of the aggregate are suppressed to all neighbors. Use this command instead to selectively leak more-specific routes to a particular neighbor.

**Examples [BGP]**

```
awplus# configure terminal
awplus(config)# router bgp 10
awplus(config-router)# neighbor 10.10.0.73 unsuppress-map mymap
awplus# configure terminal
awplus(config)# router bgp 10
awplus(config-router)# address-family ipv4 unicast
awplus(config-router-af)# neighbor 10.10.0.70 unsuppress-map
mymap
awplus# configure terminal
awplus(config)# router bgp 10
awplus(config-router)# no neighbor 10.10.0.73 unsuppress-map
mymap
awplus# configure terminal
awplus(config)# router bgp 10
awplus(config-router)# address-family ipv4 unicast
awplus(config-router-af)# no neighbor 10.10.0.70 unsuppress-map
mymap
awplus# configure terminal
awplus(config)# router bgp 10
awplus(config-router)# neighbor group1 peer-group
awplus(config-router)# neighbor 10.10.10.1 remote-as 10
awplus(config-router)# neighbor 10.10.10.1 peer-group group1
awplus(config-router)# neighbor group1 unsuppress-map mymap
awplus# configure terminal
awplus(config)# router bgp 10
awplus(config-router)# no neighbor group1 unsuppress-map mymap
```

**Examples [BGP4+]**

```
awplus# configure terminal
awplus(config)# router bgp 10
awplus(config-router)# address-family ipv6 unicast
awplus(config-router-af)# neighbor 2001:0db8:010d::1
unsuppress-map mymap
awplus# configure terminal
awplus(config)# router bgp 10
awplus(config-router)# address-family ipv6 unicast
awplus(config-router-af)# no neighbor 2001:0db8:010d::1
unsuppress-map mymap
awplus# configure terminal
awplus(config)# router bgp 10
awplus(config-router)# neighbor group1 peer-group
awplus(config-router)# neighbor 2001:0db8:010d::1 remote-as 10
awplus(config-router)# address-family ipv6
awplus(config-router-af)# neighbor 2001:0db8:010d::1
peer-group group1
awplus(config-router-af)# neighbor group1 unsuppress-map mymap
awplus# configure terminal
awplus(config)# router bgp 10
awplus(config-router)# address-family ipv6
awplus(config-router-af)# no neighbor group1 unsuppress-map
mymap
```

**Related commands**

aggregate-address

neighbor peer-group (add a neighbor)

neighbor route-map

**Command changes**

Added to AlliedWare Plus prior to 5.4.6-1

Version 5.4.7-2.1: BGP support added for IEx510, x550 series

Version 5.4.7-2.4: BGP support added for IE300 series

# neighbor update-source

**Overview** Use this command to specify the source IPv4 or IPv6 address of BGP or BGP4+ packets, which are sent to the neighbor for routing updates, as the IPv4 or IPv6 address configured on the specified interface. The specified interface is usually the local loopback (lo) interface to allow internal BGP or BGP4+ connections to stay up regardless of which interface is used to reach a neighbor.

Use the **no** variant of this command to remove the IPv4 or IPv6 address from the interface as the source IPv4 or IPv6 address of BGP or BGP4+ packets sent to the neighbor, and restores the interface assignment to the closest interface, which is also called the best local address.

**Syntax**

```
neighbor <neighborid> update-source <interface>
no neighbor <neighborid> update-source
```

| Parameter | Description | |
|---|---|---|
| *<neighborid>* | {*<ip-address>* \| *<ipv6-addr>* \| *<peer-group>*} | |
| | *<ip-address>* | Specify the address of an IPv4 BGP neighbor, in dotted decimal notation A.B.C.D. |
| | *<ipv6-addr>* | Specify the address of an IPv6 BGP4+ neighbor, entered in hexadecimal in the format X:X::X:X. |
| | *<peer-group>* | Enter the name of an existing peer-group. For information on how to create peer groups, refer to the neighbor peer-group (add a neighbor) command, and neighbor route-map command. When this parameter is used with this command, the command applies on all peers in the specified group. |
| *<interface>* | Specifies the local loopback interface (lo). | |

**Default** Use of this command sets a default value of 2 for the maximum hop count.

**Mode [BGP]** Router Configuration or IPv4 Address Family Configuration

**Mode [BGP4+]** Router Configuration

**Usage** Use this command in conjunction with any specified interface on the router. The local loopback interface is the interface that is most commonly used with this command. The use of local loopback interface eliminates a dependency and BGP or BGP4+ does not have to rely on the availability of a particular interface for making BGP or BGP4+ peer relationships.

**Examples [BGP]**

To source BGP connections for neighbor 10.10.0.72 with the IP address of the local loopback address instead of the best local address, enter the commands listed below:

```
awplus(config)# interface lo
awplus(config-if)# ip address 10.10.0.73/24
awplus(config-if)# exit
awplus(config)# router bgp 100
awplus(config-router)# network 10.10.0.0
awplus(config-router)# neighbor 10.10.0.72 remote-as 110
awplus(config-router)# neighbor 10.10.0.72 update-source lo
```

To remove BGP connections for neighbor 10.10.0.72 with the IP address of the local loopback address instead of the best local address, enter the commands listed below:

```
awplus(config)# router bgp 100
awplus(config-router)# no neighbor 10.10.0.72 update-source
```

To source BGP connections for neighbor group1 with the IP address of the local loopback address instead of the best local address, enter the commands listed below:

```
awplus(config)# interface lo
awplus(config-if)# ip address 10.10.0.73/24
awplus(config-if)# exit
awplus(config)# router bgp 100
awplus(config-router)# network 10.10.0.0
awplus(config-router)# neighbor group1 peer-group
awplus(config-router)# neighbor 10.10.0.72 remote-as 100
awplus(config-router)# neighbor 10.10.0.72 peer-group group1
awplus(config-router)# neighbor group1 update-source lo
```

To remove BGP connections for neighbor group1 with the IP address of the local loopback address instead of the best local address, enter the commands listed below:

```
awplus(config)# router bgp 100
awplus(config-router)# neighbor group1 update-source lo
```

**Examples [BGP4+]**

To source BGP connections for neighbor 2001:0db8:010d::1 with the IPv6 address of the local loopback address instead of the best local address, enter the commands listed below:

```
awplus(config)# interface lo
awplus(config-if)# ipv6 address 2001:0db8:010d::1/128
awplus(config-if)# exit
awplus(config)# router bgp 100
awplus(config-router)# neighbor 2001:0db8:010d::1 remote-as 110
awplus(config-router)# neighbor 2001:0db8:010d::1
update-source lo
```

To remove BGP connections for neighbor 2001:0db8:010d::1 with the IPv6 address of the local loopback address instead of the best local address, enter the commands listed below:

```
awplus(config)# router bgp 100
awplus(config-router)# no neighbor 2001:0db8:010d::1
update-source
```

To source BGP connections for neighbor group1 with the IPv6 address of the local loopback address instead of the best local address, enter the commands listed below:

```
awplus(config)# interface lo
awplus(config-if)# ipv6 address 2001:0db8:010d::1/128
awplus(config-if)# exit
awplus(config)# router bgp 100
awplus(config-router)# neighbor group1 peer-group
awplus(config-router)# neighbor 2001:0db8:010d::1 remote-as 100
awplus(config-router)# address-family ipv6
awplus(config-router-
af)# neighbor 2001:0db8:010d::1 peer-group group1
awplus(config-router-
af)# exit
awplus(config-router)# neighbor group1 update-source lo
```

To remove BGP connections for neighbor group1 with the IPv6 address of the local loopback address instead of the best local address, enter the commands listed below:

```
awplus(config)# router bgp 100
awplus(config-router)# neighbor group1 update-source lo
```

**Related commands**

neighbor peer-group (add a neighbor)

neighbor route-map

**Command changes**

Added to AlliedWare Plus prior to 5.4.6-1

Version 5.4.7-2.1: BGP support added for IEx510, x550 series

Version 5.4.7-2.4: BGP support added for IE300 series

# neighbor version (BGP only)

**Overview** Use this command to configure the device to accept only a particular BGP version.

Use the **no** variant of this command to use the default BGP version (version 4).

**Syntax**

```
neighbor <neighborid> version <version>
no neighbor <neighborid> version
```

| Parameter | Description | |
|---|---|---|
| *<neighborid>* | {*<ip-address>*\|*<peer-group>*} | |
| | *<ip-address>* | The address of an IPv4 BGP neighbor, in dotted decimal notation A.B.C.D. |
| | *<peer-group>* | Enter the name of an existing peer-group. For information on how to create peer groups, refer to the neighbor peer-group (add a neighbor) command, and neighbor route-map command. When this parameter is used with this command, the command applies on all peers in the specified group. |
| *<version>* | {4} Specifies the BGP version number. | |

**Mode** Router Configuration or IPv4 Address Family Configuration

**Usage notes** By default, the system uses BGP version 4 and on request dynamically negotiates down to version 2. Using this command disables the router's version-negotiation capability and forces the router to use only a specified version with the neighbor.

**Examples**

```
awplus# configure terminal
awplus(config)# router bgp 10
awplus(config-router)# neighbor 10.10.10.1 version 4
awplus# configure terminal
awplus(config)# router bgp 10
awplus(config-router)# neighbor group1 peer-group
awplus(config-router)# neighbor 10.10.10.1 remote-as 10
awplus(config-router)# neighbor 10.10.10.1 peer-group group1
awplus(config-router)# neighbor group1 version 4
awplus# configure terminal
awplus(config)# router bgp 10
awplus(config-router)# no neighbor 10.10.10.1 version
awplus# configure terminal
awplus(config)# router bgp 10
awplus(config-router)# no neighbor group1 version
```

**Related commands**

neighbor peer-group (add a neighbor)

neighbor route-map

**Command changes**

Added to AlliedWare Plus prior to 5.4.6-1

Version 5.4.7-2.1: BGP support added for IEx510, x550 series

Version 5.4.7-2.4: BGP support added for IE300 series

# neighbor weight

**Overview** Use this command to set default weights for routes from this BGP or BGP4+ neighbor.

Use the **no** variant of this command to remove a weight assignment.

**Syntax**

```
neighbor <neighborid> weight <weight>
no neighbor <neighborid> weight [<weight>]
```

| Parameter | Description | |
|---|---|---|
| *<neighborid>* | *{<ip-address>\|<ipv6-addr>\|<peer-group>}* | |
| | *<ip-address>* | Specify the address of an IPv4 BGP neighbor, in dotted decimal notation A.B.C.D. |
| | *<ipv6-addr>* | Specify the address of an IPv6 BGP4+ neighbor, entered in hexadecimal in the format X:X::X:X. |
| | *<peer- group>* | Enter the name of an existing peer-group. For information on how to create peer groups, refer to the neighbor peer-group (add a neighbor) command, and neighbor route-map command. When this parameter is used with this command, the command applies on all peers in the specified group. |
| *<weight>* | *<0-65535>* Specifies the weight this command assigns to the route. | |

**Mode [BGP]** Router Configuration or IPv4 Address Family Configuration

**Mode [BGP4+]** IPv6 Address Family Configuration

**Usage notes** Use this command to specify a weight value to all routes learned from a BGP or BGP4+ neighbor. The route with the highest weight gets preference when there are other routes on the network.

Unlike the local-preference attribute, the weight attribute is relevant only to the local router.

The weights assigned using the **set weight** command overrides the weights assigned using this command.

**Examples [BGP]**

```
awplus# configure terminal
awplus(config)# router bgp 10
awplus(config-router)# neighbor 10.10.10.1 weight 60
awplus# configure terminal
awplus(config)# router bgp 10
awplus(config-router)# no neighbor 10.10.10.1 weight
awplus# configure terminal
awplus(config)# router bgp 10
awplus(config-router)# address-family ipv4
awplus(config-router-af)# neighbor 10.10.10.1 weight 60
awplus# configure terminal
awplus(config)# router bgp 10
awplus(config-router)# address-family ipv4
awplus(config-router-af)# no neighbor 10.10.10.1 weight
awplus# configure terminal
awplus(config)# router bgp 10
awplus(config-router)# neighbor group1 peer-group
awplus(config-router)# neighbor 10.10.10.1 remote-as 10
awplus(config-router)# neighbor 10.10.10.1 peer-group group1
awplus(config-router)# neighbor group1 weight 60
awplus# configure terminal
awplus(config)# router bgp 10
awplus(config-router)# no neighbor group1 weight
```

**Examples [BGP4+]**

```
awplus# configure terminal
awplus(config)# router bgp 10
awplus(config-router)# address-family ipv6
awplus(config-router-af)# neighbor 2001:0db8:010d::1 weight 60
awplus# configure terminal
awplus(config)# router bgp 10
awplus(config-router)# address-family ipv6
awplus(config-router-af)# no neighbor 2001:0db8:010d::1 weight
awplus# configure terminal
awplus(config)# router bgp 10
awplus(config-router)# neighbor group1 peer-group
awplus(config-router)# neighbor 2001:0db8:010d::1 remote-as 10
awplus(config-router)# address-family ipv6
awplus(config-router-af)# neighbor 2001:0db8:010d::1
peer-group group1
awplus(config-router-af)# neighbor group1 weight 60
awplus# configure terminal
awplus(config)# router bgp 10
awplus(config-router)# address-family ipv6
awplus(config-router-af)# no neighbor group1 weight
```

**Related commands**

neighbor peer-group (add a neighbor)

neighbor route-map

**Command changes**

Added to AlliedWare Plus prior to 5.4.6-1

Version 5.4.7-2.1: BGP support added for IEx510, x550 series

Version 5.4.7-2.4: BGP support added for IE300 series

# network (BGP and BGP4+)

**Overview** Use this command to specify particular routes to be advertised into the BGP or BGP4+ routing process. A unicast network address without a mask is accepted if it falls into the natural boundary of its class. A class-boundary mask is derived if the address matches its natural class-boundary.

Note that you can specify a prefix length for the prefix being added, and you can also specify a classful network without a prefix length and an appropriate prefix length is added. Note that specifying a non-classful prefix without a prefix length results in a /32 prefix length on an IPv4 route.

Use the **no** variant of this command to remove a network route entry.

**Syntax [BGP]**

```
network {<ip-prefix/length>|<ip-network-addr>} [mask
<network-mask>] [route-map <route-map-name>] [backdoor]
```

```
no network {<ip-prefix/length>|<ip-network-addr>} [mask
<network-mask>] [route-map <route-map-name>] [backdoor]
```

**Syntax [BGP4+]**

```
network {<ipv6-prefix/length>|<ipv6-network-addr>} [route-map
<route-map-name>]
```

```
no network {<ipv6-prefix/length>|<ipv6-network-addr>}
[route-map <route-map-name>]
```

| Parameter | Description |
|---|---|
| *<ip-prefix/length>* | IP network prefix and prefix length entered in dotted decimal format for the IP network prefix, then slash notation for the prefix length in the format A.B.C.D/M, e.g. 192.168.1.224/27 |
| *<ip-network-addr>* | IP network prefix entered in dotted decimal format A.B.C.D, e.g. 192.168.1.224 |
| *<network-mask>* | Specify a network mask in the format A.B.C.D, e.g. 255.255.255.224. |
| *<ipv6-prefix/length>* | IPv6 network prefix and prefix length entered in dotted decimal format for the IPv6 network prefix, then slash notation for the IPv6 prefix length in the format X:X::X:X/M, e.g. 2001:db8::/64 |
| *<ipv6-network-addr>* | IP network prefix entered in dotted decimal format A.B.C.D, e.g. 192.168.1.224 |
| *<route-map-name>* | Specify the name of the route map. |
| backdoor | Specify a BGP backdoor route that is not advertised. |

**Mode [BGP]** Router Configuration and IPv4 Address Family `[ipv4 unicast]` mode

**Mode [BGP4+]** IPv6 Address Family Configuration

**Usage notes**

It does not matter how the route is arranged in the IP or IPv6 routing table. The route can arrive in the IP routing table by a static route, or the route can be learned from OSPF or OSPFv3 or RIP or RIPng routing.

If you configure a route-map, then that route-map will be used in filtering the network, or the route-map will be used to modify the attributes that are advertised with the route.

**Example [BGP]**

The following example illustrates a Class-A address configured as a network route. The natural Class-A network prefix mask length of 8 will be internally derived, that is, 2.0.0.0/8.

```
awplus(config)# router bgp 100
awplus(config-router)# network 2.0.0.0
```

**Output [BGP]**

Figure 31-1: Example output from the **show running-config** command after entering **network 2.0.0.0**

```
awplus#show running-config

router bgp 100
 network 2.0.0.0/8
```

**Example [BGP]**

The following example illustrates a network address which does not fall into its natural class boundary, and hence, is perceived as a host route, that is, 192.0.2.224/27.

```
awplus(config)# router bgp 100
awplus(config-router)# network 192.0.2.224 mask 255.255.255.224
```

**Output [BGP]**

Figure 31-2: Example output from the **show running-config** command after entering **network 192.0.2.224 mask 255.255.255.224**

```
awplus#show running-config

router bgp 100
 network 192.0.2.224/27
```

**Example [BGP]**

The following example is the same as the previous example for host route 192.0.2.224/27, but is entered in prefix/length format using slash notation (instead of prefix plus mask in dotted decimal format using the **mask** keyword before the network mask in dotted decimal format):

```
awplus(config)# router bgp 100
awplus(config-router)# network 192.0.2.224/27
```

**Example [BGP4+]**

The following example is the same as the previous example for host route 2001:db8::/32:

```
awplus(config)# router bgp 100
awplus(config-router)# address-family ipv6
awplus(config-router-af)# network 2001:db8::/32
```

**Output [BGP4+]**

Figure 31-3: Example output from the **show running-config** command after entering **network 2001:db8::/32**

```
awplus#show running-config

router bgp 100
 network 2001:db8::/32
```

**Command changes**

Added to AlliedWare Plus prior to 5.4.6-1

Version 5.4.7-2.1: BGP support added for IEx510, x550 series

Version 5.4.7-2.4: BGP support added for IE300 series

# network synchronization

**Overview**

Use this command to ensure the exact same static network prefix, specified through any of the **network** commands, is local or has IGP reachability before introduction to BGP or BGP4+.

Use the **no** variant of this command to disable this function.

**Syntax**

```
network synchronization
no network synchronization
```

**Default**

Network synchronization is disabled by default.

**Mode [BGP]**

Router Configuration and IPv4 Address Family [ipv4 unicast] Configuration

**Mode [BGP4+]**

IPv6 Address Family [ipv6 unicast] Configuration

**Examples [BGP]**

The following example enables IGP synchronization of BGP static network routes in the Router Configuration mode.

```
awplus# configure terminal
awplus(config)# router bgp 11
awplus(config-router)# network synchronization
```

The following example enables IGP synchronization of BGP static network routes in the IPv4-Unicast address family.

```
awplus# configure terminal
awplus(config)# router bgp 11
awplus(config-router)# address-family ipv4 unicast
awplus(config-router-af)# network synchronization
```

**Example [BGP4+]**

The following example enables IGP synchronization of BGP4+ static network routes in the IPv6-Unicast address family.

```
awplus# configure terminal
awplus(config)# router bgp 11
awplus(config-router)# address-family ipv6 unicast
awplus(config-router-af)# network synchronization
```

**Command changes**

Added to AlliedWare Plus prior to 5.4.6-1

Version 5.4.7-2.1: BGP support added for IEx510, x550 series

Version 5.4.7-2.4: BGP support added for IE300 series

# redistribute (into BGP or BGP4+)

**Overview**

Use this command to inject routes from one routing process into a BGP or BGP4+ routing table.

Use the **no** variant of this command to disable this function.

**Syntax**

`redistribute {ospf|rip|connected|static} [route-map <route-map-entry-pointer>]`

`no redistribute {ospf|rip|connected|static} [route-map <route-map-entry-pointer>]`

| Parameter | Description |
|---|---|
| `connected` | Specifies the redistribution of connected routes for both BGP and BGP4+. |
| `ospf` | Specifies the redistribution of OSPF information for BGP or OSPFv3 information for BGP4+. |
| `rip` | Specifies the redistribution of RIP information for BGP or RIPng information for BGP4+. |
| `static` | Specifies the redistribution of Static routes for both BGP and BGP4+. |
| `route-map` | Route map reference for both BGP and BGP4+. |
| `<route-map-entry-pointer>` | Pointer to route-map entries. |

**Mode [BGP]**

Router Configuration or IPv4 Address Family Configuration

**Mode [BGP4+]**

Router Configuration or IPv6 Address Family Configuration

**Usage notes**

Redistribution is used by routing protocols to advertise routes that are learned by some other means, such as by another routing protocol or by static routes. Since all internal routes are dumped into BGP, careful filtering is applied to make sure that only routes to be advertised reach the internet, not everything. This command allows redistribution by injecting prefixes from one routing protocol into another routing protocol.

**Examples [BGP/BGP+]**

The following example shows the configuration of a route-map named `rmap1`, which is then applied using the **redistribute route-map** command.

```
awplus# configure terminal
awplus(config)# route-map rmap1 permit 1
awplus(config-route-map)# match origin incomplete
awplus(config-route-map)# set metric 100
awplus(config-route-map)# exit
awplus(config)# router bgp 12
awplus(config-router)# redistribute ospf route-map rmap1
```

To apply the above example to a specific VRF instance named `blue`, use the following commands:

```
awplus(config)# router bgp 12
awplus(config-router)# address-family ipv4 vrf blue
awplus(config-router-af)# redistribute ospf route-map rmap1
```

The following example shows the configuration of a route-map named `rmap2`, which is then applied using the **redistribute route-map** command.

```
awplus# configure terminal
awplus(config)# route-map rmap2 permit 3
awplus(config-route-map)# match interface vlan1
awplus(config-route-map)# set metric-type 1
awplus(config-route-map)# exit
awplus(config)# router ospf 100
awplus(config-router)# redistribute bgp route-map rmap2
```

Note that configuring a route-map and applying it with the redistribute route-map command allows you to filter which router are distributed from another routing protocol (such as OSPF with BGP). A route-map can also set the metric, tag, and metric-type of the redistributed routes.

**Command changes**

Added to AlliedWare Plus prior to 5.4.6-1

Version 5.4.6-2.1: VRF-lite support added to BGP for AR-series products

Version 5.4.7-2.1: BGP support added for IEx510, x550 series

Version 5.4.7-2.4: BGP support added for IE300 series

# restart bgp graceful (BGP only)

**Overview** Use this command to force the device to perform a graceful BGP restart.

**Syntax**

```
restart bgp graceful
```

**Mode** Privileged Exec

**Usage** Before using this command, BGP graceful-restart capabilities must be enabled within the router BGP (bgp graceful-restart command), and each neighbor configured on the device should be set to advertise its graceful-restart capability (bgp graceful-restart graceful-reset command). The neighbor devices also need to have BGP graceful-restart capabilities enabled (bgp graceful-restart command).

This command stops the whole BGP process and makes the device retain the BGP routes and mark them as stale. Receiving BGP speakers, retain and mark as stale all BGP routes received from the restarting speaker for all the address families received in the Graceful Restart Capability exchange.

When a **restart bgp graceful** command is issued, the BGP configuration is reloaded from the last saved configuration. Ensure you first issue a **copy running-config startup-config**.

**Example**

```
awplus# restart bgp graceful
```

**Related commands**

bgp graceful-restart

bgp graceful-restart graceful-reset

**Command changes**

Added to AlliedWare Plus prior to 5.4.6-1

Version 5.4.7-2.1: BGP support added for IEx510, x550 series

Version 5.4.7-2.4: BGP support added for IE300 series

# router bgp

**Overview** Use this command to configure a BGP routing process, specifying the 32-bit Autonomous System (AS) number.

Use the **no** variant of this command to disable a BGP routing process, specifying the 32-bit AS number.

**Syntax**

```
router bgp <asn>
no router bgp <asn>
```

| Parameter | Description |
|---|---|
| *<asn>* | *<1-4294967295>* Specifies the 32-bit Autonomous System (AS) number. |

**Mode** Global Configuration

**Usage** The **router bgp** command enables a BGP routing process:

```
router bgp 1
    neighbor 10.0.0.1 remote-as 1
    neighbor 10.0.0.2 remote-as 1
     !
  router bgp 2
    neighbor 10.0.0.3 remote-as 2
    neighbor 10.0.0.4 remote-as 2
```

**Examples**

```
awplus# configure terminal
awplus(config)# router bgp 12
awplus(config-router)#
awplus# configure terminal
awplus(config)# no router bgp 12
awplus(config)#
```

**Command changes** Added to AlliedWare Plus prior to 5.4.6-1

Version 5.4.7-2.1: BGP support added for IEx510, x550 series

Version 5.4.7-2.4: BGP support added for IE300 series

# route-map

**Overview** Use this command to configure a route map entry, and to specify whether the device will process or discard matching routes and BGP update messages.

The device uses a name to identify the route map, and a sequence number to identify each entry in the route map.

The **route-map** command puts you into route-map configuration mode. In this mode, you can use the following:

- one or more of the **match** commands to create match clauses. These specify what routes or update messages match the entry.
- one or more of the **set** commands to create set clauses. These change the attributes of matching routes or update messages.

Use the **no** variant of this command to delete a route map or to delete an entry from a route map.

**Syntax**

```
route-map <mapname> {deny|permit} <seq>
no route-map <mapname>
no route-map <mapname> {deny|permit} <seq>
```

| Parameter | Description |
|---|---|
| *<mapname>* | A name to identify the route map. |
| `deny` | The route map causes a routing process to discard matching routes or BGP update messages. |
| `permit` | The route map causes a routing process to use matching routes or BGP update messages. |
| *<seq>* | <1-65535> The sequence number of the entry. You can use this parameter to control the order of entries in this route map. |

**Mode** Global Configuration

**Usage notes** Route maps allow you to control and modify routing information by filtering routes and setting route attributes. You can apply route maps when the device:

- processes BGP update messages that it has received from a peer
- prepares BGP update messages to send to peers
- redistributes routes from one routing protocol into another
- redistributes static routes into routing protocols
- uses BGP route flap dampening

When a routing protocol passes a route or update message through a route map, it checks the entries in order of their sequence numbers, starting with the lowest numbered entry.

If it finds a match on a route map with an action of permit, then it applies any set clauses and accepts the route. Having found a match, the route is not compared against any further entries of the route map.

If it finds a match on a route map with an action of deny, it will discard the matching route.

If it does not find a match, it discards the route or update message. This means that route maps end with an implicit deny entry. To permit all non-matching routes or update messages, end your route map with an entry that has an action of **permit** and no match clause.

## Examples

To enter route-map mode for entry 1 of the route map called "route1", and then add a match and set clause to it, use the commands:

```
awplus# configure terminal
awplus(config)# route-map route1 permit 1
awplus(config-route-map)# match as-path 60
awplus(config-route-map)# set weight 70
```

To enter route-map mode for entry 2 of the route map called "route1", and then add a match and set clause to it, use the commands:

```
awplus# configure terminal
awplus(config)# route-map route1 permit 2
awplus(config-route-map)# match interface vlan2
awplus(config-route-map)# set metric 20
```

Note how the prompt changes when you go into route map configuration mode.

To make the device process non-matching routes instead of discarding them, add a command like the following one:

```
awplus(config)# route-map route1 permit 100
```

## Related commands

For BGP:

show route-map

bgp dampening

neighbor default-originate

neighbor route-map

neighbor unsuppress-map

network (BGP and BGP4+)

redistribute (into BGP or BGP4+)

show ip bgp route-map (BGP only)

For OSPF:

default-information originate

redistribute (OSPF)

For RIP:

redistribute (RIP)

# set as-path

**Overview**

Use this command to add an AS path set clause to a route map entry.

When a BGP update message matches the route map entry, the device prepends the specified Autonomous System Number (ASN) or ASNs to the update's AS path attribute.

The AS path attribute is a list of the autonomous systems through which the announcement for the prefix has passed. As prefixes pass between autonomous systems, each autonomous system adds its ASN to the beginning of the list. This means that the AS path attribute can be used to make routing decisions.

Use the **no** variant of this command to remove the set clause.

**Syntax**

```
set as-path prepend <1-65535> [<1-65535>]...
no set as-path prepend [<1-65535> [<1-65535>]...]
```

| Parameter | Description |
|---|---|
| `prepend` | Prepends the autonomous system path. |
| *<1-65535>* | The number to prepend to the AS path. If you specify multiple ASNs, separate them with spaces. |

**Mode**

Route-map mode

**Usage notes**

Use the **set as-path** command to specify an autonomous system path. By specifying the length of the AS-Path, the device influences the best path selection by a neighbor. Use the `prepend` parameter with this command to prepend an AS path string to routes increasing the AS path length.

This command is valid for BGP update messages only.

**Example**

To use entry 3 of the route map called `myroute` to prepend ASN 8 and 24 to the AS path of matching update messages, use the commands:

```
awplus# configure terminal
awplus(config)# route-map myroute permit 3
awplus(config-route-map)# set as-path prepend 8 24
```

**Related commands**

match as-path

route-map

show route-map

**Command changes**

Added to AlliedWare Plus prior to 5.4.6-1

Version 5.4.7-2.1: BGP support added for IEx510, x550 series

Version 5.4.7-2.4: BGP support added for IE300 series

# set community

**Overview** Use this command to add a community set clause to a route map entry.

When a BGP update message matches the route map entry, the device takes one of the following actions:

- changes the update's community attribute to the specified value or values, or
- adds the specified community value or values to the update's community attribute, if you specify the **additive** parameter after specifying another parameter. or
- removes the community attribute from the update, if you specify the **none** parameter

Use the **no** variant of this command to remove the set clause.

**Syntax**

```
set community {[<1-65535>][AA:NN] [internet] [local-AS]
[no-advertise] [no-export] [additive]}
```

```
no set community {[AA:NN] [internet] [local-AS] [no-advertise]
[no-export] [additive]}
```

```
set community none
```

```
no set community none
```

| Parameter | Description |
|---|---|
| *<1-65535>* | The AS number of the community as an integer not in AA:NN format. |
| *AA:NN* | The Autonomous System (AS) number of the community, in AA:NN format. AS numbers are assigned to the regional registries by the IANA (www.iana.org) and can be obtained from the registry in your region.<br>AA and NN are both integers from 1 to 65535.<br>AA is the AS number; NN is a value chosen by the ASN administrator. |
| `local-AS` | The community of routes that must not be advertised to external BGP peers (this includes peers in other members' Autonomous Systems inside a BGP confederation). |
| `internet` | The community of routes that can be advertised to all BGP peers. |
| `no-advertise` | The community of routes that must not be advertised to other BGP peers. |
| `no-export` | The community of routes that must not be advertised outside a BGP confederation boundary (a standalone Autonomous System that is not part of a confederation should be considered a confederation itself). |

| Parameter | Description |
|---|---|
| none | The device removes the community attribute from matching update messages. |
| additive | The device adds the specified community value to the update message's community attribute, instead of replacing the existing attribute. By default this parameter is not included, so the device replaces the existing attribute. |

**Mode**

Route-map Configuration

**Usage notes**

This command is valid for BGP update messages only.

**Examples**

To use entry 3 of the route map called `rmap1` to put matching routes into the no-advertise community, use the commands:

```
awplus# configure terminal
awplus(config)# route-map rmap1 permit 3
awplus(config-route-map)# set community no-advertise
```

To use entry 3 of the route map called `rmap1` to put matching routes into several communities, use the commands:

```
awplus# configure terminal
awplus(config)# route-map rmap1 permit 3
awplus(config-route-map)# set community 10:01 23:34 12:14
no-export
```

To use entry 3 of the route map called `rmap1` to put matching routes into a single AS community numbered `16384`, use the commands:

```
awplus# configure terminal
awplus(config)# route-map rmap1 permit 3
awplus(config-route-map)# set community 16384 no-export
```

**Related commands**

match community

route-map

set aggregator

set comm-list delete

set extcommunity

show route-map

**Command changes**

Added to AlliedWare Plus prior to 5.4.6-1

Version 5.4.7-2.1: BGP support added for IEx510, x550 series

Version 5.4.7-2.4: BGP support added for IE300 series

# show bgp ipv6 (BGP4+ only)

**Overview**

Use this command to display BGP4+ network information for a specified IPv6 address.

For information on filtering and saving command output, see the "Getting Started with AlliedWare Plus" Feature Overview and Configuration Guide.

**Syntax**

```
show bgp ipv6 <ipv6-addr>
```

| Parameter | Description |
|---|---|
| *<ipv6-addr>* | Specifies the IPv6 address, entered in hexadecimal in the format X:X::X:X. |

**Mode**

User Exec and Privileged Exec

**Example**

```
awplus# show bgp ipv6 2001:0db8:010d::1
```

**Related commands**

show bgp ipv6 longer-prefixes (BGP4+ only)

**Command changes**

Added to AlliedWare Plus prior to 5.4.6-1

Version 5.4.7-2.1: BGP support added for IEx510, x550 series

Version 5.4.7-2.4: BGP support added for IE300 series

# show bgp ipv6 community (BGP4+ only)

**Overview** Use this command to display routes that match specified communities within an IPv6 environment. Use the show ip bgp community (BGP only) command within an IPv4 environment.

For information on filtering and saving command output, see the "Getting Started with AlliedWare Plus" Feature Overview and Configuration Guide.

You may use any combination and repetition of parameters listed in the *<type>* placeholder.

**Syntax**

```
show bgp ipv6 community [<type>] [exact-match]
```

| Parameter | | Description |
|---|---|---|
| *<type>* | {[*AA:NN*][local-AS][no-advertise][no-export]} | |
| | *AA:NN* | Specifies the Autonomous System (AS) community number, in AA:NN format. |
| | local-AS | Do not send outside local Autonomous Systems (well-known community). |
| | no-advertise | Do not advertise to any peer (well-known community). |
| | no-export | Do not export to next AS (well-known community). |
| exact-match | Specifies that the exact match of the communities is displayed. This optional parameter cannot be repeated. | |

**Mode** User Exec and Privileged Exec

**Examples** Note that the AS numbers shown are examples only.

```
awplus# show bgp ipv6 community 64497:64499 exact-match
```

```
awplus# show bgp ipv6 community 64497:64499 64500:64501
exact-match
```

```
awplus# show bgp ipv6 community 64497:64499 64500:64501
64510:64511no-advertise
```

```
awplus# show bgp ipv6 community no-advertise
no-advertiseno-advertise exact-match
```

```
awplus# show bgp ipv6 community no-export 64510:64511
no-advertise local-AS no-export
```

```
awplus# show bgp ipv6 community no-export 64510:64511
no-advertise 64497:64499 64500:64501 no-export
```

```
awplus# show bgp ipv6 community no-export 64497:64499
no-advertise local-AS no-export
```

**Related commands**

show ip bgp community (BGP only)

**Command changes**

Added to AlliedWare Plus prior to 5.4.6-1

Version 5.4.7-2.1: BGP support added for IEx510, x550 series

Version 5.4.7-2.4: BGP support added for IE300 series

# show bgp ipv6 community-list (BGP4+ only)

**Overview**

Use this command to display routes that match the given community-list within an IPv6 environment. Use the show ip bgp community-list (BGP only) command within an IPv4 environment.

For information on filtering and saving command output, see the "Getting Started with AlliedWare Plus" Feature Overview and Configuration Guide.

**Syntax**

```
show bgp ipv6 community-list <listname> [exact-match]
```

| Parameter | Description |
|---|---|
| `<listname>` | Specifies the community list name. |
| `exact-match` | Displays only routes that have exactly the same specified communities. |

**Mode**

User Exec and Privileged Exec

**Example**

```
awplus# show bgp ipv6 community-list mylist exact-match
```

**Related commands**

show ip bgp community-list (BGP only)

**Command changes**

Added to AlliedWare Plus prior to 5.4.6-1

Version 5.4.7-2.1: BGP support added for IEx510, x550 series

Version 5.4.7-2.4: BGP support added for IE300 series

# show bgp ipv6 dampening (BGP4+ only)

**Overview**

Use this command to show dampened routes from a BGP4+ instance within an IPv6 environment. Use the show ip bgp dampening (BGP only) command to show dampened routes from a BGP instance within an IPv4 environment.

For information on filtering and saving command output, see the "Getting Started with AlliedWare Plus" Feature Overview and Configuration Guide.

**Syntax**

```
show bgp ipv6 dampening
{dampened-paths|flap-statistics|parameters}
```

| Parameter | Description |
|---|---|
| `dampened-paths` | Display paths suppressed due to dampening. |
| `flap-statistics` | Display flap statistics of routes. |
| `parameters` | Display details of configured dampening parameters. |

**Mode**

User Exec and Privileged Exec

**Usage notes**

Enable BGP4+ dampening to maintain dampened-path information in memory.

**Examples**

```
awplus# show bgp ipv6 dampening dampened-path
awplus# show bgp ipv6 dampening flap-statistics
awplus# show bgp ipv6 dampening parameter
```

**Related commands**

show ip bgp dampening (BGP only)

**Command changes**

Added to AlliedWare Plus prior to 5.4.6-1

Version 5.4.7-2.1: BGP support added for IEx510, x550 series

Version 5.4.7-2.4: BGP support added for IE300 series

# show bgp ipv6 filter-list (BGP4+ only)

**Overview**

Use this command to display routes conforming to the filter-list within an IPv6 environment. Use the show ip bgp filter-list (BGP only) command to display routes conforming to the filter-list within an IPv4 environment.

For information on filtering and saving command output, see the "Getting Started with AlliedWare Plus" Feature Overview and Configuration Guide.

**Syntax**

```
show bgp ipv6 filter-list <listname>
```

| Parameter | Description |
|---|---|
| `<listname>` | Specifies the regular-expression access list name. |

**Mode**

User Exec and Privileged Exec

**Example**

```
awplus# show bgp ipv6 filter-list mylist
```

**Related commands**

show ip bgp filter-list (BGP only)

**Command changes**

Added to AlliedWare Plus prior to 5.4.6-1

Version 5.4.7-2.1: BGP support added for IEx510, x550 series

Version 5.4.7-2.4: BGP support added for IE300 series

# show bgp ipv6 inconsistent-as (BGP4+ only)

**Overview**

Use this command to display routes with inconsistent AS Paths within an IPv6 environment. Use the show ip bgp inconsistent-as (BGP only) command to display routes with inconsistent AS paths within an IPv4 environment.

For information on filtering and saving command output, see the "Getting Started with AlliedWare Plus" Feature Overview and Configuration Guide.

**Syntax**

```
show bgp ipv6 inconsistent-as
```

**Mode**

User Exec and Privileged Exec

**Example**

```
awplus# show bgp ipv6 inconsistent-as
```

**Related commands**

show ip bgp inconsistent-as (BGP only)

**Command changes**

Added to AlliedWare Plus prior to 5.4.6-1

Version 5.4.7-2.1: BGP support added for IEx510, x550 series

Version 5.4.7-2.4: BGP support added for IE300 series

# show bgp ipv6 longer-prefixes (BGP4+ only)

**Overview**

Use this command to display the route of the local BGP4+ routing table for a specific prefix with a specific mask or for any prefix having a longer mask than the one specified.

For information on filtering and saving command output, see the "Getting Started with AlliedWare Plus" Feature Overview and Configuration Guide.

**Syntax**

```
show bgp ipv6 <ipv6-addr/prefix-length> longer-prefixes
```

| Parameter | Description |
|---|---|
| *<ipv6-addr/prefix-length>* | Specifies the IPv6 address with prefix length. The IPv6 address uses the format X:X::X:X/Prefix-Length. The prefix-length is usually set between 0 and 64. |

**Mode**

User Exec and Privileged Exec

**Example**

```
awplus# show bgp ipv6 2001:0db8::/64 longer-prefixes
```

**Related commands**

show bgp ipv6 (BGP4+ only)

**Command changes**

Added to AlliedWare Plus prior to 5.4.6-1

Version 5.4.7-2.1: BGP support added for IEx510, x550 series

Version 5.4.7-2.4: BGP support added for IE300 series

# show bgp ipv6 neighbors (BGP4+ only)

**Overview** Use this command to display detailed information on peering connections to all BGP4+ neighbors within an IPv6 environment.

Use the show ip bgp neighbors (BGP only) command to display detailed information on peering connections to all BGP neighbors within an IPv4 environment.

For information on filtering and saving command output, see the "Getting Started with AlliedWare Plus" Feature Overview and Configuration Guide.

**Syntax**

```
show bgp ipv6 neighbors [<ipv6-addr> [advertised-routes|
received prefix-filter|received-routes|routes]]
```

| Parameter | Description |
|---|---|
| *<ipv6-addr>* | Specifies the IPv6 address, entered in hexadecimal in the format X:X::X:X. |
| `advertised-routes` | Displays the routes advertised to a BGP4+ neighbor. |
| `received prefix-filter` | Displays received prefix-list filters. |
| `received-routes` | Displays the received routes from the neighbor. To display all the received routes from the neighbor, configure the BGP4+ soft reconfigure first. |
| `routes` | Displays all accepted routes learned from neighbors. |

**Mode** User Exec and Privileged Exec

**Examples [BGP4+]**

```
awplus# show bgp ipv6 neighbors 2001:0db8:010d::1
advertised-routes
```

```
awplus# show bgp ipv6 neighbors 2001:0db8:010d::1 received
prefix-filter
```

```
awplus# show bgp ipv6 neighbors 2001:0db8:010d::1
received-routes
```

```
awplus# show bgp ipv6 neighbors 2001:0db8:010d::1 routes
```

**Output** Figure 31-4: Example output from **show bgp ipv6 neighbors** 2001:db8:b::1

```
awplus#show bgp ipv6 neighbors 2001:db8:b::1
BGP neighbor is 2001:db8:b::1, remote AS 200, local AS 100, external link
  BGP version 4, remote router ID 2.2.2.1
  BGP state = Established, up for 01:03:26
  Last read 01:03:26, hold time is 90, keepalive interval is 30 seconds
  Neighbor capabilities:
    Route refresh: advertised and received (old and new)
    4-Octet ASN Capability: advertised and received
    Address family IPv4 Unicast: advertised and received
    Address family IPv6 Unicast: advertised and received
  Received 157 messages, 0 notifications, 0 in queue
  Sent 228 messages, 0 notifications, 0 in queue
  Route refresh request: received 0, sent 0
  Minimum time between advertisement runs is 30 seconds
  Update source is lo
For address family: IPv4 Unicast
  BGP table version 1, neighbor version 1
  Index 2, Offset 0, Mask 0x4
  Community attribute sent to this neighbor (both)
  0 accepted prefixes
  0 announced prefixes

For address family: IPv6 Unicast
  BGP table version 66, neighbor version 66
  Index 2, Offset 0, Mask 0x4
  AF-dependant capabilities:
    Graceful restart: advertised, received

  Community attribute sent to this neighbor (both)
  Default information originate, default sent
  Inbound path policy configured
  Incoming update prefix filter list is *BGP_FILTER_LIST
  Route map for incoming advertisements is *BGP_LOCAL_PREF_MAP
  8 accepted prefixes
  8 announced prefixes

Connections established 1; dropped 0
Graceful-restart Status:
  Remote restart-time is 90 sec

  External BGP neighbor may be up to 2 hops away.
Local host: 2001:db8:a::1, Local port: 179
Foreign host: 2001:db8:b::1, Foreign port: 50672
Nexthop: 1.1.1.1
Nexthop global: 2001:db8:a::1
Nexthop local: ::
BGP connection: non shared network
```

If available the following is shown:

- Session information
  - Neighbor address, ASN information and if the link is external or internal
  - BGP version and status
  - Neighbor capabilities for the BGP session
  - Number of messages transmitted and received
- IPv6 unicast address family information
  - BGP4+ table version
  - IPv6 Address Family dependent capabilities
  - IPv6 Communities
  - IPv6 Route filters for ingress and egress updates
  - Number of announced and accepted IPv6 prefixes
- Connection information
  - Connection counters
  - Graceful restart timer
  - Hop count to the peer
  - Next hop information
  - Local and external port numbers

**Related commands**

show ip bgp neighbors (BGP only)

**Command changes**

Added to AlliedWare Plus prior to 5.4.6-1

Version 5.4.7-2.1: BGP support added for IEx510, x550 series

Version 5.4.7-2.4: BGP support added for IE300 series

# show bgp ipv6 paths (BGP4+ only)

**Overview**

Use this command to display BGP4+ path information within an IPv6 environment. Use the show ip bgp paths (BGP only) command to display BGP path information within an IPv4 environment.

For information on filtering and saving command output, see the "Getting Started with AlliedWare Plus" Feature Overview and Configuration Guide.

**Syntax**

```
show bgp ipv6 paths
```

**Mode**

User Exec and Privileged Exec

**Example**

```
awplus# show bgp ipv6 paths
```

**Related commands**

show ip bgp paths (BGP only)

**Command changes**

Added to AlliedWare Plus prior to 5.4.6-1

Version 5.4.7-2.1: BGP support added for IEx510, x550 series

Version 5.4.7-2.4: BGP support added for IE300 series

# show bgp ipv6 prefix-list (BGP4+ only)

**Overview**

Use this command to display routes matching the prefix-list within an IPv6 environment. Use the show ip bgp prefix-list (BGP only) command to display routes matching the prefix-list within an IPv4 environment.

For information on filtering and saving command output, see the "Getting Started with AlliedWare Plus" Feature Overview and Configuration Guide.

**Syntax**

```
show bgp ipv6 prefix-list <list>
```

| Parameter | Description |
|---|---|
| *<list>* | Specifies the name of the IPv6 prefix list. |

**Mode**

User Exec and Privileged Exec

**Example**

```
awplus# show bgp ipv6 prefix-list mylist
```

**Related commands**

show ip bgp prefix-list (BGP only)

**Command changes**

Added to AlliedWare Plus prior to 5.4.6-1

Version 5.4.7-2.1: BGP support added for IEx510, x550 series

Version 5.4.7-2.4: BGP support added for IE300 series

# show bgp ipv6 quote-regexp (BGP4+ only)

**Overview**

Use this command to display routes matching the AS path regular expression within an IPv6 environment. Use the show ip bgp quote-regexp (BGP only) command to display routes matching the AS path regular expression within an IPv4 environment.

Note that you must use quotes to enclose the regular expression with this command. Use the regular expressions listed below with the <*expression*> parameter:

| Symbol | Character | Meaning |
|---|---|---|
| ^ | Caret | Used to match the beginning of the input string. When used at the beginning of a string of characters, it negates a pattern match. |
| $ | Dollar sign | Used to match the end of the input string. |
| . | Period | Used to match a single character (white spaces included). |
| * | Asterisk | Used to match none or more sequences of a pattern. |
| + | Plus sign | Used to match one or more sequences of a pattern. |
| ? | Question mark | Used to match none or one occurrence of a pattern. |
| _ | Underscore | Used to match spaces, commas, braces, parenthesis, or the beginning and end of an input string. |
| [ ] | Brackets | Specifies a range of single-characters. |
| - | Hyphen | Separates the end points of a range. |

For information on filtering and saving command output, see the "Getting Started with AlliedWare Plus" Feature Overview and Configuration Guide.

**Syntax**

```
show bgp ipv6 quote-regexp <expression>
```

**Mode**

User Exec and Privileged Exec

**Example**

```
awplus# show bgp ipv6 quote-regexp myexpression
```

**Related commands**

show ip bgp quote-regexp (BGP only)

**Command changes**

Added to AlliedWare Plus prior to 5.4.6-1

Version 5.4.7-2.1: BGP support added for IEx510, x550 series

Version 5.4.7-2.4: BGP support added for IE300 series

# show bgp ipv6 regexp (BGP4+ only)

**Overview**

Use this command to display routes matching the AS path regular expression within an IPv6 environment. Use the show ip bgp regexp (BGP only) command to display routes matching the AS path regular expression within an IPv4 environment.

Use the regular expressions listed below with the <*expression*> parameter:

| Symbol | Character | Meaning |
|---|---|---|
| ^ | Caret | Used to match the beginning of the input string. When used at the beginning of a string of characters, it negates a pattern match. |
| $ | Dollar sign | Used to match the end of the input string. |
| . | Period | Used to match a single character (white spaces included). |
| * | Asterisk | Used to match none or more sequences of a pattern. |
| + | Plus sign | Used to match one or more sequences of a pattern. |
| ? | Question mark | Used to match none or one occurrence of a pattern. |
| _ | Underscore | Used to match spaces, commas, braces, parenthesis, or the beginning and end of an input string. |
| [ ] | Brackets | Specifies a range of single-characters. |
| - | Hyphen | Separates the end points of a range. |

For information on filtering and saving command output, see the "Getting Started with AlliedWare Plus" Feature Overview and Configuration Guide.

**Syntax**

```
show bgp ipv6 regexp <expression>
```

| Parameter | Description |
|---|---|
| <*expression*> | Specifies a regular-expression to match the BGP4+ AS paths. |

**Mode**

User Exec and Privileged Exec

**Example**

```
awplus# show bgp ipv6 regexp myexpression
```

**Related commands**

show ip bgp regexp (BGP only)

**Command changes**

Added to AlliedWare Plus prior to 5.4.6-1

Version 5.4.7-2.1: BGP support added for IEx510, x550 series

Version 5.4.7-2.4: BGP support added for IE300 series

# show bgp ipv6 route-map (BGP4+ only)

**Overview**

Use this command to display BGP4+ routes that match the specified route-map within an IPv6 environment. Use the show ip bgp route-map (BGP only) command to display BGP routes that match the specified route-map within an IPv4 environment.

For information on filtering and saving command output, see the "Getting Started with AlliedWare Plus" Feature Overview and Configuration Guide.

**Syntax**

```
show bgp ipv6 route-map <route-map>
```

| Parameter | Description |
|---|---|
| *<route-map>* | Specifies a route-map that is matched. |

**Mode**

User Exec and Privileged Exec

**Example**

To show routes that match the route-map `myRouteMap`, use the command:

```
awplus# show bgp ipv6 route-map myRouteMap
```

**Related commands**

show ip bgp route-map (BGP only)

**Command changes**

Added to AlliedWare Plus prior to 5.4.6-1

Version 5.4.7-2.1: BGP support added for IEx510, x550 series

Version 5.4.7-2.4: BGP support added for IE300 series

# show bgp ipv6 summary (BGP4+ only)

**Overview** Use this command to display a summary of a BGP4+ neighbor status within an IPv6 environment. Use the show ip bgp summary (BGP only) command to display a summary of a BGP neighbor status within an IPv4 environment.

For information on filtering and saving command output, see the "Getting Started with AlliedWare Plus" Feature Overview and Configuration Guide.

**Syntax** `show bgp ipv6 summary`

**Mode** User Exec and Privileged Exec

**Example** `awplus# show bgp ipv6 summary`

**Output** Figure 31-5: Example output from the **show ip bgp summary** command

```
awplus>show ip bgp summary

BGP router identifier 1.0.0.1, local AS number 65541
BGP table version is 12
4 BGP AS-PATH entries
0 BGP community entries

Neighbor           V         AS   MsgRc  MsgSnt TblVer InOutQ Up/Down   State/PfxRcd
2001:0db8:cccc::1  4      65544      20      24     11 0/0    00:07:19          1
2001:0db8:dddd::1  4      65545       0       0      0 0/0    never        Active
2001:0db8:eeee::1  4      65542      34      40      0 0/0    00:00:04     Active
2001:0db8:ffff::1  4      65543      29      32     11 0/0    00:07:03         13

Number of neighbors 4
```

The Up/Down column in this output is a timer that shows:

- "never" if the peer session has never been established
- The up time, if the peer session is currently up
- The down time, if the peer session is currently down.

In the example above, the session with 2001:0db8:eeee::1 has been down for 4 seconds, and the session with 2001:0db8:dddd::1 has never been established.

**Related commands** show ip bgp summary (BGP only)

**Command changes** Added to AlliedWare Plus prior to 5.4.6-1

Version 5.4.7-2.1: BGP support added for IEx510, x550 series

Version 5.4.7-2.4: BGP support added for IE300 series

# show bgp memory maxallocation (BGP only)

**Overview**

This command displays the maximum percentage of total memory that is allocated to BGP processes.

For information on filtering and saving command output, see the "Getting Started with AlliedWare Plus" Feature Overview and Configuration Guide.

**Syntax**

```
show bgp memory maxallocation
```

**Mode**

User Exec and Privileged Exec

**Example**

To display the maximum amount of memory allocated for BGP processes, use the command:

```
awplus# show bgp memory maxallocation
```

**Output**

Figure 31-6: Example output from the **show bgp memory maxallocation** command

```
BGP maximum RAM allocation is 100%
```

**Command changes**

Added to AlliedWare Plus prior to 5.4.6-1

Version 5.4.7-2.1: BGP support added for IEx510, x550 series

Version 5.4.7-2.4: BGP support added for IE300 series

# show bgp nexthop-tracking (BGP only)

**Overview** Use this command to display BGP next hop tracking status.

**Syntax**

```
show bgp nexthop-tracking
```

**Mode** User Exec and Privileged Exec

**Example** To display BGP next hop tracking status, use the command:

```
awplus# show bgp nexthop-tracking
```

**Related commands**

bgp nexthop-trigger-count

show bgp nexthop-tree-details (BGP only)

**Command changes**

Added to AlliedWare Plus prior to 5.4.6-1

Version 5.4.7-2.1: BGP support added for IEx510, x550 series

Version 5.4.7-2.4: BGP support added for IE300 series

# show bgp nexthop-tree-details (BGP only)

**Overview** Use this command to display BGP next hop tree details.

**Syntax**

```
show bgp nexthop-tree-details
```

**Mode** User Exec and Privileged Exec

**Example** To display BGP next hop tree details, use the command:

```
awplus# show bgp nexthop-tree-details
```

**Related commands** show bgp nexthop-tracking (BGP only)

**Command changes** Added to AlliedWare Plus prior to 5.4.6-1

Version 5.4.7-2.1: BGP support added for IEx510, x550 series

Version 5.4.7-2.4: BGP support added for IE300 series

# show debugging bgp (BGP only)

**Overview** Use this command to see what debugging is turned on for BGP.

For information on filtering and saving command output, see the "Getting Started with AlliedWare Plus" Feature Overview and Configuration Guide.

**Syntax**

```
show debugging bgp
```

**Mode** User Exec and Privileged Exec

**Example**

```
awplus# show debugging bgp
```

**Output** Figure 31-7: Example output from the **show debugging bgp** command

```
BGP debugging status:
  BGP debugging is on
  BGP events debugging is on
  BGP updates debugging is on
  BGP fsm debugging is on
```

**Related commands** debug bgp (BGP only)

**Command changes** Added to AlliedWare Plus prior to 5.4.6-1

Version 5.4.7-2.1: BGP support added for IEx510, x550 series

Version 5.4.7-2.4: BGP support added for IE300 series

# show ip bgp (BGP only)

**Overview** Use this command to display BGP network information.

For information on filtering and saving command output, see the "Getting Started with AlliedWare Plus" Feature Overview and Configuration Guide.

**Syntax** `show ip bgp [<ip-addr>|<ip-addr/m>]`

| Parameter | Description |
|---|---|
| *<ip-addr>*<br>*<ip-addr/m>* | Specifies the IPv4 address and the optional prefix mask length. |

**Mode** User Exec and Privileged Exec

**Example** `awplus# show ip bgp 10.10.1.34/24`

**Output** Figure 31-8: Example output from the **show ip bgp** command

```
BGP table version is 7, local router ID is 80.80.80.80
Status codes: s suppressed, d damped, h history, * valid, >
best, i - internal, S Stale
Origin codes: i - IGP, e - EGP, ? - incomplete

   Network          Next Hop            Metric LocPrf Weight
Path
S>i10.70.0.0/24     192.10.23.67             0    100      0 ?
S>i30.30.30.30/32   192.10.23.67             0    100      0 ?
S>i63.63.63.1/32    192.10.23.67             0    100      0 ?
S>i67.67.67.67/32   192.10.23.67             0    100      0 ?
S>i172.22.10.0/24   192.10.23.67             0    100      0 ?
S>i192.10.21.0      192.10.23.67             0    100      0 ?
S>i192.10.23.0      192.10.23.67             0    100      0 ?

Total number of prefixes 7
```

**Related commands** neighbor remove-private-AS (BGP only)

**Command changes** Added to AlliedWare Plus prior to 5.4.6-1

Version 5.4.7-2.1: BGP support added for IEx510, x550 series

Version 5.4.7-2.4: BGP support added for IE300 series

# show ip bgp attribute-info (BGP only)

**Overview** Use this command to show internal attribute hash information.

For information on filtering and saving command output, see the "Getting Started with AlliedWare Plus" Feature Overview and Configuration Guide.

**Syntax**

```
show ip bgp attribute-info
```

**Mode** User Exec and Privileged Exec

**Example**

```
awplus# show ip bgp attribute-info
```

**Output** Figure 31-9: Example output from the **show ip bgp attribute-info** command

```
attr[1] nexthop 0.0.0.0
attr[1] nexthop 10.10.10.10
attr[1] nexthop 10.10.10.50
```

**Command changes** Added to AlliedWare Plus prior to 5.4.6-1

Version 5.4.7-2.1: BGP support added for IEx510, x550 series

Version 5.4.7-2.4: BGP support added for IE300 series

# show ip bgp cidr-only (BGP only)

**Overview** Use this command to display routes with non-natural network masks.

For information on filtering and saving command output, see the "Getting Started with AlliedWare Plus" Feature Overview and Configuration Guide.

**Syntax**

```
show ip bgp cidr-only
```

**Syntax (VRF-lite)**

```
show ip bgp [global|vrf <vrf-name>] cidr-only
```

| Parameter | Description |
|---|---|
| `global` | When VRF-lite is configured, apply the command to the global routing and forwarding table. |
| `vrf` | Apply the command to the specified VRF instance. |
| *<vrf-name>* | The name of the VRF instance. |

**Mode** User Exec and Privileged Exec

**Example**

```
awplus# show ip bgp cidr-only
awplus# show ip bgp vrf red cidr-only
```

**Output** Figure 31-10: Example output from the **show ip bgp cidr-only** command

```
BGP table version is 0, local router ID is 10.10.10.50

Status codes: s suppressed, d damped, h history, p stale, *
valid, > best, i - internal

Origin codes: i - IGP, e - EGP, ? - incomplete

   Network          Next Hop            Metric LocPrf Weight Path
*> 3.3.3.0/24       10.10.10.10                           0 11 i
*> 6.6.6.0/24       0.0.0.0                              32768 i

Total number of prefixes 2
```

**Command changes** Added to AlliedWare Plus prior to 5.4.6-1

Version 5.4.6-2.1: VRF-lite support added to BGP for AR-series products

Version 5.4.7-2.1: BGP support added for IEx510, x550 series

Version 5.4.7-2.4: BGP support added for IE300 series

# show ip bgp community (BGP only)

**Overview** Use this command to display routes that match specified communities from a BGP instance within an IPv4 environment. Use the show bgp ipv6 community (BGP4+ only) command within an IPv6 environment.

For information on filtering and saving command output, see the "Getting Started with AlliedWare Plus" Feature Overview and Configuration Guide.

You may use any combination and repetition of parameters listed in the *<type>* placeholder.

**Syntax**

```
show ip bgp community [<type>] [exact-match]
```

**Syntax (VRF-lite)**

```
show ip bgp [global|vrf <vrf-name>] community  [<type>]
[exact-match]
```

| Parameter | Description | |
|---|---|---|
| `global` | When VRF-lite is configured, apply the command to the global routing and forwarding table. | |
| `vrf` | Apply the command to the specified VRF instance. | |
| *<vrf-name>* | The name of the VRF instance. | |
| *<type>* | {[*AA:NN*][local-AS][no-advertise][no-export]} | |
| | *AA:NN* | Specifies the Autonomous System (AS) community number, in AA:NN format. |
| | `local-AS` | Do not send outside local Autonomous Systems (well-known community). |
| | `no-advertise` | Do not advertise to any peer (well-known community). |
| | `no-export` | Do not export to next AS (well-known community). |
| `exact-match` | Specifies that the exact match of the communities is displayed. This optional parameter cannot be repeated. | |

**Mode** User Exec and Privileged Exec

**Examples**

Note that the AS numbers shown are examples only.

```
awplus# show ip bgp community 64497:64499 exact-match
```

```
awplus# show ip bgp community 64497:64499 64500:64501
exact-match
```

```
awplus# show ip bgp community 64497:64499 64500:64501
64510:64511no-advertise
```

```
awplus# show ip bgp community no-advertise
no-advertiseno-advertise exact-match
```

```
awplus# show ip bgp community no-export 64510:64511
no-advertise local-AS no-export
```

```
awplus# show ip bgp community no-export 64510:64511
no-advertise 64497:64499 64500:64501 no-export
```

```
awplus# show ip bgp community no-export 64497:64499
no-advertise local-AS no-export
```

```
awplus# show ip bgp vrf red no-export
```

```
awplus# show ip bgp global 65500:2 65500:3 exact-match
```

**Related commands**

set community

show bgp ipv6 community (BGP4+ only)

**Command changes**

Added to AlliedWare Plus prior to 5.4.6-1

Version 5.4.6-2.1: VRF-lite support added to BGP for AR-series products

Version 5.4.7-2.1: BGP support added for IEx510, x550 series

Version 5.4.7-2.4: BGP support added for IE300 series

# show ip bgp community-info (BGP only)

**Overview** Use this command to list all BGP community information.

For information on filtering and saving command output, see the "Getting Started with AlliedWare Plus" Feature Overview and Configuration Guide.

**Syntax**

```
show ip bgp community-info
```

**Mode** User Exec and Privileged Exec

**Example**

```
awplus# show ip bgp community-info
```

**Command changes** Added to AlliedWare Plus prior to 5.4.6-1

Version 5.4.7-2.1: BGP support added for IEx510, x550 series

Version 5.4.7-2.4: BGP support added for IE300 series

# show ip bgp community-list (BGP only)

**Overview**

Use this command to display routes that match the given community-list from a BGP instance within an IPv4 environment. Use the show bgp ipv6 community-list (BGP4+ only) command within an IPv6 environment.

For information on filtering and saving command output, see the "Getting Started with AlliedWare Plus" Feature Overview and Configuration Guide.

**Syntax**

```
show ip bgp community-list <listname> [exact-match]
```

**Syntax (VRF-lite)**

```
show ip bgp [global|vrf <vrf-name>] community-list <listname>
[exact-match]
```

| Parameter | Description |
|---|---|
| `global` | When VRF-lite is configured, apply the command to the global routing and forwarding table. |
| `vrf` | Apply the command to the specified VRF instance. |
| `<vrf-name>` | The name of the VRF instance. |
| `<listname>` | Specifies the community list name. |
| `exact-match` | Displays only routes that have exactly the same specified communities. |

**Mode**

User Exec and Privileged Exec

**Example**

```
awplus# show ip bgp community-list mylist exact-match
awplus# show ip bgp vrf red community-list myCommunity
awplus# show ip bgp global community-list myExactCommunity
exact-match
```

**Related commands**

show bgp ipv6 community-list (BGP4+ only)

**Command changes**

Added to AlliedWare Plus prior to 5.4.6-1

Version 5.4.6-2.1: VRF-lite support added to BGP for AR-series products

Version 5.4.7-2.1: BGP support added for IEx510, x550 series

Version 5.4.7-2.4: BGP support added for IE300 series

# show ip bgp dampening (BGP only)

**Overview** Use this command to show dampened routes from a BGP instance within an IPv4 environment. Use the show bgp ipv6 dampening (BGP4+ only) command within an IPv6 environment.

For information on filtering and saving command output, see the "Getting Started with AlliedWare Plus" Feature Overview and Configuration Guide.

**Syntax**

```
show ip bgp dampening
{dampened-paths|flap-statistics|parameters}
```

**Syntax (VRF-lite)**

```
show ip bgp [global|vrf <vrf-name>] dampening
{dampened-paths|flap-statistics|parameters}
```

| Parameter | Description |
|---|---|
| `global` | When VRF-lite is configured, apply the command to the global routing and forwarding table. |
| `vrf` | Apply the command to the specified VRF instance. |
| `<vrf-name>` | The name of the VRF instance. |
| `dampened-paths` | Display paths suppressed due to dampening. |
| `flap-statistics` | Display flap statistics of routes. |
| `parameters` | Display details of configured dampening parameters. |

**Mode** User Exec and Privileged Exec

**Usage notes** Enable BGP dampening to maintain dampened-path information in memory.

**Examples**

```
awplus# show ip bgp dampening dampened-paths
awplus# show ip bgp vrf red dampening dampened-paths
awplus# show ip bgp global dampening flap-statistics
```

**Output** Figure 31-11: Example output from the **show ip bgp dampening** command

```
dampening 15 750 2000 60 15
 Reachability Half-Life time    : 15 min
 Reuse penalty                  : 750
 Suppress penalty               : 2000
 Max suppress time              : 60 min
 Un-reachability Half-Life time : 15 min
 Max penalty (ceil)             : 11999
 Min penalty (floor)            : 375
```

The following example output shows that the internal route (`i`), has flapped 3 times and is now categorized as history (h).

Figure 31-12: Example output from the **show ip bgp dampening flap-statistics** command

```
awplus# show ip bgp dampening flap-statistics
BGP table version is 1, local router ID is 30.30.30.77
Status codes: s suppressed, d damped, h history, * valid, > best, i - internal,S
Stale
Origin codes: i - IGP, e - EGP, ? - incomplete
   Network            From                Flaps  Duration  Reuse   Path
 hi1.1.1.0/24       10.100.0.62              3  00:01:20            i
```

The following example output shows a dampened route in the `1.1.1.0/24` network.

Figure 31-13: Example output from the **show ip bgp dampening dampened-path** command

```
awplus# show ip bgp dampening dampened-paths
BGP table version is 1, local router ID is 30.30.30.77
Status codes: s suppressed, d damped, h history, * valid, > best, i - internal,S
Stale
Origin codes: i - IGP, e - EGP, ? - incomplete

     Network            From              Reuse     Path
 di 1.1.1.0/24       10.100.0.62        00:35:10     i

Total number of prefixes 1
```

**Related commands**

show bgp ipv6 dampening (BGP4+ only)

**Command changes**

Added to AlliedWare Plus prior to 5.4.6-1

Version 5.4.6-2.1: VRF-lite support added to BGP for AR-series products

Version 5.4.7-2.1: BGP support added for IEx510, x550 series

Version 5.4.7-2.4: BGP support added for IE300 series

# show ip bgp filter-list (BGP only)

**Overview** Use this command to display routes conforming to the filter-list within an IPv4 environment. Use the show bgp ipv6 filter-list (BGP4+ only) command to display routes conforming to the filter-list within an IPv6 environment

For information on filtering and saving command output, see the "Getting Started with AlliedWare Plus" Feature Overview and Configuration Guide.

**Syntax**

```
show ip bgp filter-list <listname>
```

**Syntax (VRF-lite)**

```
show ip bgp [global|vrf <vrf-name>] filter-list <listname>
```

| Parameter | Description |
|---|---|
| `global` | When VRF-lite is configured, apply the command to the global routing and forwarding table. |
| `vrf` | Apply the command to the specified VRF instance. |
| `<vrf-name>` | The name of the VRF instance. |
| `<listname>` | Specifies the regular-expression access list name. |

**Mode** User Exec and Privileged Exec

**Example**

```
awplus# show ip bgp filter-list mylist
awplus# show ip bgp vrf red filter-list mylist
```

**Related commands** show bgp ipv6 filter-list (BGP4+ only)

**Command changes** Added to AlliedWare Plus prior to 5.4.6-1

Version 5.4.6-2.1: VRF-lite support added to BGP for AR-series products

Version 5.4.7-2.1: BGP support added for IEx510, x550 series

Version 5.4.7-2.4: BGP support added for IE300 series

# show ip bgp inconsistent-as (BGP only)

**Overview**

Use this command to display routes with inconsistent AS Paths within an IPv4 environment. Use the show bgp ipv6 inconsistent-as (BGP4+ only) command to display routes with inconsistent AS paths within an IPv6 environment.

For information on filtering and saving command output, see the "Getting Started with AlliedWare Plus" Feature Overview and Configuration Guide.

**Syntax**

```
show ip bgp inconsistent-as
```

**Syntax (VRF-lite)**

```
show ip bgp [global|vrf <vrf-name>] inconsistent-as
```

| Parameter | Description |
|---|---|
| `global` | When VRF-lite is configured, apply the command to the global routing and forwarding table. |
| `vrf` | Apply the command to the specified VRF instance. |
| `<vrf-name>` | The name of the VRF instance. |

**Mode**

User Exec and Privileged Exec

**Example**

```
awplus# show ip bgp inconsistent-as
awplus# show ip bgp global inconsistent-as
```

**Related commands**

show bgp ipv6 inconsistent-as (BGP4+ only)

**Command changes**

Added to AlliedWare Plus prior to 5.4.6-1

Version 5.4.6-2.1: VRF-lite support added to BGP for AR-series products

Version 5.4.7-2.1: BGP support added for IEx510, x550 series

Version 5.4.7-2.4: BGP support added for IE300 series

# show ip bgp longer-prefixes (BGP only)

**Overview**

Use this command to display the route of the local BGP routing table for a specific prefix with a specific mask, or for any prefix having a longer mask than the one specified.

For information on filtering and saving command output, see the "Getting Started with AlliedWare Plus" Feature Overview and Configuration Guide.

**Syntax**

```
show ip bgp <ip-address/m> longer-prefixes
```

**Syntax (VRF-lite)**

```
show ip bgp [global|vrf <vrf-name>] <ip-address/m>
longer-prefixes
```

| Parameter | Description |
|---|---|
| `global` | When VRF-lite is configured, apply the command to the global routing and forwarding table. |
| `vrf` | Apply the command to the specified VRF instance. |
| `<vrf-name>` | The name of the VRF instance. |
| `<ip-address/m>` | Neighbor's IP address and subnet mask, entered in the form A.B.C.D/M, where M is the subnet mask length. |

**Mode**

User Exec and Privileged Exec

**Example**

```
awplus# show ip bgp 10.10.0.10/24 longer-prefixes
awplus# show ip bgp vrf red 172.16.4.0/24
awplus# show ip bgp global 172.16.0.0/16 longer-prefixes
```

**Command changes**

Added to AlliedWare Plus prior to 5.4.6-1

Version 5.4.6-2.1: VRF-lite support added to BGP for AR-series products

Version 5.4.7-2.1: BGP support added for IEx510, x550 series

Version 5.4.7-2.4: BGP support added for IE300 series

# show ip bgp neighbors (BGP only)

**Overview** Use this command to display detailed information on peering connections to all BGP neighbors within an IPv4 environment.

Use the show bgp ipv6 neighbors (BGP4+ only) command to display detailed information on peering connections to all BGP4+ neighbors within an IPv6 environment.

For information on filtering and saving command output, see the "Getting Started with AlliedWare Plus" Feature Overview and Configuration Guide.

**Syntax [BGP]**

```
show ip bgp neighbors [<ipv4-addr> [advertised-routes|received
prefix-filter|received-routes|routes]]
```

**Syntax (VRF-lite)**

```
show ip bgp [global|vrf <vrf-name>] neighbors [<ipv4-addr>
routes]
```

| Parameter | Description |
|---|---|
| *<ipv4-addr>* | The IPv4 address of an IPv4 BGP neighbor, in dotted decimal notation A.B.C.D. |
| `advertised-routes` | Displays the routes advertised to a BGP neighbor. |
| `received prefix-filter` | Displays the received prefix-list filters. |
| `received-routes` | Displays the received routes from the neighbor. To display all the received routes from the neighbor, configure the BGP soft reconfigure first. |
| `routes` | Displays all accepted routes learned from neighbors. |
| `global` | When VRF-lite is configured, apply the command to the global routing and forwarding table. |
| `vrf` | Apply the command to the specified VRF instance. |
| *<vrf-name>* | The name of the VRF instance. |

**Mode [BGP]** User Exec and Privileged Exec

**Examples [BGP]**

```
awplus# show ip bgp neighbors 10.10.10.72 advertised-routes
awplus# show ip bgp neighbors 10.10.10.72 received
prefix-filter
awplus# show ip bgp neighbors 10.10.10.72 received-routes
awplus# show ip bgp neighbors 10.10.10.72 routes
```

**Output** Figure 31-14: Example output from **show ip bgp neighbors 10.10.10.72**

```
awplus#show ip bgp neighbors 10.10.10.72
BGP neighbor is 10.10.10.72, remote AS 100, local AS 100, internal
 link
 Member of peer-group group1 for session parameters
  BGP version 4, remote router ID 0.0.0.0
  BGP state = Active
  Last read         , hold time is 90, keepalive interval is 30 seconds
  Received 0 messages, 0 notifications, 0 in queue
  Sent 0 messages, 0 notifications, 0 in queue
  Route refresh request: received 0, sent 0
  Minimum time between advertisement runs is 5 seconds
 For address family: IPv4 Unicast
  BGP table version 1, neighbor version 0
  Index 1, Offset 0, Mask 0x2
  group1 peer-group member
  NEXT_HOP is always this router
  0 accepted prefixes
  0 announced prefixes

 Connections established 0; dropped 0
Next connect timer due in 33 seconds
```

If available the following is shown:

- Session information
  - Neighbor address, ASN information and if the link is external or internal
  - BGP version and status
  - Neighbor capabilities for the BGP session
  - Number of messages transmitted and received
- IPv4 unicast address family information
  - BGP table version
  - IPv4 Address Family dependent capabilities
  - IPv4 Communities
  - IPv4 Route filters for ingress and egress updates
  - Number of announced and accepted IPv4 prefixes
- Connection information
  - Connection counters
  - Graceful restart timer
  - Hop count to the peer
  - Next hop information
  - Local and external port numbers

**Related commands**

show bgp ipv6 neighbors (BGP4+ only)

**Command changes**

Added to AlliedWare Plus prior to 5.4.6-1

Version 5.4.6-2.1: VRF-lite support added to BGP for AR-series products

Version 5.4.7-2.1: BGP support added for IEx510, x550 series

Version 5.4.7-2.4: BGP support added for IE300 series

# show ip bgp neighbors connection-retrytime (BGP only)

**Overview** Use this command to display the configured connection-retrytime value of the peer at the session establishment time with the neighbor.

For information on filtering and saving command output, see the "Getting Started with AlliedWare Plus" Feature Overview and Configuration Guide.

**Syntax**

```
show ip bgp neighbors <ipv4-addr> connection-retrytime
```

| Parameter | Description |
|---|---|
| *<ipv4-addr>* | The IPv4 address of an IPv4 BGP neighbor, in dotted decimal notation A.B.C.D. |

**Mode** User Exec and Privileged Exec

**Example**

```
awplus# show ip bgp neighbors 10.11.4.26 connection-retrytime
```

**Command changes** Added to AlliedWare Plus prior to 5.4.6-1

Version 5.4.7-2.1: BGP support added for IEx510, x550 series

Version 5.4.7-2.4: BGP support added for IE300 series

# show ip bgp neighbors hold-time (BGP only)

**Overview**

Use this command to display the configured holdtime value of the peer at the session establishment time with the neighbor.

For information on filtering and saving command output, see the "Getting Started with AlliedWare Plus" Feature Overview and Configuration Guide.

**Syntax**

```
show ip bgp neighbors <ipv4-addr> hold-time
```

| Parameter | Description |
|---|---|
| *<ipv4-addr>* | The IPv4 address of an IPv4 BGP neighbor, in dotted decimal notation A.B.C.D. |

**Default**

The holdtime timer default is 90 seconds as per RFC 4271. Holdtime is keepalive * 3.

**Mode**

User Exec and Privileged Exec

**Examples**

```
awplus# show ip bgp neighbors 10.11.4.26 hold-time
```

**Related commands**

neighbor timers

show ip bgp neighbors keepalive-interval (BGP only)

timers (BGP)

**Command changes**

Added to AlliedWare Plus prior to 5.4.6-1

Version 5.4.7-2.1: BGP support added for IEx510, x550 series

Version 5.4.7-2.4: BGP support added for IE300 series

# show ip bgp neighbors keepalive (BGP only)

**Overview**

Use this command to display the number of keepalive messages sent to the neighbor from the peer throughout the session.

For information on filtering and saving command output, see the "Getting Started with AlliedWare Plus" Feature Overview and Configuration Guide.

**Syntax**

```
show ip bgp neighbors <ipv4-addr> keepalive
```

| Parameter | Description |
|---|---|
| *<ipv4-addr>* | The IPv4 address of an IPv4 BGP neighbor, in dotted decimal notation A.B.C.D. |

**Mode**

User Exec and Privileged Exec

**Examples**

```
awplus# show ip bgp neighbors 10.11.4.26 keepalive
```

**Related commands**

show ip bgp neighbors keepalive-interval (BGP only)

**Command changes**

Added to AlliedWare Plus prior to 5.4.6-1

Version 5.4.7-2.1: BGP support added for IEx510, x550 series

Version 5.4.7-2.4: BGP support added for IE300 series

# show ip bgp neighbors keepalive-interval (BGP only)

**Overview**

Use this command to display the configured keepalive-interval value of the peer at the session establishment time with the neighbor.

For information on filtering and saving command output, see the "Getting Started with AlliedWare Plus" Feature Overview and Configuration Guide.

**Syntax**

```
show ip bgp neighbors <ipv4-addr> keepalive-interval
```

| Parameter | Description |
|---|---|
| *<ipv4-addr>* | The IPv4 address of an IPv4 BGP neighbor, in dotted decimal notation A.B.C.D. |

**Default**

The keepalive timer default is 60 seconds as per RFC 4271. Keepalive is holdtime / 3.

**Mode**

User Exec and Privileged Exec

**Examples**

```
awplus# show ip bgp neighbors 10.11.4.26 keepalive-interval
```

**Related commands**

neighbor timers

show ip bgp neighbors hold-time (BGP only)

timers (BGP)

**Command changes**

Added to AlliedWare Plus prior to 5.4.6-1

Version 5.4.7-2.1: BGP support added for IEx510, x550 series

Version 5.4.7-2.4: BGP support added for IE300 series

# show ip bgp neighbors notification (BGP only)

**Overview** Use this command to display the number of notification messages sent to the neighbor from the peer throughout the session.

For information on filtering and saving command output, see the "Getting Started with AlliedWare Plus" Feature Overview and Configuration Guide.

**Syntax**

```
show ip bgp neighbors <ipv4-addr> notification
```

| Parameter | Description |
|---|---|
| *<ipv4-addr>* | The IPv4 address of an IPv4 BGP neighbor, in dotted decimal notation A.B.C.D. |

**Mode** User Exec and Privileged Exec

**Example**

```
awplus# show ip bgp neighbors 10.11.4.26 notification
```

**Command changes** Added to AlliedWare Plus prior to 5.4.6-1

Version 5.4.7-2.1: BGP support added for IEx510, x550 series

Version 5.4.7-2.4: BGP support added for IE300 series

# show ip bgp neighbors open (BGP only)

**Overview** Use this command to display the number of open messages sent to the neighbor from the peer throughout the session.

For information on filtering and saving command output, see the "Getting Started with AlliedWare Plus" Feature Overview and Configuration Guide.

**Syntax**

```
show ip bgp neighbors <ipv4-addr> open
```

| Parameter | Description |
|---|---|
| *<ipv4-addr>* | The IPv4 address of an IPv4 BGP neighbor, in dotted decimal notation A.B.C.D. |

**Mode** User Exec and Privileged Exec

**Example**

```
awplus# show ip bgp neighbors 10.11.4.26 open
```

**Command changes** Added to AlliedWare Plus prior to 5.4.6-1

Version 5.4.7-2.1: BGP support added for IEx510, x550 series

Version 5.4.7-2.4: BGP support added for IE300 series

# show ip bgp neighbors rcvd-msgs (BGP only)

**Overview** Use this command to display the number of messages received by the neighbor from the peer throughout the session.

For information on filtering and saving command output, see the "Getting Started with AlliedWare Plus" Feature Overview and Configuration Guide.

**Syntax**

```
show ip bgp neighbors <ipv4-addr> rcvd-msgs
```

| Parameter | Description |
|---|---|
| *<ipv4-addr>* | The IPv4 address of an IPv4 BGP neighbor, in dotted decimal notation A.B.C.D. |

**Mode** User Exec and Privileged Exec

**Example**

```
awplus# show ip bgp neighbors 10.11.4.26 rcvd-msgs
```

**Command changes** Added to AlliedWare Plus prior to 5.4.6-1

Version 5.4.7-2.1: BGP support added for IEx510, x550 series

Version 5.4.7-2.4: BGP support added for IE300 series

# show ip bgp neighbors sent-msgs (BGP only)

**Overview** Use this command to display the number of messages sent to the neighbor from the peer throughout the session.

For information on filtering and saving command output, see the "Getting Started with AlliedWare Plus" Feature Overview and Configuration Guide.

**Syntax**

```
show ip bgp neighbors <ipv4-addr> sent-msgs
```

| Parameter | Description |
|---|---|
| *<ipv4-addr>* | The IPv4 address of an IPv4 BGP neighbor, in dotted decimal notation A.B.C.D. |

**Mode** User Exec and Privileged Exec

**Example**

```
awplus# show ip bgp neighbors 10.11.4.26 sent-msgs
```

**Command changes** Added to AlliedWare Plus prior to 5.4.6-1

Version 5.4.7-2.1: BGP support added for IEx510, x550 series

Version 5.4.7-2.4: BGP support added for IE300 series

# show ip bgp neighbors update (BGP only)

**Overview** Use this command to display the number of update messages sent to the neighbor from the peer throughout the session.

For information on filtering and saving command output, see the "Getting Started with AlliedWare Plus" Feature Overview and Configuration Guide.

**Syntax**

```
show ip bgp neighbors <ipv4-addr> update
```

| Parameter | Description |
|---|---|
| *<ipv4-addr>* | The IPv4 address of an IPv4 BGP neighbor, in dotted decimal notation A.B.C.D. |

**Mode** User Exec and Privileged Exec

**Example**

```
awplus# show ip bgp neighbors 10.11.4.26 update
```

**Command changes** Added to AlliedWare Plus prior to 5.4.6-1

Version 5.4.7-2.1: BGP support added for IEx510, x550 series

Version 5.4.7-2.4: BGP support added for IE300 series

# show ip bgp paths (BGP only)

**Overview**

Use this command to display BGP4 path information within an IPv4 environment. Use the show bgp ipv6 paths (BGP4+ only) command to display BGP4+ path information within an IPv4 environment.

For information on filtering and saving command output, see the "Getting Started with AlliedWare Plus" Feature Overview and Configuration Guide.

**Syntax**

```
show ip bgp paths
```

**Mode**

User Exec and Privileged Exec

**Example**

```
awplus# show ip bgp paths
```

**Related commands**

show bgp ipv6 paths (BGP4+ only)

**Command changes**

Added to AlliedWare Plus prior to 5.4.6-1

Version 5.4.7-2.1: BGP support added for IEx510, x550 series

Version 5.4.7-2.4: BGP support added for IE300 series

# show ip bgp prefix-list (BGP only)

**Overview**

Use this command to display routes matching the prefix-list within an IPv4 environment. Use the show bgp ipv6 prefix-list (BGP4+ only) command to display routes matching the prefix-list within an IPv6 environment.

For information on filtering and saving command output, see the "Getting Started with AlliedWare Plus" Feature Overview and Configuration Guide.

**Syntax**

```
show ip bgp prefix-list <list>
```

**Syntax (VRF-lite)**

```
show ip bgp [global|vrf <vrf-name>] prefix-list <list>
```

| Parameter | Description |
|---|---|
| `global` | When VRF-lite is configured, apply the command to the global routing and forwarding table. |
| `vrf` | Apply the command to the specified VRF instance. |
| `<vrf-name>` | The name of the VRF instance. |
| `<list>` | Specifies the name of the IP prefix list. |

**Mode**

User Exec and Privileged Exec

**Examples**

```
awplus# show ip bgp prefix-list mylist
awplus# show ip bgp vrf red prefix-list myPrefixes
```

**Related commands**

show bgp ipv6 prefix-list (BGP4+ only)

**Command changes**

Added to AlliedWare Plus prior to 5.4.6-1

Version 5.4.6-2.1: VRF-lite support added to BGP for AR-series products

Version 5.4.7-2.1: BGP support added for IEx510, x550 series

Version 5.4.7-2.4: BGP support added for IE300 series

# show ip bgp quote-regexp (BGP only)

**Overview** Use this command to display routes matching the AS path regular expression within an IPv4 environment. Use the show bgp ipv6 quote-regexp (BGP4+ only) command to display routes matching the AS path regular expression within an IPv6 environment.

Note that you must use quotes to enclose the regular expression with this command. Use the regular expressions listed below with the <*expression*> parameter:

| Symbol | Character | Meaning |
|---|---|---|
| ^ | Caret | Used to match the beginning of the input string. When used at the beginning of a string of characters, it negates a pattern match. |
| $ | Dollar sign | Used to match the end of the input string. |
| . | Period | Used to match a single character (white spaces included). |
| * | Asterisk | Used to match none or more sequences of a pattern. |
| + | Plus sign | Used to match one or more sequences of a pattern. |
| ? | Question mark | Used to match none or one occurrence of a pattern. |
| _ | Underscore | Used to match spaces, commas, braces, parenthesis, or the beginning and end of an input string. |
| [ ] | Brackets | Specifies a range of single-characters. |
| - | Hyphen | Separates the end points of a range. |

For information on filtering and saving command output, see the "Getting Started with AlliedWare Plus" Feature Overview and Configuration Guide.

**Syntax**

```
show ip bgp quote-regexp <expression>
```

**Syntax (VRF-lite)**

```
show ip bgp [global|vrf <vrf-name>] quote-regexp <expression>
```

| Parameter | Description |
|---|---|
| `global` | When VRF-lite is configured, apply the command to the global routing and forwarding table. |
| `vrf` | Apply the command to the specified VRF instance. |
| <*vrf-name*> | The name of the VRF instance. |
| <*expression*> | Specifies a regular-expression to match the BGP AS paths. |

**Mode** User Exec and Privileged Exec

**Examples**

```
awplus# show ip bgp quote-regexp myexpression
awplus# show ip bgp global quote-regexp 65550 65555
```

**Related commands**

show bgp ipv6 quote-regexp (BGP4+ only)

**Command changes**

Added to AlliedWare Plus prior to 5.4.6-1

Version 5.4.6-2.1: VRF-lite support added to BGP for AR-series products

Version 5.4.7-2.1: BGP support added for IEx510, x550 series

Version 5.4.7-2.4: BGP support added for IE300 series

# show ip bgp regexp (BGP only)

**Overview** Use this command to display routes matching the AS path regular expression within an IPv4 environment. Use the show bgp ipv6 regexp (BGP4+ only) command to display routes matching the AS path regular expression within an IPv6 environment.

Use the regular expressions listed below with the <*expression*> parameter:

| Symbol | Character | Meaning |
|---|---|---|
| ^ | Caret | Used to match the beginning of the input string. When used at the beginning of a string of characters, it negates a pattern match. |
| $ | Dollar sign | Used to match the end of the input string. |
| . | Period | Used to match a single character (white spaces included). |
| * | Asterisk | Used to match none or more sequences of a pattern. |
| + | Plus sign | Used to match one or more sequences of a pattern. |
| ? | Question mark | Used to match none or one occurrence of a pattern. |
| _ | Underscore | Used to match spaces, commas, braces, parenthesis, or the beginning and end of an input string. |
| [ ] | Brackets | Specifies a range of single-characters. |
| - | Hyphen | Separates the end points of a range. |

For information on filtering and saving command output, see the "Getting Started with AlliedWare Plus" Feature Overview and Configuration Guide.

**Syntax**

```
show ip bgp regexp <expression>
```

**Syntax (VRF-lite)**

```
show ip bgp [global|vrf <vrf-name>] regexp <expression>
```

| Parameter | Description |
|---|---|
| `global` | When VRF-lite is configured, apply the command to the global routing and forwarding table. |
| `vrf` | Apply the command to the specified VRF instance. |
| `<vrf-name>` | The name of the VRF instance. |
| `<expression>` | Specifies a regular-expression to match the BGP AS paths. |

**Mode** User Exec and Privileged Exec

**Examples**

```
awplus# show ip bgp regexp myexpression
awplus# show ip bgp vrf red regexp 65550 65555
```

**Related commands**

show bgp ipv6 regexp (BGP4+ only)

**Command changes**

Added to AlliedWare Plus prior to 5.4.6-1

Version 5.4.6-2.1: VRF-lite support added to BGP for AR-series products

Version 5.4.7-2.1: BGP support added for IEx510, x550 series

Version 5.4.7-2.4: BGP support added for IE300 series

# show ip bgp route-map (BGP only)

**Overview**

Use this command to display BGP routes that match the specified route-map within an IPv4 environment. Use the show bgp ipv6 route-map (BGP4+ only) command to display BGP4+ routes that match the specified route-map within an IPv6 environment.

For information on filtering and saving command output, see the "Getting Started with AlliedWare Plus" Feature Overview and Configuration Guide.

**Syntax**

```
show ip bgp route-map <route-map>
```

**Syntax (VRF-lite)**

```
show ip bgp [global|vrf <vrf-name>] route-map <route-map>
```

| Parameter | Description |
|---|---|
| `global` | When VRF-lite is configured, apply the command to the global routing and forwarding table. |
| `vrf` | Apply the command to the specified VRF instance. |
| `<vrf-name>` | The name of the VRF instance. |
| `<route-map>` | Specifies a route-map that is matched. |

**Mode**

User Exec and Privileged Exec

**Examples**

To show routes that match the route-map `myRouteMap` for the global routing instance, use the command:

```
awplus# show ip bgp global route-map myRouteMap
```

To show routes that match the route-map `myRouteMap`, use the command:

```
awplus# show ip bgp route-map myRouteMap
```

**Related commands**

show bgp ipv6 route-map (BGP4+ only)

**Command changes**

Added to AlliedWare Plus prior to 5.4.6-1

Version 5.4.6-2.1: VRF-lite support added to BGP for AR-series products

Version 5.4.7-2.1: BGP support added for IEx510, x550 series

Version 5.4.7-2.4: BGP support added for IE300 series

# show ip bgp scan (BGP only)

**Overview** Use this command to display BGP scan status.

For information on filtering and saving command output, see the "Getting Started with AlliedWare Plus" Feature Overview and Configuration Guide.

**Syntax** `show ip bgp scan`

**Mode** User Exec and Privileged Exec

**Example** `awplus# show ip bgp scan`

**Output** Figure 31-15: Example output from the **show ip bgp scan** command

```
BGP scan is running
BGP scan interval is 60
BGP instance : AS is 11,DEFAULT
Current BGP nexthop cache:
BGP connected route:
 10.10.10.0/24
 10.10.11.0/24
```

**Command changes** Added to AlliedWare Plus prior to 5.4.6-1

Version 5.4.7-2.1: BGP support added for IEx510, x550 series

Version 5.4.7-2.4: BGP support added for IE300 series

# show ip bgp summary (BGP only)

**Overview** Use this command to display a summary of a BGP neighbor status within an IPv4 environment. Use the show bgp ipv6 summary (BGP4+ only) command to display a summary of BGP4+ neighbors.

For information on filtering and saving command output, see the "Getting Started with AlliedWare Plus" Feature Overview and Configuration Guide.

**Syntax**

```
show ip bgp summary
```

**Syntax (VRF-lite)**

```
show ip bgp [global|vrf <vrf-name>] summary
```

| Parameter | Description |
|---|---|
| `global` | When VRF-lite is configured, apply the command to the global routing and forwarding table. |
| `vrf` | Apply the command to the specified VRF instance. |
| `<vrf-name>` | The name of the VRF instance. |

**Mode** User Exec and Privileged Exec

**Examples**

```
awplus# show ip bgp summary
awplus# show ip bgp vrf red summary
```

**Output** Figure 31-16: Example output from the **show ip bgp summary** command

```
awplus>show ip bgp summary

BGP router identifier 1.0.0.1, local AS number 65541
BGP table version is 12
4 BGP AS-PATH entries
0 BGP community entries

Neighbor        V         AS   MsgRc  MsgSnt TblVer InOutQ Up/Down   State/PfxRcd
192.168.3.2     4      65544      20      24     11 0/0    00:07:19          1
192.168.4.2     4      65545       0       0      0 0/0    never        Active
192.168.11.2    4      65542      34      40      0 0/0    00:00:04     Active
192.168.21.2    4      65543      29      32     11 0/0    00:07:03         13

Number of neighbors 4
```

The Up/Down column in this output is a timer that shows:

- "never" if the peer session has never been established
- The up time, if the peer session is currently up
- The down time, if the peer session is currently down.

In the example above, the session with 192.168.11.2 has been down for 4 seconds, and the session with 192.168.4.2 has never been established.

**Related commands**

show bgp ipv6 summary (BGP4+ only)

**Command changes**

Added to AlliedWare Plus prior to 5.4.6-1

Version 5.4.6-2.1: VRF-lite support added to BGP for AR-series products

Version 5.4.7-2.1: BGP support added for IEx510, x550 series

Version 5.4.7-2.4: BGP support added for IE300 series

# show ip community-list

**Overview** Use this command to display routes that match a specified community-list name or number.

For information on filtering and saving command output, see the "Getting Started with AlliedWare Plus" Feature Overview and Configuration Guide.

**Syntax**

```
show ip community-list [<listnumber>|<listname>]
```

| Parameter | Description |
|---|---|
| *<listnumber>* | Specifies the community list number in the range <1-199> as specified by a previously issued **ip community-list** command. |
| *<listname>* | Specifies the community list name as specified by a previously issued ip community-list command. |

**Mode** User Exec and Privileged Exec

**Examples**

```
awplus# show ip community-list mylist
awplus# show ip community-list 99
```

**Related commands**

ip community-list

ip community-list expanded

ip community-list standard

**Command changes**

Added to AlliedWare Plus prior to 5.4.6-1

Version 5.4.7-2.1: BGP support added for IEx510, x550 series

Version 5.4.7-2.4: BGP support added for IE300 series

# show ip extcommunity-list

**Overview** Use this command to display a configured extcommunity-list.

For information on filtering and saving command output, see the "Getting Started with AlliedWare Plus" Feature Overview and Configuration Guide.

**Syntax**

```
show ip extcommunity-list [<1-199>|<extcommunity-listname>]
```

| Parameter | Description |
|---|---|
| *<1-199>* | Extcommunity-list number |
| *<extcommunity-listname>* | Extcommunity-list name |

**Mode** User Exec and Privileged Exec

**Example**

```
awplus# show ip extcommunity-list 33
```

**Related commands**

ip extcommunity-list expanded

ip extcommunity-list standard

**Command changes**

Added to AlliedWare Plus prior to 5.4.6-1

Version 5.4.7-2.1: BGP support added for IEx510, x550 series

Version 5.4.7-2.4: BGP support added for IE300 series

# show ip prefix-list

**Overview** Use this command to display the IPv4 prefix-list entries.

Note that this command is valid for RIP and BGP routing protocols only.

**Syntax**

```
show ip prefix-list [<name>|detail|summary]
```

| Parameter | Description |
|---|---|
| <*name*> | Specify the name of a prefix list in this placeholder. |
| `detail` | Specify this parameter to show detailed output for all IPv4 prefix lists. |
| `summary` | Specify this parameter to show summary output for all IPv4 prefix lists. |

**Mode** User Exec and Privileged Exec

**Example**

```
awplus# show ip prefix-list
awplus# show ip prefix-list 10.10.0.98/8
awplus# show ip prefix-list detail
```

**Related commands** ip prefix-list

# show ipv6 prefix-list

**Overview** Use this command to display the prefix-list entries.

Note that this command is valid for RIPng and BGP4+ routing protocols only.

**Syntax**

```
show ipv6 prefix-list [<name>|detail|summary]
```

| Parameter | Description |
|---|---|
| *<name>* | Specify the name of an individual IPv6 prefix list. |
| `detail` | Specify this parameter to show detailed output for all IPv6 prefix lists. |
| `summary` | Specify this parameter to show summary output for all IPv6 prefix lists. |

**Mode** User Exec and Privileged Exec

**Example**

```
awplus# show ipv6 prefix-list
awplus# show ipv6 prefix-list 10.10.0.98/8
awplus# show ipv6 prefix-list detail
```

**Related commands** ipv6 prefix-list

# show ip protocols bgp (BGP only)

**Overview** Use this command to display BGP process parameters and statistics.

For information on filtering and saving command output, see the "Getting Started with AlliedWare Plus" Feature Overview and Configuration Guide.

**Syntax**

```
show ip protocols bgp
```

**Mode** User Exec and Privileged Exec

**Example** To display BGP process parameters and statistics, use the command:

```
awplus# show ip protocols bgp
```

**Output** Figure 31-17: Example output from the **show ip protocols bgp** command

```
Routing Protocol is "bgp 100"
  IGP synchronization is disabled
  Automatic route summarization is disabled
  Default local-preference applied to incoming route is 100
  Redistributing:
  Neighbor(s):
  Address AddressFamily FiltIn FiltOut DistIn DistOut RouteMapIn RouteMapOut
Weight
10.10.10.1              unicast
```

**Command changes** Added to AlliedWare Plus prior to 5.4.6-1

Version 5.4.7-2.1: BGP support added for IEx510, x550 series

Version 5.4.7-2.4: BGP support added for IE300 series

# show route-map

**Overview** Use this command to display information about one or all route maps.

**Syntax** `show route-map <map-name>`

| Parameter | Description |
|---|---|
| *<map-name>* | A name to identify the route map. |

**Mode** User Exec and Privileged Exec

**Example** To display information about the route-map named `example-map`, use the command:

```
awplus# show route-map example-map
```

**Output** Figure 31-18: Example output from the **show route-map** command

```
route-map example-map, permit, sequence 1
  Match clauses:
    ip address prefix-list example-pref
  Set clauses:
    metric 100
route-map example-map, permit, sequence 200
  Match clauses:
  Set clauses:
```

**Related commands** route-map

# synchronization

**Overview** Use this command in Router Configuration mode or in Address Family Configuration mode to ensure BGP does not advertise router learned from iBGP peers until they are learned locally, or are propagated throughout the AS via an IGP.

Use the **no** variant of this command to disable this function.

**Syntax**

```
synchronization
no synchronization
```

**Default** Disabled.

**Mode** Router Configuration and Address Family Configuration mode

**Usage notes** Synchronization is used when a BGP router should not advertise routes learned from iBGP neighbors, unless those routes are also present in an IGP (for example, OSPF). These routes must be in the RIB (Routing Information Base) learned locally or via an IGP.

Synchronization may be enabled when all the routers in an autonomous system do not speak BGP, and the autonomous system is a transit for other autonomous systems.

Use the **no synchronization** command when BGP router can advertise routes learned from iBGP neighbors, without waiting for IGP reachability, when routes are in the RIB.

**Example** The following example enables IGP synchronization of iBGP routes in Router Configuration mode:

```
awplus# configure terminal
awplus(config)# router bgp 11
awplus(config-router)# synchronization
```

The following example enables IGP synchronization of iBGP routes in IPv4 unicast Address Family Configuration mode:

```
awplus# configure terminal
awplus(config)# router bgp 11
awplus(config)# address-family ipv4 unicast
awplus(config-af)# synchronization
```

The following example enables IGP synchronization of iBGP routes in the IPv6 unicast Address Family Configuration mode:

```
awplus# configure terminal
awplus(config)# router bgp 11
awplus(config)# address-family ipv6 unicast
awplus(config-af)# synchronization
```

**Command changes**

Added to AlliedWare Plus prior to 5.4.6-1

Version 5.4.7-2.1: BGP support added for IEx510, x550 series

Version 5.4.7-2.4: BGP support added for IE300 series

# timers (BGP)

**Overview** Use this command sets the BGP keepalive timer and holdtime timer values.

Use the **no** variant of this command to reset timers to the default.

**Syntax**

```
timers bgp <keepalive> <holdtime>
no timers bgp [<keepalive> <holdtime>]
```

| Parameter | Description |
|---|---|
| *<keepalive>* | *<0-65535>* The frequency with which the keepalive messages are sent to the neighbors. The default is 30 seconds as per RFC 4271. Cisco IOS uses a 60 second keepalive timer default value. Adjust keepalive timers for interoperability as required. Maintain the keepalive value at the holdtime value / 3. |
| *<holdtime>* | *<0-65535>* The interval after which the neighbor is considered dead if keepalive messages are not received. The default holdtime value is 90 seconds as per RFC 4271.<br>Cisco IOS uses a 180 second holdtime timer default value. Adjust holdtime timers for interoperability as required. Maintain the holdtime value at the keepalive value * 3. |

**Default** The keepalive timer default is 60 seconds, the holdtime timer default is 90 seconds, and the connect timer default is 120 seconds as per RFC 4271. Holdtime is keepalive * 3.

**Mode** Router Configuration

**Usage notes** This command is used globally to set or unset the keepalive and holdtime values for all the neighbors.

**Examples**

```
awplus# configure terminal
awplus(config)# router bgp 10
awplus(config-router)# timers bgp 40 120
awplus# configure terminal
awplus(config)# router bgp 10
awplus(config-router)# no timers bgp 30 90
awplus# configure terminal
awplus(config)# router bgp 10
awplus(config-router)# no timers bgp
```

**Related commands**

neighbor timers

show ip bgp neighbors hold-time (BGP only)

show ip bgp neighbors keepalive-interval (BGP only)

**Command changes**

Added to AlliedWare Plus prior to 5.4.6-1

Version 5.4.7-2.1: BGP support added for IEx510, x550 series

Version 5.4.7-2.4: BGP support added for IE300 series

# undebug bgp (BGP only)

**Overview** Use this command to disable BGP debugging functions.

**Syntax**

```
undebug bgp
[all|dampening|events|filters|fsm|keepalives|nht|nsm|updates]
```

```
undebug all bgp
```

| Parameter | Description |
|---|---|
| `all` | Disable all debugging for BGP. |
| `dampening` | Disable debugging for BGP dampening. |
| `events` | Disable debugging for BGP events. |
| `filters` | Disable debugging for BGP filters. |
| `fsm` | Disable debugging for BGP Finite State Machine (FSM). |
| `keepalives` | Disable debugging for BGP keepalives. |
| `nht` | Disable debugging for BGP NHT (Next Hop Tracking) messages. |
| `nsm` | Disable debugging for NSM messages. |
| `updates` | Disable debugging for BGP updates. |

**Mode** Privileged Exec and Global Configuration

**Example**

```
awplus# undebug bgp events
awplus# undebug bgp nht
awplus# undebug bgp updates
```

**Related commands** debug bgp (BGP only)

**Command changes** Added to AlliedWare Plus prior to 5.4.6-1

Version 5.4.7-2.1: BGP support added for IEx510, x550 series

Version 5.4.7-2.4: BGP support added for IE300 series

# 32 Route Map Commands

## Introduction

**Overview** This chapter provides an alphabetical reference for route map commands. For more information, see the Routemaps Feature Overview and Configuration Guide. These commands can be divided into the following categories:

- the route-map command, which is used to create a route map and/or route map entry, and to put you into route map mode
- **match** commands, used to determine which routes or BGP update messages the route map applies to
- **set** commands, used to modify matching routes or BGP update messages

**Command List**


- "match as-path" on page 1525
- "match community" on page 1526
- "match interface" on page 1528
- "match ip address" on page 1529
- "match ip next-hop" on page 1531
- "match ipv6 address" on page 1533
- "match ipv6 next-hop" on page 1535
- "match metric" on page 1536
- "match origin" on page 1537
- "match route-type" on page 1539
- "match tag" on page 1540
- "route-map" on page 1541
- "set aggregator" on page 1544
- "set as-path" on page 1545
- "set atomic-aggregate" on page 1546

- "set comm-list delete" on page 1547
- "set community" on page 1548
- "set dampening" on page 1550
- "set extcommunity" on page 1552
- "set ip next-hop (route map)" on page 1554
- "set ipv6 next-hop" on page 1555
- "set local-preference" on page 1556
- "set metric" on page 1557
- "set metric-type" on page 1559
- "set origin" on page 1560
- "set originator-id" on page 1561
- "set tag" on page 1562
- "set weight" on page 1563
- "show route-map" on page 1564

# match as-path

**Overview**

Use this command to add an autonomous system (AS) path match clause to a route map entry. Specify the AS path attribute value or values to match by specifying the name of an AS path access list.

A BGP update message matches the route map if its attributes include AS path values that match the AS path access list.

Each entry of a route map can only match against one AS path access list in one AS path match clause. If the route map entry already has an AS path match clause, entering this command replaces that match clause with the new clause.

Note that AS path access lists and route map entries both specify an action of deny or permit. The action in the AS path access list determines whether the route map checks update messages for a given AS path value. The route map action and its **set** clauses determine what the route map does with update messages that contain that AS path value.

Use the **no** variant of this command to remove the AS path match clause from a route map entry.

**Syntax**

```
match as-path <as-path-listname>
no match as-path [<as-path-listname>]
```

| Parameter | Description |
|---|---|
| *<as-path-listname>* | Specifies an AS path access list name. |

**Mode**

Route-map Configuration

**Usage notes**

This command is valid for BGP update messages only.

**Example**

To add entry 34 to the route map called `myroute`, which will discard update messages if they contain the AS path values that are included in `myaccesslist`, use the commands:

```
awplus# configure terminal
awplus(config)# route-map myroute deny 34
awplus(config-route-map)# match as-path myaccesslist
```

**Related commands**

route-map

set as-path

show route-map

**Command changes**

Added to AlliedWare Plus prior to 5.4.6-1

Version 5.4.7-2.1: BGP support added for IEx510, x550 series

Version 5.4.7-2.4: BGP support added for IE300 series

# match community

**Overview**

Use this command to add a community match clause to a route map entry. Specify the community value or values to match by specifying a community list. To create the community list, enter Global Configuration mode and use the ip community-list command.

A BGP update message matches the route map if its attributes include community values that match the community list.

Each entry of a route map can only match against one community list in one community match clause. If the route map entry already has a community match clause, entering this command replaces that match clause with the new clause.

Note that community lists and route map entries both specify an action of deny or permit. The action in the community list determines whether the route map checks update messages for a given community value. The route map action and its **set** clauses determine what the route map does with update messages that contain that community value.

Use the **no** variant of this command to remove the community match clause from a route map.

**Syntax**

```
match community
{<community-listname>|<1-99>|<100-199>}[exact-match]
```

```
no match community
[<community-listname>|<1-99>|<100-199>|exact-match]
```

| Parameter | Description |
|---|---|
| *<community-listname>* | The community list name or number. |
| *<1-99>* | Community list number (standard range). |
| *<100-199>* | Community list number (expanded range). |
| exact-match | Exact matching of communities. |

**Mode**

Route-map Configuration

**Usage notes**

This command is valid for BGP update messages only.

Communities are used to group and filter routes. They are designed to provide the ability to apply policies to large numbers of routes by using match and set commands. Community lists are used to identify and filter routes by their common attributes.

**Example**

To add entry 3 to the route map called `myroute`, which will process update messages if they contain the community values that are included in `mylist`, use the commands:

```
awplus# configure terminal
awplus(config)# route-map myroute permit 3
awplus(config-route-map)# match community mylist
```

**Related commands**

ip community-list

route-map

set comm-list delete

set community

show route-map

**Command changes**

Added to AlliedWare Plus prior to 5.4.6-1

Version 5.4.7-2.1: BGP support added for IEx510, x550 series

Version 5.4.7-2.4: BGP support added for IE300 series

# match interface

**Overview**

Use this command to add an interface match clause to a route map entry. Specify the interface name to match.

A route matches the route map if its interface matches the interface name.

Each entry of a route map can only match against one interface in one interface match clause. If the route map entry already has an interface match clause, entering this command replaces that match clause with the new clause.

Use the **no** variant of this command to remove the interface match clause from the route map entry. Use the **no** variant of this command without a specified interface to remove all interfaces.

**Syntax**

```
match interface <interface>
no match interface [<interface>]
```

| Parameter | Description |
|---|---|
| *<interface>* | The VLAN to match, e.g. `vlan2`. |

**Mode**

Route-map Configuration

**Usage**

This command is valid for RIP and OSPF routes only.

**Example**

To add entry `10` to the route map called `mymap1`, which will process routes if they use the interface `vlan1`, use the commands:

```
awplus# configure terminal
awplus(config)# route-map mymap1 permit 10
awplus(config-route-map)# match interface vlan1
```

To remove all interfaces from the route map called `mymap1`, use the commands:

```
awplus# configure terminal
awplus(config)# route-map mymap1 permit 10
awplus(config-route-map)# no match interface
```

**Related commands**

match ip address

match ip next-hop

match route-type

match tag

route-map

show route-map

# match ip address

**Overview** Use this command to add an IP address prefix match clause to a route map entry. You can specify the prefix or prefixes to match by specifying the name of the prefix list. To create the prefix list, enter Global Configuration mode and use the **ip prefix-list** command.

A route matches the route map entry if the route's prefix matches the prefix list.

Use the **no** variant of this command to remove the IP address match clause from a route map entry.

**Syntax**

```
match ip address prefix-list <prefix-listname>
no match ip address prefix-list <prefix-listname>
```

| Parameter | Description |
|---|---|
| `prefix-list` | Use an IP prefix list to specify which prefixes to match. |
| | *<prefix-listname>* The prefix list name. |

**Mode** Route-map Configuration

**Usage notes** Each entry of a route map can have at most one prefix list-based IP address match clause. If the route map entry already has one match clause, entering this command replaces that match clause with the new clause.

Note that prefix lists and route map entries both specify an action of deny or permit. The action in the prefix list determines whether the route map checks update messages and routes for a given prefix. The action in the route map, and the map's **set** clauses, determine what the device does with update messages or routes that contain that prefix.

If the **match ip address** command results in a match against the specified IP address, then the outcome is:

- If **permit** is specified, then the route is redistributed or controlled, as specified by the set action.
- If **deny** is specified, then the route is not redistributed or controlled.

If the match criteria are not met, the route is neither accepted nor forwarded, irrespective of **permit** or **deny** specifications.

This command is valid for:

- OSPF routes
- routes in BGP update messages
- RIP routes.

**Examples**

To add entry 3 to the route map called 'rmap1', which will process routes that match the prefix list called 'mylist', use the commands:

```
awplus# configure terminal
awplus(config)# route-map rmap1 permit 3
awplus(config-route-map)# match ip address prefix-list mylist
```

**Related commands**

route-map

show route-map

# match ip next-hop

**Overview** Use this command to add a next-hop match clause to a route map entry. You can specify the next hop to match by specifying the name of a prefix list. To create the prefix list, enter Global Configuration mode and use the **ip prefix-list** command.

A route matches the route map if the route's next hop matches the prefix list.

Each entry of a route map can have at most one prefix list-based next-hop match clause. If the route map entry already has one match clause, entering this command replaces that match clause with the new clause.

Note that the lists and route map entries specify an action of deny or permit. The action in the list determines whether the route map checks update messages and routes for a given next-hop value. The route map action and its **set** clauses determine what the route map does with update messages and routes that contain that next hop.

Use the **no** variant of this command to remove the next-hop match clause from a route map entry. To remove a prefix list-based match clause you must also specify the prefix-list parameter.

**Syntax**

```
match ip next-hop prefix-list <prefix-listname>
no match ip next-hop prefix-list [<prefix-listname>]
```

| Parameter | Description |
|---|---|
| `prefix-list` | Use an IP prefix list to specify which next hops to match. |
| | *<prefix-listname>* The prefix list name. |

**Mode** Route-map Configuration

**Usage notes** This command is valid for:

- OSPF routes
- routes in BGP update messages
- RIP routes.

**Examples** To add entry 3 to the route map called 'mymap', which will process routes whose next hop matches the prefix list called 'list1', use the commands:

```
awplus# configure terminal
awplus(config)# route-map mymap permit 3
awplus(config-route-map)# match ip next-hop prefix-list list1
```

**Related commands**

ip prefix-list

route-map

show ip prefix-list

show route-map

# match ipv6 address

**Overview** Use this command to add an IPv6 address prefix match clause to a route map entry. You can specify the prefix or prefixes to match by specifying the name of the prefix list. To create the prefix list, enter Global Configuration mode and use the **ipv6 prefix-list** command.

A route matches the route map entry if the route's prefix matches the prefix list.

Use the **no** variant of this command to remove the IPv6 address match clause from a route map entry.

**Syntax**

```
match ipv6 address prefix-list <prefix-listname>
no match ipv6 address
no match ipv6 address prefix-list <prefix-listname>
```

| Parameter | Description |
|---|---|
| `prefix-list` | Use an IP prefix list to specify which prefixes to match. |
| `<prefix-listname>` | The prefix list name. |

**Mode** Route-map Configuration

**Usage notes** Each entry of a route map can have at most one prefix list-based IPv6 address match clause. If the route map entry already has one match clause, entering this command replaces that match clause with the new clause.

Note that prefix lists and route map entries all specify an action of deny or permit. The action in the prefix list determines whether the route map checks update messages and routes for a given prefix. The action in the route map, and the map's **set** clauses, determine what the device does with update messages or routes that contain that prefix.

If the **match ipv6 address** command results in a match against the specified IPv6 address, then the outcome is:

- If **permit** is specified, then the route is redistributed or controlled, as specified by the set action.
- If **deny** is specified, then the route is not redistributed or controlled.

If the match criteria are not met, the route is neither accepted nor forwarded, irrespective of **permit** or **deny** specifications.

This command is valid for:

- OSPF routes
- routes in BGP update messages
- RIP routes.

**Examples** To match traffic according to the prefix list named “mylist”, use the commands:

```
awplus# configure terminal
awplus(config)# route-map rmap1 permit 3
awplus(config-route-map)# match ipv6 address prefix-list mylist
```

# match ipv6 next-hop

**Overview** Use this command to specify a next-hop address to be matched by the route-map.

Use the **no** variant of this command to disable this function.

**Syntax**

```
match ipv6 next-hop <ipv6-addr>
match ipv6 next-hop prefix-list <prefix-listname>
match ipv6 next-hop [<ipv6-addr>]
match ipv6 next-hop [prefix-list <prefix-listname>]
```

| Parameter | Description |
|---|---|
| *<ipv6-addr>* | The IPv6 address of the next hop. The IPv6 address uses the format X:X::X:X. |
| *<prefix-listname>* | The name of the IPv6 prefix list that specifies criteria for the addresses to be matched. |

**Mode** Route-map Configuration

**Usage notes** The **match ipv6 next-hop** command specifies the next-hop address to be matched. If there is a match for the specified next-hop address, and permit is specified, the route is redistributed or controlled as specified by the set action. If the match criteria are met, and deny is specified, the route is not redistributed or controlled. If the match criteria are not met, the route is neither accepted nor forwarded, irrespective of permit or deny specifications.

***NOTE:*** *This command is valid only for BGP.*

**Example**

```
awplus# configure terminal
awplus(config)# route-map rmap1 permit 3
awplus(config-route-map)# match ipv6 next-hop 2001:0db8::/32
```

# match metric

**Overview**

Use this command to add a metric match clause to a route map entry. Specify the metric value to match.

A route matches the route map if its metric matches the route map's metric.

A BGP update message matches the route map if its MED attribute value matches the route map's metric.

Each entry of a route map can only match against one metric value in one metric match clause. If the route map entry already has a metric match clause, entering this command replaces that match clause with the new clause.

Use the **no** variant of this command to remove the metric match clause from the route map entry.

**Syntax**

```
match metric <metric>
no match metric [<metric>]
```

| Parameter | Description |
|---|---|
| *<metric>* | *<0-4294967295>* Specifies the metric value. |

**Mode**

Route-map Configuration

**Usage notes**

This command is valid for:

- OSPF routes
- routes in BGP update messages
- RIP routes.

**Example**

To stop entry 3 of the route map called "myroute" from processing routes with a metric of 888999, use the commands:

```
awplus# configure terminal
awplus(config)# route-map myroute permit 3
awplus(config-route-map)# no match metric 888999
```

**Related commands**

route-map

set metric

show route-map

# match origin

**Overview** Use this command to add an origin match clause to a route map entry. Specify the origin attribute value to match.

A BGP update message matches the route map if its origin attribute value matches the route map's origin value.

Each entry of a route map can only match against one origin in one origin match clause. If the route map entry already has an origin match clause, entering this command replaces that match clause with the new clause.

Use the **no** variant of this command to remove the origin match clause from the route map entry.

**Syntax**

```
match origin {egp|igp|incomplete}
no match origin [egp|igp|incomplete]
```

| Parameter | Description |
|---|---|
| `egp` | Learned from an exterior gateway protocol. |
| `igp` | Learned from a local interior gateway protocol. |
| `incomplete` | Of unknown heritage, for example a static route. |

**Mode** Route-map Configuration

**Usage** The origin attribute defines the origin of the path information. The **egp** parameter is indicated as an **e** in the routing table, and it indicates that the origin of the information is learned via Exterior Gateway Protocol. The **igp** parameter is indicated as an **i** in the routing table, and it indicates the origin of the path information is interior to the originating AS. The **incomplete** parameter is indicated as a **?** in the routing table, and indicates that the origin of the path information is unknown or learned through other means. If a static route is redistributed into BGP, the origin of the route is incomplete.

The **match origin** command specifies the origin to be matched. If there is a match for the specified origin, and **permit**is specified, the route is redistributed or controlled as specified by the set action. If the match criteria are met, and deny is specified, the route is not redistributed or controlled. If the match criteria are not met, the route is neither accepted nor forwarded, irrespective of **permit** or **deny** specifications.

This command is valid for BGP update messages only.

**Example** To add entry 34 to the route map called "rmap1", which will drop externally-originated routes, use the commands:

```
awplus# configure terminal
awplus(config)# route-map myroute deny 34
awplus(config-route-map)# match origin egp
```

**Related commands**

route-map

set origin

show route-map

# match route-type

**Overview**

Use this command to add an external route-type match clause to a route map entry. Specify whether to match OSPF type-1 external routes or OSPF type-2 external routes.

An OSPF route matches the route map if its route type matches the route map's route type.

Each entry of a route map can only match against one route type in one match clause. If the route map entry already has a route type match clause, entering this command replaces that match clause with the new clause.

Use the **no** variant of this command to remove the route type match clause from the route map entry.

**Syntax**

```
match route-type external {type-1|type-2}
no match route-type external [type-1|type-2]
```

| Parameter | Description |
|---|---|
| type-1 | OSPF type-1 external routes. |
| type-2 | OSPF type-2 external routes. |

**Mode**

Route-map Configuration

**Usage**

Use the **match route-type external**command to match specific external route types. AS- external LSA is either Type-1 or Type-2. **external type-1** matches only Type 1 external routes, and **external type-2** matches only Type 2 external routes.

This command is valid for OSPF routes only.

**Example**

To add entry `10` to the route map called `mymap1`, which will process type-1 external routes, use the commands:

```
awplus# configure terminal
awplus(config)# route-map mymap1 permit 10
awplus(config-route-map)# match route-type external type-1
```

**Related commands**

match interface

match ip address

match ip next-hop

match tag

route-map

set metric-type

show route-map

# match tag

**Overview**

Use this command to add a tag match clause to a route map entry. Specify the route tag value to match.

An OSPF route matches the route map if it has been tagged with the route map's tag value. Routes can be tagged through OSPF commands or through another route map's set clause.

Each entry of a route map can only match against one tag in one match clause. If the route map entry already has a tag match clause, entering this command replaces that match clause with the new clause.

Use the **no** variant of this command to remove the tag match clause from the route map entry.

**Syntax**

```
match tag <0-4294967295>
no match tag [<0-4294967295>]
```

**Mode**

Route-map Configuration

**Usage**

This command is valid for OSPF routes only.

**Example**

To add entry 10 to the route map called `mymap1`, which will process routes that are tagged `100`, use the following commands:

```
awplus# configure terminal
awplus(config)# route-map mymap1 permit 10
awplus(config-route-map)# match tag 100
```

**Related commands**

match interface

match ip address

match ip next-hop

match route-type

route-map

set tag

show route-map

# route-map

**Overview** Use this command to configure a route map entry, and to specify whether the device will process or discard matching routes and BGP update messages.

The device uses a name to identify the route map, and a sequence number to identify each entry in the route map.

The **route-map** command puts you into route-map configuration mode. In this mode, you can use the following:

- one or more of the **match** commands to create match clauses. These specify what routes or update messages match the entry.
- one or more of the **set** commands to create set clauses. These change the attributes of matching routes or update messages.

Use the **no** variant of this command to delete a route map or to delete an entry from a route map.

**Syntax**

```
route-map <mapname> {deny|permit} <seq>
no route-map <mapname>
no route-map <mapname> {deny|permit} <seq>
```

| Parameter | Description |
|---|---|
| *<mapname>* | A name to identify the route map. |
| deny | The route map causes a routing process to discard matching routes or BGP update messages. |
| permit | The route map causes a routing process to use matching routes or BGP update messages. |
| *<seq>* | <1-65535> The sequence number of the entry. You can use this parameter to control the order of entries in this route map. |

**Mode** Global Configuration

**Usage notes** Route maps allow you to control and modify routing information by filtering routes and setting route attributes. You can apply route maps when the device:

- processes BGP update messages that it has received from a peer
- prepares BGP update messages to send to peers
- redistributes routes from one routing protocol into another
- redistributes static routes into routing protocols
- uses BGP route flap dampening

When a routing protocol passes a route or update message through a route map, it checks the entries in order of their sequence numbers, starting with the lowest numbered entry.

If it finds a match on a route map with an action of permit, then it applies any set clauses and accepts the route. Having found a match, the route is not compared against any further entries of the route map.

If it finds a match on a route map with an action of deny, it will discard the matching route.

If it does not find a match, it discards the route or update message. This means that route maps end with an implicit deny entry. To permit all non-matching routes or update messages, end your route map with an entry that has an action of **permit** and no match clause.

## Examples

To enter route-map mode for entry 1 of the route map called "route1", and then add a match and set clause to it, use the commands:

```
awplus# configure terminal
awplus(config)# route-map route1 permit 1
awplus(config-route-map)# match as-path 60
awplus(config-route-map)# set weight 70
```

To enter route-map mode for entry 2 of the route map called "route1", and then add a match and set clause to it, use the commands:

```
awplus# configure terminal
awplus(config)# route-map route1 permit 2
awplus(config-route-map)# match interface vlan2
awplus(config-route-map)# set metric 20
```

Note how the prompt changes when you go into route map configuration mode.

To make the device process non-matching routes instead of discarding them, add a command like the following one:

```
awplus(config)# route-map route1 permit 100
```

## Related commands

For BGP:

show route-map

bgp dampening

neighbor default-originate

neighbor route-map

neighbor unsuppress-map

network (BGP and BGP4+)

redistribute (into BGP or BGP4+)

show ip bgp route-map (BGP only)

For OSPF:

default-information originate

redistribute (OSPF)

For RIP:

redistribute (RIP)

# set aggregator

**Overview** Use this command to add an aggregator set clause to a route map entry.

When a BGP update message matches the route map entry, the device sets the update's aggregator attribute. The aggregator attribute specifies the AS and IP address of the device that performed the aggregation.

Use the **no** variant of this command to remove the set clause.

**Syntax**

```
set aggregator as <asnum> <ip-address>
no set aggregator as
```

| Parameter | Description |
|---|---|
| *<asnum>* | The AS number of the aggregator. |
| *<ip-address>* | The IP address of the aggregator. |

**Mode** Route-map Configuration

**Usage** An Autonomous System (AS) is a collection of networks under a common administration sharing a common routing strategy. It is subdivided by areas, and is assigned a unique 16- bit number. Use the **set aggregator** command to assign an AS number for the aggregator.

This command is valid for BGP update messages only.

**Example** To use entry 3 of the route map called `myroute` to set the aggregator attribute to 43 `10.10.0.3` in matching update messages, use the commands:

```
awplus# configure terminal
awplus(config)# route-map myroute permit 3
awplus(config-route-map)# set aggregator as 43 10.10.0.3
```

To remove all aggregator attributes for entry 3 of the route map called `myroute`, use the commands:

```
awplus# configure terminal
awplus(config)# route-map myroute permit 3
awplus(config-route-map)# no set aggregator as
```

**Related commands** route-map

show route-map

# set as-path

**Overview**

Use this command to add an AS path set clause to a route map entry.

When a BGP update message matches the route map entry, the device prepends the specified Autonomous System Number (ASN) or ASNs to the update's AS path attribute.

The AS path attribute is a list of the autonomous systems through which the announcement for the prefix has passed. As prefixes pass between autonomous systems, each autonomous system adds its ASN to the beginning of the list. This means that the AS path attribute can be used to make routing decisions.

Use the **no** variant of this command to remove the set clause.

**Syntax**

```
set as-path prepend <1-65535> [<1-65535>]...
no set as-path prepend [<1-65535> [<1-65535>]...]
```

| Parameter | Description |
|---|---|
| `prepend` | Prepends the autonomous system path. |
| *<1-65535>* | The number to prepend to the AS path. If you specify multiple ASNs, separate them with spaces. |

**Mode**

Route-map mode

**Usage notes**

Use the **set as-path** command to specify an autonomous system path. By specifying the length of the AS-Path, the device influences the best path selection by a neighbor. Use the `prepend` parameter with this command to prepend an AS path string to routes increasing the AS path length.

This command is valid for BGP update messages only.

**Example**

To use entry 3 of the route map called `myroute` to prepend ASN 8 and 24 to the AS path of matching update messages, use the commands:

```
awplus# configure terminal
awplus(config)# route-map myroute permit 3
awplus(config-route-map)# set as-path prepend 8 24
```

**Related commands**

match as-path

route-map

show route-map

**Command changes**

Added to AlliedWare Plus prior to 5.4.6-1

Version 5.4.7-2.1: BGP support added for IEx510, x550 series

Version 5.4.7-2.4: BGP support added for IE300 series

# set atomic-aggregate

**Overview** Use this command to add an atomic aggregate set clause to a route map entry.

When a BGP update message matches the route map entry, the device adds the atomic aggregate attribute to the update.

Use the **no** variant of this command to remove the set clause.

**Syntax**

```
set atomic-aggregate
no set atomic-aggregate
```

**Mode** Route-map Configuration

**Usage** This command is valid for BGP update messages only.

**Example** To use entry 3 of the route map called `rmap1` to add the atomic aggregator attribute to matching update messages, use the commands:

```
awplus# configure terminal
awplus(config)# route-map rmap1 permit 3
awplus(config-route-map)# set atomic-aggregate
```

**Related commands**

route-map

show route-map

# set comm-list delete

**Overview** Use this command to delete one or more communities from the community attribute of a BGP update message. Specify the communities to delete by specifying a community list. To create the community list, enter Global Configuration mode and use the ip community-list command.

When a BGP update message matches the route map entry, the device deletes the specified communities from the update's community attribute.

Use the **no** variant of this command to stop deleting the communities.

**Syntax**

```
set comm-list {<1-199>|<100-199>|<word>} delete
no set comm-list {<1-199>|<100-199>|<word>} delete
```

| Parameter | Description |
|---|---|
| *<1-99>* | Standard community-list number. |
| *<100-199>* | Expanded community-list number. |
| *<word>* | Name of the Community-list. |

**Mode** Route-map Configuration

**Usage** This command is valid for BGP update messages only.

**Example** To use entry 3 of the route map called `myroute` to delete the communities in community list 34 from matching update messages, use the commands:

```
awplus# configure terminal
awplus(config)# route-map myroute permit 3
awplus(config-route-map)# set comm-list 34 delete
```

**Related commands**

ip community-list

match community

route-map

set community

show route-map

# set community

**Overview** Use this command to add a community set clause to a route map entry.

When a BGP update message matches the route map entry, the device takes one of the following actions:

- changes the update's community attribute to the specified value or values, or
- adds the specified community value or values to the update's community attribute, if you specify the **additive** parameter after specifying another parameter. or
- removes the community attribute from the update, if you specify the **none** parameter

Use the **no** variant of this command to remove the set clause.

**Syntax**

```
set community {[<1-65535>][AA:NN] [internet] [local-AS]
[no-advertise] [no-export] [additive]}
```

```
no set community {[AA:NN] [internet] [local-AS] [no-advertise]
[no-export] [additive]}
```

```
set community none
```

```
no set community none
```

| Parameter | Description |
|---|---|
| *<1-65535>* | The AS number of the community as an integer not in AA:NN format. |
| *AA:NN* | The Autonomous System (AS) number of the community, in AA:NN format. AS numbers are assigned to the regional registries by the IANA (www.iana.org) and can be obtained from the registry in your region.<br>AA and NN are both integers from 1 to 65535.<br>AA is the AS number; NN is a value chosen by the ASN administrator. |
| `local-AS` | The community of routes that must not be advertised to external BGP peers (this includes peers in other members' Autonomous Systems inside a BGP confederation). |
| `internet` | The community of routes that can be advertised to all BGP peers. |
| `no-advertise` | The community of routes that must not be advertised to other BGP peers. |
| `no-export` | The community of routes that must not be advertised outside a BGP confederation boundary (a standalone Autonomous System that is not part of a confederation should be considered a confederation itself). |

| Parameter | Description |
|---|---|
| none | The device removes the community attribute from matching update messages. |
| additive | The device adds the specified community value to the update message's community attribute, instead of replacing the existing attribute. By default this parameter is not included, so the device replaces the existing attribute. |

**Mode**

Route-map Configuration

**Usage notes**

This command is valid for BGP update messages only.

**Examples**

To use entry 3 of the route map called `rmap1` to put matching routes into the no-advertise community, use the commands:

```
awplus# configure terminal
awplus(config)# route-map rmap1 permit 3
awplus(config-route-map)# set community no-advertise
```

To use entry 3 of the route map called `rmap1` to put matching routes into several communities, use the commands:

```
awplus# configure terminal
awplus(config)# route-map rmap1 permit 3
awplus(config-route-map)# set community 10:01 23:34 12:14
no-export
```

To use entry 3 of the route map called `rmap1` to put matching routes into a single AS community numbered `16384`, use the commands:

```
awplus# configure terminal
awplus(config)# route-map rmap1 permit 3
awplus(config-route-map)# set community 16384 no-export
```

**Related commands**

match community

route-map

set aggregator

set comm-list delete

set extcommunity

show route-map

**Command changes**

Added to AlliedWare Plus prior to 5.4.6-1

Version 5.4.7-2.1: BGP support added for IEx510, x550 series

Version 5.4.7-2.4: BGP support added for IE300 series

# set dampening

**Overview** Use this command to add a route flap dampening set clause to a route map entry.

Also use the route map by specifying it in the command bgp dampening route-map.

When a route matches the route map entry, the device enables route flap dampening for that route. If the set clause includes dampening parameter values, the device uses those values when dampening the matching route.

Use the **no** variant of this command to remove the set clause. This disables dampening on matching routes.

**Syntax**

```
set dampening
set dampening [<reachtime>]
set dampening <reachtime> [<reuse> <suppress> <maxsuppress>]
[<unreachtime>]
no set dampening
no set dampening [<reachtime>]
no set dampening <reachtime> [<reuse> <suppress> <maxsuppress>]
[<unreachtime>]
```

| Parameter | Description |
|---|---|
| *<reachtime>* | *<1-45>*<br>The time it takes, in minutes, for the route's instability penalty to halve if the route remains stable. The instability penalty is called the Figure of Merit (FoM). For example, if reachtime is 15, the FoM of a stable route halves over a 15 minute period, quarters over a 30 minute period, and so on.<br>The default is 15 minutes. |
| *<reuse>* | *<1-20000>*<br>The value that the instability penalty (FoM) must reach for the device to use a suppressed route again. Once a route is suppressed, it remains suppressed until its FoM falls below this threshold. Reuse must not exceed suppress. The default is 750. |
| *<suppress>* | *<1-20000>*<br>The instability penalty (FoM) at which the route is suppressed. Suppress must be greater than or equal to reuse.<br>If suppress is less than 1000, a route is suppressed when it becomes unreachable for the first time. The default is 2000. |

| Parameter | Description |
|---|---|
| *<maxsuppress>* | *<1-255>*<br>A number that is multiplied by reachtime to give the maximum time in minutes for which a suppressed route must remain stable in order to become unsuppressed. The lowest maxsuppress value of 1 gives a maximum suppression time of 1 x reachtime, and the highest maxsuppress value of 255 gives a maximum suppression time of 255 x reachtime.<br>For example, if reachtime is 15 and maxsuppress is 4, the route is unsuppressed after 60 minutes of stability even if its FoM still exceeds reuse. The default is 4. |
| *<unreachtime>* | *<1-45>*<br>The time it takes, in minutes, for the route's instability penalty to halve if the route remains unstable. The default is 15 minutes. |

**Mode** Route-map Configuration

**Usage** The **suppress** value must be greater than or equal to the **reuse** value.

Set the unreachability half-life time to be equal to, or greater than, reachability half-life time. The suppress-limit value must be greater than or equal to the reuse limit value.

This command is valid for BGP routes only.

**Example** To use entry 24 of the route map called R1 to enable dampening of matching routes and set the dampening parameters, use the commands:

```
configure terminal
route-map R1 permit 24
set dampening 20 333 534 30
```

**Related commands**

# set extcommunity

**Overview** Use this command to add an extended community set clause to a route map entry. A route map entry can have a route target extended community set clause, a site-of-origin extended community set clause, or both.

When a BGP update message matches the route map entry, the device sets the update's extended community attribute to the specified value or values.

Use the **no** variant of this command to remove the set clause.

**Syntax**

```
set extcommunity {rt|soo} <extcomm-number>
no set extcommunity {rt|soo} [<extcomm-number>]
```

| Parameter | Description |
|---|---|
| `rt` | Configure a route target extended community. This consists of routers that will receive matching routes. |
| `soo` | Configure a site-of-origin extended community. This consists of routers that will inject matching routes into BGP. |
| *<extcomm-number>* | The extended community number, in the format AA:NN or IPADD:N. |

**Mode** Route-map Configuration

**Usage notes** This command is valid for BGP update messages only.

**Examples** To use entry 3 of the route map called `rmap1` to set the route target extended community attribute to 06:01, use the commands:

```
awplus# configure terminal
awplus(config)# route-map rmap1 permit 3
awplus(config-route-map)# set extcommunity rt 06:01
```

To instead specify the extended community number in dotted decimal notation, use the command:

```
awplus# configure terminal
awplus(config)# route-map rmap1 permit 3
awplus(config-route-map)# set extcommunity rt 0.0.0.6:01
```

To use entry 3 of the route map called `rmap1` to set the site-of-origin extended community attribute to 06:01, use the commands:

```
awplus# configure terminal
awplus(config)# route-map rmap1 permit 3
awplus(config-route-map)# set extcommunity soo 06:01
```

To instead specify the extended community number in dotted decimal notation, use the command:

```
awplus# configure terminal
awplus(config)# route-map rmap1 permit 3
awplus(config-route-map)# set extcommunity soo 0.0.0.6:01
```

**Related commands**

match community

route-map

set comm-list delete

set community

show route-map

# set ip next-hop (route map)

**Overview**

Use this command to add a next-hop set clause to a route map entry.

When a route or BGP update message matches the route map entry, the device sets the route's next hop to the specified IP address.

Use the **no** variant of this command to remove the set clause.

**Syntax**

```
set ip next-hop <ip-address>
no set ip next-hop [<ip-address>]
```

| Parameter | Description |
|---|---|
| *<ip-address>* | The IP address of the next hop, entered in the form A.B.C.D. |

**Mode**

Route-map Configuration

**Usage notes**

Use this command to set the next-hop IP address to the routes.

This command is valid for:

- OSPF routes
- routes in BGP update messages
- RIP routes.

**Example**

To use entry 3 of the route map called `mymap` to give matching routes a next hop of 10.10.0.67, use the commands:

```
awplus# configure terminal
awplus(config)# route-map mymap permit 3
awplus(config-route-map)# set ip next-hop 10.10.0.67
```

**Related commands**

match ip next-hop

route-map

show route-map

# set ipv6 next-hop

**Overview** Use this command to set a next hop-address.

Use the **no** variant of this command to delete an entry.

**Syntax**

```
set ipv6 next-hop {<ipv6-addr-global>|local <ipv6-addr>}
no set ipv6 next-hop [<ipv6-addr-global>|local [<ipv6-addr>]]
```

| Parameter | Description |
|---|---|
| *<ipv6-addr-global>* | The IPv6 global address of next hop. The IPv6 address uses the format X:X::X:X. |
| `local` | Specifies that the address is local. |
| *<ipv6-addr>* | The IPv6 local address of next hop. The IPv6 address uses the format X:X::X:X. |

**Mode** Route-map Configuration

**Usage notes** Use this command to set the next-hop IPv6 address to the routes.

This command is valid only for BGP.

**Examples**

```
awplus# configure terminal
awplus(config)# route-map rmap1 permit 3
awplus(config-route-map)# set ipv6 next-hop local
fe80::203:47ff:fe97:66dc
awplus(config-route-map)# no set ipv6 next-hop
```

# set local-preference

**Overview**

This command changes the default local preference value.

The local preference indicates the BGP local preference path attribute when there are multiple paths to the same destination. The path with the higher preference is chosen.

Use this command to define the preference of a particular path. The preference is sent to all routers and access servers in the local autonomous system.

The **no** variant of this command reverts to the default setting.

**Syntax**

```
set local-preference <pref-value>
no set local-preference [<pref-value>]
```

| Parameter | Description |
|---|---|
| *<pref-value>* | <0-4294967295> Configure local preference value.<br>The default local preference value is 100. |

**Mode**

Route-map Configuration

**Examples**

```
awplus# configure terminal
awplus(config)# route-map rmap1 permit 3
awplus(config-route-map)# set local-preference 2345555
awplus# configure terminal
awplus(config)# router bgp 100
awplus(config-route-map)# no set local-preference
```

**Related commands**

For related Route Map commands:

route-map

show route-map

For related BGP commands:

bgp default local-preference (BGP only)

neighbor route-map

# set metric

**Overview** Use this command to add a metric set clause to a route map entry.

When a route or BGP update message matches the route map entry, the device takes one of the following actions:

- changes the metric (or for BGP, the MED attribute value) to the specified value, or
- adds or subtracts the specified value from the metric or MED attribute, if you specify + or - before the value (for example, to increase the metric by 2, enter +2)

Use the **no** variant of this command to remove the set clause.

**Syntax**

```
set metric {+<metric-value>|-<metric-value>|<metric-value>}
no set metric [+<metric-value>|-<metric-value>|<metric-value>]
```

| Parameter | Description |
|---|---|
| + | Increase the metric or MED attribute by the specified amount. |
| - | Decrease the metric or MED attribute by the specified amount. |
| *<metric-value>* | <0-4294967295><br>The new metric or MED attribute value, or the amount by which to increase or decrease the existing value. |

**Default** The default metric value for routes redistributed into OSPF and OSPFv3 is 20.

**Mode** Route-map Configuration

**Usage notes** For BGP, if you want the device to compare MED values in update messages from peers in different ASes, also enter the command bgp always-compare-med. You do not need to enter this command if you only want the device to compare MED values in update messages from peers in the same AS, because it always does.

This command is valid for:

- OSPF routes
- routes in BGP update messages
- RIP routes.

Note that defining the OSPF metric in a route map supersedes the metric defined using a redistribute (OSPF) or a redistribute (IPv6 OSPF) command. For more information, see the OSPFv3 Feature Overview and Configuration Guide and the OSPF Feature Overview and Configuration Guide.

**Examples**

To use entry 3 of the route map called "rmap1" to give matching routes a metric of 600, use the commands:

```
awplus# configure terminal
awplus(config)# route-map rmap1 permit 3
awplus(config-route-map)# set metric 600
```

To use entry 3 of the route map called "rmap1" to increase the metric of matching routes by 2, use the commands:

```
awplus# configure terminal
awplus(config)# route-map rmap1 permit 3
awplus(config-route-map)# set metric +2
```

**Related commands**

match metric

route-map

show route-map

# set metric-type

**Overview**

Use this command to add a metric-type set clause to a route map entry.

When a route matches the route map entry, the device sets its route type to the specified value.

Use the **no** variant of this command to remove the set clause.

**Syntax**

```
set metric-type {type-1|type-2}
no set metric-type [type-1|type-2]
```

| Parameter | Description |
|---|---|
| `type-1` | Redistribute matching routes into OSPF as type-1 external routes. |
| `type-2` | Redistribute matching routes into OSPF as type-2 external routes. |

**Mode**

Route-map Configuration

**Usage notes**

This command is valid for OSPF routes only.

**Example**

To use entry 3 of the route map called `rmap1` to redistribute matching routes into OSPF as type-1 external routes, use the commands:

```
awplus# configure terminal
awplus(config)# route-map rmap1 permit 3
awplus(config-route-map)# set metric-type 1
```

**Related commands**

default-information originate

redistribute (OSPF)

match route-type

route-map

show route-map

# set origin

**Overview** Use this command to add an origin set clause to a route map entry.

When a BGP update message matches the route map entry, the device sets its origin attribute to the specified value.

Use the **no** variant of this command to remove the set clause.

**Syntax**

```
set origin {egp|igp|incomplete}
no set origin [egp|igp|incomplete]
```

| Parameter | Description |
|---|---|
| egp | Learned from an exterior gateway protocol. |
| igp | Learned from a local interior gateway protocol. |
| incomplete | Of unknown heritage, for example a static route. |

**Mode** Route-map Configuration

**Usage** This command is valid for BGP update messages only.

**Example** To use entry 3 of the route map called `rmap1` to give matching update messages an origin of `egp`, use the commands:

```
awplus# configure terminal
awplus(config)# route-map rmap1 permit 3
awplus(config-route-map)# set origin egp
```

**Related commands**

match origin

route-map

show route-map

# set originator-id

**Overview** Use this command to add an originator ID set clause to a route map entry.

The originator ID is the router ID of the IBGP peer that first learned this route, either via an EBGP peer or by some other means such as importing it.

When a BGP update message matches the route map entry, the device sets its originator ID attribute to the specified value.

Use the **no** variant of this command to remove the set clause.

**Syntax**

```
set originator-id <ip-address>
no set originator-id [<ip-address>]
```

| Parameter | Description |
|---|---|
| *<ip-address>* | The IP address of the originator, entered in the form A.B.C.D. |

**Mode** Route-map Configuration

**Usage** This command is valid for BGP update messages only.

**Example** To use entry 3 of the route map called `rmap1` to give matching update messages an originator ID of `1.1.1.1`, use the commands:

```
awplus# configure terminal
awplus(config)# route-map rmap1 permit 3
awplus(config-route-map)# set originator-id 1.1.1.1
```

**Related commands**

route-map

show route-map

# set tag

**Overview**

Use this command to add a tag set clause to a route map entry.

When a route matches the route map entry, the device sets its tag to the specified value when it redistributes the route into OSPF.

Use the **no** variant of this command to remove the set clause.

**Syntax**

```
set tag <tag-value>
no set tag [<tag-value>]
```

| Parameter | Description |
|---|---|
| *<tag-value>* | <0-4294967295><br>Value to tag matching routes with. |

**Mode**

Route-map Configuration

**Usage notes**

This command is valid only when redistributing routes into OSPF.

**Example**

To use entry 3 of the route map called `rmap1` to tag matching routes with the number 6, use the commands:

```
awplus# configure terminal
awplus(config)# route-map rmap1 permit 3
awplus(config-route-map)# set tag 6
```

**Related commands**

default-information originate

redistribute (OSPF)

match tag

route-map

show route-map

# set weight

**Overview** Use this command to add a weight set clause to a route map entry.

The weight value assists in best path selection of BGP routes. It is stored with the route in the BGP routing table, but is not advertised to peers. When there are multiple routes with a common destination, the device uses the route with the highest weight value.

When a route matches the route map entry, the device sets its weight to the specified value.

Use the **no** variant of this command to remove the set clause.

**Syntax**

```
set weight <weight>
no set weight [<weight>]
```

| Parameter | Description |
|---|---|
| *<weight>* | *<0-4294967295>*<br>The weight value. |

**Mode** Route-map Configuration

**Usage** This command is valid for BGP routes only.

**Example** To use entry 3 of the route map called `rmap1` to give matching routes a weight of `60`, use the commands:

```
awplus# configure terminal
awplus(config)# route-map rmap1 permit 3
awplus(config-route-map)# set weight 60
```

**Related commands**

route-map

show route-map

# show route-map

**Overview** Use this command to display information about one or all route maps.

**Syntax** `show route-map <map-name>`

| Parameter | Description |
|---|---|
| *<map-name>* | A name to identify the route map. |

**Mode** User Exec and Privileged Exec

**Example** To display information about the route-map named `example-map`, use the command:

```
awplus# show route-map example-map
```

**Output** Figure 32-1: Example output from the **show route-map** command

```
route-map example-map, permit, sequence 1
  Match clauses:
    ip address prefix-list example-pref
  Set clauses:
    metric 100
route-map example-map, permit, sequence 200
  Match clauses:
  Set clauses:
```

**Related commands** route-map

# 33 Policy-based Routing Commands

## Introduction

**Overview**

This chapter provides an alphabetical reference of commands used to configure policy-based routing.

For more information, see the Policy-based Routing (PBR) Feature Overview and Configuration Guide.

**Command List**


- "application-decision" on page 1566
- "debug policy-based-routing" on page 1568
- "ip policy-route" on page 1569
- "ipv6 policy-route" on page 1571
- "policy-based-routing" on page 1573
- "policy-based-routing enable" on page 1574
- "show ip pbr route" on page 1575
- "show ipv6 pbr route" on page 1577
- "show pbr rules" on page 1579
- "show pbr rules brief" on page 1584

# application-decision

**Overview** Use this command to select which method is used for the application decision.

**Syntax**

```
application-decision {once-only|continuous}
```

| Parameter | Description |
|---|---|
| `once-only` | When a traffic flow reaches the PBR engine for the first time, whatever application has been set on that flow will be used to match against the PBR rules and a route selected. Subsequent updates to the flow's application will be ignored by the PBR engine. |
| `continuous` | Any time a traffic flow has its application updated by the DPI engine, the PBR engine will re-process the flow against all configured PBR rules, which may result in a new match and the traffic being directed over a different route than it was previously. |

**Default** Application determination is set to **continuous**.

**Mode** Policy-based Routing Configuration

**Usage notes** When using a DPI engine, traffic flows through the device are periodically assigned an application by the DPI engine. The application assignment is then used when matching against PBR rules. The DPI engine may change its decision about a traffic flow over time, as more packets from the flow are analyzed. This command determines how the PBR engine utilizes the application decision made by DPI.

When set to **once-only**, only the initial application decision made by the DPI engine will be used when matching against PBR routes, and subsequent updates will be ignored.

When set to **continuous**, if the DPI engine re-classifies a traffic flow under a different application, the flow will be re-processed by the PBR engine, and may therefore match against a different PBR rule and take a different route than it was previously.

Once-only is intended for use with DPI learning enabled. Refer to the SD-WAN Feature Overview and Configuration Guide for examples.

**Example** To prevent the PBR engine from re-matching a traffic flow whenever the application decision is changed, use the following commands:

```
awplus(config)# policy-based-routing
awplus(config-pbr)# application-decision once-only
```

To allow the PBR engine to re-match traffic flows against PBR rules when the application decision changes, use the following commands:

```
awplus(config)# policy-based-routing
awplus(config-pbr)# application-decision continuous
```

**Related commands**

ip policy-route

ipv6 policy-route

**Command changes**

Version 5.4.8-0.2: command added

# debug policy-based-routing

**Overview**

Use this command to enable policy-based routing debugging. This will cause messages containing detailed debugging information to be displayed and logged at the "debugging" level.

Use the **no** variant of this command to disable policy-based routing debugging.

**Syntax**

```
debug policy-based-routing
no debug policy-based-routing
```

**Default**

Policy-based routing debugging is disabled by default.

**Mode**

Privileged Exec

**Examples**

To enable policy-based routing debugging, use the command:

```
awplus# debug policy-based-routing
```

To disable policy-based routing debugging, use the command:

```
awplus# no debug policy-based-routing
```

**Related commands**

ip policy-route

ipv6 policy-route

policy-based-routing

show ip pbr route

show ipv6 pbr route

# ip policy-route

**Overview** Use this command to configure IP policy routes. These routes specify how the device will route traffic from specified applications and entities. You can specify the route's next-hop by specifying the egress interface, or by specifying the next-hop device's IP address (except on dynamic interfaces such as PPPoE). You can also list alternative next-hops to use if your first choice is down.

You can also specify the pseudo interface Null. Null should be the last nexthop specified, as this will drop packets when used as the nexthop.

Use the **no** variant of this command to remove a policy route.

**Syntax**

```
ip policy-route [<1-500>] [match <application-name>] [from
<source-entity>] [to <destination-entity>] nexthop
{<interface-list>|<ip-add-list>}
```

```
no ip policy-route <1-500>
```

| Parameter | Description |
|---|---|
| *<1-500>* | The policy route ID number.<br>If you do not specify an ID number, the device assigns the new policy route the next available number, in multiples of 10. For example, if the highest numbered policy route is 81, the next policy route would be given an ID of 90.<br>Policy routes are checked in order of ID number, starting with the lowest ID number. The device applies the policy route as soon as it finds a matching route; it does not check the remaining policy routes. |
| *<application-name>* | An application name. |
| *<source-entity>* | A source entity name. |
| *<destination-entity>* | A destination entity name. |
| *<interface-list>* | The name of the egress interface or interfaces. You can list up to 8 interfaces per policy route; the device sends the traffic out the first interface in the list that is up. |
| *<ip-add-list>* | The IP address of the next-hop. You can list up to 8 next-hop addresses per policy route; the device sends the traffic to the first address in the list that is reachable. Do not use this when the next-hop is on a dynamic interface (e.g. PPPoE); specify the interface name instead. |

**Default** No policy routes

**Mode** Policy-based Routing Configuration

**Usage notes**

You must specify at least one of the **match**, **from** or **to** parameters. Packets will be routed to the specified next-hop if they match the application, come from the source entity, and are destined for the destination entity.

Before creating a policy route, you need to create the application and entities that specify the traffic you want to route. To create an application, use the application command. To create entities, use the zone, network (zone), and host (network) commands. To see existing applications and entities, use the show application and show entity commands.

**Examples**

To create a policy route to route traffic that matches an application called "voice", comes from the entity called "inside", and is destined for the entity called "outside", use the following commands:

```
awplus# configure terminal
awplus(config)# policy-based-routing
awplus(config-pbr)# policy-based-routing enable
awplus(config-pbr)# ip policy-route 10 match voice from inside
to outside nexthop 10.37.236.65
```

To delete the policy route created above, use the following commands:

```
awplus# configure terminal
awplus(config)# policy-based-routing
awplus(config-pbr)# no ip policy-route 10
```

To route the above traffic via ppp0 if ppp0 is up, or ppp1 if ppp0 is down, use the following commands:

```
awplus# configure terminal
awplus(config)# policy-based-routing
awplus(config-pbr)# policy-based-routing enable
awplus(config-pbr)# ip policy-route 20 match voice from inside
to outside nexthop ppp0 ppp1
```

To delete the policy route created above, use the following commands:

```
awplus# configure terminal
awplus(config)# policy-based-routing
awplus(config-pbr)# no ip policy-route 20
```

**Related commands**

policy-based-routing

policy-based-routing enable

show application

show entity

show ip pbr route

**Command changes**

Version 5.4.8-0.2: number of routes increased, null interface added

# ipv6 policy-route

**Overview** Use this command to configure IPv6 policy routes. These routes specify how the device will route traffic from specified applications and entities. You can specify the route's next-hop by specifying the egress interface, or by specifying the next-hop device's IPv6 address (except on dynamic interfaces such as PPPoE). You can also list alternative next-hops to use if your first choice is down.

You can also specify the pseudo interface Null. Null should be the last nexthop specified, as this will drop packets when used as the nexthop.

Use the **no** variant of this command to remove a policy route.

**Syntax**

```
ipv6 policy-route [<1-500>] [match <application-name>] [from
<source-entity>] [to <destination-entity>] nexthop
{<interface-list>|<ipv6-add-list>}
```

```
no ipv6 policy-route <1-500>
```

| Parameter | Description |
|---|---|
| *<1-500>* | The policy route ID number.<br>If you do not specify an ID number, the device assigns the new policy route the next available number, in multiples of 10. For example, if the highest numbered policy route is 81, the next policy route would be given an ID of 90.<br>Policy routes are checked in order of ID number, starting with the lowest ID number. The device applies the policy route as soon as it finds a matching route; it does not check the remaining policy routes. |
| *<application-name>* | An application name. |
| *<source-entity>* | A source entity name. |
| *<destination-entity>* | A destination entity name. |
| *<interface-list>* | The name of the egress interface or interfaces. You can list up to 8 interfaces per policy route; the device sends the traffic out the first interface in the list that is up. |
| *<ipv6-add-list>* | The IPv6 address of the next-hop, specified in the form X:X::X:X. You can list up to 8 next-hop addresses per policy route; the device sends the traffic to the first address in the list that is reachable.<br>Do not use this when the next-hop is on a dynamic interface (e.g. PPPoE); specify the interface name instead. |

**Default** No policy routes

**Mode** Policy-based Routing Configuration

**Usage notes**

You must specify at least one of the **match**, **from** or **to** parameters. Packets will be routed to the specified next-hop if they match the application, come from the source entity, and are destined for the destination entity.

Before creating a policy route, you need to create the application and entities that specify the traffic you want to route. To create an application, use the application command. To create entities, use the zone, network (zone), and host (network) commands. To see existing applications and entities, use the show application and show entity commands.

**Examples**

To create a policy route to route traffic that matches an application called "voice", comes from the entity called "inside", and is destined for the entity called "outside", use the following commands:

```
awplus# configure terminal
awplus(config)# policy-based-routing
awplus(config-pbr)# policy-based-routing enable
awplus(config-pbr)# ipv6 policy-route 10 match voice from
inside to outside nexthop 2001:100::1
```

To delete the policy route created above, use the following commands:

```
awplus# configure terminal
awplus(config)# policy-based-routing
awplus(config-pbr)# no ipv6 policy-route 10
```

To route the above traffic via ppp0 if ppp0 is up, or ppp1 if ppp0 is down, use the following commands:

```
awplus# configure terminal
awplus(config)# policy-based-routing
awplus(config-pbr)# policy-based-routing enable
awplus(config-pbr)# ipv6 policy-route 20 match voice from
inside to outside nexthop ppp0 ppp1
```

To delete the policy route created above, use the following commands:

```
awplus# configure terminal
awplus(config)# policy-based-routing
awplus(config-pbr)# no ipv6 policy-route 20
```

**Related commands**

policy-based-routing

policy-based-routing enable

show application

show entity

show ipv6 pbr route

**Command changes**

Version 5.4.8-0.2: number of routes increased, null interface added

# policy-based-routing

**Overview**

Use this command to enter Policy-based-routing mode. Policy-based routing lets you determine how the device will route traffic from specified applications and entities.

Use the **no** variant of this command to remove the whole policy-based routing configuration.

**Syntax**

```
policy-based-routing
no policy-based-routing
```

**Mode**

Global configuration

**Usage**

Once you have entered policy-based-routing mode, use the policy-based-routing enable command to turn on policy-based routing, and the ip policy-route or ipv6 policy-route commands to create policy routes.

**Example**

To enter policy-based-routing mode, use the commands:

```
awplus# configure terminal
awplus(config)# policy-based-routing
awplus(config-pbr)#
```

**Related commands**

ip policy-route

ipv6 policy-route

policy-based-routing enable

# policy-based-routing enable

**Overview**

Use this command to enable policy-based routing (PBR). Policy-based routing lets you determine how the device will route traffic from specified applications and entities.

Use the **no** variant of this command to disable policy-based routing.

**Syntax**

```
policy-based-routing enable
no policy-based-routing enable
```

**Default**

Policy-based routing is disabled by default

**Mode**

Policy-based Routing Configuration

**Examples**

To enable policy-based routing use the following commands.

```
awplus# configure terminal
awplus(config)# policy-based-routing
awplus(config-pbr)# policy-based-routing enable
```

To disable policy-based routing use the following commands.

```
awplus# configure terminal
awplus(config)# policy-based-routing
awplus(config-pbr)# no policy-based-routing enable
```

**Related commands**

ip policy-route

ipv6 policy-route

# show ip pbr route

**Overview** Use this command to display the installed IPv4 routes for policy-based routing.

**Syntax**

```
show ip pbr route [<1-500>]
```

| Parameter | Description |
|---|---|
| *<1-500>* | The policy route ID. If you specify a policy route ID, the output only lists routes for that ID. If you do not specify an ID, the output also lists the conventional static and dynamic routes, in the table called "main". |

**Mode** User Exec and Privileged Exec

**Usage notes** If you do not specify a policy routeID, the output starts by listing the ordinary static and dynamic routes, in a table called "main".

**Example** To show all the IPv4 routes, use the following command:

```
awplus# show ip pbr route
```

**Output** Figure 33-1: Example output from **show ip pbr route**

```
awplus#show ip pbr route
Route table: main
    10.33.11.0/24 via 10.37.236.65, eth1
    10.37.236.64/27 is directly connected, eth1
    172.31.0.0/17 is directly connected, vlan4092
    192.168.1.0/24 is directly connected, vlan2

Route table: policy-route 10

Route table: policy-route 20
    default via 10.37.236.65, ppp0
```

If you do not specify a policy routeID, the output starts by listing the ordinary static and dynamic routes, in the route table called "main".

Then it lists the routes for each policy route.

For each route, the output lists the route's next-hop IP address and/or the next-hop interface.

**Example** To show only the routes for policy route 20, use the following command:

```
awplus# show ip pbr route 20
```

**Output**

Figure 33-2: Example output from **show ip pbr route** for a specified policy route

```
awplus#show ip pbr route 20

Route table: policy-route 20
    default via 10.37.236.65, ppp0
```

For each route, the output lists the route's next-hop IP address and/or the next-hop interface.

**Related commands**

ip policy-route

policy-based-routing

**Command changes**

Version 5.4.8-0.2: Policy route ID increased from 128 to 500

# show ipv6 pbr route

**Overview** Use this command to display the installed IPv6 routes for policy-based routing.

**Syntax**

```
show ipv6 pbr route [<1-128>]
```

| Parameter | Description |
|---|---|
| *<1-128>* | The policy route ID. If you specify a policy route ID, the output only lists routes for that ID. If you do not specify an ID, the output also lists the ordinary static and dynamic routes, in the table called "main". |

**Mode** User Exec and Privileged Exec

**Usage** If you do not specify a policy routeID, the output starts by listing the ordinary static and dynamic routes, in a table called "main".

**Example** To show all the IPv6 routes, use the following command:

```
awplus# show ipv6 pbr route
```

**Output** Figure 33-3: Example output from **show ipv6 pbr route**

```
awplus#show ipv6 pbr route
Route table: main
    2001:100::/64 dev eth1
    fe80::/64 dev eth1

Route table: policy-route 10

Route table: policy-route 20
    default via 2001:100::2, eth1
```

If you do not specify a policy routeID, the output starts by listing the ordinary static and dynamic routes, in the route table called "main".

Then it lists the routes for each policy route.

For each route, the output lists the route's next-hop IPv6 address and/or the next-hop interface.

**Example** To show only the routes for policy-route 20, use the following command:

```
awplus# show ip pbr route 20
```

**Output** Figure 33-4: Example output from **show ipv6 pbr route** for a specified policy route

```
awplus#show ipv6 pbr route 20

Route table: policy-route 20
    default via 2001:100::2, eth1
```

For each route, the output lists the route's next-hop IPv6 address and/or the next-hop interface.

**Related commands**

ipv6 policy-route

policy-based-routing

# show pbr rules

**Overview** Use this command to display the configured IPv4 and IPv6 policy routes. It also shows the validity of the policy routes.

**Syntax**

```
show pbr rules
show pbr rules <rule-id>
show pbr rules profile <profile-name>
show pbr rules group <group-name>
```

| Parameter | Description |
|---|---|
| *<rule-id>* | The policy route ID. If you specify a policy route ID, the output only lists configuration and status for this specified rule. |
| *<profile-name>* | The Link Health Monitoring profile name. If you specify an existing Link Health Monitoring performance profile name, the output only lists profile configuration for this specified profile. |
| *<group-name>* | The Link Health Monitoring group name. If you specify an existing Link Health Monitoring group name, the output only lists group configuration for this specified profile. |

**Mode** User Exec and Privileged Exec

**Example** To show information about the policy routes, use the following command:

```
awplus# show pbr rules
```

To show information about the policy route rule with the rule ID of '1', use the following command:

```
awplus# show pbr rules 1
```

To show information about the Link Health Monitoring profile with the profile name of 'profile1', use the following command:

```
awplus# show pbr rules profile profile1
```

To show information about the Link Health Monitoring group with the profile name of 'group1', use the following command:

```
awplus# show pbr rules group group1
```

**Output** Figure 33-5: Example output from **show pbr rules**

```
awplus#show pbr rules
Statistics:
-------------------------------------------------------------------
Route table usage: 1/500
Total number of configured PBR-rules = 1
-------------------------------------------------------------------

PBR-Rule 1
-------------------------------------------------------------------
Active:                 Yes
Match:                  sip
From:                   LAN
To:                     any
Profile:                PROFILE1
  latency bad above:    300 ms
  latency good below:   - ms
  jitter bad above:     - ms
  jitter good below:    - ms
  pktloss bad above:    - %
  pktloss good below:   - %
Group:                  GROUP1
  Member:               10
    next-hop:           172.16.10.1
    probe:              PROBE10
    latency:            401 ms
    jitter:             0 ms
    pktloss:            0.0 %
  Member:               20
    next-hop:           172.16.20.1
    probe:              PROBE20
    latency:            400 ms
    jitter:             0 ms
    pktloss:            0.0 %
Last Change:
  Current Nexthop:      172.16.10.1
  Previous Nexthop:     -
  Change Time:          22 Nov 2017 13:57:48
  Causes:               Rx probe 'PROBE10', latency (401>300) ms
  Decision:             only available link
Change Count:           1
```

Figure 33-6: Example output from **show pbr rules 1**

```
awplus#show pbr rules 1
PBR-Rule 1
-------------------------------------------------------------------
Active:                Yes
Match:                 sip
From:                  LAN
To:                    any
Profile:               PROFILE1
  latency bad above:   300 ms
  latency good below:  - ms
  jitter bad above:    - ms
  jitter good below:   - ms
  pktloss bad above:   - %
  pktloss good below:  - %
Group:                 GROUP1
  Member:              10
    next-hop:          172.16.10.1
    probe:             PROBE10
    latency:           401 ms
    jitter:            0 ms
    pktloss:           0.0 %
  Member:              20
    next-hop:          172.16.20.1
    probe:             PROBE20
    latency:           400 ms
    jitter:            0 ms
    pktloss:           0.0 %
Last Change:
  Current Nexthop:     172.16.10.1
  Previous Nexthop:    -
  Change Time:         22 Nov 2017 13:57:48
  Causes:              Rx probe 'PROBE10', latency (401>300) ms
  Decision:            only available link
Change Count:          1
```

Figure 33-7: Example output from **show pbr rules profile profile1**

```
awplus#show pbr rules profile profile1
Profile:               profile1
  latency bad above:   300 ms
  latency good below:  - ms
  jitter bad above:    - ms
  jitter good below:   - ms
  pktloss bad above:   - %
  pktloss good below:  - %
```

Figure 33-8: Example output from **show pbr rules group group1**

```
awplus#show pbr rules group group1
Group:                  group1
  Member:               10
    next-hop:           172.16.10.1
    probe:              PROBE10
    latency:            401 ms
    jitter:             0 ms
    pktloss:            0.0 %
  Member:               20
    next-hop:           172.16.20.1
    probe:              PROBE20
    latency:            400 ms
    jitter:             0 ms
    pktloss:            0.0 %
```

Table 33-1: Parameters in the output from **show pbr rules**

| Parameter | Description |
|---|---|
| `Total number of configured PBR-rules` | The number of PBR rules currently configured.<br>This includes both conventional PBR policy-routes and Link Health Monitoring IP policy-routes, regardless of whether the rules are valid or not. |
| `PBR-Rule` | The PBR rule ID which the following statistics and configuration are associated with. |
| `Active` | Whether the rule is active or not. |
| `Match` | The name of an application.<br>Packets will be routed to the specified next hop if they match this application, come from the source entity, and are destined for the destination entity. |
| `From` | The name of the source entity.<br>Packets will be routed to the specified next hop if they match the application, come from this source entity, and are destined for the destination entity. |
| `To` | The name of the destination entity.<br>Packets will be routed to the specified next hop if they match the application, come from the source entity, and are destined for this destination entity. |
| `Profile` | The name of the Link Health Monitoring profile associated with this Link Health Monitoring PBR policy-route. |
| `bad above, good below` | The configured threshold for this specific rule. There are fields for latency, jitter, and packet loss. If this field has a value of "-", then the threshold has not been configured. |
| `Group` | The name of the Link Health Monitoring group associated with this Link Health Monitoring PBR policy-route. |

Table 33-1: Parameters in the output from **show pbr rules** (cont.)

| Parameter | Description |
|---|---|
| `Member` | The ID of the Link Health Monitoring member associated with this Link Health Monitoring group. |
| `Nexthop` | The IPv4 or IPv6 address of the next-hop or the egress interface. There can be up to 8 next-hops per policy route. |
| `probe` | The Link Health Monitoring probe associated with the Link Health Monitoring group member. |
| `latency` | The latency of the probe associated with the Link Health Monitoring member. |
| `jitter` | The jitter of the probe associated with the Link Health Monitoring member. |
| `packet loss` | The packet loss of the probe associated with the Link Health Monitoring member. |
| `Current Nexthop` | The chosen nexthop for traffic matching the Link Health Monitoring PBR policy-route. |
| `Previous Nexthop` | The previously chosen nexthop prior to failover. If a failover hasn't occurred on this setup, there is no previous nexthop. This is indicated by "-". |
| `Change Time` | The time at which the current nexthop was chosen. This will change if a failover occurs, or at boot. |
| `Causes` | The event that caused the last failover. |
| `Decision` | The reason why the current nexthop was chosen. |
| `Change Count` | The number of times the chosen nexthop has changed. This counter will increment any time a link failover occurs. |

**Related commands**

ip policy-route

ipv6 policy-route

policy-based-routing

show ip pbr route

show ipv6 pbr route

**Command changes**

Version 5.4.8-0.2: new parameters for profiles and groups added

Version 5.4.8-1.1: up to 500 route table entries supported

# show pbr rules brief

**Overview** Use this command to show a summary of all PBR rules. It also indicates, by the presence or absence of the nexthop field, which nexthop to route to.

**Syntax** `show pbr rules brief`

**Mode** User Exec and Privileged Exec

**Example** To show information about the policy routes, use the following command:

```
awplus# show pbr rules brief
```

**Output** Figure 33-9: Example output from **show pbr rules brief**

```
awplus#show pbr rules brief
Policy based routing is enabled
Route table usage: 2/500
* - No route table available for the rule - see "show ip pbr
route"
Rule Match    From            To                Valid  Nexthop
-----------------------------------------------------------------
10   any      entities.any    entities.outside  Yes    10.10.20.2
20   udp      any             any               Yes    2001:100::2
```

Table 33-2: Parameters in the output from **show pbr rules brief**

| Parameter | Description |
|---|---|
| Rule | The policy route ID number.<br>Policy routes are checked in order of ID number, starting with the lowest ID number. The device applies the policy route as soon as it finds a matching route; it does not check the remaining policy routes. |
| Match | The name of an application.<br>Packets will be routed to the specified next hop if they match this application, come from the source entity, and are destined for the destination entity. |
| From | The name of the source entity.<br>Packets will be routed to the specified next hop if they match the application, come from this source entity, and are destined for the destination entity. |
| To | The name of the destination entity.<br>Packets will be routed to the specified next hop if they match the application, come from the source entity, and are destined for this destination entity. |

Table 33-2: Parameters in the output from **show pbr rules brief** (cont.)

| Parameter | Description |
|---|---|
| `Valid` | Whether the application and entities are valid. |
| `Nexthop` | The IPv4 or IPv6 address of the next-hop or the egress interface. There can be up to 8 next-hops per policy route. |

**Related commands**

show pbr rules

**Command changes**

Version 5.4.8-0.2: command added

Version 5.4.8-1.1: up to 500 route table entries supported

# 34 VRF-lite Commands

## Introduction

**Overview** This chapter provides an alphabetical reference of commands used to configure Virtual Routing and Forwarding Lite (VRF-lite). See the VRF Lite Feature Overview and Configuration Guide for more information and examples.

**Command List**


- "address-family" on page 1589
- "address-family ipv4 (RIP)" on page 1591
- "arp" on page 1592
- "arp opportunistic-nd" on page 1594
- "clear arp-cache" on page 1596
- "clear ip bgp * (BGP only)" on page 1598
- "clear ip bgp (IPv4) (BGP only)" on page 1600
- "clear ip rip route" on page 1602
- "crypto key pubkey-chain knownhosts" on page 1604
- "default-metric (RIP)" on page 1606
- "description (VRF)" on page 1607
- "distance (RIP)" on page 1608
- "distribute-list (RIP)" on page 1609
- "export map" on page 1610
- "fullupdate (RIP)" on page 1611
- "import map" on page 1612
- "ip route static inter-vrf" on page 1613
- "ip route" on page 1614
- "ip vrf" on page 1617

- "ip vrf forwarding" on page 1618
- "max-fib-routes (VRF)" on page 1619
- "max-static-routes (VRF)" on page 1621
- "neighbor next-hop-self" on page 1622
- "neighbor remote-as" on page 1625
- "neighbor password" on page 1628
- "network (RIP)" on page 1632
- "passive-interface (RIP)" on page 1634
- "ping" on page 1635
- "rd (route distinguisher)" on page 1637
- "redistribute (into BGP or BGP4+)" on page 1638
- "redistribute (OSPF)" on page 1640
- "redistribute (RIP)" on page 1642
- "route (RIP)" on page 1644
- "route-target" on page 1645
- "router ospf" on page 1647
- "router-id (VRF)" on page 1649
- "show arp" on page 1650
- "show crypto key pubkey-chain knownhosts" on page 1652
- "show ip bgp cidr-only (BGP only)" on page 1654
- "show ip bgp community (BGP only)" on page 1655
- "show ip bgp community-list (BGP only)" on page 1657
- "show ip bgp dampening (BGP only)" on page 1658
- "show ip bgp filter-list (BGP only)" on page 1660
- "show ip bgp inconsistent-as (BGP only)" on page 1661
- "show ip bgp longer-prefixes (BGP only)" on page 1662
- "show ip bgp prefix-list (BGP only)" on page 1663
- "show ip bgp quote-regexp (BGP only)" on page 1664
- "show ip bgp regexp (BGP only)" on page 1666
- "show ip bgp route-map (BGP only)" on page 1668
- "show ip bgp summary (BGP only)" on page 1669
- "show ip interface vrf" on page 1671
- "show ip rip vrf database" on page 1673
- "show ip rip vrf interface" on page 1674
- "show ip route" on page 1675

- "show ip route database" on page 1678
- "show ip route summary" on page 1681
- "show ip vrf" on page 1683
- "show ip vrf detail" on page 1684
- "show ip vrf interface" on page 1685
- "show running-config vrf" on page 1686
- "ssh" on page 1687
- "tcpdump" on page 1689
- "telnet" on page 1690
- "timers (RIP)" on page 1691
- "traceroute" on page 1693
- "version (RIP)" on page 1694

# address-family

**Overview** This command enters the IPv4 or IPv6 Address-Family Configuration command mode. In this mode you can configure address-family specific parameters.

When using VRF-lite, you can enter IPv4 Address Family Configuration mode for a specified VRF instance before configuring that instance.

**Syntax [BGP]**

```
address-family ipv4 [unicast]
no address-family ipv4 [unicast]
```

**Syntax (VRF-lite)**

```
address-family ipv4 [unicast|vrf <vrf-name>]
no address-family ipv4 [unicast|vrf <vrf-name>]
```

**Syntax [BGP4+]**

```
address-family ipv6 [unicast]
no address-family ipv6 [unicast]
```

| Parameter | Description |
|---|---|
| ipv4 | Configure parameters relating to the exchange of IPv4 prefixes. |
| ipv6 | Configure parameters relating to the exchange of IPv6 prefixes. |
| unicast | Configure parameters relating to the exchange of routes to unicast destinations. |
| vrf | Applies the command to the specified VRF instance. |
| *<vrf-name>* | The name of the VRF instance to enter IPv4 Address-Family mode for. |

**Mode [BGP]** Router Configuration

**Mode [BGP4+]** Router Configuration

**Usage notes** To leave the IPv4 or IPv6 Address Family Configuration mode, and return to the Router Configuration mode, use the exit-address-family command.

**Example [BGP]**

```
awplus# configure terminal
awplus(config)# router bgp 100
awplus(config-router)# neighbor 192.168.0.1 remote-as 100
awplus(config-router)# address-family ipv4 vrf
green
awplus(config-router-af)# neighbor 192.168.0.1 activate
awplus(config-router-af)# exit-address-family
awplus(config-router)#
```

**Example [BGP4+]**

```
awplus# configure terminal
awplus(config)# router bgp 100
awplus(config-router)# neighbor 2001:0db8:010d::1 remote-as 100
awplus(config-router)# address-family ipv6
awplus(config-router-af)# neighbor 2001:0db8:010d::1 activate
awplus(config-router-af)# exit-address-family
awplus(config-router)#
```

**Related commands**

exit-address-family

**Command changes**

Added to AlliedWare Plus prior to 5.4.6-1

Version 5.4.6-2.1: VRF-lite support added to BGP for AR-series products

Version 5.4.7-2.1: BGP support added for IEx510, x550 series

Version 5.4.7-2.4: BGP support added for IE300 series

# address-family ipv4 (RIP)

**Overview** This command enters the IPv4 address-family command mode. In this mode you can configure address-family specific parameters for a specific VRF (RIP) instance.

**Syntax**

```
address-family ipv4 vrf <vrf-name>
no address-family ipv4 vrf <vrf-name>
```

| Parameter | Description |
|---|---|
| `ipv4` | Configure parameters relating to the RIP exchange of IPv4 prefixes. |
| `vrf` | Apply this command to a VRF instance. |
| `<vrf-name>` | The name of the VRF instance. |

**Mode** Router Configuration

**Usage** To leave Address Family mode and return to Router Configuration mode, use the exit-address-family command.

**Example** In this example the address family "green" is entered, and then exited by using the exit-address-family command.

```
awplus# configure terminal
awplus(config)# router rip
awplus(config-router)# address-family ipv4 vrf green
awplus(config-router-af)# exit-address-family
awplus(config-router)#
```

**Related commands** exit-address-family

**Command changes** Version 5.4.6-2.1: VRF-lite support added.

# arp

**Overview** This command adds a static ARP entry to the ARP cache. This is typically used to add entries for hosts that do not support ARP or to speed up the address resolution function for a host. The ARP entry must not already exist. Use the **alias** parameter to allow your device to respond to ARP requests for this IP address.

If VRF-lite is configured, you can add ARP entries to either the global cache or for a specific VRF instance.

The **no** variant of this command removes the static ARP entry. Use the clear arp-cache command to remove the dynamic ARP entries in the ARP cache.

**Syntax**

```
arp <ip-addr> <mac-address> [<port-number>] [alias]
no arp <ip-addr>
```

**Syntax (VRF-lite)**

```
arp [vrf <vrf-name>] <ip-addr> <mac-address> [<port-number>]
[alias]
no arp [vrf <vrf-name>] <ip-addr>
```

| Parameter | Description |
|---|---|
| *<ip-addr>* | The IPv4 address of the device you are adding as a static ARP entry. |
| *<mac-address>* | The MAC address of the device you are adding as a static ARP entry, in hexadecimal notation with the format HHHH.HHHH.HHHH. |
| *<port-number>* | The port number associated with the IP address. Specify this when the IP address is part of a VLAN. |
| alias | Allows your device to respond to ARP requests for the IP address. Proxy ARP must be enabled on the interface before using this parameter. |
| vrf | Apply this command to a VRF instance. |
| *<vrf-name>* | The name of the VRF instance. |

**Mode** Global Configuration

**Examples** To add the IP address 10.10.10.9 with the MAC address 0010.2533.4655 into the ARP cache, and have your device respond to ARP requests for this address, use the commands:

```
awplus# configure terminal
awplus(config)# arp 10.10.10.9 0010.2355.4566 alias
```

**Example (VRF-lite)**

To apply the above example within a VRF instance called `red` use the following commands:

```
awplus# configure terminal
awplus(config)# arp vrf red 10.10.10.9 0010.2355.4566 alias
```

**Related commands**

clear arp-cache

ip proxy-arp

show arp

**Command changes**

Version 5.4.6-2.1: VRF-lite support added.

# arp opportunistic-nd

**Overview**

Use this command to enable opportunistic neighbor discovery for the global ARP cache. This command changes the behavior for unsolicited ARP packet forwarding on the device.

When using VRF-lite, you can use this command to enable opportunistic neighbor discovery for a named VRF instance.

Use the **no** variant of this command to disable opportunistic neighbor discovery for the global ARP cache.

**Syntax**

```
arp opportunistic-nd
no arp opportunistic-nd
```

**Syntax (VRF-lite)**

```
arp opportunistic-nd [vrf <vrf-name>]
no arp opportunistic-nd [vrf <vrf-name>]
```

| Parameter | Description |
|---|---|
| `vrf` | Apply this command to a VRF instance. |
| `<vrf-name>` | The name of the VRF instance. |

**Default**

Opportunistic neighbor discovery is disabled by default.

**Mode**

Global Configuration

**Usage notes**

When opportunistic neighbor discovery is enabled, the device will reply to any received unsolicited ARP packets (but not gratuitous ARP packets). The source MAC address for the unsolicited ARP packet is added to the ARP cache, so the device forwards the ARP packet. When opportunistic neighbor discovery is disabled, the source MAC address for the ARP packet is not added to the ARP cache, so the ARP packet is not forwarded by the device.

Note this command enables or disables opportunistic neighbor discovery for a VRF instance if the **vrf** parameter and an instance name are applied. If a VRF instance is not specified, then opportunistic neighbor discovery is enabled or disabled for device ports configured for IPv4.

**Examples**

To enable opportunistic neighbor discovery for the global ARP cache, enter:

```
awplus# configure terminal
awplus(config)# arp opportunistic-nd
```

To disable opportunistic neighbor discovery for the global ARP cache, enter:

```
awplus# configure terminal
awplus(config)# no arp opportunistic-nd
```

**Example (VRF-lite)**

To enable opportunistic neighbor discovery for the VRF instance 'blue', enter:

```
awplus# configure terminal
awplus(config)# arp opportunistic-nd vrf blue
```

To disable opportunistic neighbor discovery for the VRF instance 'blue', enter:

```
awplus# configure terminal
awplus(config)# no arp opportunistic-nd vrf blue
```

**Related commands**

ipv6 opportunistic-nd

show arp

show running-config interface

**Command changes**

Version 5.4.6-2.1: VRF-lite support added.

# clear arp-cache

**Overview** This command deletes dynamic ARP entries from the ARP cache. You can optionally specify the IPv4 address of an ARP entry to be cleared from the ARP cache.

When running VRF-lite, this command deletes dynamic ARP entries either from the ARP cache of a specific VRF instance, or from the ARP cache of the Global VRF instance. To delete all ARP entries from both the Global VRF instance and all VRF instances, use the command with no parameters. You can optionally specify the IPv4 address for the VRF instance to clear an ARP entry from the ARP cache.

**Syntax**

```
clear arp-cache [<ip-address>]
```

**Syntax (VRF-lite)**

```
clear arp-cache [vrf <vrf-name>|global] [<ip-address>]
```

| Parameter | Description |
|---|---|
| *<ip-address>* | Specifies a specific IPv4 address for a VRF instance whose entries are to be cleared from the ARP cache. |
| `global` | When VRF-lite is configured, apply this command to the global routing and forwarding table. |
| `vrf` | Apply this command to the specified VRF instance. |
| *<vrf-name>* | The VRF instance name |

**Mode** Privileged Exec

**Usage notes** To display the entries in the ARP cache, use the show arp command. To remove static ARP entries, use the no variant of the arp command.

**Example** To clear all dynamic ARP entries, use the command:

```
awplus# clear arp-cache
```

To clear all dynamic ARP entries associated with the IPv4 address 192.168.1.1, use the command:

```
awplus# clear arp-cache 192.168.1.1
```

**Example (VRF-lite)** To clear the dynamic ARP entries from the VRF instance named blue, use the commands:

```
awplus# clear arp-cache vrf blue
```

To clear the dynamic ARP entries from the VRF instance named blue with the IPv4 address 192.168.1.1, use the commands:

```
awplus# clear arp-cache vrf blue 192.168.1.1
```

When running VRF-lite, to clear the dynamic ARP entries from the global VRF-lite and all VRF instances, use the command:

```
awplus# clear arp-cache
```

**Related commands**

arp

show arp

# clear ip bgp * (BGP only)

**Overview** Use this command to reset all BGP connections, either by fully resetting sessions or by performing soft resets.

If VRF-lite is configured, you can reset BGP connections for all VRF instances or for a specified VRF instance.

**Syntax**

```
clear ip bgp *
clear ip bgp * in
clear ip bgp * out
clear ip bgp * soft [in|out]
clear ip bgp * in [prefix-filter]
```

**Syntax (VRF-lite)**

```
clear ip bgp * [vrf <vrf-name>]
clear ip bgp * [vrf <vrf-name>] in
clear ip bgp * [vrf <vrf-name>] out
clear ip bgp * [vrf <vrf-name>] soft [in|out]
clear ip bgp * in [prefix-filter]
```

| Parameter | Description |
|---|---|
| * | Clears all BGP peers. |
| in | Indicates that incoming advertised routes will be cleared. |
| prefix-filter | Specifies that a prefix-list will be sent, by the ORF mechanism, to those neighbors with which the ORF capability has been negotiated. The neighbors will be triggered to resend updates, which match the prefix-list filter, to the local router. The local router will then perform a soft reconfiguration. |
| out | Indicates that outgoing advertised routes will be cleared. |
| soft in | Soft inbound reset causes the neighbors to resend all their updates to the local device, without resetting the connection or clearing the entries in the local device. So, the local device stores new updates, and uses them to systematically replace existing table entries. This process can use a considerable amount of memory. |
| soft out | Soft outbound reset causes the device to simply resend all its updates to the specified neighbor(s), without resetting the connection, or clearing table entries. |
| vrf | Applies the command to the specified VRF instance. |
| *<vrf-name>* | The name of the VRF instance. |

**Mode** Privileged Exec

**Examples**

To clear all BGP peers, use the command:

```
awplus# clear ip bgp *
```

**Example (VRF-lite)**

To clear all BGP peers in VRF instance red, use the command:

```
awplus# clear ip bgp * vrf red
```

To clear all outbound BGP peers in VRF instance red, use the command:

```
awplus# clear ip bgp * out vrf red
```

**Command changes**

Added to AlliedWare Plus prior to 5.4.6-1

Version 5.4.6-2.1: VRF-lite support added to BGP for AR-series products

Version 5.4.7-2.1: BGP support added for IEx510, x550 series

Version 5.4.7-2.4: BGP support added for IE300 series

# clear ip bgp (IPv4) (BGP only)

**Overview** Use this command to reset the IPv4 BGP connection to the peer specified by the IP address. When VRF-lite is configured, you can apply this command to a specific VRF instance.

**Syntax [BGP]**

```
clear ip bgp <ipv4-addr> [in [prefix-filter]|out|soft [in|out]]
```

**Syntax (VRF-lite)**

```
clear ip bgp <ipv4-address> [vrf <vrf-name>] [in|out|soft
[in|out]]
```

| Parameter | Description |
|---|---|
| `<ipv4-addr>` | Specifies the IPv4 address of the neighbor whose connection is to be reset, entered in the form A.B.C.D. |
| `in` | Indicates that incoming advertised routes will be cleared. |
| `prefix-filter` | Specifies that a prefix-list will be sent, by the ORF mechanism, to those neighbors with which the ORF capability has been negotiated. The neighbors will be triggered to resend updates, which match the prefix-list filter, to the local router. The local router will then perform a soft reconfiguration. |
| `out` | Indicates that outgoing advertised routes will be cleared. |
| `soft in` | Soft inbound reset causes the neighbors to resend all their updates to the local switch, without resetting the connection or clearing the entries in the local switch. So, the local switch stores new updates, and uses them to systematically replace existing table entries. This process can use a considerable amount of memory. |
| `soft out` | Soft outbound reset causes the switch to simply resend all its updates to the specified neighbor(s), without resetting the connection, or clearing table entries. |
| `vrf` | Applies the command to the specified VRF instance. |
| `<vrf-name>` | The name of the VRF instance. |

**Mode [BGP]** Privileged Exec

**Examples [BGP]** To clear the BGP connection to the peer at IPv4 address 192.168.1.1 and clear all incoming routes, use the following command:

```
awplus# clear ip bgp 192.168.1.1 in
```

To apply the above example to clear the BGP connection to the peer at IP address 192.0.2.11 for the VRF instance blue, use the following commands:

```
awplus# clear ip bgp 192.0.2.11 vrf blue in
```

**Command changes** Added to AlliedWare Plus prior to 5.4.6-1

Version 5.4.6-2.1: VRF-lite support added to BGP for AR-series products

Version 5.4.7-2.1: BGP support added for IEx510, x550 series

Version 5.4.7-2.4: BGP support added for IE300 series

# clear ip rip route

**Overview** Use this command to clear specific data from the RIP routing table.

**Syntax**

```
clear ip rip route <ip-dest-network/prefix-length>
clear ip rip route
{static|connected|rip|ospf|bgp|invalid-routes|all}
```

**Syntax (VRF-lite)**

```
clear ip rip [vrf <vrf-name>] route
<ip-dest-network/prefix-length>
clear ip rip [vrf <vrf-name>] route
{static|connected|rip|ospf|bgp|invalid-routes|all}
```

| Parameter | Description |
|---|---|
| `vrf` | Apply this command to a VRF instance. |
| *<vrf-name>* | The name of the VRF instance. |
| *<ip-dest-network/prefix-length>* | Removes entries which exactly match this destination address from RIP routing table. Enter the IP address and prefix length of the destination network. |
| `static` | Removes static entries from the RIP routing table. |
| `connected` | Removes entries for connected routes from the RIP routing table. |
| `rip` | Removes only RIP routes from the RIP routing table. |
| `ospf` | Removes only OSPF routes from the RIP routing table. |
| `bgp` | Removes only BGP routes from the RIP routing table. |
| `invalid-routes` | Removes routes with metric 16 immediately. Otherwise, these routes are not removed until RIP times out the route after 2 minutes. |
| `all` | Clears the entire RIP routing table. |

**Mode** Privileged Exec

**Usage notes** Using this command with the **all** parameter clears the RIP table of all the routes.

**Examples** To clear the route 10.0.0.0/8 from the RIP routing table, use the following command:

```
awplus# clear ip rip route 10.0.0.0/8
```

**Examples (VRF-lite)** To clear RIP routes associated with the VRF instance 'red' for OSPF routes, use the following command:

```
awplus# clear ip rip vrf red route ospf
```

To clear the route 10.0.0.0/8 from the RIP routing table for the VRF instance 'red', use the following command:

```
awplus# clear ip rip vrf red route 10.0.0.0/8
```

**Command changes**

Version 5.4.6-2.1: VRF-lite support added.

# crypto key pubkey-chain knownhosts

**Overview** This command adds a public key of the specified SSH server to the known host database on your device. The SSH client on your device uses this public key to verify the remote SSH server.

The key is retrieved from the server. Before adding a key to this database, check that the key sent to you is correct.

If the server's key changes, or if your SSH client does not have the public key of the remote SSH server, then your SSH client will inform you that the public key of the server is unknown or altered.

The **no** variant of this command deletes the public key of the specified SSH server from the known host database on your device.

**Syntax**

```
crypto key pubkey-chain knownhosts [ip|ipv6] <hostname>
[rsa|dsa|rsa1]
```

```
no crypto key pubkey-chain knownhosts <1-65535>
```

**Syntax (VRF-lite)**

```
crypto key pubkey-chain knownhosts [vrf <vrf-name>]
[ip|ipv6] <hostname> [rsa|dsa|rsa1]
```

```
no crypto key pubkey-chain knownhosts [vrf <vrf-name>]
<1-65535>
```

| Parameter | Description |
|---|---|
| `vrf` | Apply this command to the specified VRF instance. |
| *<vrf-name>* | The VRF instance name |
| `ip` | Keyword used prior to specifying an IPv4 address |
| `ipv6` | Keyword used prior to specifying an IPv6 address |
| *<hostname>* | IPv4/IPv6 address or hostname of a remote server in the format `a.b.c.d` for an IPv4 address, or in the format `x:x::x:x` for an IPv6 address. |
| `rsa` | Specify the RSA public key of the server to be added to the known host database. |
| `dsa` | Specify the DSA public key of the server to be added to the known host database. |
| `rsa1` | Specify the SSHv1 public key of the server to be added to the know host database. |
| *<1-65535>* | Specify a key identifier when removing a key using the **no** parameter. |

**Default** If no cryptography algorithm is specified, then **rsa** is used as the default cryptography algorithm.

**Mode** Privilege Exec

**Usage notes**

This command adds a public key of the specified SSH server to the known host database on the device. The key is retrieved from the server. The remote SSH server is verified by using this public key. The user is requested to check the key is correct before adding it to the database.

If the remote server's host key is changed, or if the device does not have the public key of the remote server, then SSH clients will inform the user that the public key of the server is altered or unknown.

**Examples**

To add the RSA host key of the remote SSH host IPv4 address `192.0.2.11` to the known host database, use the command:

```
awplus# crypto key pubkey-chain knownhosts 192.0.2.11
```

To delete the second entry in the known host database, use the command:

```
awplus# no crypto key pubkey-chain knownhosts 2
```

**Examples (VRF-lite)**

To add the RSA host key of the remote SSH host IPv4 address `192.0.2.11` in VRF `red` to the known host database, use the command:

```
awplus# crypto key pubkey-chain knownhosts vrf red 192.0.2.11
```

To delete the second entry in the known host database in VRF `red`, use the command:

```
awplus# no crypto key pubkey-chain knownhosts vrf red 2
```

**Validation Commands**

show crypto key pubkey-chain knownhosts

**Command changes**

Version 5.4.6-2.1: VRF-lite support added.

# default-metric (RIP)

**Overview**

Use this command to specify the metrics to be assigned to redistributed RIP routes.

Use the **no** variant of this command to reset the RIP metric back to its default (1).

**Syntax**

```
default-metric <metric>
no default-metric [<metric>]
```

| Parameter | Description |
|---|---|
| *<metric>* | <1-16> Specifies the value of the default metric. |

**Default**

By default, the RIP metric value is set to 1.

**Mode**

RIP Router Configuration or RIP Router Address Family Configuration for a VRF instance.

**Usage notes**

This command is used with the redistribute (RIP) command to make the routing protocol use the specified metric value for all redistributed routes, regardless of the original protocol that the route has been redistributed from.

**Examples**

This example assigns the cost of 10 to the routes that are redistributed into RIP.

```
awplus# configure terminal
awplus(config)# router rip
awplus(config-router)# default-metric 10
awplus(config-router)# redistribute ospf
awplus(config-router)# redistribute connected
```

**Example (VRF-lite)**

This example assigns the cost of 10 to the routes which are redistributed into RIP for the VRF instance blue.

```
awplus# configure terminal
awplus(config)# router rip
awplus(config-router)# address family ipv4 vrf blue
awplus(config-router-af)# default-metric 10
awplus(config-router-af)# redistribute ospf
awplus(config-router-af)# redistribute connected
```

**Related commands**

redistribute (RIP)

**Command changes**

Version 5.4.6-2.1: VRF-lite support added.

# description (VRF)

**Overview**

Use this command to add text that describes a specific VRF instance. Descriptions can be up to 80 characters long.

The **no** variant of this command removes the description of the selected VRF instance.

**Syntax**

```
description <descriptive-text>
no description
```

| Parameter | Description |
|---|---|
| *<descriptive-text>* | A string of up to 80 characters that describes the VRF instance. |

**Mode**

VRF Configuration

**Example**

To add the description for a VRF instance named blue, use the following commands:

```
awplus# config terminal
awplus(config)# ip vrf blue
awplus(config-vrf)# description the text description of vrf
blue
```

**Related commands**

show ip vrf

**Command changes**

Version 5.4.6-2.1: VRF-lite support added.

# distance (RIP)

**Overview**

This command sets the administrative distance for RIP routes. Your device uses this value to select between two or more routes to the same destination obtained from two different routing protocols. The route with the smallest administrative distance value is added to the Forwarding Information Base (FIB). For more information, see the Route Selection Feature Overview and Configuration Guide.

The **no** variant of this command sets the administrative distance for the RIP route to the default of 120.

**Syntax**

```
distance <1-255> [<ip-addr/prefix-length>]
no distance [<1-255>] [<ip-addr/prefix-length>]
```

| Parameter | Description |
|---|---|
| *<1-255>* | The administrative distance value you are setting for this RIP route. |
| *<ip-addr/prefix-length>* | The network IP address and prefix-length that you are changing the administrative distance for. |

**Mode**

RIP Router Configuration or RIP Router Address Family Configuration for a VRF instance.

**Examples**

To set the administrative distance to 8 for the RIP routes within the 10.0.0.0/8 network, use the commands:

```
awplus# configure terminal
awplus(config)# router rip
awplus(config-router)# distance 8 10.0.0.0/8
```

To set the administrative distance to the default of 120 for the RIP routes within the 10.0.0.0/8 network, use the commands:

```
awplus# configure terminal
awplus(config)# router rip
awplus(config-router)# no distance 8 10.0.0.0/8
```

**Example (VRF-lite)**

This example assigns a cost of 10 to the routes for the VRF instance blue, when redistributed into RIP.

```
awplus# configure terminal
awplus(config)# router rip
awplus(config-router)# address family ipv4 blue
awplus(config-router-af)# distance 10
```

**Command changes**

Version 5.4.6-2.1: VRF-lite support added.

# distribute-list (RIP)

**Overview** Use this command to filter incoming or outgoing route updates using the prefix-list.

When running VRF-lite, this command can be applied to a specific VRF instance.

Use the **no** variant of this command to disable this feature.

**Syntax**

```
distribute-list prefix <prefix-list> {in|out} [<interface>]
no distribute-list prefix <prefix-list> {in|out}  [<interface>]
```

| Parameter | Description |
|---|---|
| `prefix` | Filter prefixes in routing updates. |
| `<prefix-list>` | Specifies the name of the IPv4 prefix-list to use. |
| `in` | Filter incoming routing updates. |
| `out` | Filter outgoing routing updates. |
| `<interface>` | The interface on which distribute-list applies. For instance: `vlan2` |

**Default** Disabled

**Mode** RIP Router Configuration or RIP Router Address Family Configuration for a VRF instance.

**Usage notes** Filter out incoming or outgoing route updates using prefix-list. If you do not specify the name of the interface, the filter will be applied to all interfaces.

**Examples** In this example the following commands are used to apply a prefix list called myfilter to filter incoming routing updates in `vlan2`

```
awplus# configure terminal
awplus(config)# router rip
awplus(config-router)# distribute-list prefix myfilter in vlan2
```

**Example (VRF-lite)** This example applies the commands of the previous example, but to a specific VRF named blue:

```
awplus# configure terminal
awplus(config)# router rip
awplus(config-router)# address-family ipv4 vrf blue
awplus(config-router-af)# distribute-list prefix myfilter in
vlan2
```

**Command changes** Version 5.4.6-2.1: VRF-lite support added.

# export map

**Overview**

This command associates a route map with a specific VRF instance. It provides a finer control over the routes that are exported out of a VRF instance by the **route-target** command. Note, however, that this command does not replace the need for a route-target export in the VRF configuration.

The **no** variant of this command disables the capability to export route map entries for a specified VRF instance.

**Syntax**

```
export map <route-map>
no export map
```

| Parameter | Description |
|---|---|
| *<route-map>* | The route-map name. |

**Mode**

VRF Configuration

**Usage notes**

Use this command to export route-map entries in VRF configuration mode.

**Example**

To export the route map named routemap2 for the VRF instance named blue, use the following commands:

```
awplus# config terminal
awplus(config)# ip vrf blue
awplus(config-vrf)# export map routemap2
```

**Related commands**

import map

**Command changes**

Version 5.4.6-2.1: VRF-lite support added.

# fullupdate (RIP)

**Overview**

Use this command to specify which routes RIP should advertise when performing a triggered update. By default, when a triggered update is sent, RIP will only advertise those routes that have changed since the last update. When **fullupdate** is configured, the device advertises the full RIP route table in outgoing triggered updates, including routes that have not changed. This enables faster convergence times, or allows inter-operation with legacy network equipment, but at the expense of larger update messages.

Use the **no** variant of this command to disable this feature.

**Syntax**

```
fullupdate
no fullupdate
```

**Default**

By default this feature is disabled.

**Mode**

RIP Router Configuration or RIP Router Address Family Configuration for a VRF instance.

**Usage (VRF-lite)**

If VRF-lite is configured, you can apply this command for either the global routing environment, or to a specific VRF instance.

**Example**

To enable the fullupdate (RIP) function, use the commands:

```
awplus# configure terminal
awplus(config)# router rip
awplus(config-router)# fullupdate
```

**Example (VRF-lite)**

To enable the full update (RIP) function on the VRF instance named 'blue', use the commands:

```
awplus# configure terminal
awplus(config)# router rip
awplus(config-router)# address-family ipv4 vrf blue
awplus(config-router-af)# fullupdate
```

**Command changes**

Version 5.4.6-2.1: VRF-lite support added.

# import map

**Overview**

The import map command associates a route map with a specific VRF instance. The import map command does not replace the need for a route-target import in the VRF configuration. It provides a finer control over the routes imported into a VRF instance by the **route-target** command.

The **no** variant of this command disables the capability to import route map entries for a specified VRF instance.

**Syntax**

```
import map <route-map>
no import map
```

| Parameter | Description |
|---|---|
| *<route-map>* | The route-map name. |

**Mode**

VRF Configuration

**Usage notes**

Use this command to import route-map entries into the specified VRF instance.

**Example**

To import the route map named `routemap2` for the VRF instance named `blue`, use the following commands:

```
awplus# config terminal
awplus(config)# ip vrf blue
awplus(config-vrf)# import map routemap2
```

**Related commands**

export map

**Command changes**

Version 5.4.6-2.1: VRF-lite support added.

# ip route static inter-vrf

**Overview**

Applying this command enables static inter-VRF routing. Note that static inter-VRF routing must be enabled before you can use the **ip route** command to create a static inter-VRF route.

The **no** variant of this command disables static inter-VRF routing.

**Syntax**

```
ip route static inter-vrf
no ip route static inter-vrf
```

**Mode**

VRF Configuration

**Default**

Static inter-VRF routing is enabled.

**Example**

To enable static inter-VRF routing, use the following commands:

```
awplus# config terminal
awplus(config)# ip route static inter-vrf
```

**Related commands**

ip route

show ip route

**Command changes**

Version 5.4.6-2.1: VRF-lite support added.

# ip route

**Overview**

This command adds a static route to the Routing Information Base (RIB). If this route is the best route for the destination, then your device adds it to the Forwarding Information Base (FIB). Your device uses the FIB to advertise routes to neighbors and forward packets.

When using VRF (Virtual Routing and Forwarding), you can use this command to configure a static inter-VRF route to a destination network that is reachable by a remote gateway located in a different VRF instance. Note that to apply the command in this way, the ip route static inter-vrf command must be in enabled (its default condition). For more information about VRF, see the VRF Feature Overview and Configuration Guide and the VRF-lite Commands chapter.

The **no** variant of this command removes the static route from the RIB and FIB.

**Syntax**

```
ip route <subnet&mask> {<gateway-ip>|<interface>} [<distance>]
no ip route <subnet&mask> {<gateway-ip>|<interface>}
[<distance>]
```

**Syntax (VRF-lite)**

```
ip route [vrf <vrf-name>] <subnet&mask> [<gateway-ip>]
[<interface>] [<distance>]
no ip route [vrf <vrf-name>] <subnet&mask> [<gateway-ip>]
[<interface>] [<distance>]
```

| Parameter | Description |
|---|---|
| *<subnet&mask>* | The IPv4 address of the destination subnet defined using either a prefix length or a separate mask specified in one of the following formats:<br>• The IPv4 subnet address in dotted decimal notation followed by the subnet mask, also in dotted decimal notation.<br>• The IPv4 subnet address in dotted decimal notation, followed by a forward slash, then the prefix length. |
| *<gateway-ip>* | The IPv4 address of the gateway device. |
| *<interface>* | The interface that connects your device to the network. Enter the name of the VLAN or its VID. You can also enter 'null' as an interface. Specify a 'null' interface to add a null or blackhole route to the switch.<br>The gateway IP address or the interface is required if VRF-lite is not configured.<br>If VRF-lite is configured: When adding a static intra-VRF route, you must specify either the gateway IP address or the interface.<br>When adding a static inter-VRF route, you must specify both the gateway IP address and the interface. |
| *<distance>* | The administrative distance for the static route in the range 1 to 255. Static routes by default have an administrative distance of 1, which gives them the highest priority possible. |

| Parameter | Description |
|---|---|
| `vrf` | Applies the command to the specified VRF instance. |
| *<vrf-name>* | The name of the VRF instance to enter IPv4 Address-Family mode for. |

**Mode** Global Configuration

**Default** The default administrative distance for a static route is 1.

**Usage notes** You can use administrative distance to determine which routes take priority over other routes.

Specify a 'Null' interface to add a null or blackhole route to the switch. A null or blackhole route is a routing table entry that does not forward packets, so any packets sent to it are dropped.

**Examples** To add the destination 192.168.3.0 with the mask 255.255.255.0 as a static route available through the device at 10.10.0.2 with the default administrative distance, use the commands:

```
awplus# configure terminal
awplus(config)# ip route 192.168.3.0 255.255.255.0 10.10.0.2
```

To remove the destination 192.168.3.0 with the mask 255.255.255.0 as a static route available through the device at 10.10.0.2 with the default administrative distance, use the commands:

```
awplus# configure terminal
awplus(config)# no ip route 192.168.3.0 255.255.255.0 10.10.0.2
```

To specify a null or blackhole route 192.168.4.0/24, so packets forwarded to this route are dropped, use the commands:

```
awplus# configure terminal
awplus(config)# ip route 192.168.4.0/24 null
```

To add the destination 192.168.3.0 with the mask 255.255.255.0 as a static route available through the device at 10.10.0.2 with an administrative distance of 128, use the commands:

```
awplus# configure terminal
awplus(config)# ip route 192.168.3.0 255.255.255.0 10.10.0.2
128
```

**Examples (VRF-lite)** To create a static route from source VRF instance red, to the subnet 192.168.50.0/24 with a next hop of 192.168.20.6, use the following commands for static intra-VRF routing configuration:

```
awplus# configure terminal
awplus(config)# ip route vrf red 192.168.50.0/24 192.168.20.6
```

To remove a static route from source VRF red, to the subnet 192.168.50.0/24 with a next hop of 192.168.20.6, use the following commands for static intra-VRF routing configuration:

```
awplus# configure terminal
awplus(config)# no ip route vrf red 192.168.50.0/24
192.168.20.6
```

To create a static route from source VRF red, to the subnet 192.168.50.0/24 with a next hop of 192.168.20.6 via vlan10, use the following commands for static inter-VRF routing configuration:

```
awplus# configure terminal
awplus(config)# ip route vrf red 192.168.50.0/24 192.168.20.6
vlan10
```

**Related commands**

show ip route

show ip route database

**Command changes**

Version 5.4.6-2.1: VRF-lite support added.

# ip vrf

**Overview** This command creates a VRF instance and specifies its unique name. You can also optionally specify a VRF ID. If you do not specify the VRF ID, a unique ID will automatically be created and assigned to the VRF instance.

The **no** variant of this command removes a selected VRF instance. All interfaces previously belonging to the removed instance are then returned to the global routing and forwarding environment.

**Syntax**

```
ip vrf <vrf-name> [<vrf-inst-id>]
no ip vrf <vrf-name> [<vrf-inst-id>]
```

| Parameter | Description |
|---|---|
| *<vrf-name>* | The name of the VRF instance. |
| *<vrf-inst-id>* | The ID of the VRF instance, a number in the range 1 to 8. |

**Mode** Global Configuration

**Default** Static inter-VRF routing is enabled

**Example** To create a VRF instance named `vrf blue` and assign it the ID number 2, use the following commands:

```
awplus# config terminal
awplus(config)# ip vrf blue 2
```

**Command changes** Version 5.4.6-2.1: On AR Series devices: VRF-lite support added

Version 5.5.0-0.1: On SBx908 GEN2 and x950 Series devices: **vrf-inst-id** parameter range increased to 600.

# ip vrf forwarding

**Overview** This command associates a VRF instance with an interface.

The **no** variant of this command disassociates the VRF instance from its interface.

**Syntax**

```
ip vrf forwarding <vrf-name>
no ip vrf <vrf-name>
```

| Parameter | Description |
|---|---|
| *<vrf-name>* | The name of the VRF instance. |

**Mode** Interface Configuration

**Default** The default for an interface is the global routing table.

**Examples** For LAN interfaces, to associate the VRF instance named `blue` with the VLAN interface `vlan-admin`, use the following commands:

```
awplus# config terminal
awplus(config)# interface vlan-admin
awplus(config-if)# ip vrf forwarding blue
```

**Related commands** show ip vrf

show ip vrf detail

**Command changes** Version 5.4.6-2.1: VRF-lite support added.

# max-fib-routes (VRF)

**Overview** This command now enables you to control the maximum number of FIB routes configured for a VRF instance. It operates by providing parameters that enable you to configure preset maximums and warning message thresholds.

***NOTE:*** *This command applies to a user-defined VRF instance; to set the max-fib-routes for the Global VRF instance use the max-fib-routes command. For static routes use the max-static-routes command for the Global VRF instance and the max-static-routes (VRF) command for a user-defined VRF instance.*

Use the **no** variant of this command to set the maximum number of FIB routes to the default of 4294967294 FIB routes.

**Syntax**

```
max-fib-routes <1-4294967294> [<1-100>|warning-only]
no max-fib-routes
```

| Parameter | Description |
|---|---|
| `max-fib-routes` | The maximum number of routes that can be stored in Forwarding Information dataBase for either the Global VRF or a VRF instance. |
| *<1-4294967294>* | The allowable configurable range for setting the maximum number of FIB-routes. |
| *<1-100>* | This parameter enables you to optionally apply a percentage value. This percentage will be based on the maximum number of FIB routes you have specified. This will cause a warning message to appear when your routes reach your specified percentage value. Routes can continue to be added until your configured maximum value is reached. |
| `warning-only` | This parameter enables you to optionally apply a warning message. If you set this option a warning message will appear if your maximum configured value configured. Routes can continue to be added until your switch reaches either the maximum capacity value of 4294967294, or a practical system limit. |

**Mode** VRF Configuration

**Default** Sets the maximum number of dynamic routes to 4294967294 and no warning threshold.

**Examples** To set the maximum number of dynamic routes to 2000 and warning threshold of 75% on VRF instance blue, use the commands:

```
awplus# config terminal
awplus(config)# ip vrf blue
awplus(config-vrf)# max-fib-routes 2000 75
```

**Related commands**

max-fib-routes

show ip route

**Command changes**

Version 5.4.6-2.1: VRF-lite support added.

# max-static-routes (VRF)

**Overview**

Use this command to set the maximum number of static routes (excluding FIB—Forwarding Information Base routes) for VRF instances. A limit of 1000 static routes can be assigned to each individual VRF instance. For example you can assign 800 static routes to the Global VRF, then also assign 600 static routes to VRF instance Blue, and a further 600 routes to VRF instance Green.

***NOTE:*** *This command applies to a user-defined VRF instance; to set the max-static-routes for the Global VRF instance use the max-static-routes command. For FIB routes use the max-fib-routes command for the Global VRF instance and the max-fib-routes (VRF) command for a user-defined VRF instance.*

Use the **no** variant of this command to reset the maximum number of static routes to the default value of 1000.

**Syntax**

```
max-static-routes <1-1000>
no max-static-routes
```

**Default**

The default number of static routes is the maximum number of static routes (1000).

**Mode**

VRF Configuration

**Example**

To assign 200 static routes to VRF instance Blue, use the following commands:

```
awplus# configure terminal
awplus(config)# ip vrf blue
awplus(condig-vrf)# max-static-routes 200
```

***NOTE:*** *Static routes are applied before adding routes to the RIB (Routing Information Base). Therefore, rejected static routes will not appear in the running config.*

**Related commands**

max-fib-routes (VRF)

**Command changes**

Version 5.4.6-2.1: VRF-lite support added.

# neighbor next-hop-self

**Overview** Use this command to configure the BGP or BGP4+ router as the next hop for a BGP or BGP4+ speaking neighbor or peer group.

Use the **no** variant of this command to disable this feature.

**Syntax**

```
neighbor <neighborid> next-hop-self
no neighbor <neighborid> next-hop-self
```

| Parameter | Description | |
|---|---|---|
| *<neighborid>* | {*<ip-address>* \| *<ipv6-addr>* \| *<peer-group>*} | |
| | *<ip-address>* | Specify the address of an IPv4 BGP neighbor, in dotted decimal notation A.B.C.D. |
| | *<ipv6-addr>* | Specify the address of an IPv6 BGP4+ neighbor, entered in hexadecimal in the format X:X::X:X. |
| | *<peer-group>* | Enter the name of an existing peer-group. For information on how to create peer groups, refer to the neighbor peer-group (add a neighbor) command, and neighbor route-map command. When this parameter is used with this command, the command applies on all peers in the specified group. |

**Mode [BGP]** Router Configuration or IPv4 Address Family Configuration

**Mode [BGP4+]** IPv6 Address Family Configuration

**Usage notes** This command allows a BGP or BGP4+ router to change the next hop information that is sent to the iBGP peer. The next hop information is set to the IP address of the interface used to communicate with the neighbor.

This command can be run for a specific VRF instance.

**Examples [BGP]**

```
awplus# configure terminal
awplus(config)# router bgp 10
awplus(config-router)# neighbor 10.10.0.72 next-hop-self
awplus# configure terminal
awplus(config)# router bgp 10
awplus(config-router)# no neighbor 10.10.0.72 next-hop-self
awplus# configure terminal
awplus(config)# router bgp 10
awplus(config-router)# address-family ipv4
awplus(config-router)# neighbor 10.10.0.72 next-hop-self
awplus# configure terminal
awplus(config)# router bgp 10
awplus(config-router)# address-family ipv4
awplus(config-router)# no neighbor 10.10.0.72 next-hop-self
awplus# configure terminal
awplus(config)# router bgp 10
awplus(config-router)# neighbor group1 peer-group
awplus(config-router)# neighbor 10.10.10.72 remote-as 10
awplus(config-router)# neighbor 10.10.10.72 peer-group group1
awplus(config-router)# neighbor group1 next-hop-self
awplus# configure terminal
awplus(config)# router bgp 10
awplus(config-router)# no neighbor group1 next-hop-self
```

**Examples [BGP4+]**

```
awplus# configure terminal
awplus(config)# router bgp 10
awplus(config-router)# address-family ipv6
awplus(config-router-af)# neighbor 2001:0db8:010d::1
next-hop-self
awplus# configure terminal
awplus(config)# router bgp 10
awplus(config-router)# address-family ipv6
awplus(config-router-af)# no neighbor 2001:0db8:010d::1
next-hop-self
awplus# configure terminal
awplus(config)# router bgp 10
awplus(config-router)# neighbor group1 peer-group
awplus(config-router)# neighbor 2001:0db8:010d::1 remote-as 10
awplus(config-router)# address-family ipv6
awplus(config-router-af)# neighbor 2001:0db8:010d::1
peer-group group1
awplus(config-router-af)# neighbor group1 next-hop-self
awplus# configure terminal
awplus(config)# router bgp 10
awplus(config-router)# address-family ipv6
awplus(config-router-af)# no neighbor group1 next-hop-self
```

**Related commands**

neighbor peer-group (add a neighbor)

neighbor route-map

**Command changes**

Added to AlliedWare Plus prior to 5.4.6-1

Version 5.4.7-2.1: BGP support added for IEx510, x550 series

Version 5.4.7-2.4: BGP support added for IE300 series

# neighbor remote-as

**Overview** Use this command to configure an internal or external BGP or BGP4+ (iBGP or eBGP) peering relationship with another router.

Use the **no** variant of this command to remove a previously configured BGP or BGP4+ peering relationship.

**Syntax**

```
neighbor <neighborid> remote-as <as-number>
no neighbor <neighborid> remote-as <as-number>
```

**Syntax (VRF- lite)**

```
neighbor <neighborid> remote-as <as-number> [global|vrf
<vrf-name>]
no neighbor <neighborid> remote-as <as-number>
```

| Parameter | Description | |
|---|---|---|
| *<neighborid>* | {*<ip-address>* \| *ipv6-addr>* \| *<peer-group>*} | |
| | *<ip-address>* | Specify the address of an IPv4 BGP neighbor, in dotted decimal notation A.B.C.D. |
| | *<ipv6-addr>* | Specify the address of an IPv6 BGP4+ neighbor, entered in hexadecimal in the format X:X::X:X. |
| | *<peer-group>* | Enter the name of an existing peer-group. For information on how to create peer groups, refer to the neighbor peer-group (add a neighbor) command, and neighbor route-map command. When this parameter is used with this command, the command applies on all peers in the specified group. |
| *<as-number>* | *<1-4294967295>* Neighbor's Autonomous System (AS) number. | |
| global | Specify that the remote neighbor exists locally within the device, in the global routing domain | |
| vrf | Specify that the remote neighbor exists locally within the device, in the specified VRF instance. | |
| *<vrf-name>* | The name of the VRF instance. | |

**Mode [BGP]** Router Configuration or IPv4 Address Family Configuration

**Mode [BGP4+]** Router Configuration

**Usage notes** This command is used to configure iBGP and eBGP peering relationships with other BGP or BGP4+ neighbors. A peer-group support of this command is configured only after creating a specific peer-group. Use the **no** variant of this command to remove a previously configured BGP peering relationship.

The **vrf** and **global** parameters are used to create internal 'loopback' BGP connections within the device between two VRF instances. This is used to leak BGP routes between a named VRF instance and the global routing instance. This requires BGP neighbors to be configured in both the global routing instance and in the named VRF instance.

**Examples [BGP]**

To configure a BGP peering relationship from the neighbor with the IPv4 address 10.10.0.73 with another router:

```
awplus# configure terminal
awplus(config)# router bgp 10
awplus(config-router)# neighbor 10.10.0.73 remote-as 10
```

To remove a configured BGP peering relationship from the neighbor with the IPv4 address 10.10.0.73 from another router:

```
awplus# configure terminal
awplus(config)# router bgp 10
awplus(config-router)# no neighbor 10.10.0.73 remote-as 10
```

To configure a BGP peering relationship from the neighbor with the peer group named group1 with another router:

```
awplus# configure terminal
awplus(config)# router bgp 10
awplus(config-router)# neighbor group1 peer-group
awplus(config-router)# neighbor 10.10.10.1 remote-as 10
awplus(config-router)# neighbor 10.10.10.1 peer-group group1
awplus(config-router)# neighbor group1 remote-as 10
```

To remove a configured BGP peering relationship from the neighbor with the peer group named group1 with another router:

```
awplus# configure terminal
awplus(config)# router bgp 10
awplus(config-router)# no neighbor group1 remote-as 10
```

**Examples [BGP4+]**

To configure a BGP4+ peering relationship with another router:

```
awplus# configure terminal
awplus(config)# router bgp 11
awplus(config-router)# neighbor 2001:0db8:010d::1 remote-as 345
```

To remove a configured BGP4+ peering relationship from another router:

```
awplus# configure terminal
awplus(config)# router bgp 11
awplus(config-router)# no neighbor 2001:0db8:010d::1 remote-as
345
```

To configure a BGP4+ peering relationship from the neighbor with the peer group named group1 with another router:

```
awplus# configure terminal
awplus(config)# router bgp 10
awplus(config-router)# neighbor group1 peer-group
awplus(config-router)# neighbor 2001:0db8:010d::1 remote-as 10
awplus(config-router)# address-family ipv6
awplus(config-router-af)# neighbor 2001:0db8:010d::1
peer-group group1
awplus(config-router-af)# exit
awplus(config-router)# neighbor group1 remote-as 10
```

To remove a configured BGP4+ peering relationship from the neighbor with the peer group named group1 with another router:

```
awplus# configure terminal
awplus(config)# router bgp 10
awplus(config-router)# no neighbor group1 remote-as 10
```

**Command changes**

Added to AlliedWare Plus prior to 5.4.6-1

Version 5.4.6-2.1: VRF-lite support added to BGP for AR-series products

Version 5.4.7-2.1: BGP support added for IEx510, x550 series

Version 5.4.7-2.4: BGP support added for IE300 series

# neighbor password

**Overview** Use this command to enable MD5 authentication on a TCP connection between BGP and BGP4+ neighbors. No authentication is applied by default. To setup authentication for the session, you must first apply authentication on each connected peer for the session.

Use the **no** variant of this command to disable this function.

**Syntax [BGP]**

```
neighbor {<ip-address>|<peer-group-name>} password <password>
no neighbor {<ip-address>|<peer-group-name>} password
[<password>]
```

**Syntax [BGP4+]**

```
neighbor {<ipv6-addr>|<peer-group-name>} password <password>
no neighbor {<ipv6-addr>|<peer-group-name>} password
[<password>]
```

| Parameter | Description |
|---|---|
| *<ip-address>* | Specifies the IP address of the BGP neighbor, in A.B.C.D format. |
| *<ipv6-addr>* | Specifies the IPv6 address of the BGP4+ neighbor, entered in hexadecimal in the format X:X::X:X. |
| *<peer-group-name>* | Name of an existing peer-group. When this parameter is used with this command, the command applies on all peers in the specified group. |
| *<password>* | An alphanumeric string of characters to be used as password. |

**Default** No authentication is applied by default.

**Mode [BGP]** Router Configuration or IPv4 Address Family Configuration

**Mode [BGP4+]** Router Configuration

**Usage notes** When using the *<peer-group-name>* parameter with this command (to apply this command to all peers in the group), see the related commands neighbor peer-group (add a neighbor) and neighbor route-map for information about how to create peer groups first.

**Examples [BGP]** This example specifies the encryption type and the password 'manager' for the neighbor `10.10.10.1`:

```
awplus# configure terminal
awplus(config)# router bgp 10
awplus(config-router)# neighbor 10.10.10.1 password manager
```

This example removes the password set for the neighbor `10.10.10.1`:

```
awplus# configure terminal
awplus(config)# router bgp 10
awplus(config-router)# no neighbor 10.10.10.1 password
```

This example specifies the encryption type and the password 'manager' for the neighbor peer group named 'group1':

```
awplus# configure terminal
awplus(config)# router bgp 10
awplus(config-router)# neighbor group1 peer-group
awplus(config-router)# neighbor 10.10.10.1 remote-as 10
awplus(config-router)# neighbor 10.10.10.1 peer-group group1
awplus(config-router)# neighbor group1 password manager
```

This example removes the password set for the neighbor peer group named `group1`:

```
awplus# configure terminal
awplus(config)# router bgp 10
awplus(config-router)# no neighbor group1 password
```

**Examples (VRF-lite)**

This example specifies the password ('manager') for the neighbor peer group named 'group1' for an IPv4 address-family VRF instance name 'red', and router bgp 10:

```
awplus# configure terminal
awplus(config)# router bgp 10
awplus(config-router)# address-family ipv4 vrf red
awplus(config-router-af)# neighbor 10.10.10.1 password manager
```

This example removes the password ('manager') for the neighbor peer group named 'group1' for an IPv4 address-family, VRF instance name 'red', and router bgp 10:

```
awplus# configure terminal
awplus(config)# router bgp 10
awplus(config-router)# address-family ipv4 vrf red
awplus(config-router-af)# no neighbor 10.10.10.1 password
manager
```

This example specifies the password ('manager') for the neighbor peer group named 'group1' for an IPv4 address-family, VRF instance name 'red', and router bgp 10:

```
awplus# configure terminal
awplus(config)# router bgp 10
awplus(config-router)# neighbor group1 peer-group
awplus(config-router)# neighbor 10.10.10.1 remote-as 10
awplus(config-router)# neighbor 10.10.10.1 peer-group group1
awplus(config-router)# address-family ipv4 vrf red
awplus(config-router-af)# neighbor group1 password manager
```

**Examples [BGP4+]**

This example specifies the encryption type and the password 'manager' for the neighbor `2001:0db8:010d::1`:

```
awplus# configure terminal
awplus(config)# router bgp 10
awplus(config-router)# neighbor password manager
2001:0db8:010d::1
```

This example removes the password set for the neighbor `2001:0db8:010d::1`:

```
awplus# configure terminal
awplus(config)# router bgp 10
awplus(config-router)# no neighbor password 2001:0db8:010d::1
```

This example specifies the encryption type and the password 'manager' for the neighbor peer group named `group1`:

```
awplus# configure terminal
awplus(config)# router bgp 10
awplus(config-router)# neighbor group1 peer-group
awplus(config-router)# neighbor  remote-as 102001:0db8:010d::1
awplus(config-router)# address-family ipv6
awplus(config-router-af)# neighbor peer-group group1
2001:0db8:010d::1
awplus(config-router-af)# exit
awplus(config-router)# neighbor group1 password manager
```

This example removes the password set for the neighbor peer group named 'group1':

```
awplus# configure terminal
awplus(config)# router bgp 10
awplus(config-router)# no neighbor group1 password
```

**Related commands**

neighbor peer-group (add a neighbor)

neighbor route-map

**Command changes**

Added to AlliedWare Plus prior to 5.4.6-1

Version 5.4.6-2.1: VRF-lite support added to BGP for AR-series products

Version 5.4.7-2.1: BGP support added for IEx510, x550 series

Version 5.4.7-2.4: BGP support added for IE300 series

# network (RIP)

**Overview** Use this command to activate the transmission of RIP routing information on the defined network.

Use the **no** variant of this command to remove the specified network or VLAN as one that runs RIP.

**Syntax**

```
network {<network-address>[/<subnet-mask>]|<vlan-name>}
no network {<network-address>[/<subnet-mask>]|<vlan-name>}
```

| Parameter | Description |
|---|---|
| *<network-address>* [*/<subnet-mask>*] | Specifies the network address to run RIP. Entering a subnet mask (or prefix length) for the network address is optional. Where no mask is entered, the device will attempt to apply a mask that is appropriate to the class (A, B, or C) of the address entered, e.g. an IP address of 10.0.0.0 will have a prefix length of 8 applied to it. |
| *<vlan-name>* | Specify a VLAN name with up to 32 alphanumeric characters to run RIP. |

**Default** Disabled

**Mode** RIP Router Configuration or RIP Router Address Family Configuration for a VRF instance.

**Usage notes** Use this command to specify networks, or VLANs, to which routing updates will be sent and received. The connected routes corresponding to the specified network, or VLANs, will be automatically advertised in RIP updates. RIP updates will be sent and received within the specified network or VLAN.

When running VRF-lite, this command can be applied to a VRF instance.

**Example** Use the following commands to activate RIP routing updates on network 172.16.20.0/24:

```
awplus# configure terminal
awplus(config)# router rip
awplus(config-router)# network 172.16.20.0/24
```

**Example (VRF-lite)** To activate RIP routing updates on vlan3 for VRF instance 'blue'.

```
awplus# configure terminal
awplus(config)# router rip
awplus(config-router)# address-family ipv4 vrf blue
awplus(config-router-af)# network vlan3
```

**Related commands**

show ip rip

show running-config

clear ip rip route

**Command changes**

Version 5.4.6-2.1: VRF-lite support added.

# passive-interface (RIP)

**Overview**

Use this command to block RIP broadcasts on the interface.

Use the **no** variant of this command to disable this function.

**Syntax**

```
passive-interface <interface>
no passive-interface <interface>
```

| Parameter | Description |
|---|---|
| *<interface>* | Specifies the interface name. |

**Default**

Disabled

**Mode**

RIP Router Configuration or RIP Router Address Family Configuration for a VRF instance.

**Example**

Use the following commands to block RIP broadcasts on vlan20:

```
awplus# configure terminal
awplus(config)# router rip
awplus(config-router)# passive-interface vlan20
```

**Example (VRF-lite)**

To apply this above example to a specific VRF instance named 'green', use the following commands:

```
awplus# configure terminal
awplus(config)# router rip
awplus(config-router)# address-family ipv4 vrf green
awplus(config-router-af)# passive-interface vlan20
```

**Related commands**

show ip rip

**Command changes**

Version 5.4.6-2.1: VRF-lite support added.

# ping

**Overview** This command sends a query to another IPv4 host (send Echo Request messages).

**Syntax**

```
ping [ip] <host> [broadcast] [df-bit {yes|no}] [interval
<0-128>] [pattern <hex-data-pattern>] [repeat
{<1-2147483647>|continuous}] [size <36-18024>] [source
<ip-addr>] [timeout <1-65535>] [tos <0-255>]
```

**Syntax (VRF-lite)**

```
ping [vrf <vrf-name>] [ip] <host> [broadcast] [df-bit {yes|no}]
[interval <0-128>] [pattern <hex-data-pattern>] [repeat
{<1-2147483647>|continuous}] [size <36-18024>] [source
<ip-addr>] [timeout <1-65535>] [tos <0-255>]
```

| Parameter | Description |
|---|---|
| *<host>* | The destination IP address or hostname. |
| `broadcast` | Allow pinging of a broadcast address. |
| `df-bit` | Enable or disable the do-not-fragment bit in the IP header. |
| `interval` *<0-128>* | Specify the time interval in seconds between sending ping packets. The default is 1. You can use decimal places to specify fractions of a second. For example, to ping every millisecond, set the interval to 0.001. |
| `pattern` *<hex-data-pattern>* | Specify the hex data pattern. |
| `repeat` | Specify the number of ping packets to send. |
| *<1-2147483647>* | Specify repeat count. The default is 5. |
| `continuous` | Continuous ping |
| `size` *<36-18024>* | The number of data bytes to send, excluding the 8 byte ICMP header. The default is 56 (64 ICMP data bytes). |
| `source` *<ip-addr>* | The IP address of a configured IP interface to use as the source in the IP header of the ping packet. |
| `timeout` *<1-65535>* | The time in seconds to wait for echo replies if the ARP entry is present, before reporting that no reply was received. If no ARP entry is present, it does not wait. |
| `tos` *<0-255>* | The value of the type of service in the IP header. |
| `vrf` | Apply the command to the specified VRF instance. |
| *<vrf-name>* | The name of the VRF instance. |

**Mode** User Exec and Privileged Exec

**Example** To ping the IP address 10.10.0.5 use the following command:

```
awplus# ping 10.10.0.5
```

**Example (VRF-lite)**

To ping the IP address 10.10.0.5 from VRF instance 'red', use the following command:

```
awplus# ping vrf red 10.10.0.5
```

***NOTE:*** *Unless a cross-domain static or leaked route exists to the destination IP address, you must run this command from within the same routing domain as the address being pinged.*

**Command changes**

Version 5.4.6-2.1: VRF-lite support added.

# rd (route distinguisher)

**Overview** This command creates a Route Distinguisher (RD). The RD forms part of the route table creation process for a VRF instance and is implemented only when using BGP routing.

**Syntax**

```
rd {<ASN:n>|<ip-address:n>}
```

***CAUTION:*** *This command does not have a "no" variant. To remove the RD requires deleting the VRF instance to which it is assigned. Therefore, it is important that you carefully enter the correct value for the RD.*

| Parameter | Description |
|---|---|
| *<ASN:n>* | The RD reference number. This is based on the formal RD format structure of ASN number:Ref number.<br>The ASN value can be any number between 1 and 4294967295, and the value n can be any number between 1 and 65535. |
| *<ip-address:n>* | The RD reference number. This is based on the formal RD format structure of IP-address:Ref number.<br>The IP-address must be in IPv4 format. The value n can be any number between 1 and 65535. |

***NOTE:*** *The above table refers to an ASN or Autonomous System Number. If you have a formal ASN number assigned to your BGP network, you should enter this value. Alternatively; because the Route Distinguisher has limited functionality in VRF-lite, you can use an unofficial value for your ASN when configuring this particular command.*

**Mode** VRF Configuration

**Usage notes** For the implementation of VRF-lite installed on your switch, this command has little practical functionality. However, the switch does check certain components of the RD that you enter. For this reason, the RD syntax must comply with the structural formats defined above, and each value that you assign to a VRF instance must be unique on the switch. Good networking practice is to use common values for the RD and RT within a VRF instance.

**Default** No default RD is configured.

**Example** To create an RD 100:2 that is associated with VRF "red" use the following commands:

```
awplus# config terminal
awplus(config)# ip vrf red
awplus(config-vrf)# rd 100:2
```

**Related commands** show ip vrf

# redistribute (into BGP or BGP4+)

**Overview** Use this command to inject routes from one routing process into a BGP or BGP4+ routing table.

Use the **no** variant of this command to disable this function.

**Syntax**

```
redistribute {ospf|rip|connected|static} [route-map
<route-map-entry-pointer>]
```

```
no redistribute {ospf|rip|connected|static} [route-map
<route-map-entry-pointer>]
```

| Parameter | Description |
|---|---|
| `connected` | Specifies the redistribution of connected routes for both BGP and BGP4+. |
| `ospf` | Specifies the redistribution of OSPF information for BGP or OSPFv3 information for BGP4+. |
| `rip` | Specifies the redistribution of RIP information for BGP or RIPng information for BGP4+. |
| `static` | Specifies the redistribution of Static routes for both BGP and BGP4+. |
| `route-map` | Route map reference for both BGP and BGP4+. |
| *`<route-map-entry-pointer>`* | Pointer to route-map entries. |

**Mode [BGP]** Router Configuration or IPv4 Address Family Configuration

**Mode [BGP4+]** Router Configuration or IPv6 Address Family Configuration

**Usage notes** Redistribution is used by routing protocols to advertise routes that are learned by some other means, such as by another routing protocol or by static routes. Since all internal routes are dumped into BGP, careful filtering is applied to make sure that only routes to be advertised reach the internet, not everything. This command allows redistribution by injecting prefixes from one routing protocol into another routing protocol.

**Examples [BGP/BGP+]** The following example shows the configuration of a route-map named `rmap1`, which is then applied using the **redistribute route-map** command.

```
awplus# configure terminal
awplus(config)# route-map rmap1 permit 1
awplus(config-route-map)# match origin incomplete
awplus(config-route-map)# set metric 100
awplus(config-route-map)# exit
awplus(config)# router bgp 12
awplus(config-router)# redistribute ospf route-map rmap1
```

To apply the above example to a specific VRF instance named `blue`, use the following commands:

```
awplus(config)# router bgp 12
awplus(config-router)# address-family ipv4 vrf blue
awplus(config-router-af)# redistribute ospf route-map rmap1
```

The following example shows the configuration of a route-map named `rmap2`, which is then applied using the **redistribute route-map** command.

```
awplus# configure terminal
awplus(config)# route-map rmap2 permit 3
awplus(config-route-map)# match interface vlan1
awplus(config-route-map)# set metric-type 1
awplus(config-route-map)# exit
awplus(config)# router ospf 100
awplus(config-router)# redistribute bgp route-map rmap2
```

Note that configuring a route-map and applying it with the redistribute route-map command allows you to filter which router are distributed from another routing protocol (such as OSPF with BGP). A route-map can also set the metric, tag, and metric-type of the redistributed routes.

**Command changes**

Added to AlliedWare Plus prior to 5.4.6-1

Version 5.4.6-2.1: VRF-lite support added to BGP for AR-series products

Version 5.4.7-2.1: BGP support added for IEx510, x550 series

Version 5.4.7-2.4: BGP support added for IE300 series

# redistribute (OSPF)

## Overview

Use this command to redistribute routes from other routing protocols, static routes and connected routes into an OSPF routing table.

Use the **no** variant of this command to disable this function.

## Syntax

```
redistribute {bgp|connected|rip|static} {metric
<0-16777214>|metric-type {1|2}|route-map <name>|tag
<0-4294967295>}
```

```
no redistribute {bgp|connected|rip|static} {metric
<0-16777214>|metric-type {1|2}|route-map <name>|tag
<0-4294967295>}
```

| Parameter | Description |
|---|---|
| `bgp` | Specifies that this applies to the redistribution of BGP routes. |
| `connected` | Specifies that this applies to the redistribution of connected routes. |
| `rip` | Specifies that this applies to the redistribution of RIP routes. |
| `static` | Specifies that this applies to the redistribution of static routes. |
| `metric` | Specifies the external metric. |
| `metric-type` | Specifies the external metric-type. |
| `route-map` | Specifies name of the route-map. |
| `tag` | Specifies the external route tag. |

## Default

The default metric value for routes redistributed into OSPF is 20. The metric can also be defined using the set metric command for a route map. Note that a metric defined using the set metric command for a route map overrides a metric defined with this command.

## Mode

Router Configuration

## Usage notes

You use this command to inject routes, learned from other routing protocols, into the OSPF domain to generate AS-external-LSAs. If a route-map is configured by this command, then that route-map is used to control which routes are redistributed and can set metric and tag values on particular routes.

The metric, metric-type, and tag values specified on this command are applied to any redistributed routes that are not explicitly given a different metric, metric-type, or tag value by the route map.

See the OSPF Feature Overview and Configuration Guide for more information about metrics, and about behavior when configured in route maps.

Note that this command does not redistribute the default route. To redistribute the default route, use the default-information originate command.

**Example**

The following example shows redistribution of BGP routes into OSPF routing table 100, with metric 12.

```
awplus# configure terminal
awplus(config)# router ospf 100
awplus(config-router)# redistribute bgp metric 12
```

The following example shows the configuration of a route-map named `rmap2`, which is then applied using the **redistribute route-map** command, so routes learned via interface vlan1 can be redistributed as type-1 external LSAs:

```
awplus# configure terminal
awplus(config)# route-map rmap2 permit 3
awplus(config-route-map)# match interface vlan1
awplus(config-route-map)# set metric-type 1
awplus(config-route-map)# exit
awplus(config)# router ospf 100
awplus(config-router)# redistributebgp rip route-map rmap2
```

Note that configuring a route-map and applying it with the **redistribute route-map** command allows you to filter which routes are distributed from another routing protocol (such as RIP). A route-map can also set the metric, tag, and metric-type of the redistributed routes.

**Related commands**

match interface

route-map

show ip ospf database external

# redistribute (RIP)

**Overview** Use this command to redistribute information from other routing protocols into RIP.

When using VRF-lite, you can apply this command to a specific VRF instance.

Use the **no** variant of this command to disable the specified redistribution. The parameters **metric** and **routemap** may be used with the **no** variant, but have no effect.

**Syntax**

```
redistribute {connected|static|ospf|bgp} [metric <0-16>]
[routemap <routemap>]
```

```
no redistribute {connected|static|ospf|bgp} [metric] [routemap]
```

| Parameter | Description |
|---|---|
| `routemap` | Optional. Specifies route-map that controls how routes are redistributed. |
| `<routemap>` | Optional. The name of the route map. |
| `connected` | Redistribute from connected routes. |
| `static` | Redistribute from static routes. |
| `ospf` | Redistribute from Open Shortest Path First (OSPF). |
| `bgp` | Redistribute from Border Gateway Protocol (BGP). |
| `metric <0-16>` | Optional. Sets the value of the metric that will be applied to routes redistributed into RIP from other protocols. If a value is not specified, and no value is specified using the default-metric (RIP) command, the default is one. |

**Default** By default, the RIP metric value is set to 1.

**Mode** RIP Router Configuration or RIP Router Address Family Configuration for a VRF instance.

**Example** To apply the metric value 15 to static routes being redistributed into RIP, use the commands:

```
awplus# configure terminal
awplus(config)# router rip
awplus(config-router)# redistribute static metric 15
```

**Example (VRF-lite)**

To apply the metric value 15 to static routes in address-family ipv4 VRF instance `blue` being redistributed into RIP, use the following commands:

```
awplus# configure terminal
awplus(config)# router rip
awplus(config-router)# address-family ipv4 vrf blue
awplus(config-router-af)# redistribute static metric 15
```

**Related commands**

default-metric (RIP)

**Command changes**

Version 5.4.6-2.1: VRF-lite support added.

# route (RIP)

**Overview**

Use this command to add a static RIP route.

Use the **no** variant of this command to remove a static RIP route.

**Syntax**

```
route <ip-addr/prefix-length>
no route <ip-addr/prefix-length>
```

| Parameter | Description |
|---|---|
| *<ip-addr/prefix-length>* | The IPv4 address and prefix length. |

**Default**

No static RIP route is added by default.

**Mode**

RIP Router Configuration or RIP Router Address Family Configuration for a VRF instance.

**Usage notes**

Use this command to add a static RIP route. After adding the RIP route, the route can be checked in the RIP routing table.

**Example**

To create a static RIP route to IP subnet 192.168.1.0/24, use the following commands:

```
awplus# configure terminal
awplus(config)# router rip
awplus(config-router)# route 192.168.1.0/24
```

**Example (VRF-lite)**

To create a static RIP route to IP subnet `192.168.1.0/24`, for the VRF instance `red`, use the following commands

```
awplus# configure terminal
awplus(config)# router rip
awplus(config-router)# address-family ipv4 vrf red
awplus(config-router-af)# route 192.168.1.0/24
```

**Related commands**

show ip rip

clear ip rip route

**Command changes**

Version 5.4.6-2.1: VRF-lite support added.

# route-target

**Overview** Use this command within a specific VRF instance, to create a route-target within the BGP extended communities path attribute field. This value can then be included in a list of import and export route target extended communities for the specified VRF instance. Learned routes that carry a specific route-target extended community are then imported into all VRFs configured with that extended community as an imported route-target.

The **no** variant of this command removes a route-target extended community for the VRF instance specified.

**Syntax**

```
route-target {import|export|both} {ASN:n|ip-address:n}
no route-target {import|export|both} {ASN:n|ip-address:n}
```

| Parameter | Description |
|---|---|
| `route-target` | Specifies a BGP extended community as a route-target. |
| `import` | Adds the route target to its import list. |
| `export` | Adds the route target to its export list. |
| `both` | Adds the route target to both the import and export lists. |
| *<ASN:n>* | The route target reference number. This uses the same structure that is defined for the RD. This being, ASN number:Ref number. The ASN value can be any number between 1 and 65535, and the value n can be any number between 1 and 4294967295. |
| *<ip-address:n>* | The route target reference number. This uses the same structure that is defined for the RD (Route Distinguisher). This being IP-address:Ref number.<br>In practice, the IP-address can be an entry in IPv4 format, or an integer number between 1 and 4294967295. The value n can be any number between 1 and 65535. |

**Mode** VRF Configuration

**Default** No route-target community attributes are associated with a VRF instance.

**Usage notes** In VRF systems that use MPLS, there is an close relationship between the Route Target (RT) and the Route Distinguisher (RD) values. For VRF-lite however, this relationship is only implicit in that they share the same format structure.

**Example** Use the following commands to create a route-target extended community for ASN value 200, and a Reference number of 3, within the VRF instance blue:

```
awplus# config terminal
awplus(config)# ip vrf blue
awplus(config-vrf)# route-target import 200:1
```

**Related commands**

ip vrf

show ip vrf

# router ospf

**Overview** Use this command to enter Router Configuration mode to configure an OSPF routing process. You must specify the process ID with this command for multiple OSPF routing processes on the device.

Use the **no** variant of this command to terminate an OSPF routing process.

Use the **no** parameter with the **process-id** parameter, to terminate and delete a specific OSPF routing process. If no **process-id** is specified on the **no** variant of this command, then all OSPF routing processes are terminated, and all OSPF configuration is removed.

**Syntax**

```
router ospf [<process-id>]
no router ospf [<process-id>]
```

**Syntax (VRF-lite)**

```
router ospf [<process-id>] [<vrf-instance>]
no router ospf [<process-id>]
```

| Parameter | Description |
|---|---|
| *<process-id>* | A positive number from 1 to 65535, that is used to define a routing process. |
| *<vrf-instance>* | The VRF instance to be associated with the OSPF routing process. |

**Default** No routing process is defined by default.

**Mode** Global Configuration

**Usage notes** The process ID of OSPF is an optional parameter for the **no** variant of this command only. When removing all instances of OSPF, you do not need to specify each Process ID, but when removing particular instances of OSPF you must specify each Process ID to be removed.

When using VRF-lite, this command can be used to associate a process-id with a VRF instance that has been created using the ip vrf command.

**Example** To enter Router Configuration mode to configure an existing OSPF routing process `100`, use the commands:

```
awplus# configure terminal
awplus(config)# router ospf 100
awplus(config-router)#
```

**Example (VRF-lite)**

To enter Router Configuration mode to configure an existing OSPF routing process `100` for VRF instance `red`, use the commands:

```
awplus# configure terminal
awplus(config)# router ospf 100 red
awplus(config-router)#
```

**Command changes**

Version 5.4.6-2.1: VRF-lite support added.

# router-id (VRF)

**Overview** Use this command to specify a router identifier (in IP address format). When using VRF-Lite, the router-id is configured for the specified VRF instance.

Use the **no** variant of this command to force OSPF to use the previous OSPF router-id behavior.

**Syntax**

```
router-id <ip-address>
no router-id
```

| Parameter | Description |
|---|---|
| *<ip-address>* | Specifies the router ID in IPv4 address format. |

**Mode** Router Configuration

**Usage notes** Configure each router with a unique router-id. In an OSPF router process that has active neighbors, a new router-id is used at the next reload or when you restart OSPF manually.

**Example** The following example shows a fixed router ID `10.10.10.60` for the VRF instance `red`:

```
awplus# configure terminal
awplus(config)# ip vrf red
awplus(config-router)# router-id 10.10.10.60
```

**Related commands**

show ip ospf

show ip vrf

# show arp

**Overview** Use this command to display entries in the ARP routing and forwarding table—the ARP cache contains mappings of IP addresses to physical addresses for hosts. To have a dynamic entry in the ARP cache, a host must have used the ARP protocol to access another host.

For information on filtering and saving command output, see the "Getting Started with AlliedWare Plus" Feature Overview and Configuration Guide.

**Syntax**

```
show arp
```

**Syntax (VRF-lite)**

```
show arp [global|security|vrf <vrf-name>]
```

| Parameter | Description |
|---|---|
| `global` | When VRF-lite is configured, apply this command to the global routing and forwarding table |
| `vrf` | Apply this command to the specified VRF instance. |
| `<vrf-name>` | The VRF instance name |

**Mode** User Exec and Privileged Exec

**Usage notes** Running this command with no additional parameters will display all entries in the ARP routing and forwarding table.

With VRF-lite configured, and no additional parameters entered, the command output displays all entries, listed by their VRF instance. By adding either a specific VRF instance or global parameter entry, you can selectively list ARP entries by their membership of a specific VRF instance.

**Example** To display all ARP entries in the ARP cache, use the following command:

```
awplus# show arp
```

**Output** Figure 34-1: Example output from the **show arp** command

```
awplus#show arp
IP Address       LL Address       Interface  Port         Type
192.168.27.10    192.168.4.1      vlan1      port1.0.1    dynamic
192.168.27.100   0000.daaf.cd24   vlan1      port1.0.2    dynamic
192.168.1.100    192.168.20.1     vlan2      port1.0.3    static
```

**Example (VRF-lite)** To display the dynamic ARP entries in the global routing instance, use the command:

```
awplus# show arp global
```

**Output** Figure 34-2: Example output from the **show arp global** command

```
awplus#show arp global
IP Address      LL Address      Interface    Port       Type
192.168.10.2    0015.77ad.fad8  vlan1        port1.0.1  dynamic
192.168.20.2    0015.77ad.fa48  vlan2        port1.0.2  dynamic
192.168.1.100   00d0.6b04.2a42  vlan2        port1.0.3  static
```

**Example (VRF-lite)** To display the dynamic ARP entries for a VRF instance 'red', use the command:

```
awplus# show arp vrf red
```

**Output** Figure 34-3: Example output from the **show arp vrf red** command

```
awplus# show arp vrf red
[VRF: red]
  IP Address      LL Address      Interface    Port       Type
  192.168.10.2    0015.77ad.fad8  vlan1        port1.0.1  dynamic
```

**Table 1:** Parameters in the output of the **show arp** command

| Parameter | Meaning |
|---|---|
| IP Address | IP address of the network device this entry maps to. |
| LL Address | Hardware address of the network device. |
| Interface | Interface over which the network device is accessed. |
| Port | Physical port that the network device is attached to. |
| Type | Whether the entry is a static or dynamic entry. Static entries are added using the arp command. Dynamic entries are learned from ARP request/reply message exchanges. |
| VRF | The name of the VRF instance. The VRF-lite components only display when VRF-lite is configured. |

**Related commands**

arp

clear arp-cache

ip vrf

**Command changes**

Version 5.4.6-2.1: VRF-lite support added.

Version 5.4.9-0.1: Link layer addresses now shown as the hardware address (MAC Address output parameter has been renamed to LL Address).

# show crypto key pubkey-chain knownhosts

**Overview** This command displays the list of public keys maintained in the known host database on the device.

**Syntax**
```
show crypto key pubkey-chain knownhosts [<1-65535>]
```

**Syntax (VRF-lite)**
```
show crypto key pubkey-chain knownhosts [vrf <vrf-name>|global]
[<1-65535>]
```

| Parameter | Description |
|---|---|
| `global` | When VRF-lite is configured, apply the command to the global routing and forwarding table. |
| `vrf` | Apply the command to the specified VRF instance. |
| `<vrf-name>` | The name of the VRF instance. |
| `<1-65535>` | Key identifier for a specific key. Displays the public key of the entry if specified. |

**Default** Display all keys.

**Mode** User Exec, Privileged Exec and Global Configuration

**Usage** When VRF-lite is configured:

- If **vrf** is specified, this command displays the known host database from the specified VRF instance.
- If **global** is specified, this command displays the known host database from the global routing environment.
- If neither **vrf** nor **global** is specified, this command displays the known host database from the global routing environment and each configured VRF.

For more information about VRF, see the VRF Lite Feature Overview and Configuration Guide.

**Examples** To display public keys of known SSH servers, use the command:

```
awplus# show crypto key pubkey-chain knownhosts
```

To display the key data of the first entry in the known host data, use the command:

```
awplus# show crypto key pubkey-chain knownhosts 1
```

**Output** Figure 34-4: Example output from the **show crypto key public-chain knownhosts** command

```
No     Hostname         Type Fingerprint
-----------------------------------------------------------------------
1      172.16.23.1      rsa  c8:33:b1:fe:6f:d3:8c:81:4e:f7:2a:aa:a5:be:df:18
2      172.16.23.10     rsa  c4:79:86:65:ee:a0:1d:a5:6a:e8:fd:1d:d3:4e:37:bd
3      5ffe:1053:ac21:ff00:0101:bcdf:ffff:0001
                        rsa1 af:4e:b4:a2:26:24:6d:65:20:32:d9:6f:32:06:ba:57
```

**Table 2:** Parameters in the output of the **show crypto key public-chain knownhosts** command

| Parameter | Description |
|---|---|
| `No` | Number ID of the key. |
| `Hostname` | Host name of the known SSH server. |
| `Type` | The algorithm used to generate the key. |
| `Fingerprint` | Checksum value for the public key. |

**Related commands** crypto key pubkey-chain knownhosts

**Command changes** Version 5.4.6-2.1: VRF-lite support added.

# show ip bgp cidr-only (BGP only)

**Overview** Use this command to display routes with non-natural network masks.

For information on filtering and saving command output, see the "Getting Started with AlliedWare Plus" Feature Overview and Configuration Guide.

**Syntax**

```
show ip bgp cidr-only
```

**Syntax (VRF-lite)**

```
show ip bgp [global|vrf <vrf-name>] cidr-only
```

| Parameter | Description |
|---|---|
| `global` | When VRF-lite is configured, apply the command to the global routing and forwarding table. |
| `vrf` | Apply the command to the specified VRF instance. |
| *<vrf-name>* | The name of the VRF instance. |

**Mode** User Exec and Privileged Exec

**Example**

```
awplus# show ip bgp cidr-only
awplus# show ip bgp vrf red cidr-only
```

**Output** Figure 34-5: Example output from the **show ip bgp cidr-only** command

```
BGP table version is 0, local router ID is 10.10.10.50

Status codes: s suppressed, d damped, h history, p stale, *
valid, > best, i - internal

Origin codes: i - IGP, e - EGP, ? - incomplete

   Network          Next Hop            Metric LocPrf Weight Path
*> 3.3.3.0/24       10.10.10.10                           0 11 i
*> 6.6.6.0/24       0.0.0.0                               32768 i

Total number of prefixes 2
```

**Command changes** Added to AlliedWare Plus prior to 5.4.6-1

Version 5.4.6-2.1: VRF-lite support added to BGP for AR-series products

Version 5.4.7-2.1: BGP support added for IEx510, x550 series

Version 5.4.7-2.4: BGP support added for IE300 series

# show ip bgp community (BGP only)

**Overview** Use this command to display routes that match specified communities from a BGP instance within an IPv4 environment. Use the show bgp ipv6 community (BGP4+ only) command within an IPv6 environment.

For information on filtering and saving command output, see the "Getting Started with AlliedWare Plus" Feature Overview and Configuration Guide.

You may use any combination and repetition of parameters listed in the *<type>* placeholder.

**Syntax**

```
show ip bgp community [<type>] [exact-match]
```

**Syntax (VRF-lite)**

```
show ip bgp [global|vrf <vrf-name>] community  [<type>]
[exact-match]
```

| Parameter | Description | |
|---|---|---|
| `global` | When VRF-lite is configured, apply the command to the global routing and forwarding table. | |
| `vrf` | Apply the command to the specified VRF instance. | |
| *<vrf-name>* | The name of the VRF instance. | |
| *<type>* | {[*AA:NN*][local-AS][no-advertise][no-export]} | |
| | *AA:NN* | Specifies the Autonomous System (AS) community number, in AA:NN format. |
| | `local-AS` | Do not send outside local Autonomous Systems (well-known community). |
| | `no-advertise` | Do not advertise to any peer (well-known community). |
| | `no-export` | Do not export to next AS (well-known community). |
| `exact-match` | Specifies that the exact match of the communities is displayed. This optional parameter cannot be repeated. | |

**Mode** User Exec and Privileged Exec

**Examples**

Note that the AS numbers shown are examples only.

```
awplus# show ip bgp community 64497:64499 exact-match
```

```
awplus# show ip bgp community 64497:64499 64500:64501
exact-match
```

```
awplus# show ip bgp community 64497:64499 64500:64501
64510:64511no-advertise
```

```
awplus# show ip bgp community no-advertise
no-advertiseno-advertise exact-match
```

```
awplus# show ip bgp community no-export 64510:64511
no-advertise local-AS no-export
```

```
awplus# show ip bgp community no-export 64510:64511
no-advertise 64497:64499 64500:64501 no-export
```

```
awplus# show ip bgp community no-export 64497:64499
no-advertise local-AS no-export
```

```
awplus# show ip bgp vrf red no-export
```

```
awplus# show ip bgp global 65500:2 65500:3 exact-match
```

**Related commands**

set community

show bgp ipv6 community (BGP4+ only)

**Command changes**

Added to AlliedWare Plus prior to 5.4.6-1

Version 5.4.6-2.1: VRF-lite support added to BGP for AR-series products

Version 5.4.7-2.1: BGP support added for IEx510, x550 series

Version 5.4.7-2.4: BGP support added for IE300 series

# show ip bgp community-list (BGP only)

**Overview**

Use this command to display routes that match the given community-list from a BGP instance within an IPv4 environment. Use the show bgp ipv6 community-list (BGP4+ only) command within an IPv6 environment.

For information on filtering and saving command output, see the "Getting Started with AlliedWare Plus" Feature Overview and Configuration Guide.

**Syntax**

```
show ip bgp community-list <listname> [exact-match]
```

**Syntax (VRF-lite)**

```
show ip bgp [global|vrf <vrf-name>] community-list <listname>
[exact-match]
```

| Parameter | Description |
|---|---|
| `global` | When VRF-lite is configured, apply the command to the global routing and forwarding table. |
| `vrf` | Apply the command to the specified VRF instance. |
| `<vrf-name>` | The name of the VRF instance. |
| `<listname>` | Specifies the community list name. |
| `exact-match` | Displays only routes that have exactly the same specified communities. |

**Mode**

User Exec and Privileged Exec

**Example**

```
awplus# show ip bgp community-list mylist exact-match
awplus# show ip bgp vrf red community-list myCommunity
awplus# show ip bgp global community-list myExactCommunity
exact-match
```

**Related commands**

show bgp ipv6 community-list (BGP4+ only)

**Command changes**

Added to AlliedWare Plus prior to 5.4.6-1

Version 5.4.6-2.1: VRF-lite support added to BGP for AR-series products

Version 5.4.7-2.1: BGP support added for IEx510, x550 series

Version 5.4.7-2.4: BGP support added for IE300 series

# show ip bgp dampening (BGP only)

**Overview** Use this command to show dampened routes from a BGP instance within an IPv4 environment. Use the show bgp ipv6 dampening (BGP4+ only) command within an IPv6 environment.

For information on filtering and saving command output, see the "Getting Started with AlliedWare Plus" Feature Overview and Configuration Guide.

**Syntax**

```
show ip bgp dampening
{dampened-paths|flap-statistics|parameters}
```

**Syntax (VRF-lite)**

```
show ip bgp [global|vrf <vrf-name>] dampening
{dampened-paths|flap-statistics|parameters}
```

| Parameter | Description |
|---|---|
| `global` | When VRF-lite is configured, apply the command to the global routing and forwarding table. |
| `vrf` | Apply the command to the specified VRF instance. |
| `<vrf-name>` | The name of the VRF instance. |
| `dampened-paths` | Display paths suppressed due to dampening. |
| `flap-statistics` | Display flap statistics of routes. |
| `parameters` | Display details of configured dampening parameters. |

**Mode** User Exec and Privileged Exec

**Usage notes** Enable BGP dampening to maintain dampened-path information in memory.

**Examples**

```
awplus# show ip bgp dampening dampened-paths
awplus# show ip bgp vrf red dampening dampened-paths
awplus# show ip bgp global dampening flap-statistics
```

**Output** Figure 34-6: Example output from the **show ip bgp dampening** command

```
dampening 15 750 2000 60 15
 Reachability Half-Life time    : 15 min
 Reuse penalty                  : 750
 Suppress penalty               : 2000
 Max suppress time              : 60 min
 Un-reachability Half-Life time : 15 min
 Max penalty (ceil)             : 11999
 Min penalty (floor)            : 375
```

The following example output shows that the internal route (`i`), has flapped 3 times and is now categorized as history (h).

Figure 34-7: Example output from the **show ip bgp dampening flap-statistics** command

```
awplus# show ip bgp dampening flap-statistics
BGP table version is 1, local router ID is 30.30.30.77
Status codes: s suppressed, d damped, h history, * valid, > best, i - internal,S
Stale
Origin codes: i - IGP, e - EGP, ? - incomplete
   Network            From                Flaps  Duration  Reuse   Path
 hi1.1.1.0/24       10.100.0.62              3  00:01:20            i
```

The following example output shows a dampened route in the `1.1.1.0/24` network.

Figure 34-8: Example output from the **show ip bgp dampening dampened-path** command

```
awplus# show ip bgp dampening dampened-paths
BGP table version is 1, local router ID is 30.30.30.77
Status codes: s suppressed, d damped, h history, * valid, > best, i - internal,S
Stale
Origin codes: i - IGP, e - EGP, ? - incomplete

     Network            From              Reuse     Path
 di 1.1.1.0/24       10.100.0.62        00:35:10     i

Total number of prefixes 1
```

**Related commands**

show bgp ipv6 dampening (BGP4+ only)

**Command changes**

Added to AlliedWare Plus prior to 5.4.6-1

Version 5.4.6-2.1: VRF-lite support added to BGP for AR-series products

Version 5.4.7-2.1: BGP support added for IEx510, x550 series

Version 5.4.7-2.4: BGP support added for IE300 series

# show ip bgp filter-list (BGP only)

**Overview** Use this command to display routes conforming to the filter-list within an IPv4 environment. Use the show bgp ipv6 filter-list (BGP4+ only) command to display routes conforming to the filter-list within an IPv6 environment

For information on filtering and saving command output, see the "Getting Started with AlliedWare Plus" Feature Overview and Configuration Guide.

**Syntax**

```
show ip bgp filter-list <listname>
```

**Syntax (VRF-lite)**

```
show ip bgp [global|vrf <vrf-name>] filter-list <listname>
```

| Parameter | Description |
|---|---|
| `global` | When VRF-lite is configured, apply the command to the global routing and forwarding table. |
| `vrf` | Apply the command to the specified VRF instance. |
| `<vrf-name>` | The name of the VRF instance. |
| `<listname>` | Specifies the regular-expression access list name. |

**Mode** User Exec and Privileged Exec

**Example**

```
awplus# show ip bgp filter-list mylist
awplus# show ip bgp vrf red filter-list mylist
```

**Related commands** show bgp ipv6 filter-list (BGP4+ only)

**Command changes** Added to AlliedWare Plus prior to 5.4.6-1

Version 5.4.6-2.1: VRF-lite support added to BGP for AR-series products

Version 5.4.7-2.1: BGP support added for IEx510, x550 series

Version 5.4.7-2.4: BGP support added for IE300 series

# show ip bgp inconsistent-as (BGP only)

**Overview**

Use this command to display routes with inconsistent AS Paths within an IPv4 environment. Use the show bgp ipv6 inconsistent-as (BGP4+ only) command to display routes with inconsistent AS paths within an IPv6 environment.

For information on filtering and saving command output, see the "Getting Started with AlliedWare Plus" Feature Overview and Configuration Guide.

**Syntax**

```
show ip bgp inconsistent-as
```

**Syntax (VRF-lite)**

```
show ip bgp [global|vrf <vrf-name>] inconsistent-as
```

| Parameter | Description |
|---|---|
| `global` | When VRF-lite is configured, apply the command to the global routing and forwarding table. |
| `vrf` | Apply the command to the specified VRF instance. |
| `<vrf-name>` | The name of the VRF instance. |

**Mode**

User Exec and Privileged Exec

**Example**

```
awplus# show ip bgp inconsistent-as
awplus# show ip bgp global inconsistent-as
```

**Related commands**

show bgp ipv6 inconsistent-as (BGP4+ only)

**Command changes**

Added to AlliedWare Plus prior to 5.4.6-1

Version 5.4.6-2.1: VRF-lite support added to BGP for AR-series products

Version 5.4.7-2.1: BGP support added for IEx510, x550 series

Version 5.4.7-2.4: BGP support added for IE300 series

# show ip bgp longer-prefixes (BGP only)

**Overview**

Use this command to display the route of the local BGP routing table for a specific prefix with a specific mask, or for any prefix having a longer mask than the one specified.

For information on filtering and saving command output, see the "Getting Started with AlliedWare Plus" Feature Overview and Configuration Guide.

**Syntax**

```
show ip bgp <ip-address/m> longer-prefixes
```

**Syntax (VRF-lite)**

```
show ip bgp [global|vrf <vrf-name>] <ip-address/m>
longer-prefixes
```

| Parameter | Description |
|---|---|
| `global` | When VRF-lite is configured, apply the command to the global routing and forwarding table. |
| `vrf` | Apply the command to the specified VRF instance. |
| `<vrf-name>` | The name of the VRF instance. |
| `<ip-address/m>` | Neighbor's IP address and subnet mask, entered in the form A.B.C.D/M, where M is the subnet mask length. |

**Mode**

User Exec and Privileged Exec

**Example**

```
awplus# show ip bgp 10.10.0.10/24 longer-prefixes
awplus# show ip bgp vrf red 172.16.4.0/24
awplus# show ip bgp global 172.16.0.0/16 longer-prefixes
```

**Command changes**

Added to AlliedWare Plus prior to 5.4.6-1

Version 5.4.6-2.1: VRF-lite support added to BGP for AR-series products

Version 5.4.7-2.1: BGP support added for IEx510, x550 series

Version 5.4.7-2.4: BGP support added for IE300 series

# show ip bgp prefix-list (BGP only)

**Overview**

Use this command to display routes matching the prefix-list within an IPv4 environment. Use the show bgp ipv6 prefix-list (BGP4+ only) command to display routes matching the prefix-list within an IPv6 environment.

For information on filtering and saving command output, see the "Getting Started with AlliedWare Plus" Feature Overview and Configuration Guide.

**Syntax**

```
show ip bgp prefix-list <list>
```

**Syntax (VRF-lite)**

```
show ip bgp [global|vrf <vrf-name>] prefix-list <list>
```

| Parameter | Description |
|---|---|
| `global` | When VRF-lite is configured, apply the command to the global routing and forwarding table. |
| `vrf` | Apply the command to the specified VRF instance. |
| `<vrf-name>` | The name of the VRF instance. |
| `<list>` | Specifies the name of the IP prefix list. |

**Mode**

User Exec and Privileged Exec

**Examples**

```
awplus# show ip bgp prefix-list mylist
awplus# show ip bgp vrf red prefix-list myPrefixes
```

**Related commands**

show bgp ipv6 prefix-list (BGP4+ only)

**Command changes**

Added to AlliedWare Plus prior to 5.4.6-1

Version 5.4.6-2.1: VRF-lite support added to BGP for AR-series products

Version 5.4.7-2.1: BGP support added for IEx510, x550 series

Version 5.4.7-2.4: BGP support added for IE300 series

# show ip bgp quote-regexp (BGP only)

**Overview** Use this command to display routes matching the AS path regular expression within an IPv4 environment. Use the show bgp ipv6 quote-regexp (BGP4+ only) command to display routes matching the AS path regular expression within an IPv6 environment.

Note that you must use quotes to enclose the regular expression with this command. Use the regular expressions listed below with the <*expression*> parameter:

| Symbol | Character | Meaning |
|---|---|---|
| ^ | Caret | Used to match the beginning of the input string. When used at the beginning of a string of characters, it negates a pattern match. |
| $ | Dollar sign | Used to match the end of the input string. |
| . | Period | Used to match a single character (white spaces included). |
| * | Asterisk | Used to match none or more sequences of a pattern. |
| + | Plus sign | Used to match one or more sequences of a pattern. |
| ? | Question mark | Used to match none or one occurrence of a pattern. |
| _ | Underscore | Used to match spaces, commas, braces, parenthesis, or the beginning and end of an input string. |
| [ ] | Brackets | Specifies a range of single-characters. |
| - | Hyphen | Separates the end points of a range. |

For information on filtering and saving command output, see the "Getting Started with AlliedWare Plus" Feature Overview and Configuration Guide.

**Syntax**

```
show ip bgp quote-regexp <expression>
```

**Syntax (VRF-lite)**

```
show ip bgp [global|vrf <vrf-name>] quote-regexp <expression>
```

| Parameter | Description |
|---|---|
| `global` | When VRF-lite is configured, apply the command to the global routing and forwarding table. |
| `vrf` | Apply the command to the specified VRF instance. |
| <*vrf-name*> | The name of the VRF instance. |
| <*expression*> | Specifies a regular-expression to match the BGP AS paths. |

**Mode** User Exec and Privileged Exec

**Examples**

```
awplus# show ip bgp quote-regexp myexpression
awplus# show ip bgp global quote-regexp 65550 65555
```

**Related commands**

show bgp ipv6 quote-regexp (BGP4+ only)

**Command changes**

Added to AlliedWare Plus prior to 5.4.6-1

Version 5.4.6-2.1: VRF-lite support added to BGP for AR-series products

Version 5.4.7-2.1: BGP support added for IEx510, x550 series

Version 5.4.7-2.4: BGP support added for IE300 series

# show ip bgp regexp (BGP only)

**Overview** Use this command to display routes matching the AS path regular expression within an IPv4 environment. Use the show bgp ipv6 regexp (BGP4+ only) command to display routes matching the AS path regular expression within an IPv6 environment.

Use the regular expressions listed below with the <*expression*> parameter:

| Symbol | Character | Meaning |
|---|---|---|
| ^ | Caret | Used to match the beginning of the input string. When used at the beginning of a string of characters, it negates a pattern match. |
| $ | Dollar sign | Used to match the end of the input string. |
| . | Period | Used to match a single character (white spaces included). |
| * | Asterisk | Used to match none or more sequences of a pattern. |
| + | Plus sign | Used to match one or more sequences of a pattern. |
| ? | Question mark | Used to match none or one occurrence of a pattern. |
| _ | Underscore | Used to match spaces, commas, braces, parenthesis, or the beginning and end of an input string. |
| [ ] | Brackets | Specifies a range of single-characters. |
| - | Hyphen | Separates the end points of a range. |

For information on filtering and saving command output, see the "Getting Started with AlliedWare Plus" Feature Overview and Configuration Guide.

**Syntax**

```
show ip bgp regexp <expression>
```

**Syntax (VRF-lite)**

```
show ip bgp [global|vrf <vrf-name>] regexp <expression>
```

| Parameter | Description |
|---|---|
| `global` | When VRF-lite is configured, apply the command to the global routing and forwarding table. |
| `vrf` | Apply the command to the specified VRF instance. |
| <*vrf-name*> | The name of the VRF instance. |
| <*expression*> | Specifies a regular-expression to match the BGP AS paths. |

**Mode** User Exec and Privileged Exec

**Examples**

```
awplus# show ip bgp regexp myexpression
awplus# show ip bgp vrf red regexp 65550 65555
```

**Related commands**

show bgp ipv6 regexp (BGP4+ only)

**Command changes**

Added to AlliedWare Plus prior to 5.4.6-1

Version 5.4.6-2.1: VRF-lite support added to BGP for AR-series products

Version 5.4.7-2.1: BGP support added for IEx510, x550 series

Version 5.4.7-2.4: BGP support added for IE300 series

# show ip bgp route-map (BGP only)

**Overview**

Use this command to display BGP routes that match the specified route-map within an IPv4 environment. Use the show bgp ipv6 route-map (BGP4+ only) command to display BGP4+ routes that match the specified route-map within an IPv6 environment.

For information on filtering and saving command output, see the "Getting Started with AlliedWare Plus" Feature Overview and Configuration Guide.

**Syntax**

```
show ip bgp route-map <route-map>
```

**Syntax (VRF-lite)**

```
show ip bgp [global|vrf <vrf-name>] route-map <route-map>
```

| Parameter | Description |
|---|---|
| `global` | When VRF-lite is configured, apply the command to the global routing and forwarding table. |
| `vrf` | Apply the command to the specified VRF instance. |
| `<vrf-name>` | The name of the VRF instance. |
| `<route-map>` | Specifies a route-map that is matched. |

**Mode**

User Exec and Privileged Exec

**Examples**

To show routes that match the route-map `myRouteMap` for the global routing instance, use the command:

```
awplus# show ip bgp global route-map myRouteMap
```

To show routes that match the route-map `myRouteMap`, use the command:

```
awplus# show ip bgp route-map myRouteMap
```

**Related commands**

show bgp ipv6 route-map (BGP4+ only)

**Command changes**

Added to AlliedWare Plus prior to 5.4.6-1

Version 5.4.6-2.1: VRF-lite support added to BGP for AR-series products

Version 5.4.7-2.1: BGP support added for IEx510, x550 series

Version 5.4.7-2.4: BGP support added for IE300 series

# show ip bgp summary (BGP only)

**Overview** Use this command to display a summary of a BGP neighbor status within an IPv4 environment. Use the show bgp ipv6 summary (BGP4+ only) command to display a summary of BGP4+ neighbors.

For information on filtering and saving command output, see the "Getting Started with AlliedWare Plus" Feature Overview and Configuration Guide.

**Syntax**

```
show ip bgp summary
```

**Syntax (VRF-lite)**

```
show ip bgp [global|vrf <vrf-name>] summary
```

| Parameter | Description |
|---|---|
| `global` | When VRF-lite is configured, apply the command to the global routing and forwarding table. |
| `vrf` | Apply the command to the specified VRF instance. |
| `<vrf-name>` | The name of the VRF instance. |

**Mode** User Exec and Privileged Exec

**Examples**

```
awplus# show ip bgp summary
awplus# show ip bgp vrf red summary
```

**Output** Figure 34-9: Example output from the **show ip bgp summary** command

```
awplus>show ip bgp summary

BGP router identifier 1.0.0.1, local AS number 65541
BGP table version is 12
4 BGP AS-PATH entries
0 BGP community entries

Neighbor        V         AS   MsgRc  MsgSnt TblVer InOutQ Up/Down   State/PfxRcd
192.168.3.2     4      65544      20      24     11 0/0    00:07:19          1
192.168.4.2     4      65545       0       0      0 0/0    never        Active
192.168.11.2    4      65542      34      40      0 0/0    00:00:04     Active
192.168.21.2    4      65543      29      32     11 0/0    00:07:03         13

Number of neighbors 4
```

The Up/Down column in this output is a timer that shows:

- "never" if the peer session has never been established
- The up time, if the peer session is currently up
- The down time, if the peer session is currently down.

In the example above, the session with 192.168.11.2 has been down for 4 seconds, and the session with 192.168.4.2 has never been established.

**Related commands**

show bgp ipv6 summary (BGP4+ only)

**Command changes**

Added to AlliedWare Plus prior to 5.4.6-1

Version 5.4.6-2.1: VRF-lite support added to BGP for AR-series products

Version 5.4.7-2.1: BGP support added for IEx510, x550 series

Version 5.4.7-2.4: BGP support added for IE300 series

# show ip interface vrf

**Overview** Use this command to display protocol and status information about configured interfaces and their assigned IP addresses in VRF instances.

For information on filtering and saving command output, see the "Getting Started with AlliedWare Plus" Feature Overview and Configuration Guide.

**Syntax**

```
show ip interface [vrf <vrf-name>|global]
```

| Parameter | Description |
|---|---|
| `vrf` | A VRF instance. |
| `<vrf-name>` | The name of a specific VRF instance. |
| `global` | The global routing and forwarding table. |

**Mode** User Exec and Privileged Exec

**Examples** To display all interfaces and IP addresses associated with a VRF instance 'red', use the command:

```
awplus# show ip interface vrf red
```

**Output** Figure 34-10: Example output from **show ip interface vrf red**

```
[VRF: red]
Interface            IP-Address         Status       Protocol
lo1                  unassigned         admin up     running
vlan1                192.168.10.1/24    admin up     running
```

**Example** To display all interfaces and IP addresses associated with all VRF instances, use the command:

```
awplus# show ip interface
```

**Output** Figure 34-11: Example output from the **show ip interface** with VRF-lite configured

```
Interface              IP-Address         Status         Protocol
eth0                   unassigned         admin up       down
lo                     unassigned         admin up       running
vlan1                  192.168.1.1/24     admin up       running
vlan4                  172.30.4.43/24     admin up       down

[VRF: red]
Interface              IP-Address         Status
Protocol
lo1                    unassigned         admin up       running

[VRF: blue]
Interface              IP-Address         Status
Protocol
lo2                    unassigned         admin up       running
```

**Command changes** Version 5.4.6-2.1: VRF-lite support added.

# show ip rip vrf database

**Overview** Use this command to display information about the RIP database that is associated with a specific VRF instance.

Entering this command with the **full** option included, will display information about the full RIP database (including sub-optimal routes) associated with a specific VRF instance.

For information on filtering and saving command output, see the "Getting Started with AlliedWare Plus" Feature Overview and Configuration Guide.

**Syntax**

```
show ip rip {vrf <vrf-name>|global} database [full]
```

| Parameter | Description |
|---|---|
| `vrf` | Specific VRF instance. |
| `<vrf-name>` | The name of the VRF instance. |
| `global` | The global routing and forwarding table. |
| `full` | Specify the full RIP database including sub-optimal RIP routes. |

**Mode** User Exec and Privileged Exec

**Example** To display information about the RIP database associated with a VRF instance 'blue', use the command:

```
awplus# show ip rip vrf blue database
```

**Output** Figure 34-12: Example output from the **show ip rip vrf blue database** command

```
Codes: R - RIP, Rc - RIP connected, Rs - RIP static
       C - Connected, S - Static, O - OSPF, B - BGP

   Network            Next Hop         Metric From            If       Time
Rc 192.168.30.0/24                         1                  vlan3
R  192.168.45.0/24    192.168.30.1         2 192.168.30.1     vlan3    02:46
```

**Related commands** show ip rip

**Command changes** Version 5.4.6-2.1: VRF-lite support added.

# show ip rip vrf interface

**Overview** Use this command to display information about the RIP interfaces that are associated with a specific VRF instance.

For information on filtering and saving command output, see the "Getting Started with AlliedWare Plus" Feature Overview and Configuration Guide.

**Syntax**

```
show ip rip {vrf <vrf-name>|global} interface
[<interface-name>]
```

| Parameter | Description |
|---|---|
| `vrf` | Specific VRF instance. |
| `<vrf-name>` | The name of the VRF instance. |
| `global` | The global routing and forwarding table. |
| `<interface-name>` | The IP RIP interface (VLAN). |

**Mode** User Exec and Privileged Exec

**Example** To display information about the RIP database associated with a VRF instance 'blue', use the command:

```
awplus# show ip rip vrf blue interface
```

**Output** Figure 34-13: Example output from **show ip rip vrf blue interface vlan3**

```
Codes: R - RIP, Rc - RIP connected, Rs - RIP static
       C - Connected, S - Static, O - OSPF, B - BGP

   Network            Next Hop         Metric From            If       Time
Rc 192.168.30.0/24                           1                vlan3
R  192.168.45.0/24    192.168.30.1 2   192.168.30.1          vlan3    02:46
```

***NOTE:*** *The Time parameter operates as follows:*

- RIP updates occur approximately every 30 seconds.
- Each update resets a count-down timer to 180 seconds (3 minutes).
- The Time parameter displays the count-down from the last reset.

**Related commands** show ip rip

**Command changes** Version 5.4.6-2.1: VRF-lite support added.

# show ip route

**Overview** Use this command to display routing entries in the FIB (Forwarding Information Base). The FIB contains the best routes to a destination, and your device uses these routes when forwarding traffic. You can display a subset of the entries in the FIB based on protocol.

To modify the lines displayed, use the | (output modifier token); to save the output to a file, use the > output redirection token.

**VRF-lite** If VRF-lite is configured, you can display routing entries in the FIB associated with either the global routing domain or a named VRF.

**Syntax**

```
show ip route [bgp|connected|ospf|rip|static|
<ip-addr>|<ip-addr/prefix-length>]
```

**Syntax (VRF-lite)**

```
show ip route {vrf <vrf-name>|global}
[bgp|connected|ospf|rip|static]
```

| Parameter | Description |
|---|---|
| `global` | If VRF-lite is configured, apply the command to the global routing and forwarding table. |
| `vrf` | Apply the command to the specified VRF instance. |
| `<vrf-name>` | The name of the VRF instance. |
| `bgp` | Displays only the routes learned from BGP. |
| `connected` | Displays only the routes learned from connected interfaces. |
| `ospf` | Displays only the routes learned from OSPF. |
| `rip` | Displays only the routes learned from RIP. |
| `static` | Displays only the static routes you have configured. |
| `<ip-addr>` | Displays the routes for the specified address. Enter an IPv4 address. |
| `<ip-addr/prefix-length>` | Displays the routes for the specified network. Enter an IPv4 address and prefix length. |

**Mode** User Exec and Privileged Exec

**Examples** To display the static routes in the FIB, use the command:

```
awplus# show ip route static
```

To display the OSPF routes in the FIB, use the command:

```
awplus# show ip route ospf
```

**Example (VRF-lite)**

To display all routing entries in the FIB associated with a VRF instance `red`, use the command:

```
awplus# show ip route vrf red
```

**Output**

Each entry in the output from this command has a code preceding it, indicating the source of the routing entry. For example, O indicates OSPF as the origin of the route. The first few lines of the output list the possible codes that may be seen with the route entries.

Typically, route entries are composed of the following elements:

- code
- a second label indicating the sub-type of the route
- network or host IP address
- administrative distance and metric
- next hop IP address
- outgoing interface name
- time since route entry was added

Figure 34-14: Example output from the **show ip route** command

```
Codes: C - connected, S - static, R - RIP, B - BGP
       O - OSPF, IA - OSPF inter area
       N1 - OSPF NSSA external type 1, N2 - OSPF NSSA external type 2
       E1 - OSPF external type 1, E2 - OSPF external type 2
       * - candidate default

O       10.10.37.0/24 [110/11] via 10.10.31.16, vlan2, 00:20:54
C       3.3.3.0/24 is directly connected, vlan1
C       10.10.31.0/24 is directly connected, vlan2
C       10.70.0.0/24 is directly connected, vlan4
O E2    14.5.1.0/24 [110/20] via 10.10.31.16, vlan2, 00:18:56
C       33.33.33.33/32 is directly connected, lo
```

**Connected Route**

The connected route entry consists of:

```
C       10.10.31.0/24 is directly connected, vlan2
```

This route entry denotes:

- Route entries for network 10.10.31.0/24 are derived from the IP address of local interface vlan2.
- These routes are marked as Connected routes (C) and always preferred over routes for the same network learned from other routing protocols.

**OSPF Route**

The OSPF route entry consists of:

```
O       10.10.37.0/24 [110/11] via 10.10.31.16, vlan2, 00:20:54
```

This route entry denotes:

- This route in the network 10.10.37.0/24 was added by OSPF.
- This route has an administrative distance of 110 and metric/cost of 11.
- This route is reachable via next hop 10.10.31.16.
- The outgoing local interface for this route is vlan2.
- This route was added 20 minutes and 54 seconds ago.

**OSPF External Route**

The OSPF external route entry consists of:

```
O E2    14.5.1.0/24 [110/20] via 10.10.31.16, vlan2, 00:18:56
```

This route entry denotes that this route is the same as the other OSPF route explained above; the main difference is that it is a Type 2 External OSPF route.

**Related commands**

ip route

maximum-paths

show ip route database

**Command changes**

Version 5.4.6-2.1: VRF-lite support added.

# show ip route database

**Overview** This command displays the routing entries in the RIB (Routing Information Base).

When multiple entries are available for the same prefix, RIB uses the routes' administrative distances to choose the best route. All best routes are entered into the FIB (Forwarding Information Base). To view the routes in the FIB, use the show ip route command.

To modify the lines displayed, use the | (output modifier token); to save the output to a file, use the > output redirection token.

**Syntax**

```
show ip route database [bgp|connected|ospf|rip|static]
```

**Syntax (VRF-lite)**

```
show ip route [vrf <vrf-name>|global] database
[bgp|connected|ospf|rip|static]
```

| Parameter | Description |
|---|---|
| `global` | If VRF-lite is configured, apply the command to the global routing and forwarding table. |
| `vrf` | Apply the command to the specified VRF instance. |
| `<vrf-name>` | The name of the VRF instance. |
| `bgp` | Displays only the routes learned from BGP. |
| `connected` | Displays only the routes learned from connected interfaces. |
| `ospf` | Displays only the routes learned from OSPF. |
| `rip` | Displays only the routes learned from RIP. |
| `static` | Displays only the static routes you have configured. |

**Mode** User Exec and Privileged Exec

**Example** To display the static routes in the RIB, use the command:

```
awplus# show ip route database static
```

**Output** Figure 34-15: Example output from the **show ip route database** command

```
Codes: C - connected, S - static, R - RIP, B - BGP
       O - OSPF, IA - OSPF inter area
       N1 - OSPF NSSA external type 1, N2 - OSPF NSSA external type 2
       E1 - OSPF external type 1, E2 - OSPF external type 2
              > - selected route, * - FIB route, p - stale info

O    *> 9.9.9.9/32 [110/31] via 10.10.31.16, vlan2, 00:19:21
O       10.10.31.0/24 [110/1] is directly connected, vlan2, 00:28:20
C    *> 10.10.31.0/24 is directly connected, vlan2
S    *> 10.10.34.0/24 [1/0] via 10.10.31.16, vlan2
O       10.10.34.0/24 [110/31] via 10.10.31.16, vlan2, 00:21:19
O    *> 10.10.37.0/24 [110/11] via 10.10.31.16, vlan2, 00:21:19
C    *> 10.30.0.0/24 is directly connected, vlan6
S    *> 11.22.11.0/24 [1/0] via 10.10.31.16, vlan2
O E2 *> 14.5.1.0/24 [110/20] via 10.10.31.16,vlan2, 00:19:21
O       16.16.16.16/32 [110/11] via 10.10.31.16, vlan2, 00:21:19
S    *> 16.16.16.16/32 [1/0] via 10.10.31.16, vlan2
O    *> 17.17.17.17/32 [110/31] via 10.10.31.16, vlan2, 00:21:19
C    *> 45.45.45.45/32 is directly connected, lo
O    *> 55.55.55.55/32 [110/21] via 10.10.31.16, vlan2, 00:21:19
C    *> 127.0.0.0/8 is directly connected, lo
```

**Example (VRF-lite)** To display all routing entries in the RIB associated with a VRF instance `red`, use the command:

```
awplus# show ip route vrf red database
```

**Output** Figure 34-16: Example output from the **show ip route vrf red database** command

```
[VRF: red]
Codes: C - connected, S - static, R - RIP, B - BGP
       O - OSPF, IA - OSPF inter area
       N1 - OSPF NSSA external type 1, N2 - OSPF NSSA external type 2
       E1 - OSPF external type 1, E2 - OSPF external type 2
              > - selected route, * - FIB route, p - stale info

O       192.168.10.0/24 [110/1] is directly connected, vlan1, 06:45:51
C    *> 192.168.10.0/24 is directly connected, vlan1
B     > 192.168.33.0/24 [20/0] via 192.168.30.3, 06:45:52
O E2 *> 192.168.110.0/24 [110/20] via 192.168.10.2, vlan1, 06:45:00
O E2 *> 192.168.111.0/24 [110/20] via 192.168.10.2, vlan1, 06:45:00
```

The routes added to the FIB are marked with a `*`. When multiple routes are available for the same prefix, the best route is indicated with the > symbol. All unselected routes have neither the `*` nor the > symbol.

```
S    *> 10.10.34.0/24 [1/0] via 10.10.31.16, vlan2
O       10.10.34.0/24 [110/31] via 10.10.31.16, vlan2, 00:21:19
```

These route entries denote:

- The same prefix was learned from OSPF and from static route configuration.

- Since this static route has a lower administrative distance than the OSPF route (110), the static route (1) is selected and installed in the FIB.

If the static route becomes unavailable, then the device automatically selects the OSPF route and installs it in the FIB.

**Related commands**

maximum-paths

show ip route

**Command changes**

Version 5.4.6-2.1: VRF-lite support added.

# show ip route summary

**Overview** This command displays a summary of the current RIB (Routing Information Base) entries.

To modify the lines displayed, use the | (output modifier token); to save the output to a file, use the > output redirection token.

**Syntax**

```
show ip route summary
```

**Syntax (VRF-lite)**

```
show ip route summary [vrf <vrf-name>|global]
```

| Parameter | Description |
|---|---|
| `vrf` | Specific VRF instance. |
| `<vrf-name>` | The name of the VRF instance. |
| `global` | The global routing and forwarding table. |

**Mode** User Exec and Privileged Exec

**Example** To display a summary of the current RIB entries, use the command:

```
awplus# show ip route summary
```

**Output** Figure 34-17: Example output from the **show ip route summary** command

```
IP routing table name is Default-IP-Routing-Table(0)
IP routing table maximum-paths is 4
Route Source    Networks
connected       5
ospf            2
Total           8
```

**Example (VRF-lite)** To display a summary of the current RIB entries associated with a VRF instance red, use the command:

```
awplus# show ip route summary vrf red
```

**Output**

Figure 34-18: Example output from the **show ip route summary vrf red** command

```
IP routing table name is Default-IP-Routing-Table(0)
IP routing table maximum-paths is 4
Route Source    Networks
connected       1
Total           1
FIB             0

[VRF: red]
Route Source    Networks
connected       1
ospf            2
Total           3
```

**Related commands**

show ip route

show ip route database

**Command changes**

Version 5.4.6-2.1: VRF-lite support added.

# show ip vrf

**Overview** This command displays brief configurations for a specific VRF instance.

**Syntax**

```
show ip vrf <vrf-name>
```

| Parameter | Description |
|---|---|
| *<vrf-name>* | The name of the VRF instance. |

**Mode** User Exec and Privileged Exec

**Example** To display brief information for the VRF instance red, use the command:

```
awplus# show ip vrf red
```

**Output** Figure 34-19: Example output from the show ip vrf red command

```
Name                    Default RD          Interfaces
red                     500:1               lo1, vlan1
```

**Related commands** show ip vrf interface

**Command changes** Version 5.4.6-2.1: VRF-lite support added.

# show ip vrf detail

**Overview** This command displays the detailed configuration for a specific VRF instance.

**Syntax**

```
show ip vrf detail <vrf-name>
```

| Parameter | Description |
|---|---|
| *<vrf-name>* | The name of the VRF instance. |

**Mode** User Exec and Privileged Exec

**Example** To display the detailed information for all VRF instances, use the command:

```
awplus# show ip vrf detail
```

**Output** Figure 34-20: Example output from the **show ip detail** command, for all VRF instances

```
VRF blue; Description: VRF for customer blue
FIB ID 3; Router ID: 192.168.30.1 (automatic)
Default RD 500:3
  Interfaces:
    lo3, vlan3
  Export route-target communities
    RT: 500:3
  Import route-target communities
    RT: 500:4
  Import route-map: blue45
  No export route-map

VRF red
FIB ID 1; Router ID: 192.168.10.1 (automatic)
Default RD 500:1
  Interfaces:
    lo1, vlan1
  Export route-target communities
    RT: 500:1
  Import route-target communities
    RT: 500:1
  Import route-map: red43
  No export route-map
```

**Related commands** show ip vrf

**Command changes** Version 5.4.6-2.1: VRF-lite support added.

# show ip vrf interface

**Overview** This command displays protocol, operational status, and address information, for interfaces existing within either a specified VRF instance, or all VRF instances.

**Syntax** `show ip vrf interface <vrf-name>`

| Parameter | Description |
|---|---|
| *<vrf-name>* | The name of the VRF instance. |

**Mode** User Exec and Privileged Exec

**Example** To display all interfaces and IP addresses associated with all VRF instances, use the command:

```
awplus# show ip vrf interface
```

**Output** Figure 34-21: Example output from the **show ip vrf interface** command

```
Interface            IP-Address         Status          Protocol   Vrf
lo1                  unassigned         admin up        running    red
lo2                  unassigned         admin up        running    green
vlan1                192.168.10.1/24    admin up        running    red
vlan2                192.168.20.1/24    admin up        running    green
```

**Example** To display all interfaces and IP addresses associated with the VRF instance `red`, use the command:

```
awplus# show ip vrf interface red
```

**Output** Figure 34-22: Example output from the **show ip vrf interface red** command

```
Interface            IP-Address         Status          Protocol   Vrf
lo1                  unassigned         admin up        running    red
vlan1                192.168.10.1/24    admin up        running    red
```

**Related commands** show ip vrf

**Command changes** Version 5.4.6-2.1: VRF-lite support added.

# show running-config vrf

**Overview** This command displays the running system VRF-related configurations for all VRF instances.

**Syntax**

```
show running-config vrf
```

**Mode** Privileged Exec

**Example** To display the running system VRF-related configurations, use the command:

```
awplus# show running-config vrf
```

**Output** Figure 34-23: Example output from the **show running config vrf** command

```
ip vrf red
rd 500:1
route-target export 500:1
route-target export 500:4
import map red 43
!
```

**Related commands** show ip vrf

# ssh

**Overview** Use this command to initiate a Secure Shell connection to a remote SSH server.

If the server requests a password to login, you need to type in the correct password at the "Password:" prompt.

An SSH client identifies the remote SSH server by its public key registered on the client device. If the server identification is changed, server verification fails. If the public key of the server has been changed, the public key of the server must be explicitly added to the known host database.

***NOTE:*** *A hostname specified with SSH cannot begin with a hyphen (-) character.*

**Syntax**

```
ssh [ip|ipv6] [user <username>|port <1-65535>|version {1|2}]
<remote-device> [<command>]
```

**Syntax (VRF-lite)** If the platform supports multicast for VRFs then specifying a VRF name the command will take effect on that VRF and not specifying a VRF will do it for the global VRF.

```
ssh vrf <vrf-name> [ip|ipv6] [user <username>|port
<1-65535>|version {1|2}] <remote-device> [<command>]
```

| Parameter | Description | |
|---|---|---|
| `vrf` | Apply the command to the specified VRF instance. | |
| *<vrf-name>* | The name of the VRF instance. | |
| `ip` | Specify IPv4 SSH. | |
| `ipv6` | Specify IPv6 SSH. | |
| `user` | Login user. If user is specified, the username is used for login to the remote SSH server when user authentication is required. Otherwise the current user name is used. | |
| | *<username>* | User name to login on the remote server. |
| `port` | SSH server port. If port is specified, the SSH client connects to the remote SSH server with the specified TCP port. Otherwise, the client port configured by "ssh client" command or the default TCP port (22) is used. | |
| | *<1-65535>* | TCP port. |
| `version` | SSH client version. If version is specified, the SSH client supports only the specified SSH version. By default, SSH client uses SSHv2 first. If the server does not support SSHv2, it will try SSHv1. The default version can be configured by "ssh client" command. | |
| | 1 | Use SSH version 1. |
| | 2 | Use SSH version 2. |

| Parameter | Description |
|---|---|
| *<remote-device>* | IPv4/IPv6 address or hostname of a remote server. The address is in the format A.B.C.D for an IPv4 address, or in the format X:X::X:X for an IPv6 address. Note that a hostname specified with SSH cannot begin with a hyphen (-) character. |
| *<command>* | A command to execute on the remote server. If a command is specified, the command is executed on the remote SSH server and the session is disconnected when the remote command finishes. |

**Mode**

User Exec and Privileged Exec

**Examples**

To login to the remote SSH server at 192.0.2.5, use the command:

```
awplus# ssh ip 192.0.2.5
```

To login to the remote SSH server at 192.0.2.5 as user “manager”, use the command:

```
awplus# ssh ip user manager 192.0.2.5
```

To login to the remote SSH server at 192.0.2.5 that is listening on TCP port 2000, use the command:

```
awplus# ssh port 2000 192.0.2.5
```

To login to the remote SSH server with “example_host” using an IPv6 session, use the command:

```
awplus# ssh ipv6 example_host
```

To run the **cmd** command on the remote SSH server at 192.0.2.5, use the command:

```
awplus# ssh ip 192.0.2.5 cmd
```

**Example (VRF-lite)**

To login to the remote SSH server at 192.168.1.1 on VRF “red”, use the command:

```
awplus# ssh vrf red 192.168.1.1
```

**Related commands**

crypto key generate userkey

crypto key pubkey-chain knownhosts

debug ssh client

ssh client

**Command changes**

Version 5.4.6-2.1: VRF-lite support added for AR-Series devices.

Version 5.4.8-1.2: secure mode syntax added for x220, x930, x550, XS900MX.

Version 5.4.8-2.1: secure mode syntax added for x950, SBx908 GEN2.

# tcpdump

**Overview** Use this command to start a tcpdump, which gives the same output as the Unix-like **tcpdump** command to display TCP/IP traffic. Press `<ctrl> + c` to stop a running tcpdump.

**Syntax**

```
tcpdump <line>
```

**Syntax (VRF-lite)**

```
tcpdump [vrf <vrf-name>] <line>
```

| Parameter | Description |
|---|---|
| *<line>* | Specify the dump options. For more information on the options for this placeholder see http://www.tcpdump.org/tcpdump_man.html |
| `vrf` | Apply the command to the specified VRF instance. |
| *<vrf-name>* | The name of the VRF instance. |

**Mode** Privileged Exec

**Example** To start a tcpdump running to capture IP packets, enter the command:

```
awplus# tcpdump ip
```

**Example (VRF-lite)** To start a tcpdump on interface vlan2 associated with a VRF instance red, enter the command:

```
awplus# tcpdump vrf red vlan2
```

**Output** Figure 34-24: Example output from the **tcpdump** command

```
03:40:33.221337 IP 192.168.1.1 > 224.0.0.13: PIMv2, Hello,
length: 34
1 packets captured
2 packets received by filter
0 packets dropped by kernel
```

**Related commands** debug ip packet interface

**Command changes** Version 5.4.6-2.1: VRF-lite support added.

# telnet

**Overview** Use this command to open a telnet session to a remote device.

**Syntax**

```
telnet {<hostname>|[ip] <ipv4-addr>|[ipv6] <ipv6-addr>}
[<port>]
```

**Syntax (VRF-lite)**

```
telnet [vrf <vrf-name>] {<hostname>|[ip] <ipv4-addr>|[ipv6]
<ipv6-addr>} [<port>]
```

| Parameter | Description |
|---|---|
| `vrf` | Apply this command to a VRF instance. |
| `<vrf-name>` | The name of the VRF instance. |
| `<hostname>` | The host name of the remote system. |
| `ip` | Keyword used to specify the IPv4 address or host name of a remote system. |
| `<ipv4-addr>` | An IPv4 address of the remote system. |
| `ipv6` | Keyword used to specify the IPv6 address of a remote system |
| `<ipv6-addr>` | Placeholder for an IPv6 address in the format `x:x::x:x`, for example, `2001:db8::8a2e:7334` |
| `<port>` | Specify a TCP port number (well known ports are in the range 1-1023, registered ports are 1024-49151, and private ports are 49152-65535). |

**Mode** User Exec and Privileged Exec

**Examples** To connect to TCP port 2602 on the device at 10.2.2.2, use the command:

```
awplus# telnet 10.2.2.2 2602
```

To connect to the telnet server `host.example`, use the command:

```
awplus# telnet host.example
```

To connect to the telnet server `host.example` on TCP port `100`, use the command:

```
awplus# telnet host.example 100
```

**Example (VRF-lite)** To open a telnet session to a remote host `192.168.0.1` associated with VRF instance `red`, use the command:

```
awplus# telnet vrf red ip 192.168.0.1
```

**Command changes** Version 5.4.6-2.1: VRF-lite support added.

# timers (RIP)

**Overview** Use this command to adjust routing network timers.

Use the **no** variant of this command to restore the defaults.

**Syntax**

```
timers basic <update> <timeout> <garbage>
no timers basic
```

| Parameter | Description |
|---|---|
| *<update>* | <5-2147483647><br>Specifies the period at which RIP route update packets are transmitted. The default is 30 seconds. |
| *<timeout>* | <5-2147483647><br>Specifies the routing information timeout timer in seconds. The default is 180 seconds. After this interval has elapsed and no updates for a route are received, the route is declared invalid. |
| *<garbage>* | <5-2147483647><br>Specifies the routing garbage collection timer in seconds. The default is 120 seconds. |

**Default** Enabled

**Mode** RIP Router Configuration or RIP Router Address Family Configuration for a VRF instance.

**Usage notes** This command adjusts the RIP timing parameters.

The update timer is the time between sending out updates, that contain the complete routing table, to every neighboring router.

If an update for a given route has not been seen for the time specified by the timeout parameter, that route is no longer valid. However, it is retained in the routing table for a short time, with metric 16, so that neighbors are notified that the route has been dropped.

When the time specified by the garbage parameter expires the metric 16 route is finally removed from the routing table. Until the garbage time expires, the route is included in all updates sent by the router.

All the routers in the network must have the same timers to ensure the smooth operation of RIP throughout the network.

**Examples** To set the update timer to 30, the routing information timeout timer to 180, and the routing garbage collection timer to 120, use the following command:

```
awplus# configure terminal
awplus(config)# router rip
awplus(config-router)# timers basic 30 180 120
```

To set the update timer to 30, the routing information timeout timer to 180, and the routing garbage collection timer to 120 with VRF, use the following command:

```
awplus# configure terminal
awplus(config)# router rip
awplus(config-router)# address-family ipv4 vrf blue
awplus(config-router-af)# timers basic 30 180 120
```

**Command changes**

Version 5.4.6-2.1: VRF-lite support added.

# traceroute

**Overview** Use this command to trace the route to the specified IPv4 host.

**Syntax**
```
traceroute {<ip-addr>|<hostname>}
```

**Syntax (VRF-lite)**
```
traceroute [vrf <vrf-name>] {<ip-addr>|<hostname>}
```

| Parameter | Description |
|---|---|
| *<ip-addr>* | The destination IPv4 address. The IPv4 address uses the format A.B.C.D. |
| *<hostname>* | The destination hostname. |
| `vrf` | Apply the command to the specified VRF instance. |
| *<vrf-name>* | The name of the VRF instance. |

**Mode** User Exec and Privileged Exec

**Example**
```
awplus# traceroute 10.10.0.5
```

**Example (VRF-lite)**
```
awplus# traceroute vrf red 192.168.0.1
```

**Command changes** Version 5.4.6-2.1: VRF-lite support added.

# version (RIP)

**Overview**

Use this command to specify a RIP version used globally by the router.

If VRF-lite is configured, you can specify a RIP version either globally, or for a particular VRF instance.

Use the **no** variant of this command to restore the default version.

**Syntax**

```
version {1|2}
no version
```

| Parameter | Description |
|---|---|
| 1\|2 | Specifies the version of RIP processing. |

**Default**

Version 2

**Mode**

RIP Router Configuration or RIP Router Address Family Configuration for a VRF instance.

**Usage notes**

RIP can be run in version 1 or version 2 mode. Version 2 has more features than version 1; in particular RIP version 2 supports authentication and classless routing. Once the RIP version is set, RIP packets of that version will be received and sent on all the RIP-enabled interfaces.

Setting the version command has no impact on receiving updates, only on sending them. The ip rip send version command overrides the value set by the version (RIP) command on an interface-specific basis. The ip rip receive version command allows you to configure a specific interface to accept only packets of the specified RIP version. The ip rip receive version command and the ip rip send version command override the value set by this command.

**Examples**

To specify a RIP version, use the following commands:

```
awplus# configure terminal
awplus(config)# router rip
awplus(config-router)# version 1
```

To specify a RIP version with VRF, use the following commands:

```
awplus# configure terminal
awplus(config)# router rip
awplus(config-router)# address-family ipv4 vrf blue
awplus(config-router-af)# version 1
```

**Related commands**

ip rip receive version

ip rip send version

show running-config

**Command changes** Version 5.4.6-2.1: VRF-lite support added.

# 35 SD-WAN Commands

## Introduction

**Overview**

This chapter provides an alphabetical reference of commands used to configure SD-WAN.

For more information, see the SD-WAN Feature Overview and Configuration Guide.

**Command List**


- "application-decision" on page 1698
- "consecutive probe loss" on page 1700
- "debug linkmon" on page 1702
- "destination (linkmon-probe)" on page 1704
- "dscp (linkmon-probe)" on page 1706
- "egress interface (linkmon-probe)" on page 1707
- "enable (linkmon-probe)" on page 1708
- "interval (linkmon-probe)" on page 1709
- "ip policy-route" on page 1710
- "ip-version (linkmon-probe)" on page 1712
- "ipv6 policy-route" on page 1713
- "jitter" on page 1715
- "latency" on page 1717
- "linkmon group" on page 1719
- "linkmon probe-history" on page 1720
- "linkmon probe" on page 1722
- "linkmon profile" on page 1724
- "load-balancing" on page 1725
- "member (linkmon-group)" on page 1726

- "pktloss" on page 1728
- "preference" on page 1730
- "sample-size (linkmon-probe)" on page 1732
- "show debugging linkmon" on page 1733
- "show linkmon probe" on page 1734
- "show linkmon probe-history" on page 1737
- "show pbr rules" on page 1739
- "show pbr rules brief" on page 1744
- "size (linkmon-probe)" on page 1746
- "source (linkmon-probe)" on page 1747
- "url (linkmon-probe)" on page 1748

# application-decision

**Overview** Use this command to select which method is used for the application decision.

**Syntax**

```
application-decision {once-only|continuous}
```

| Parameter | Description |
|---|---|
| once-only | When a traffic flow reaches the PBR engine for the first time, whatever application has been set on that flow will be used to match against the PBR rules and a route selected. Subsequent updates to the flow's application will be ignored by the PBR engine. |
| continuous | Any time a traffic flow has its application updated by the DPI engine, the PBR engine will re-process the flow against all configured PBR rules, which may result in a new match and the traffic being directed over a different route than it was previously. |

**Default** Application determination is set to **continuous**.

**Mode** Policy-based Routing Configuration

**Usage notes** When using a DPI engine, traffic flows through the device are periodically assigned an application by the DPI engine. The application assignment is then used when matching against PBR rules. The DPI engine may change its decision about a traffic flow over time, as more packets from the flow are analyzed. This command determines how the PBR engine utilizes the application decision made by DPI.

When set to **once-only**, only the initial application decision made by the DPI engine will be used when matching against PBR routes, and subsequent updates will be ignored.

When set to **continuous**, if the DPI engine re-classifies a traffic flow under a different application, the flow will be re-processed by the PBR engine, and may therefore match against a different PBR rule and take a different route than it was previously.

Once-only is intended for use with DPI learning enabled. Refer to the SD-WAN Feature Overview and Configuration Guide for examples.

**Example** To prevent the PBR engine from re-matching a traffic flow whenever the application decision is changed, use the following commands:

```
awplus(config)# policy-based-routing
awplus(config-pbr)# application-decision once-only
```

To allow the PBR engine to re-match traffic flows against PBR rules when the application decision changes, use the following commands:

```
awplus(config)# policy-based-routing
awplus(config-pbr)# application-decision continuous
```

**Related commands**

ip policy-route

ipv6 policy-route

**Command changes**

Version 5.4.8-0.2: command added

# consecutive probe loss

**Overview** Use this command within a specific link performance profile to configure the allowable consecutive probe loss thresholds of probes that use that performance profile.

Use the **no** variant of this command to delete a consecutive probe loss threshold.

**Syntax**

```
consecutive-probe-loss bad-when <consecutive-probe-losses>
consecutive-probe-loss good-when <consecutive-probe-successes>
consecutive-probe-loss unreachable-when
<consecutive-probe-losses>
no consecutive-probe-loss bad-when
no consecutive-probe-loss good-when
no consecutive-probe-loss unreachable-when
```

| Parameter | Description |
|---|---|
| `bad-when <consecutive-probe-losses>` | The number of probes that must be lost consecutively, at which point the associated link is considered to be bad or unreachable, in a range of <1-100>. |
| `good-when <consecutive-probe-successes>` | The number of probes that must succeed consecutively, at which point the associated link is considered to be good, in a range of <1-100>. |
| `unreachable-when <consecutive-probe-losses>` | The number of probes that must be lost consecutively, at which point the associated link is considered to be bad or unreachable, in a range of <1-100>. |

**Default** The performance profile is disabled.

**Mode** Linkmon Profile Configuration

**Usage notes** These setting are all optional.

The **bad-when** parameter is used to set the thresholds where if the number of probe replies that have been lost consecutively is equal to or above this value, then that nexthop is considered bad. If **bad-when** is not configured, this metric will never result in a nexthop being considered bad.

The **unreachable-when** parameter is used to set the thresholds where if the number of probe replies that have been lost consecutively is equal to or above this value, then that nexthop is considered unreachable or down. If **unreachable-when** is not configured, this metric will never result in a nexthop being considered unreachable.

The **good-when** parameter is used to state the thresholds where if the number of probe replies that have been successfully received consecutively is equal to or above this value, then that nexthop is considered good. If **good-when** is not

configured, then when a nexthop is considered bad or unreachable due to this metric, the first successful probe result will consider the nexthop as good.

**Example**

To configure the point at or above which consecutive probe loss is unacceptable to be 10, the point at or above which consecutive probe success is acceptable to be 5, and the point at or above which consecutive probe loss indicates the destination is unreachable to be 15 for performance profile named "profile0", use the following commands:

```
awplus# configure terminal
awplus(config)# linkmon profile profile0
awplus(config-linkmon-profile)# consecutive-probe-loss
bad-when 10
awplus(config-linkmon-profile)# consecutive-probe-loss
good-when 5
awplus(config-linkmon-profile)# consecutive-probe-loss
unreachable-when 15
```

To delete consecutive-probe-loss thresholds in performance profile "profile0", use the following commands:

```
awplus# configure terminal
awplus(config)# linkmon profile profile0
awplus(config-linkmon-profile)# no consecutive-probe-loss
bad-when
awplus(config-linkmon-profile)# no consecutive-probe-loss
good-when
awplus(config-linkmon-profile)# no consecutive-probe-loss
unreachable-when
```

**Command changes**

Version 5.4.8-1.1: command added

# debug linkmon

**Overview** Use this command to enable Link Health Monitoring debugging.

Use the **no** variant of this command to disable Link Health Monitoring debugging.

**Syntax**

```
debug linkmon [probe|group|ip-address|interface|pbr-group]
no debug linkmon [probe|group|ip-address|interface|pbr-group]
debug linkmon probe name <name>
no debug linkmon probe name <name>
debug linkmon group name <name>
no debug linkmon group name <name>
```

| Parameter | Description |
|---|---|
| `probe` | Link Health Monitoring probe. |
| `group` | Link Health Monitoring group. |
| `ip-address` | IP addresses that are of interest to Link Health Monitoring. |
| `interface` | Interfaces that are of interest to Link Health Monitoring. |
| `pbr-group` | This debug option will show debugging of policy-based-routing Link Health Monitoring groups. Policy based routing rules without an explicit Link Health Monitoring configuration will internally create Link Health Monitoring groups that are not visible from the Link Health Monitoring api/cli externally (apart from debug). The names for these groups are prefixed with 'pbr'. Their relationship to policy based routing rules can be seen with policy based routing debug enabled. |
| *<name>* | The name identifying a Link Health Monitoring probe or Link Health Monitoring group. |

**Default** No debugging is enabled.

**Mode** Privileged Exec

**Usage notes** If **probe** is specified, then debug related to all Link Health Monitoring probes is enabled.

If **probe name** *<name>* is specified, then debug related to the named Link Health Monitoring probe is enabled.

If **group** is specified, then debug related to all Link Health Monitoring groups is enabled.

If **group name** *<name>* is specified, then debug related to the named Link Health Monitoring group is enabled.

If **ip-address** is specified, then debug related to configuration of IP addresses that are of interest to Link Health Monitoring are enabled. These IP addresses could influence Link Health Monitoring group members being considered up/down.

If **interface** is specified, then debug related to up/down state of Link Health Monitoring is enabled.

**Example**

To enable debugging on the Link Health Monitoring probe 'probe1', use the following command:

```
awplus# debug linkmon probe name probe1
```

To enable debugging on all Link Health Monitoring groups, use the following command:

```
awplus# debug linkmon group
```

To disable debugging on all Link Health Monitoring groups, use the following command:

```
awplus# no debug linkmon group
```

**Related commands**

show debugging linkmon

**Command changes**

Version 5.4.8-0.2: command added

# destination (linkmon-probe)

**Overview** Use this command to set the destination of a Link Health Monitoring probe. This is a required configuration option for probes.

Use the **no** variant of this command to remove the destination of a probe.

**Syntax**

```
destination {<ip-address>|ds-lite|<fqdn>}
no destination
```

| Parameter | Description |
|---|---|
| *<ip-address>* | The destination of the probe, an IPv4 or IPv6 IP address. |
| ds-lite | The destination of the probe, the DS-Lite AFTR address. |
| *<fqdn>* | The destination of the probe, an FQDN (fully qualified domain name). The IP address of the FQDN will be automatically resolved by the DNS on the device. |

**Mode** Linkmon ICMP Probe Configuration

**Example** To set the destination of a probe named 'probe1' to 192.168.2.200, use the following commands:

```
awplus(config)# linkmon probe name probe1
awplus(config-linkmon-icmp-probe)# destination 192.168.2.200
```

To set the destination of a probe named 'probe1' to 2001:db8:a0b:12f0::1, use the following commands:

```
awplus(config)# linkmon probe name probe1
awplus(config-linkmon-icmp-probe)# destination
2001:db8:a0b:12f0::1
```

To set the destination of a probe named 'probe1' to the DS-Lite AFTR address, use the following commands:

```
awplus(config)# linkmon probe name probe1
awplus(config-linkmon-icmp-probe)# destination ds-lite
```

To set the destination of a probe named 'probe1' to the FQDN of "google.com", use the following commands:

```
awplus(config)# linkmon probe name probe1
awplus(config-linkmon-icmp-probe)# destination google.com
```

To remove the destination of a probe named 'probe1', use the following commands:

```
awplus(config)# linkmon probe name probe1
awplus(config-linkmon-icmp-probe)# no destination
```

**Related commands** linkmon probe

**Command changes** Version 5.4.8-1.1: command added

# dscp (linkmon-probe)

**Overview** Use this command to set the DSCP value of packets used for Link Health Monitoring probes.

Use the **no** variant of this command to set it back to the default.

**Syntax**

```
dscp <dscp-value>
no dscp
```

| Parameter | Description |
|---|---|
| *<dscp-value>* | The DSCP value for the probe packet in range *<0-63>*. |

**Default** The default DSCP value is 0.

**Mode** Linkmon ICMP Probe Configuration

**Example** To set the DSCP of a probe named 'probe1' to 10, use the following commands:

```
awplus(config)# linkmon probe name probe1
awplus(config-linkmon-icmp-probe)# dscp 10
```

To set the DSCP of a probe named 'probe1' back to default, use the following commands:

```
awplus(config)# linkmon probe name probe1
awplus(config-linkmon-icmp-probe)# no dscp
```

**Related commands** linkmon probe

**Command changes** Version 5.4.8-1.1: command added

# egress interface (linkmon-probe)

**Overview**

Use this command to force a Link Health Monitoring probe to egress out of a specific interface.

Use the **no** variant of this command to return interface selection back to the default behavior.

**Syntax**

```
egress interface <interface>
no egress interface
```

| Parameter | Description |
|---|---|
| *<interface>* | The name of the egress interface for the probe. The specified egress interface needs to be locally configured and in an up and running state. |

**Default**

No egress interface is defined by default. The egress interface will be selected using standard routing behavior to reach the probe's destination.

**Mode**

Linkmon HTTP Probe Configuration, or Linkmon ICMP Probe Configuration

**Example**

To set the egress interface for a probe named 'probe1' to 'tunnel2', use the following commands:

```
awplus(config)# linkmon probe name probe1
awplus(config-linkmon-icmp-probe)# egress interface tunnel2
```

To set the egress interface for a probe named 'probe1' back to the default, use the following commands:

```
awplus(config)# linkmon probe name probe1
awplus(config-linkmon-icmp-probe)# no egress interface
```

**Command changes**

Version 5.4.8-1.1: command added

# enable (linkmon-probe)

**Overview** Use this command to enable individual Link Health Monitoring probes. When a probe is enabled, it will begin transmitting, processing, and storing results.

Use the **no** variant of this command to disable a probe.

**Syntax**

```
enable
no enable
```

**Default** Disabled

**Mode** Linkmon HTTP Probe Configuration, or Linkmon ICMP Probe Configuration

**Example** To enable a probe named 'probe1', use the following commands:

```
awplus(config)# linkmon probe name probe1
awplus(config-linkmon-icmp-probe)# enable
```

To disable a probe named 'probe1', use the following commands:

```
awplus(config)# linkmon probe name probe1
awplus(config-linkmon-icmp-probe)# no enable
```

**Related commands** linkmon probe

**Command changes** Version 5.4.8-1.1: command added

# interval (linkmon-probe)

**Overview** Use this command to set the interval between Link Health Monitoring probe packets.

Use the **no** variant of this command to set the interval back to the default.

**Syntax**

```
interval <probe-interval>
no interval
```

| Parameter | Description |
|---|---|
| *<probe-interval>* | The gap between probes being transmitted. For ICMP probes, this is a range of 100-10000 milliseconds. For HTTP probes, this is a range of 30000-3600000 milliseconds. |

**Default** For ICMP probes, the default interval is 1000 milliseconds. For HTTP probes, the default interval is 60000 milliseconds.

**Mode** Linkmon HTTP Probe Configuration, or Linkmon ICMP Probe Configuration

**Example** To set the interval of a probe named 'probe1' to 100, use the following commands:

```
awplus(config)# linkmon probe name probe1
awplus(config-linkmon-icmp-probe)# interval 100
```

To set the interval of a probe named 'probe1' back to default, use the following commands:

```
awplus(config)# linkmon probe name probe1
awplus(config-linkmon-icmp-probe)# no interval
```

**Related commands** linkmon probe

**Command changes** Version 5.4.8-1.1: command added

# ip policy-route

**Overview** Use this command to configure IP policy routes. These routes specify how the device will route traffic from specified applications and entities. You can specify the route's next-hop by specifying the egress interface, or by specifying the next-hop device's IP address (except on dynamic interfaces such as PPPoE). You can also list alternative next-hops to use if your first choice is down.

You can also specify the pseudo interface Null. Null should be the last nexthop specified, as this will drop packets when used as the nexthop.

Use the **no** variant of this command to remove a policy route.

**Syntax**

```
ip policy-route [<1-500>] [match <application-name>] [from
<source-entity>] [to <destination-entity>] nexthop
{<interface-list>|<ip-add-list>}
```

```
no ip policy-route <1-500>
```

| Parameter | Description |
|---|---|
| *<1-500>* | The policy route ID number.<br>If you do not specify an ID number, the device assigns the new policy route the next available number, in multiples of 10. For example, if the highest numbered policy route is 81, the next policy route would be given an ID of 90.<br>Policy routes are checked in order of ID number, starting with the lowest ID number. The device applies the policy route as soon as it finds a matching route; it does not check the remaining policy routes. |
| *<application-name>* | An application name. |
| *<source-entity>* | A source entity name. |
| *<destination-entity>* | A destination entity name. |
| *<interface-list>* | The name of the egress interface or interfaces. You can list up to 8 interfaces per policy route; the device sends the traffic out the first interface in the list that is up. |
| *<ip-add-list>* | The IP address of the next-hop. You can list up to 8 next-hop addresses per policy route; the device sends the traffic to the first address in the list that is reachable. Do not use this when the next-hop is on a dynamic interface (e.g. PPPoE); specify the interface name instead. |

**Default** No policy routes

**Mode** Policy-based Routing Configuration

**Usage notes**

You must specify at least one of the **match**, **from** or **to** parameters. Packets will be routed to the specified next-hop if they match the application, come from the source entity, and are destined for the destination entity.

Before creating a policy route, you need to create the application and entities that specify the traffic you want to route. To create an application, use the application command. To create entities, use the zone, network (zone), and host (network) commands. To see existing applications and entities, use the show application and show entity commands.

**Examples**

To create a policy route to route traffic that matches an application called "voice", comes from the entity called "inside", and is destined for the entity called "outside", use the following commands:

```
awplus# configure terminal
awplus(config)# policy-based-routing
awplus(config-pbr)# policy-based-routing enable
awplus(config-pbr)# ip policy-route 10 match voice from inside
to outside nexthop 10.37.236.65
```

To delete the policy route created above, use the following commands:

```
awplus# configure terminal
awplus(config)# policy-based-routing
awplus(config-pbr)# no ip policy-route 10
```

To route the above traffic via ppp0 if ppp0 is up, or ppp1 if ppp0 is down, use the following commands:

```
awplus# configure terminal
awplus(config)# policy-based-routing
awplus(config-pbr)# policy-based-routing enable
awplus(config-pbr)# ip policy-route 20 match voice from inside
to outside nexthop ppp0 ppp1
```

To delete the policy route created above, use the following commands:

```
awplus# configure terminal
awplus(config)# policy-based-routing
awplus(config-pbr)# no ip policy-route 20
```

**Related commands**

policy-based-routing

policy-based-routing enable

show application

show entity

show ip pbr route

**Command changes**

Version 5.4.8-0.2: number of routes increased, null interface added

# ip-version (linkmon-probe)

**Overview** Use this command to set the IP version for the Link Health Monitoring ICMP probe.

Use the **no** variant of this command to set it back to the default.

**Syntax**

```
ip-version {4|6}
no ip-version
```

| Parameter | Description |
|---|---|
| 4 | Internet Protocol (IPv4) |
| 6 | Internet Protocol version 6 (IPv6) |

**Default** IPv4

**Mode** Linkmon HTTP Probe Configuration, or Linkmon ICMP Probe Configuration

**Example** To set the IP version as IPv6 for a probe named 'probe1', use the following commands:

```
awplus(config)# linkmon probe name probe1
awplus(config-linkmon-icmp-probe)# ip-version 6
```

To set the IP version back to the default for a probe named 'probe1', use the following commands:

```
awplus(config)# linkmon probe name probe1
awplus(config-linkmon-icmp-probe)# no ip-version
```

**Command changes** Version 5.4.8-1.1: command added

# ipv6 policy-route

**Overview** Use this command to configure IPv6 policy routes. These routes specify how the device will route traffic from specified applications and entities. You can specify the route's next-hop by specifying the egress interface, or by specifying the next-hop device's IPv6 address (except on dynamic interfaces such as PPPoE). You can also list alternative next-hops to use if your first choice is down.

You can also specify the pseudo interface Null. Null should be the last nexthop specified, as this will drop packets when used as the nexthop.

Use the **no** variant of this command to remove a policy route.

**Syntax**

```
ipv6 policy-route [<1-500>] [match <application-name>] [from
<source-entity>] [to <destination-entity>] nexthop
{<interface-list>|<ipv6-add-list>}
```

```
no ipv6 policy-route <1-500>
```

| Parameter | Description |
|---|---|
| *<1-500>* | The policy route ID number.<br>If you do not specify an ID number, the device assigns the new policy route the next available number, in multiples of 10. For example, if the highest numbered policy route is 81, the next policy route would be given an ID of 90.<br>Policy routes are checked in order of ID number, starting with the lowest ID number. The device applies the policy route as soon as it finds a matching route; it does not check the remaining policy routes. |
| *<application-name>* | An application name. |
| *<source-entity>* | A source entity name. |
| *<destination-entity>* | A destination entity name. |
| *<interface-list>* | The name of the egress interface or interfaces. You can list up to 8 interfaces per policy route; the device sends the traffic out the first interface in the list that is up. |
| *<ipv6-add-list>* | The IPv6 address of the next-hop, specified in the form X:X::X:X. You can list up to 8 next-hop addresses per policy route; the device sends the traffic to the first address in the list that is reachable.<br>Do not use this when the next-hop is on a dynamic interface (e.g. PPPoE); specify the interface name instead. |

**Default** No policy routes

**Mode** Policy-based Routing Configuration

**Usage notes**

You must specify at least one of the **match**, **from** or **to** parameters. Packets will be routed to the specified next-hop if they match the application, come from the source entity, and are destined for the destination entity.

Before creating a policy route, you need to create the application and entities that specify the traffic you want to route. To create an application, use the application command. To create entities, use the zone, network (zone), and host (network) commands. To see existing applications and entities, use the show application and show entity commands.

**Examples**

To create a policy route to route traffic that matches an application called "voice", comes from the entity called "inside", and is destined for the entity called "outside", use the following commands:

```
awplus# configure terminal
awplus(config)# policy-based-routing
awplus(config-pbr)# policy-based-routing enable
awplus(config-pbr)# ipv6 policy-route 10 match voice from
inside to outside nexthop 2001:100::1
```

To delete the policy route created above, use the following commands:

```
awplus# configure terminal
awplus(config)# policy-based-routing
awplus(config-pbr)# no ipv6 policy-route 10
```

To route the above traffic via ppp0 if ppp0 is up, or ppp1 if ppp0 is down, use the following commands:

```
awplus# configure terminal
awplus(config)# policy-based-routing
awplus(config-pbr)# policy-based-routing enable
awplus(config-pbr)# ipv6 policy-route 20 match voice from
inside to outside nexthop ppp0 ppp1
```

To delete the policy route created above, use the following commands:

```
awplus# configure terminal
awplus(config)# policy-based-routing
awplus(config-pbr)# no ipv6 policy-route 20
```

**Related commands**

policy-based-routing

policy-based-routing enable

show application

show entity

show ipv6 pbr route

**Command changes**

Version 5.4.8-0.2: number of routes increased, null interface added

# jitter

**Overview** Use this command to configure the thresholds for the jitter metric. This metric is used to judge whether probes associated with this performance profile are good or bad.

Use the **no** variant of this command to remove jitter bad-above and jitter good-below ranges.

**Syntax**

```
jitter bad-above <unacceptable-jitter-point>
jitter good-below <acceptable-jitter-point>
no jitter bad-above
no jitter good-below
```

| Parameter | Description |
|---|---|
| `bad-above <unacceptable-jitter-point>` | The point above which jitter is unacceptable in range *<1-1000>* in milliseconds.<br>When a probe associated with this profile has a jitter result greater than this value, the associated Link Health Monitoring member will be considered 'bad'. |
| `good-below <acceptable-jitter-point>` | The point at or below which jitter is acceptable in range *<1-1000>* in milliseconds.<br>When a probe associated with this profile has a jitter result less than this value, the associated Link Health Monitoring member will be considered 'good'. |

**Mode** Linkmon Profile Configuration

**Usage notes** If only **bad-above** is configured, then if the probe results indicate a nexthop is above this value, then that nexthop is considered bad. As soon as the results fall below this value, the nexthop will be immediately considered good.

The combination of these two parameters allow for hysteresis, which may prevent link-flapping behavior. For example, with a **bad-above** value of 100, and a **good-below** value of 90, if the jitter rises to 100 the link will be marked 'bad', but it will not be marked 'good' until it reaches or falls below 90.

If only **good-below** is configured, then probe results will not cause a nexthop to be considered bad.

**Example** To configure the point above which jitter is unacceptable to be 100ms and the point at or below which jitter is acceptable to be 90ms for a performance profile named 'profile1', use the following commands:

```
awplus(config)# linkmon profile profile1
awplus(config-linkmon-profile)# jitter bad-above 100
awplus(config-linkmon-profile)# jitter good-below 90
```

To delete the jitter ranges for a performance profile named 'profile1', use the following commands:

```
awplus(config)# linkmon profile profile1
awplus(config-linkmon-profile)# no jitter bad-above
awplus(config-linkmon-profile)# no jitter good-below
```

**Related commands**

ip policy-route

latency

member (linkmon-group)

linkmon probe

linkmon profile

pktloss

preference

**Command changes**

Version 5.4.8-0.2: command added

# latency

**Overview** Use this command to configure the thresholds for the latency metric. This metric is used to judge whether probes associated with this performance profile are good or bad.

Use the **no** variant of this command to remove latency bad-above and latency good-below ranges.

**Syntax**

```
latency bad-above <unacceptable-latency-point>
latency good-below <acceptable-latency-point>
no latency bad-above
no latency good-below
```

| Parameter | Description |
|---|---|
| `bad-above <unacceptable-latency-point>` | The point above which latency is unacceptable in range *<1-2000>* in milliseconds.<br>When a probe associated with this profile has a latency result greater than this value, the associated Link Health Monitoring member will be considered 'bad'. |
| `good-below <acceptable-latency-point>` | The point at or below which latency is acceptable in range *<1-2000>* in milliseconds.<br>When a probe associated with this profile has a latency result less than this value, the associated Link Health Monitoring member will be considered 'good'. |

**Mode** Linkmon Profile Configuration

**Usage notes** If only **bad-above** is configured, then if the probe results indicate a nexthop is above this value, then that nexthop is considered bad. As soon as the results fall below this value, the nexthop will be immediately considered good.

The combination of these two parameters allow for hysteresis, which may prevent link-flapping behavior. For example, with a **bad-above** value of 100, and a **good-below** value of 90, if the latency rises to 100 the link will be marked 'bad', but it will not be marked 'good' until it reaches or falls below 90.

If only **good-below** is configured, then probe results will not cause a nexthop to be considered bad.

**Example** To configure the point above which latency is unacceptable to be 100ms and the point at or below which latency is acceptable to be 90ms for a performance profile named 'profile1', use the following commands:

```
awplus(config)# linkmon profile profile1
awplus(config-linkmon-profile)# latency bad-above 100
awplus(config-linkmon-profile)# latency good-below 90
```

To delete the latency ranges for a performance profile named 'profile1', use the following commands:

```
awplus(config)# linkmon profile profile1
awplus(config-linkmon-profile)# no latency bad-above
awplus(config-linkmon-profile)# no latency good-below
```

**Related commands**

ip policy-route

jitter

member (linkmon-group)

linkmon probe

linkmon profile

pktloss

preference

**Command changes**

Version 5.4.8-0.2: command added

# linkmon group

**Overview**

Use this command to create a Link Health Monitoring group and enter Linkmon Group Configuration mode where this group can be configured.

Use the **no** variant of this command to remove a configured group. All members previously belonging to the group are also removed.

**Syntax**

```
linkmon group <group-name>
no linkmon group <group-name>
```

| Parameter | Description |
|---|---|
| *<group-name>* | The name of the link monitoring group. |

**Mode**

Global Configuration

**Example**

To create a new link monitoring group named 'group1', use the following commands:

```
awplus# configure terminal
awplus(config)# linkmon group group1
awplus(config-linkmon-group)#
```

To remove a link monitoring group named 'group1', use the following commands:

```
awplus# configure terminal
awplus(config)# no linkmon group group1
```

**Related commands**

ip policy-route

jitter

latency

linkmon probe

linkmon profile

load-balancing

member (linkmon-group)

pktloss

preference

show linkmon probe

**Command changes**

Version 5.4.8-1.1: command added

# linkmon probe-history

**Overview** Use this command to create a collection instance that records the metrics gathered by a Link Health Monitoring probe.

Use the **no** variant of this command to remove the specified collection instance.

**Syntax**

```
linkmon probe-history [<1-65535>] probe <probe-name> interval
<1-2678400> buckets <1-65535>
```

```
no linkmon probe-history <1-65535>
```

| Parameter | Description |
|---|---|
| *<1-65535>* | The ID of the collection instance. If this is not set on creation then it will be automatically allocated. |
| *<probe-name>* | The name of the probe to record metrics for. |
| *<1-2678400>* | The interval that metrics are collated, in seconds. |
| *<1-65535>* | The maximum number of metric history samples. |

**Mode** Global Configuration

**Usage notes** Metrics are collated every **interval** seconds. Up to **buckets** samples of metrics are collated.

Different **interval** and **buckets** values can be used to record specific kinds of histories. For example, an **interval** value of 1 and a **buckets** value of 3600 would record per second metrics of a probe for an hour. An **interval** value of 3600 and a **buckets** value of 744 would record per hour metrics of a probe for 31 days.

Using the Web API, metric values for a sample are returned as a sum and a count. The sum can be divided by the count for an average. For example, if 10 probes have been sent during a history interval, then the metric counts would be 10 for a sample, and the sum would be the total of the metric values.

If a probe receives no reply then no metric is recorded.

Packet loss is not recorded exactly. Instead the probes sent and probe replies received is recorded.

***CAUTION:*** *This configuration option can consume a large amount of RAM on the device, particularly if high numbers of buckets are configured. The memory will be increasingly consumed over time as the probe history is collected. Excessive use of this feature may result in a device configuration that appears stable for a period of hours or days, until the device eventually exhausts its available memory and reboots. It is recommended that this option only be enabled when required, and disabled after the necessary information has been collected.*

**Example**

To create a Link Health Monitoring probe history collection instance with an ID of 10 for a probe named 'probe1' that collates metrics every second while keeping up to 300 samples, use the following command:

```
awplus# configure terminal
awplus(config)# linkmon probe-history 10 probe probe1 interval
1 buckets 300
```

To create a Link Health Monitoring probe history collection instance with an automatically allocated ID for a probe named 'probe1' that collates metrics every 60 seconds while keeping up to 3600 samples, use the following command:

```
awplus# configure terminal
awplus(config)# linkmon probe-history probe probe1 interval 60
buckets 3600
```

**Related commands**

linkmon probe

**Command changes**

Version 5.4.8-0.2: command added

# linkmon probe

**Overview** Use this command to create a Link Health Monitoring probe and enter the appropriate Link Health Monitoring Probe Configuration Mode where this probe can be configured.

Use the **no** variant of this command to delete the Link Health Monitoring probe.

**Syntax**

```
linkmon probe name <probe-name> [type {icmp-ping|http-get}]
no linkmon probe name <probe-name>
```

| Parameter | Description |
|---|---|
| *<probe-name>* | The name of the probe. |
| type | The type of the probe. Indicates the packet type or protocol used by the probe, either of icmp-ping (ICMP) or http-get (HTTP). This parameter is optional. If not entered, a newly created probe's type defaults to icmp-ping. |

**Default** The default probe type for a newly created probe is **icmp-ping**. The optional parameter **type** is only required to create a probe type other than the default. The **type** parameter is not required when editing an existing probe or deleting a probe.

**Mode** Global Configuration

**Usage notes** The optional probe **type** parameter represents the packet type or protocol used in the transmission of the probe. A probe of type **icmp-ping** will present some different configuration options to a probe of type **http-get**.

An **icmp-ping** Link Health Monitoring probe requires a destination, and must be enabled for probing to begin.

An **http-get** Link Health Monitoring probe requires a URL, and must be enabled for probing to begin.

**Example** To create a probe named 'probe1' using the default probe type and enter Link Health Monitoring ICMP Probe Configuration Mode to configure it, use the following commands:

```
awplus# configure terminal
awplus(config)# linkmon probe name probe1
awplus(config-linkmon-icmp-probe)#
```

To create a probe named 'probe1' using the default ICMP probe type and enter Link Health Monitoring ICMP Probe Configuration Mode to configure it, use the following commands:

```
awplus# configure terminal
awplus(config)# linkmon probe name probe1 type icmp-ping
awplus(config-linkmon-icmp-probe)#
```

To create a probe named 'probe1' using the HTTP probe type and enter Link Health Monitoring HTTP Probe Configuration Mode to configure it, use the following commands:

```
awplus# configure terminal
awplus(config)# linkmon probe name probe1 http-probe
awplus(config-linkmon-http-probe)#
```

To remove a probe named 'probe1', use the following commands:

```
awplus# configure terminal
awplus(config)# no linkmon probe name probe1
```

**Related commands**

enable (linkmon-probe)

interval (linkmon-probe)

ip policy-route

jitter

latency

linkmon probe-history

linkmon profile

member (linkmon-group)

pktloss

preference

show linkmon probe

show linkmon probe-history

size (linkmon-probe)

**Command changes**

Version 5.4.8-0.2: command added

Version 5.4.8-1.1: now operates as a modal command, with the new type parameter used to determine whether to enter ICMP or HTTP probe mode

# linkmon profile

**Overview**

Use this command to create a Link Health Monitoring performance profile and enter Linkmon Profile Configuration mode where this profile can be configured.

Use the **no** variant of this command to remove a configured performance profile.

**Syntax**

```
linkmon profile <profile-name>
no linkmon profile <profile-name>
```

| Parameter | Description |
|---|---|
| *<profile-name>* | The name of the performance profile. |

**Mode**

Global Configuration

**Example**

To create a new performance profile named 'profile1', use the following commands:

```
awplus# configure terminal
awplus(config)# linkmon profile profile1
awplus(config-linkmon-profile)#
```

To remove a performance profile named 'profile1', use the following commands:

```
awplus# configure terminal
awplus(config)# no linkmon profile profile1
```

**Related commands**

ip policy-route

jitter

latency

linkmon probe

member (linkmon-group)

pktloss

preference

show linkmon probe

**Command changes**

Version 5.4.8-0.2: command added

# load-balancing

**Overview**

Use this command to enable load-balancing for a Link Health Monitoring group.

Use the **no** variant of this command to remove load-balancing from a Link Health Monitoring group.

**Syntax**

```
load-balancing
no load-balancing
```

**Default**

Load-balancing is disabled.

**Mode**

Linkmon Group Configuration

**Usage notes**

When load-balancing is enabled, traffic will be load-balanced across all valid nexthops.

Load-balancing is achieved using a hashing algorithm on a per-flow basis for each application. For example, if two users visit YouTube, the session for user 1 may be sent over Tunnel 1, and the session for user 2 may be sent over Tunnel 2. Packets from each session will be sent entirely within one tunnel, until that session ends.

When a Link Health Monitoring group is configured for load-balancing, the preferred-metric used in any profile that is combined with the group in a PBR rule will be ignored when selecting 'good' links to send traffic over. This is because when load-balancing is enabled, all links that are 'good' are selected to send traffic over, so preferred metric is not required for tie-breaking. The preferred-metric is still used when all links within a group are considered 'bad' by a profile, in which case the least-bad link according to the preferred metric will be selected as the single link to send traffic over.

**Example**

To enable load-balancing on the Link Health Monitoring group “BranchOffice”, use the following commands:

```
awplus# configure terminal
awplus(config)# linkmon group BranchOffice
awplus(config-linkmon-group)# load-balancing
```

To disable load-balancing on the Link Health Monitoring group “BranchOffice”, use the following commands:

```
awplus# configure terminal
awplus(config)# linkmon group BranchOffice
awplus(config-linkmon-group)# no load-balancing
```

**Related commands**

linkmon group

**Command changes**

Version 5.4.8-1.1: command added

# member (linkmon-group)

**Overview** Use this command to create a link monitoring group member and specify its nexthop destination and the probe to be used to gather metrics to judge the health of this member. A maximum of 8 members can be created per group.

Use the **no** variant of this command to remove a group member. The member ID is mandatory upon deletion.

**Syntax**

```
member [<member-id>] destination <ip-address>|<interface> probe
<probe-name>
```

```
no member <member-id>
```

| Parameter | Description |
|---|---|
| *<member-id>* | The ID of the link monitoring group member, a number in range *<1-128>*. |
| `destination` | The nexthop destination of the member that traffic will be directed to when this member is judged as the best available within the group, according the probe metric results and PBR rule profile. |
| *<ip-address>* | The IPv4 or IPv6 IP address of the next-hop.<br>Do not use this when the next-hop is on a dynamic interface (e.g. PPPoE); specify the interface name instead. |
| *<interface>* | The name of the egress interface of the next-hop. |
| *<probe-name>* | The name of an existing probe. |

**Mode** Linkmon Group Configuration

**Usage notes** Users can also optionally specify a group member ID. If no ID is specified, a unique ID will be automatically created and assigned to the group member.

The pseudo interface Null can be specified as a nexthop. This acts as an always up but bad interface. This is to be chosen as the best member when all other members are unavailable. No probe needs to be specified for this type of member.

**Example** To create a new group member in group 'group1' using probe 'probe1' with ID 10 and destination 'tunnel1', use the following commands:

```
awplus# configure terminal
awplus(config)# linkmon group group1
awplus(config-linkmon-group)# member 10 destination tunnel1
probe probe1
```

To delete the group member with member ID '10' in group 'group1', use the following commands:

```
awplus# configure terminal
awplus(config)# linkmon group group1
awplus(config-linkmon-group)# no member 10
```

**Related commands**

ip policy-route

member (linkmon-group)

linkmon profile

linkmon probe

show linkmon probe

**Command changes**

Version 5.4.8-0.2: command added

# pktloss

**Overview** Use this command to configure the thresholds for the packet loss metric. This metric is used to judge whether probes associated with this performance profile are good or bad.

Use the **no** variant of this command to remove packet loss rate bad-above and packet loss rate good-below ranges.

**Syntax**

```
pktloss bad-above <unacceptable-pktloss-point>
pktloss good-below <acceptable-pktloss-point>
no pktloss bad-above
no pktloss good-below
```

| Parameter | Description |
|---|---|
| *<unacceptable-pktloss-point>* | The point above which packet loss rate is unacceptable in range *<0.0-100.0>* in percent to one decimal place.<br>When a probe associated with this profile has a packet loss rate result greater than this value, the associated Link Health Monitoring member will be considered 'bad'. |
| *<acceptable-pktloss-point>* | The point at or below which packet loss rate is acceptable in range *<0.0-100.0>* in percent to one decimal place.<br>When a probe associated with this profile has a packet loss rate result less than this value, the associated Link Health Monitoring member will be considered 'good'. |

**Mode** Linkmon Profile Configuration

**Usage notes** If only **bad-above** is configured, then if the probe results indicate a nexthop is above this value, then that nexthop is considered bad. As soon as the results fall below this value, the nexthop will be immediately considered good.

The combination of these two parameters allow for hysteresis, which may prevent link-flapping behavior. For example, with a **bad-above** value of 5, and a **good-below** value of 3, if the packet loss rises to 5 the link will be marked 'bad', but it will not be marked 'good' until it reaches or falls below 3.

If only **good-below** is configured, then probe results will not cause a nexthop to be considered bad.

Packet loss also has a built-in threshold, where when it reaches 100% packet loss, the associated member is automatically considered unreachable / down, and will never be used as a nexthop for packets that match the PBR rule. If all members within a group are unreachable in this manner, then traffic will be routed via default routing behavior, rather than PBR. If the group has a member configured with a NULL destination, when all other members in the group are unreachable, traffic will be dropped (blackhole routed) instead.

**Example**

To configure the point above which packet loss rate is unacceptable to be 5% and the point at or below which packet loss rate is acceptable to be 3.0% for a performance profile named 'profile1', use the following commands:

```
awplus(config)# linkmon profile profile1
awplus(config-linkmon-profile)# pktloss bad-above 5.0
awplus(config-linkmon-profile)# pktloss good-below 3.0
```

To delete the packet loss rate ranges for a performance profile named 'profile1', use the following commands:

```
awplus(config)# linkmon profile profile1
awplus(config-linkmon-profile)# no pktloss bad-above
awplus(config-linkmon-profile)# no pktloss good-below
```

**Related commands**

ip policy-route

jitter

latency

member (linkmon-group)

linkmon probe

linkmon profile

preference

**Command changes**

Version 5.4.8-0.2: command added

# preference

**Overview** Use this command to configure the preferred metric of probes that use this Link Health Monitoring performance profile.

Use the **no** variant of this command to remove a preference.

**Syntax**

```
preference {latency|jitter|pktloss}
no preference
```

| Parameter | Description |
|---|---|
| latency | Use latency as the tie-breaker metric. |
| jitter | Use jitter as the tie-breaker metric. |
| pktloss | Use packet loss rate as the tie-breaker metric. |

**Default** No preference is applied.

**Mode** Linkmon Profile Configuration

**Usage notes** When two or more members within the same group have the same link-health judgment (good, bad), the metric nominated as the preferred one is used as a tie-break to select the best member amongst those that are tied. If the metric values for the preferred metric are identical, or preferred metric is not set in the profile, then the member with the lowest ID is selected as the best one.

**Example** To choose maximum allowable latency to be the preferred metric for a performance profile named 'profile1', use the following commands:

```
awplus# configure terminal
awplus(config)# linkmon profile profile1
awplus(config-linkmon-profile)# preference latency
```

To delete an existing preference for a performance profile named 'profile1', use the following commands:

```
awplus# configure terminal
awplus(config)# linkmon profile profile1
awplus(config-linkmon-profile)# no preference
```

**Related commands**

ip policy-route

jitter

latency

member (linkmon-group)

linkmon probe

linkmon profile

pktloss

**Command changes** Version 5.4.8-0.2: command added

# sample-size (linkmon-probe)

**Overview**

Use this command to set the sample size used for calculating latency and jitter metrics for a Link Health Monitoring probe.

Use the **no** variant of this command to set the sample size back to the default value.

**Syntax**

```
sample-size <1-100>
no sample-size
```

| Parameter | Description |
|---|---|
| *<1-100>* | The number of probe samples to use when calculating the latency and jitter metrics. |

**Default**

The default sample size is 5.

**Mode**

Linkmon ICMP Probe Configuration

**Example**

To set the sample size a probe named 'probe1' to 10, use the following commands:

```
awplus(config)# linkmon probe name probe1
awplus(config-linkmon-icmp-probe)# sample-size 10
```

To set the sample size a probe named 'probe1' back to the default, use the following commands:

```
awplus(config)# linkmon probe name probe1
awplus(config-linkmon-icmp-probe)# no sample-size
```

**Related commands**

linkmon probe

**Command changes**

Version 5.4.8-1.1: command added

# show debugging linkmon

**Overview** Use this command to display the output of link monitoring debugging settings.

**Syntax**

```
show debugging linkmon
```

**Mode** Privileged Exec

**Example** To show the current debugging settings for link monitoring, use the following command:

```
awplus# show debugging linkmon
```

**Output** Figure 35-1: Example output from **show debugging linkmon**

```
awplus#show debugging linkmon
  probes                            TUNNEL10
                                    TUNNEL20
  groups                            GROUP1
                                    GROUP2
  ip address debugging is           off
  interface debugging is            on
  pbr-group debugging is            on
```

Table 35-1: Parameters in the output from **show debugging linkmon**

| Parameter | Description |
|---|---|
| probes | A list of the Link Health Monitoring probes with debugging enabled. |
| groups | A list of the Link Health Monitoring groups with debugging enabled. |
| ip address debugging | Whether IP address debugging is enabled. |
| interface debugging | Whether interface debugging is enabled. |
| pbr-group debugging | Whether PBR-group debugging is enabled. |

**Related commands** debug linkmon

**Command changes** Version 5.4.8-0.2: command added

# show linkmon probe

**Overview** Use this command to display output for one or all link monitoring probes.

**Syntax** `show linkmon probe [<probe-name>]`

| Parameter | Description |
|---|---|
| *<probe-name>* | The name of the specific probe to display. |

**Mode** User Exec and Privileged Exec

**Example** To show the output for all link monitoring probes, use the following command:

```
awplus# show linkmon probe
```

To show the output for a link monitoring probe named 'probe1', use the following command:

```
awplus# show linkmon probe probe1
```

**Output** Figure 35-2: Example output from **show linkmon probe**

```
BRANCH#show linkmon probe
Probe Name            : Head-Office-VPN1
 Status               : enabled
 Type                 : ICMP
 IP version           : IPv4
 Destination          : 198.51.100.1
 Egress Int           : -
 Source               : -
 DSCP                 : -
 Packet Size          : -
 Interval             : -
 Sample Size          : -
Latest Metrics
 Latency              : 1001ms
 Jitter               : 0ms
 Packet Loss          : 0.0%
Probe Details
 Probes Sent          : 3154
 Last Probe Sent      : 23 Mar 2018 03:36:00
 Last Probe Received  : 23 Mar 2018 03:36:00

Probe Name            : Head-Office-VPN2
 Status               : enabled
 Type                 : ICMP
```

```
 IP version           : IPv4
 Destination          : 203.0.113.1
 Egress Int           : -
 Source               : -
 DSCP                 : -
 Packet Size          : -
 Interval             : -
 Sample Size          : -
Latest Metrics
 Latency              : 1000ms
 Jitter               : 0ms
 Packet Loss          : 0.0%
Probe Details
 Probes Sent          : 3154
 Last Probe Sent      : 23 Mar 2018 03:36:00
 Last Probe Received : 23 Mar 2018 03:36:00
```

Table 35-2: Parameters in the output from **show linkmon probe**

| Parameter | Description |
|---|---|
| Name | The name of the probe. |
| Status | Whether the probe is enabled or disabled. If it is enabled, then the device will attempt to send probes if the link is up. If it is disabled, then no probes will be sent. |
| Type | The type of probe packet sent. |
| IP version | The IP version being used, IPv4 or IPv6. |
| Destination | The destination IP address that the probes are sent to. |
| Egress Interface | The interface that the probe packets should egress. |
| Source | The source IP address or interface. |
| DSCP | The DSCP value to use when sending the packet. |
| Packet Size | The size of a probe packet. |
| Interval | The number of milliseconds between sending out each probe. |
| Sample Size | The number of probe results to use when calculating the latency and jitter metrics. |
| Latency | The average latency based on the last **sample size** samples. |
| Jitter | The average jitter based on the last **sample size** samples. |
| Packet Loss | The percentage of packets lost based on the last 100 probes. |

Table 35-2: Parameters in the output from **show linkmon probe** (cont.)

| Parameter | Description |
|---|---|
| `Probes Sent` | The number of probe packets that have been sent. |
| `Last Probe Sent` | The time that the last probe packet was sent. |
| `Last Probe Received` | The time that the device last successfully received a probe packet. |

**Related commands**

linkmon probe

**Command changes**

Version 5.4.8-0.2: command added

# show linkmon probe-history

**Overview** Use this command to show information about Link Health Monitoring probe metric history collection instances.

**Syntax** `show linkmon probe-history [<1-65535>|probe <probe-name>]`

| Parameter | Description |
|---|---|
| *<1-65535>* | The ID of the collection instance to show history for. |
| *<probe-name>* | The name of the probe to show history for. |

**Mode** User Exec and Privileged Exec

**Example** To show all Link Health Monitoring probe history collection instances, use the following command:

```
awplus# show linkmon probe-history
```

To show a Link Health Monitoring probe history collection instance with the ID of '10', use the following command:

```
awplus# show linkmon probe-history 10
```

To show all Link Health Monitoring probe history collection instances that are using a probe named 'probe1', use the following command:

```
awplus# show linkmon probe-history probe probe1
```

**Output** Figure 35-3: Example output from **show linkmon probe-history**

```
awplus#show linkmon probe-history
-------------------------------------------------------------------
ID   Interval (s) Buckets  Latency (ms): Min        Max        Avg
Probe                       Jitter (ms): Min        Max        Avg
                                Packets:  Tx         Rx   Loss (%)
-------------------------------------------------------------------
10            1  300/300                94        105         99
PROBE1                                    2         11          6
                                       2978       2978       0.00
20            5  300/300                97        102         99
PROBE1                                    4          9          6
                                      14892      14892       0.00
30           10  300/300                98        101        100
PROBE1                                    5          8          6
                                      29785      29785       0.00
```

Table 35-3: Parameters in the output from **show linkmon probe-history**

| Parameter | Description |
|---|---|
| `ID` | The ID of the Link Health Monitoring probe-history. |
| `Probe` | The name of the probe that this history is for. |
| `Interval` | The amount of time between each history sample (in seconds). |
| `Buckets` | The total number of samples that are stored. |
| `Latency min` | The minimum latency that is in the history. |
| `Latency max` | The maximum latency that is in the history. |
| `Latency avg` | The average latency of the samples stored in the history. |
| `Jitter min` | The minimum jitter that is in the history. |
| `Jitter max` | The maximum jitter that is in the history. |
| `Jitter avg` | The average jitter of the samples stored in the history. |
| `Packets Tx` | The total number of packets transmitted in this history. |
| `Packets Rx` | The total number of packets received in this history. |
| `Packets Loss` | The percentage of packets lost in the history. |

**Related commands**

linkmon probe

linkmon probe-history

**Command changes**

Version 5.4.8-0.2: command added

# show pbr rules

**Overview** Use this command to display the configured IPv4 and IPv6 policy routes. It also shows the validity of the policy routes.

**Syntax**

```
show pbr rules
show pbr rules <rule-id>
show pbr rules profile <profile-name>
show pbr rules group <group-name>
```

| Parameter | Description |
|---|---|
| *<rule-id>* | The policy route ID. If you specify a policy route ID, the output only lists configuration and status for this specified rule. |
| *<profile-name>* | The Link Health Monitoring profile name. If you specify an existing Link Health Monitoring performance profile name, the output only lists profile configuration for this specified profile. |
| *<group-name>* | The Link Health Monitoring group name. If you specify an existing Link Health Monitoring group name, the output only lists group configuration for this specified profile. |

**Mode** User Exec and Privileged Exec

**Example** To show information about the policy routes, use the following command:

```
awplus# show pbr rules
```

To show information about the policy route rule with the rule ID of '1', use the following command:

```
awplus# show pbr rules 1
```

To show information about the Link Health Monitoring profile with the profile name of 'profile1', use the following command:

```
awplus# show pbr rules profile profile1
```

To show information about the Link Health Monitoring group with the profile name of 'group1', use the following command:

```
awplus# show pbr rules group group1
```

**Output** Figure 35-4: Example output from **show pbr rules**

```
awplus#show pbr rules
Statistics:
-------------------------------------------------------------------
Route table usage: 1/500
Total number of configured PBR-rules = 1
-------------------------------------------------------------------

PBR-Rule 1
-------------------------------------------------------------------
Active:                 Yes
Match:                  sip
From:                   LAN
To:                     any
Profile:                PROFILE1
  latency bad above:    300 ms
  latency good below:   - ms
  jitter bad above:     - ms
  jitter good below:    - ms
  pktloss bad above:    - %
  pktloss good below:   - %
Group:                  GROUP1
  Member:               10
    next-hop:           172.16.10.1
    probe:              PROBE10
    latency:            401 ms
    jitter:             0 ms
    pktloss:            0.0 %
  Member:               20
    next-hop:           172.16.20.1
    probe:              PROBE20
    latency:            400 ms
    jitter:             0 ms
    pktloss:            0.0 %
Last Change:
  Current Nexthop:      172.16.10.1
  Previous Nexthop:     -
  Change Time:          22 Nov 2017 13:57:48
  Causes:               Rx probe 'PROBE10', latency (401>300) ms
  Decision:             only available link
Change Count:           1
```

Figure 35-5: Example output from **show pbr rules 1**

```
awplus#show pbr rules 1
PBR-Rule 1
-------------------------------------------------------------------
Active:                Yes
Match:                 sip
From:                  LAN
To:                    any
Profile:               PROFILE1
  latency bad above:   300 ms
  latency good below:  - ms
  jitter bad above:    - ms
  jitter good below:   - ms
  pktloss bad above:   - %
  pktloss good below:  - %
Group:                 GROUP1
  Member:              10
    next-hop:          172.16.10.1
    probe:             PROBE10
    latency:           401 ms
    jitter:            0 ms
    pktloss:           0.0 %
  Member:              20
    next-hop:          172.16.20.1
    probe:             PROBE20
    latency:           400 ms
    jitter:            0 ms
    pktloss:           0.0 %
Last Change:
  Current Nexthop:     172.16.10.1
  Previous Nexthop:    -
  Change Time:         22 Nov 2017 13:57:48
  Causes:              Rx probe 'PROBE10', latency (401>300) ms
  Decision:            only available link
Change Count:          1
```

Figure 35-6: Example output from **show pbr rules profile profile1**

```
awplus#show pbr rules profile profile1
Profile:               profile1
  latency bad above:   300 ms
  latency good below:  - ms
  jitter bad above:    - ms
  jitter good below:   - ms
  pktloss bad above:   - %
  pktloss good below:  - %
```

Figure 35-7: Example output from **show pbr rules group group1**

```
awplus#show pbr rules group group1
Group:                  group1
  Member:               10
    next-hop:           172.16.10.1
    probe:              PROBE10
    latency:            401 ms
    jitter:             0 ms
    pktloss:            0.0 %
  Member:               20
    next-hop:           172.16.20.1
    probe:              PROBE20
    latency:            400 ms
    jitter:             0 ms
    pktloss:            0.0 %
```

Table 35-4: Parameters in the output from **show pbr rules**

| Parameter | Description |
|---|---|
| `Total number of configured PBR-rules` | The number of PBR rules currently configured.<br>This includes both conventional PBR policy-routes and Link Health Monitoring IP policy-routes, regardless of whether the rules are valid or not. |
| `PBR-Rule` | The PBR rule ID which the following statistics and configuration are associated with. |
| `Active` | Whether the rule is active or not. |
| `Match` | The name of an application.<br>Packets will be routed to the specified next hop if they match this application, come from the source entity, and are destined for the destination entity. |
| `From` | The name of the source entity.<br>Packets will be routed to the specified next hop if they match the application, come from this source entity, and are destined for the destination entity. |
| `To` | The name of the destination entity.<br>Packets will be routed to the specified next hop if they match the application, come from the source entity, and are destined for this destination entity. |
| `Profile` | The name of the Link Health Monitoring profile associated with this Link Health Monitoring PBR policy-route. |
| `bad above, good below` | The configured threshold for this specific rule. There are fields for latency, jitter, and packet loss. If this field has a value of "-", then the threshold has not been configured. |
| `Group` | The name of the Link Health Monitoring group associated with this Link Health Monitoring PBR policy-route. |

Table 35-4: Parameters in the output from **show pbr rules** (cont.)

| Parameter | Description |
|---|---|
| `Member` | The ID of the Link Health Monitoring member associated with this Link Health Monitoring group. |
| `Nexthop` | The IPv4 or IPv6 address of the next-hop or the egress interface. There can be up to 8 next-hops per policy route. |
| `probe` | The Link Health Monitoring probe associated with the Link Health Monitoring group member. |
| `latency` | The latency of the probe associated with the Link Health Monitoring member. |
| `jitter` | The jitter of the probe associated with the Link Health Monitoring member. |
| `packet loss` | The packet loss of the probe associated with the Link Health Monitoring member. |
| `Current Nexthop` | The chosen nexthop for traffic matching the Link Health Monitoring PBR policy-route. |
| `Previous Nexthop` | The previously chosen nexthop prior to failover. If a failover hasn't occurred on this setup, there is no previous nexthop. This is indicated by "-". |
| `Change Time` | The time at which the current nexthop was chosen. This will change if a failover occurs, or at boot. |
| `Causes` | The event that caused the last failover. |
| `Decision` | The reason why the current nexthop was chosen. |
| `Change Count` | The number of times the chosen nexthop has changed. This counter will increment any time a link failover occurs. |

**Related commands**

ip policy-route

ipv6 policy-route

policy-based-routing

show ip pbr route

show ipv6 pbr route

**Command changes**

Version 5.4.8-0.2: new parameters for profiles and groups added

Version 5.4.8-1.1: up to 500 route table entries supported

# show pbr rules brief

**Overview** Use this command to show a summary of all PBR rules. It also indicates, by the presence or absence of the nexthop field, which nexthop to route to.

**Syntax** `show pbr rules brief`

**Mode** User Exec and Privileged Exec

**Example** To show information about the policy routes, use the following command:

```
awplus# show pbr rules brief
```

**Output** Figure 35-8: Example output from **show pbr rules brief**

```
awplus#show pbr rules brief
Policy based routing is enabled
Route table usage: 2/500
* - No route table available for the rule - see "show ip pbr
route"
Rule Match    From            To                Valid  Nexthop
-----------------------------------------------------------------
10   any      entities.any    entities.outside  Yes    10.10.20.2
20   udp      any             any               Yes    2001:100::2
```

Table 35-5: Parameters in the output from **show pbr rules brief**

| Parameter | Description |
|---|---|
| Rule | The policy route ID number.<br>Policy routes are checked in order of ID number, starting with the lowest ID number. The device applies the policy route as soon as it finds a matching route; it does not check the remaining policy routes. |
| Match | The name of an application.<br>Packets will be routed to the specified next hop if they match this application, come from the source entity, and are destined for the destination entity. |
| From | The name of the source entity.<br>Packets will be routed to the specified next hop if they match the application, come from this source entity, and are destined for the destination entity. |
| To | The name of the destination entity.<br>Packets will be routed to the specified next hop if they match the application, come from the source entity, and are destined for this destination entity. |

Table 35-5: Parameters in the output from **show pbr rules brief** (cont.)

| Parameter | Description |
|---|---|
| `Valid` | Whether the application and entities are valid. |
| `Nexthop` | The IPv4 or IPv6 address of the next-hop or the egress interface. There can be up to 8 next-hops per policy route. |

**Related commands**

show pbr rules

**Command changes**

Version 5.4.8-0.2: command added

Version 5.4.8-1.1: up to 500 route table entries supported

# size (linkmon-probe)

**Overview** Use this command to set the size of the packets used by a Link Health Monitoring probe.

Use the **no** variant of this command to set the size back to the default.

**Syntax**

```
size <64-1500>
no size
```

| Parameter | Description |
|---|---|
| *<64-1500>* | The size of the probe packet in bytes. |

**Default** The default packet size is 100 bytes.

**Mode** Linkmon ICMP Probe Configuration

**Example** To set the size of a probe named 'probe1' to 1000, use the following commands:

```
awplus(config)# linkmon probe name probe1
awplus(config-linkmon-icmp-probe)# size 1000
```

To set the size of a probe named 'probe1' back to the default, use the following commands:

```
awplus(config)# linkmon probe name probe1
awplus(config-linkmon-icmp-probe)# no size
```

**Related commands** linkmon probe

**Command changes** Version 5.4.8-1.1: command added

# source (linkmon-probe)

**Overview** Use this command to set the source IP address or interface for a Link Health Monitoring probe.

Use the **no** variant of this command to return it to the default.

**Syntax**

```
source {<interface>|<ip-address>}
no source
```

| Parameter | Description |
|---|---|
| *<interface>* | The name of the interface that probes are sourcing from. The specified interface needs to be locally configured with at least one valid IPv4 address, and the interface is in up and running state. |
| *<ip-address>* | The source IPv4 address for this probe. The specified IP address needs to be locally configured on an interface that is in an up-and-running state. |

**Default** No source IP address is defined by default. The source IP address will be selected using standard routing behavior to reach the probe's destination.

**Mode** Linkmon ICMP Probe Configuration

**Example** To set the source interface as 'lo' for a probe named 'probe1', use the following commands:

```
awplus(config)# linkmon probe name probe1
awplus(config-linkmon-icmp-probe)# source lo
```

To set the source interface back to default for a probe named 'probe1', use the following commands:

```
awplus(config)# linkmon probe name probe1
awplus(config-linkmon-icmp-probe)# no source
```

**Related commands** linkmon probe

**Command changes** Version 5.4.8-1.1: command added

# url (linkmon-probe)

**Overview** Use this command to set the destination URL of a Link Health Monitoring probe. This is a required configuration option for http-get probes.

Use the **no** variant of this command to remove the URL.

**Syntax**

```
url <urlname>
no url
```

| Parameter | Description |
|---|---|
| *<urlname>* | The destination the probe is being sent to. The url must use ASCII characters and conform to the URL syntax in RFC 3986, with http or https protocol at the start and an optional port number on the end, such as :80, :443 or :8080. |

**Mode** Linkmon HTTP Probe Configuration

**Example** To set the destination URL of a Link Health Monitoring probe named "test-probe", use the following commands:

```
awplus# configure terminal
awplus(config)# linkmon probe name test-probe type http
awplus(config-linkmon-http-probe)# url
http://www.alliedtelesis.co.nz/
```

Some other examples of supported URL formats:

```
awplus(config-linkmon-http-probe)# url
https://www.facebook.com/
awplus(config-linkmon-http-probe)# url
http://intranet.atlnz.lc:8080
```

To remove the URL, use the following commands:

```
awplus# configure terminal
awplus(config)# linkmon probe name test-probe type http
awplus(config-linkmon-http-probe)# no url
```

**Related commands** linkmon probe

**Command changes** Version 5.4.8-1.1: command added

# Part 4: Multicast Applications

# 36 IGMP and IGMP Snooping Commands

## Introduction

**Overview**

Devices running AlliedWare Plus use IGMP (Internet Group Management Protocol) and MLD (Multicast Listener Discovery) to track which multicast groups their clients belong to. This enables them to send the correct multimedia streams to the correct destinations. IGMP is used for IPv4 multicasting, and MLD is used for IPv6 multicasting.

This chapter describes the commands to configure IGMP Querier behaviour and selection, IGMP Snooping and IGMP Proxy.

**Command List**


- "clear ip igmp" on page 1752
- "clear ip igmp group" on page 1753
- "clear ip igmp interface" on page 1754
- "debug igmp" on page 1755
- "ip igmp" on page 1756
- "ip igmp flood specific-query" on page 1757
- "ip igmp last-member-query-count" on page 1758
- "ip igmp last-member-query-interval" on page 1759
- "ip igmp maximum-groups" on page 1760
- "ip igmp mroute-proxy" on page 1762
- "ip igmp proxy-service" on page 1763
- "ip igmp querier-timeout" on page 1765
- "ip igmp query-holdtime" on page 1766
- "ip igmp query-interval" on page 1768
- "ip igmp query-max-response-time" on page 1770
- "ip igmp ra-option" on page 1772

- "ip igmp robustness-variable" on page 1773
- "ip igmp snooping" on page 1774
- "ip igmp snooping fast-leave" on page 1775
- "ip igmp snooping mrouter" on page 1776
- "ip igmp snooping querier" on page 1777
- "ip igmp snooping report-suppression" on page 1778
- "ip igmp snooping routermode" on page 1779
- "ip igmp snooping source-timeout" on page 1781
- "ip igmp snooping tcn query solicit" on page 1782
- "ip igmp source-address-check" on page 1784
- "ip igmp startup-query-count" on page 1785
- "ip igmp startup-query-interval" on page 1786
- "ip igmp trusted" on page 1787
- "ip igmp version" on page 1788
- "show debugging igmp" on page 1789
- "show ip igmp groups" on page 1790
- "show ip igmp interface" on page 1792
- "show ip igmp proxy" on page 1794
- "show ip igmp proxy groups" on page 1795
- "show ip igmp snooping mrouter" on page 1797
- "show ip igmp snooping routermode" on page 1798
- "show ip igmp snooping source-timeout" on page 1799
- "show ip igmp snooping statistics" on page 1800
- "undebug igmp" on page 1802

# clear ip igmp

**Overview** Use this command to clear all IGMP group membership records on all VLAN interfaces.

**Syntax**

```
clear ip igmp
```

**Mode** Privileged Exec

**Example**

```
awplus# clear ip igmp
```

**Related commands**

clear ip igmp group

clear ip igmp interface

show ip igmp interface

show running-config

**Command changes**

Version 5.4.7-1.1: VRF-lite support added SBx8100.

Version 5.4.8-1.1: VRF-lite support added x930, SBx908 GEN2.

# clear ip igmp group

**Overview**

Use this command to clear IGMP group membership records for a specific group on either all interfaces, a single interface, or for a range of interfaces.

**Syntax**

```
clear ip igmp group *
clear ip igmp group <ip-address> <interface>
```

| Parameter | Description |
|---|---|
| * | Clears all groups on all interfaces. This has the same effect as the **clear ip igmp** command. |
| *<ip-address>* | Specifies the group whose membership records will be cleared from all interfaces, entered in the form A.B.C.D. |
| *<interface>* | Specifies the name of the interface; all groups learned on this interface are deleted. |

**Mode**

Privileged Exec

**Usage notes**

This command applies to groups learned by IGMP or IGMP Snooping.

In addition to the group, an interface can be specified. Specifying this will mean that only entries with the group learned on the interface will be deleted.

**Examples**

To delete all group records, use the command:

```
awplus# clear ip igmp group *
```

To delete records for 224.1.1.1 on vlan1, use the command:

```
awplus# clear ip igmp group 224.1.1.1 vlan1
```

**Related commands**

clear ip igmp

clear ip igmp interface

show ip igmp interface

show running-config

**Command changes**

Version 5.4.7-1.1: VRF-lite support added SBx8100.

Version 5.4.8-1.1: VRF-lite support added x930, SBx908 GEN2.

# clear ip igmp interface

**Overview** Use this command to clear IGMP group membership records on a particular interface.

**Syntax**

```
clear ip igmp interface <interface>
```

| Parameter | Description |
|---|---|
| *<interface>* | Specifies the name of the interface. All groups learned on this interface are deleted. |

**Mode** Privileged Exec

**Usage notes** This command applies to interfaces configured for IGMP or IGMP Snooping.

**Example** To delete records for vlan1, use the command:

```
awplus# clear ip igmp interface vlan1
```

**Related commands**

clear ip igmp

clear ip igmp group

show ip igmp interface

show running-config

**Command changes**

Version 5.4.7-1.1: VRF-lite support added SBx8100.

Version 5.4.8-1.1: VRF-lite support added x930, SBx908 GEN2.

# debug igmp

**Overview**

Use this command to enable debugging of either all IGMP or a specific component of IGMP.

Use the **no** variant of this command to disable all IGMP debugging, or debugging of a specific component of IGMP.

**Syntax**

```
debug igmp {all|decode|encode|events|fsm|tib}
no debug igmp {all|decode|encode|events|fsm|tib}
```

| Parameter | Description |
|---|---|
| `all` | Enable or disable all debug options for IGMP |
| `decode` | Debug of IGMP packets that have been received |
| `encode` | Debug of IGMP packets that have been sent |
| `events` | Debug IGMP events |
| `fsm` | Debug IGMP Finite State Machine (FSM) |
| `tib` | Debug IGMP Tree Information Base (TIB) |

**Modes**

Privileged Exec and Global Configuration

**Example**

```
awplus# configure terminal
awplus(config)# debug igmp all
```

**Related commands**

show debugging igmp

undebug igmp

**Command changes**

Version 5.4.7-1.1: VRF-lite support added SBx8100.

Version 5.4.8-1.1: VRF-lite support added x930, SBx908 GEN2.

# ip igmp

**Overview**

Use this command to enable IGMP on an interface. The command configures the device as an IGMP querier.

Use the **no** variant of this command to return all IGMP related configuration to the default on this interface.

**Syntax**

```
ip igmp
no ip igmp
```

**Default**

Disabled

**Mode**

Interface Configuration for a VLAN or Eth interface.

**Usage notes**

An IP address must be assigned to the interface first, before this command will work.

**Example**

To specify an interface as an IGMP querier, use the commands:

```
awplus# configure terminal
awplus(config)# interface vlan2
awplus(config-if)# ip igmp
```

**Validation Commands**

show ip igmp interface

show running-config

# ip igmp flood specific-query

**Overview**

Use this command if you want IGMP to flood specific queries to all VLAN member ports, instead of only sending the queries to multicast group member ports.

Use the **no** variant of this command if you want IGMP to only send the queries to multicast group member ports.

**Syntax**

```
ip igmp flood specific-query
no ip igmp flood specific-query
```

**Default**

By default, specific queries are flooded to all VLAN member ports.

**Mode**

Global Configuration

**Usage**

In an L2 switched network running IGMP, it is considered more robust to flood all specific queries. In most cases, the benefit of flooding specific queries to all VLAN member ports outweighs the disadvantages.

However, sometimes this is not the case. For example, if hosts with very low CPU capability receive specific queries for multicast groups they are not members of, their performance may degrade unacceptably. In this situation, it is desirable for IGMP to send specific queries to known member ports only. This minimizes the performance degradation of such hosts. In those circumstances, use this command to turn off flooding of specific queries.

**Example**

To cause IGMP to flood specific queries only to multicast group member ports, use the commands:

```
awplus# configure terminal
awplus(config)# no ip igmp flood specific-query
```

**Related commands**

show ip igmp interface

**Command changes**

Version 5.4.7-1.1: VRF-lite support added SBx8100.

Version 5.4.8-1.1: VRF-lite support added x930, SBx908 GEN2.

# ip igmp last-member-query-count

**Overview** Use this command to set the last-member query-count value for an interface.

Use the **no** variant of this command to return to the default on an interface.

**Syntax**

```
ip igmp last-member-query-count <2-7>
no ip igmp last-member-query-count
```

| Parameter | Description |
|---|---|
| *<2-7>* | Last member query count value. |

**Default** The default last member query count value is 2.

**Mode** Interface Configuration for a VLAN or Eth interface.

**Usage notes** This command applies to Eth interfaces configured for IGMP and VLAN interfaces configured for IGMP or IGMP Snooping.

**Example** To set the last-member query-count to 3 on vlan2, use the commands:

```
awplus# configure terminal
awplus(config)# interface vlan2
awplus(config-if)# ip igmp last-member-query-count 3
```

**Related commands**

ip igmp last-member-query-interval

ip igmp startup-query-count

show ip igmp interface

show running-config

# ip igmp last-member-query-interval

**Overview** Use this command to configure the frequency at which the router sends IGMP group specific host query messages.

Use the **no** variant of this command to set this frequency to the default.

**Syntax**

```
ip igmp last-member-query-interval <interval>
no ip igmp last-member-query-interval
```

| Parameter | Description |
|---|---|
| *<interval>* | The frequency in milliseconds at which IGMP group-specific host query messages are sent, in the range 1000-25500. |

**Default** 1000 milliseconds

**Mode** Interface Configuration for a VLAN or Eth interface.

**Usage notes** This command applies to Eth interfaces configured for IGMP and VLAN interfaces configured for IGMP or IGMP Snooping.

**Example** To change the IGMP group-specific host query message interval to 2 seconds (2000 milliseconds) on vlan2, use the commands:

```
awplus# configure terminal
awplus(config)# interface vlan2
awplus(config-if)# ip igmp last-member-query-interval 2000
```

**Related commands**

ip igmp last-member-query-count

show ip igmp interface

show running-config

# ip igmp maximum-groups

**Overview** Use this command to set a limit, per switch port, on the number of IGMP groups clients can join. This stops a single client from using all the switch's available group-entry resources, and ensures that clients on all ports have a chance to join IGMP groups.

Use the **no** variant of this command to remove the limit.

**Syntax**

```
ip igmp maximum-groups <0-65535>
no ip igmp maximum-groups
```

| Parameter | Description |
|---|---|
| *<0-65535>* | The maximum number of IGMP groups clients can join on this switch port. 0 means no limit. |

**Default** The default is 0, which means no limit

**Mode** Interface mode for a switch port

**Usage notes** We recommend using this command with IGMP snooping fast leave on the relevant VLANs. To enable fast leave, use the command:

```
awplus(config-if)# ip igmp snooping fast-leave
```

The device keeps count of the number of groups learned by each port. This counter is incremented when group joins are received via IGMP reports. It is decremented when:

- Group memberships time out
- Group leaves are received via leave messages or reports

Also, the port's group counter is cleared when:

- The port goes down
- You run the command **clear ip igmp group** *
- The port is removed from a VLAN

You can see the current value of the group counter by using either of the commands:

```
awplus# show ip igmp snooping statistics interface <port-list>
awplus# show ip igmp interface <port>
```

**Example** To limit clients to 10 groups on port 1.0.1, which is in vlan1, use the commands:

```
awplus# configure terminal
awplus(config)# interface port1.0.1
awplus(config-if)# ip igmp maximum-groups 10
awplus(config-if)# exit
awplus(config)# interface vlan1
awplus(config-if)# ip igmp snooping fast-leave
```

**Related commands**

clear ip igmp group

ip igmp snooping fast-leave

show ip igmp interface

show ip igmp snooping statistics

# ip igmp mroute-proxy

**Overview**

Use this command to enable IGMP mroute proxy on this downstream interface and associate it with the upstream proxy service interface.

Use the **no** variant of this command to remove the association with the proxy-service interface.

**Syntax**

```
ip igmp mroute-proxy <interface>
no ip igmp mroute-proxy
```

| Parameter | Description |
|---|---|
| *<interface>* | The name of the interface. |

**Mode**

Interface Configuration for a VLAN or Eth interface.

**Usage notes**

This command applies to Eth interfaces and VLAN interfaces configured for IGMP Proxy.

You must also enable the IGMP proxy service on the upstream interface, using the ip igmp proxy-service command. You can associate one or more downstream mroute proxy interfaces on the device with a single upstream proxy service interface. This downstream mroute proxy interface listens for IGMP reports, and forwards them to the upstream IGMP proxy service interface.

IGMP Proxy does not work with other multicast routing protocols, such as PIM-SM or PIM-DM.

**Example**

To configure vlan2 as the upstream proxy-service interface for the downstream vlan3 interface, use the commands:

```
awplus# configure terminal
awplus(config)# interface vlan3
awplus(config-if)# ip igmp mroute-proxy vlan2
```

**Related commands**

ip igmp proxy-service

# ip igmp proxy-service

**Overview**

Use this command to enable the VLAN interface to be the upstream IGMP proxy-service interface for the device. All associated downstream IGMP mroute proxy interfaces on this device will have their memberships consolidated on this proxy service interface, according to IGMP host-side functionality.

Use the **no** variant of this command to remove the designation of the VLAN interface as an upstream proxy-service interface.

**Syntax**

```
ip igmp proxy-service
no ip igmp proxy-service
```

**Mode**

Interface Configuration for a VLAN or Eth interface.

**Usage notes**

This command applies to Eth interfaces and VLAN interfaces configured for IGMP Proxy.

This command is used with the ip igmp mroute-proxy command to enable forwarding of IGMP reports to a proxy service interface for all forwarding entries for this interface. You must also enable the downstream IGMP mroute proxy interfaces on this device using the command ip igmp mroute-proxy.

IGMP Proxy does not work with other multicast routing protocols, such as PIM-SM or PIM-DM.

From version 5.4.7-1.1 onwards, IGMP mroute proxy interfaces do not have to be configured with an IP address before they can operate. Instead, it is possible to have an address-less interface operate as an IGMP mroute proxy interface.

This feature is useful when IGMP Proxy needs to run on many downstream interfaces. For example, you may want to use it if your device has one subscriber (multicast receiver) per VLAN, and many receivers (many VLANs) connected to the device. In such a situation, assigning IP addresses to each VLAN may not be practicable.

Note that for such interface to be able to send queries to hosts directly attached to the interface, it is necessary to enable IGMP snooping querier on the interface, using the command ip igmp snooping querier.

**Example**

To designate VLAN1 as the upstream proxy-service interface, use the commands:

```
awplus# configure terminal
awplus(config)# interface vlan1
awplus(config-if)# ip igmp proxy-service
```

**Related commands**

ip igmp mroute-proxy

ip igmp snooping querier

**Command changes**

Version 5.4.7-1.1: Address-less interface support added.

Version 5.4.7-1.1: VRF-lite support added to SBx8100.

Version 5.4.8-1.1: VRF-lite support added to x930, SBx908 GEN2.

# ip igmp querier-timeout

**Overview**

Use this command to configure the timeout period before the device takes over as the querier for the interface after the previous querier has stopped querying.

Use the **no** variant of this command to restore the default.

**Syntax**

```
ip igmp querier-timeout <timeout>
no ip igmp querier-timeout
```

| Parameter | Description |
|---|---|
| *<timeout>* | IGMP querier timeout interval value in seconds, in the range 1-65535. |

**Default**

The default timeout interval is 255 seconds.

**Mode**

Interface Configuration for a VLAN or Eth interface.

**Usage notes**

This command applies to Eth and VLAN interfaces configured for IGMP.

The timeout value should not be less than the current active querier's general query interval.

**Example**

To configure the device to wait 130 seconds from the time it received the last query before it takes over as the querier for vlan2, use the commands:

```
awplus# configure terminal
awplus(config)# interface vlan2
awplus(config-if)# ip igmp querier-timeout 130
```

**Related commands**

ip igmp query-interval

show ip igmp interface

show running-config

# ip igmp query-holdtime

**Overview**

This command sets the time that an IGMP Querier waits after receiving a query solicitation before it sends an IGMP Query. IGMP General Query messages will not be sent during the hold time interval.

Use the **no** variant of this command to return to the default query hold time period.

**Syntax**

```
ip igmp query-holdtime <interval>
no ip igmp query-holdtime
```

| Parameter | Description |
|---|---|
| *<interval>* | Query interval value in milliseconds, in the range <100-5000>. |

**Default**

By default the delay before sending IGMP General Query messages is 500 milliseconds.

**Mode**

Interface Configuration for a VLAN or Eth interface.

**Usage notes**

Use this command to configure a value for the IGMP query hold time in the current network. IGMP Queries can be generated after receiving Query Solicitation (QS) packets and there is a possibility of a DoS (Denial of Service) attack if a stream of Query Solicitation (QS) packets are sent to the IGMP Querier, eliciting a rapid stream of IGMP Queries. This command applies to interfaces on which the device is acting as an IGMP Querier.

Use the ip igmp query-interval command when a delay for IGMP general query messages is required and IGMP general query messages are required. The **ip igmp query-holdtime** command stops IGMP query messages during the configured holdtime interval, so the rate of IGMP Queries that can be sent out of an interface can be restricted.

See the IGMP Feature Overview and Configuration Guide for introductory information about the Query Solicitation feature.

**Examples**

To set the IGMP query holdtime to 900 ms for vlan20, use the following commands:

```
awplus# configure terminal
awplus(config)# interface vlan20
awplus(config-if)# ip igmp query-holdtime 900
```

To reset the IGMP query holdtime to the default (500 ms) for vlan10, use the following commands:

```
awplus# configure terminal
awplus(config)# interface vlan10
awplus(config-if)# no ip igmp query-holdtime
```

**Related commands**

ip igmp query-interval

ip igmp snooping tcn query solicit

show ip igmp interface

show running-config

# ip igmp query-interval

**Overview** Use this command to configure the period for sending IGMP General Query messages.

The IGMP query interval specifies the time between IGMP General Query messages being sent.

Use the **no** variant of this command to return to the default query interval period.

***NOTE:*** *The IGMP query interval must be greater than IGMP query maximum response time.*

**Syntax**

```
ip igmp query-interval <interval>
no ip igmp query-interval
```

| Parameter | Description |
|---|---|
| `<interval>` | Query interval value in seconds, in the range `<2-18000>`. |

**Default** The default IGMP query interval is 125 seconds.

**Mode** Interface Configuration for a VLAN or Eth interface.

**Usage notes** This command applies to interfaces configured for IGMP. Note that the IGMP query interval is automatically set to a greater value than the IGMP query max response time.

For example, if you set the IGMP query max response time to 2 seconds using the ip igmp query-max-response-time command, and the IGMP query interval is currently less than 3 seconds, then the IGMP query interval period will be automatically reconfigured to be 3 seconds, so it is greater than the IGMP query maximum response time.

Use the **ip igmp query-interval** command when a non-default interval for IGMP General Query messages is required.

The ip igmp query-holdtime command can occasionally delay the sending of IGMP Queries.

**Examples** To set the period between IGMP host-query messages to 3 minutes (180 seconds) for vlan20, use the following commands:

```
awplus# configure terminal
awplus(config)# interface vlan20
awplus(config-if)# ip igmp query-interval 180
```

To reset the period between sending IGMP host-query messages to the default (125 seconds) for vlan10, use the following commands:

```
awplus# configure terminal
awplus(config)# interface vlan10
awplus(config-if)# no ip igmp query-interval
```

**Related commands**

ip igmp query-holdtime

ip igmp query-max-response-time

ip igmp startup-query-interval

show ip igmp interface

show running-config

# ip igmp query-max-response-time

**Overview**

Use this command to configure the maximum response time advertised in IGMP Queries.

Use the **no** variant of this command to restore the default.

***NOTE:*** *The IGMP query maximum response time must be less than the IGMP query interval.*

**Syntax**

```
ip igmp query-max-response-time <response-time>
no ip igmp query-max-response-time
```

| Parameter | Description |
|---|---|
| *<response-time>* | Response time value in seconds, in the range 1-3180. |

**Default**

The default IGMP query maximum response time is 10 seconds.

**Mode**

Interface Configuration for a VLAN or Eth interface.

**Usage notes**

This command applies to interfaces configured for IGMP.

Note that the IGMP query interval is automatically set to a greater value than the IGMP query maximum response time.

For example, if you set the IGMP query interval to 3 seconds using the ip igmp query-interval command, and the current IGMP query interval is less than 3 seconds, then the IGMP query maximum response time will be automatically reconfigured to be 2 seconds, so it is less than the IGMP query interval time.

To get the network to converge faster, use the **ip igmp query-max-response-time** command and set a low response time value, such as one or two seconds, so that the clients will respond immediately with a report as a response to the IGMP Queries.

**Examples**

To set a maximum response time of 8 seconds for vlan20, use the following commands:

```
awplus# configure terminal
awplus(config)# interface vlan20
awplus(config-if)# ip igmp query-max-response-time 8
```

To reset the default maximum response time to the default (10 seconds) for vlan10, use the following commands:

```
awplus# configure terminal
awplus(config)# interface vlan10
awplus(config-if)# no ip igmp query-max-response-time
```

**Related commands**

ip igmp query-interval

show ip igmp interface

show running-config

# ip igmp ra-option

**Overview** Use this command to enable strict Router Alert (RA) option validation. With strict RA option enabled, IGMP packets without RA options are ignored.

Use the **no** variant of this command to disable strict RA option validation.

**Syntax**

```
ip igmp ra-option
no ip igmp ra-option
```

**Default** The default state of RA validation is unset.

**Mode** Interface Configuration for a VLAN or Eth interface.

**Usage notes** This command applies to interfaces configured for IGMP and IGMP Snooping.

**Examples** To enable strict Router Alert (RA) option validation on vlan20, use the following commands:

```
awplus# configure terminal
awplus(config)# interface vlan20
awplus(config-if)# ip igmp ra-option
```

# ip igmp robustness-variable

**Overview** Use this command to change the robustness variable value on an interface.

Use the **no** variant of this command to return to the default on an interface.

**Syntax**

```
ip igmp robustness-variable <1-7>
no ip igmp robustness-variable
```

| Parameter | Description |
|---|---|
| *<1-7>* | The robustness variable value. |

**Default** The default robustness variable value is 2.

**Mode** Interface Configuration for a VLAN or Eth interface.

**Usage notes** This command applies to interfaces configured for IGMP and IGMP Snooping.

**Examples** To set the robustness variable to 3 on vlan20, use the following commands:

```
awplus# configure terminal
awplus(config)# interface vlan20
awplus(config-if)# ip igmp robustness-variable 3
```

**Related commands**

show ip igmp interface

show running-config

# ip igmp snooping

**Overview**

Use this command to enable IGMP Snooping. When this command is used in the Global Configuration mode, IGMP Snooping is enabled at the device level. When this command is used in Interface Configuration mode, IGMP Snooping is enabled for the specified VLANs.

Use the **no** variant of this command to either globally disable IGMP Snooping, or disable IGMP Snooping on a specified interface.

***NOTE:*** *IGMP snooping cannot be disabled on an interface if IGMP snooping has already been disabled globally. IGMP snooping can be disabled on both an interface and globally if disabled on the interface first and then disabled globally.*

**Syntax**

```
ip igmp snooping
no ip igmp snooping
```

**Default**

By default, IGMP Snooping is enabled both globally and on all VLANs.

**Mode**

Global Configuration and Interface Configuration for a VLAN interface.

**Usage notes**

For IGMP snooping to operate on particular VLAN interfaces, it must be enabled both globally by using this command in Global Configuration mode, and on individual VLAN interfaces by using this command in Interface Configuration mode (both are enabled by default.)

Both IGMP snooping and MLD snooping must be enabled globally on the device for IGMP snooping to operate. MLD snooping is also enabled by default. To enable it if it has been disabled, use the ipv6 mld snooping command in Global Configuration mode.

**Examples**

To enable IGMP Snooping on vlan2, use the commands:

```
awplus# configure terminal
awplus(config)# ip igmp snooping
awplus(config)# interface vlan2
awplus(config-if)# ip igmp snooping
```

**Related commands**

ipv6 mld snooping

show ip igmp interface

show running-config

# ip igmp snooping fast-leave

**Overview**

Use this command to enable IGMP Snooping fast-leave processing. Fast-leave processing is analogous to immediate-leave processing. The IGMP group-membership entry is removed as soon as an IGMP leave group message is received, without sending out a group-specific query.

Use the **no** variant of this command to disable fast-leave processing.

**Syntax**

```
ip igmp snooping fast-leave
no ip igmp snooping fast-leave
```

**Default**

IGMP Snooping fast-leave processing is disabled.

**Mode**

Interface Configuration for a VLAN interface.

**Usage notes**

This IGMP Snooping command can only be configured on VLAN interfaces.

**Example**

To enable fast-leave processing on vlan2, use the commands:

```
awplus# configure terminal
awplus(config)# interface vlan2
awplus(config-if)# ip igmp snooping fast-leave
```

**Related commands**

show ip igmp interface

show running-config

# ip igmp snooping mrouter

**Overview**

Use this command to statically configure the specified port as a multicast router port for IGMP Snooping for an interface. This command applies to interfaces configured for IGMP Snooping.

Use the **no** variant of this command to remove the static configuration of the port as a multicast router port.

**Syntax**

```
ip igmp snooping mrouter interface <port>
no ip igmp snooping mrouter interface <port>
```

| Parameter | Description |
|---|---|
| *<port>* | The port may be a device port (e.g. port1.0.2), a static channel group (e.g. sa3), or a dynamic (LACP) channel group (e.g. po4). |

**Mode**

Interface Configuration for a VLAN interface.

**Example**

To configure port1.0.2 statically as a multicast router interface for vlan2, use the commands:

```
awplus# configure terminal
awplus(config)# interface vlan2
awplus(config-if)# ip igmp snooping mrouter interface port1.0.2
```

**Related commands**

show ip igmp snooping mrouter

# ip igmp snooping querier

**Overview**

Use this command to enable IGMP querier operation when no multicast routing protocol is configured. When enabled, the IGMP Snooping querier sends out periodic IGMP queries for all interfaces. This command applies to interfaces configured for IGMP Snooping.

Use the **no** variant of this command to disable IGMP querier configuration.

**Syntax**

```
ip igmp snooping querier
no ip igmp snooping querier
```

**Mode**

Interface Configuration for a VLAN interface.

**Usage notes**

The IGMP Snooping querier uses the `0.0.0.0` Source IP address because it only masquerades as a proxy IGMP querier for faster network convergence.

It does not start, or automatically cease, the IGMP Querier operation if it detects query message(s) from a multicast router.

If an IP address is assigned to a VLAN, which has IGMP querier enabled on it, then the IGMP Snooping querier uses the VLAN's IP address as the Source IP Address in IGMP queries.

The IGMP Snooping Querier will not stop sending IGMP Queries if there is another IGMP Snooping Querier in the network with a lower Source IP Address.

***NOTE:*** *Do not enable the IGMP Snooping Querier feature on a Layer 2 device when there is an operational IGMP Querier in the network.*

**Example**

To configure vlan2 as a Snooping querier, use the commands:

```
awplus# configure terminal
awplus(config)# interface vlan2
awplus(config-if)# ip igmp snooping querier
```

**Related commands**

show ip igmp interface

show running-config

# ip igmp snooping report-suppression

**Overview**

Use this command to enable report suppression for IGMP versions 1 and 2. This command applies to interfaces configured for IGMP Snooping.

Report suppression stops reports being sent to an upstream multicast router port when there are already downstream ports for this group on this interface.

Use the **no** variant of this command to disable report suppression.

**Syntax**

```
ip igmp snooping report-suppression
no ip igmp snooping report-suppression
```

**Default**

Report suppression does not apply to IGMPv3, and is turned on by default for IGMPv1 and IGMPv2 reports.

**Mode**

Interface Configuration for a VLAN interface.

**Example**

To enable report suppression for IGMPv2 reports for vlan2, use the commands:

```
awplus# configure terminal
awplus(config)# interface vlan2
awplus(config-if)# ip igmp version 2
awplus(config-if)# ip igmp snooping report-suppression
```

**Related commands**

show ip igmp interface

show running-config

# ip igmp snooping routermode

**Overview** Use this command to set the destination IP addresses as router multicast addresses.

Use the **no** variant of this command to set it to the default. You can also remove a specified IP address from a custom list of multicast addresses.

**Syntax**

```
ip igmp snooping routermode
{all|default|ip|multicastrouter|address <ip-address>}
```

```
no ip igmp snooping routermode [address <ip-address>]
```

| Parameter | Description |
|---|---|
| `all` | All reserved multicast addresses (224.0.0.x).<br>Packets from all possible addresses in range 224.0.0.x are treated as coming from routers. |
| `default` | Default set of reserved multicast addresses.<br>Packets from 224.0.0.1, 224.0.0.2, 224.0.0.4, 224.0.0.5, 224.0.0.6, 224.0.0.9, 224.0.0.13, 224.0.0.15 and 224.0.0.24 are treated as coming from routers. |
| `ip` | Custom reserved multicast addresses.<br>Packets from custom IP address in the 224.0.0.x range are treated as coming from routers. |
| `multicastrouter` | Packets from DVMRP (224.0.0.4) and PIM (224.0.0.13) multicast addresses are treated as coming from routers. |
| `address <ip-address>` | Packets from the specified multicast address are treated as coming from routers. The address must be in the 224.0.0.x range. |

**Default** The default routermode is **default** (not **all**) and shows the following reserved multicast addresses:

```
Router mode............Def

Reserved multicast address
         224.0.0.1
         224.0.0.2
         224.0.0.4
         224.0.0.5
         224.0.0.6
         224.0.0.9
         224.0.0.13
         224.0.0.15
         224.0.0.24
```

**Mode** Global Configuration

**Examples**

To set **ip igmp snooping routermode** for all default reserved addresses enter:

```
awplus(config)# ip igmp snooping routermode default
```

To remove the multicast address 224.0.0.5 from the custom list of multicast addresses enter:

```
awplus(config)# no ip igmp snooping routermode address
224.0.0.5
```

**Related commands**

ip igmp trusted

show ip igmp snooping routermode

**Command changes**

Version 5.4.7-1.1: VRF-lite support added SBx8100.

Version 5.4.8-1.1: VRF-lite support added x930, SBx908 GEN2.

# ip igmp snooping source-timeout

**Overview**

Use this command to set the global IGMP Snooping source time-out value (in seconds) on the switch.

Use the **no** variant of this command to set the source time-out value to be the same as the group membership timeout.

**Syntax**

```
ip igmp snooping source-timeout <timeout>
no ip igmp snooping source-timeout <timeout>
```

| Parameter | Description |
|---|---|
| *<timeout>* | Time-out value in seconds *<0-86400>* |

**Default**

Global IGMP Snooping source-timeout is disabled by default, and unregistered multicast will be timed-out like normal entries.

Interface IGMP Snooping source timeout is disabled by default, and unregistered multicast will be timed-out like normal entries.

**Mode**

Interface/Global Configuration

**Usage notes**

The timeout determines how long unregistered multicast entries will be kept for. If the value '0' is specified, then effectively all unregistered multicast entries will never be timed out, and can only be cleared by using the command **clear ip igmp group**. The interface settings will always take precedence over the global setting.

**Example**

To configure IGMP Snooping source timeout on 'vlan1', use the commands:

```
awplus# configure terminal
awplus(config)# interface vlan1
awplus(config-if)# ip igmp snooping source-timeout 200
```

**Related commands**

show ip igmp snooping source-timeout

# ip igmp snooping tcn query solicit

**Overview**

Use this command to enable IGMP (Internet Group Management Protocol) Snooping TCN (Topology Change Notification) Query Solicitation feature. When this command is used in the Global Configuration mode, Query Solicitation is enabled.

Use the **no** variant of this command to disable IGMP Snooping TCN Query Solicitation. When the **no** variant of this command is used in Interface Configuration mode, this overrides the Global Configuration mode setting and Query Solicitation is disabled.

**Syntax**

```
ip igmp snooping tcn query solicit
no ip igmp snooping tcn query solicit
```

**Default**

IGMP Snooping TCN Query Solicitation is disabled by default on the device, unless the device is the Master Node in an EPSR ring, or is the Root Bridge in a Spanning Tree.

When the device is the Master Node in an EPSR ring, or the device is the Root Bridge in a Spanning Tree, then IGMP Snooping TCN Query Solicitation is enabled by default and cannot be disabled using the Global Configuration mode command. However, Query Solicitation can be disabled for specified interfaces using the **no** variant of this command from the Interface Configuration mode.

**Mode**

Global Configuration, and Interface Configuration for a VLAN interface.

**Usage notes**

Once enabled, if the device is not an IGMP Querier, on detecting a topology change, the device generates IGMP Query Solicit messages that are sent to all the ports of the vlan configured for IGMP Snooping on the device.

On a device that is not the Master Node in an EPSR ring or the Root Bridge in a Spanning Tree, Query Solicitation can be disabled using the **no** variant of this command after being enabled.

If the device that detects a topology change is an IGMP Querier then the device will generate an IGMP Query message.

Note that the **no** variant of this command when issued in Global Configuration mode has no effect on a device that is the Master Node in an EPSR ring or on a device that is a Root Bridge in a Spanning Tree. Query Solicitation is not disabled for the device these instances. However, Query Solicitation can be disabled on a per-vlan basis from the Interface Configuration mode.

See the following state table that shows when Query Solicit messages are sent in these instances:

| Command issued from Global Configuration | Command issued from Interface Configuration | Device is STP Root Bridge or the EPSR Master Node | IGMP Query Solicit message sent on VLAN |
|---|---|---|---|
| No | Yes | Yes | Yes |
| Yes | No | Yes | No |
| Yes | Yes | Yes | Yes |

See the IGMP Feature Overview and Configuration Guide for introductory information about the Query Solicitation feature.

**Examples**

To enable Query Solicitation on a device, use the commands:

```
awplus# configure terminal
awplus(config)# ip igmp snooping tcn query solicit
```

To disable Query Solicitation on a device, use the commands:

```
awplus# configure terminal
awplus(config)# no ip igmp snooping tcn query solicit
```

To enable Query Solicitation for vlan2, use the commands:

```
awplus# configure terminal
awplus(config)# interface vlan2
awplus(config-if)# ip igmp snooping tcn query solicit
```

To disable Query Solicitation for vlan2, use the commands:

```
awplus# configure terminal
awplus(config)# interface vlan2
awplus(config-if)# no ip igmp snooping tcn query solicit
```

**Related commands**

ip igmp query-holdtime

show ip igmp interface

show running-config

**Command changes**

Version 5.4.7-1.1: VRF-lite support added SBx8100.

Version 5.4.8-1.1: VRF-lite support added x930, SBx908 GEN2.

# ip igmp source-address-check

**Overview**

This command enables the checking of the Source Address for an IGMP Report, rejecting any IGMP Reports originating on devices outside of the local subnet.

Use the **no** variant of this command to disable the checking of the Source Address for an IGMP Report, which allows IGMP Reports from devices outside of the local subnet.

**Syntax**

```
ip igmp source-address-check
no ip igmp source-address-check
```

**Default**

Source address checking for IGMP Reports is enabled by default.

**Mode**

Interface Configuration for a VLAN or Eth interface.

**Usage notes**

This is a security feature, and should be enabled unless IGMP Reports from outside the local subnet are expected, for example, if Multicast VLAN Registration is active in the network.

The no variant of this command is required to disable the IGMP Report source address checking feature in networks that use Multicast VLAN Registration to allow IGMP Reports from devices outside of the local subnet.

**Examples**

To deny IGMP Reports from outside the current subnet for vlan20, use the following commands:

```
awplus# configure terminal
awplus(config)# interface vlan20
awplus(config-if)# ip igmp source-address-check
```

To allow IGMP Reports from outside the current subnet for vlan10, use the following commands:

```
awplus# configure terminal
awplus(config)# interface vlan10
awplus(config-if)# no ip igmp source-address-check
```

**Validation Commands**

show ip igmp interface

show running-config

# ip igmp startup-query-count

**Overview**

Use this command to configure the IGMP startup query count for an interface. The IGMP startup query count is the number of IGMP General Query messages sent by a querier at startup. The default IGMP startup query count is 2.

Use the **no** variant of this command to return an interface's configured IGMP startup query count to the default.

**Syntax**

```
ip igmp startup-query-count <startup-query-count>
no ip igmp startup-query-count
```

| Parameter | Description |
|---|---|
| *<startup-query-count>* | Specify the IGMP startup query count, in the range 2-10. |

**Default**

The default IGMP startup query count is 2.

**Mode**

Interface Configuration for a VLAN or Eth interface.

**Example**

To set the IGMP startup query count to 4 on vlan2, use the commands:

```
awplus# configure terminal
awplus(config)# interface vlan2
awplus(config-if)# ip igmp startup-query-count 4
```

**Related commands**

ip igmp last-member-query-count

ip igmp startup-query-interval

# ip igmp startup-query-interval

**Overview**

Use this command to configure the IGMP startup query interval for an interface. The IGMP startup query interval is the amount of time in seconds between successive IGMP General Query messages sent by a querier during startup. The default IGMP startup query interval is one quarter of the IGMP query interval value.

Use the **no** variant of this command to return an interface's configured IGMP startup query interval to the default.

**Syntax**

```
ip igmp startup-query-interval <startup-query-interval>
no ip igmp startup-query-interval
```

| Parameter | Description |
|---|---|
| *<startup-query-interval>* | Specify the IGMP startup query interval, in the range of 2-1800 seconds. The value must be one quarter of the IGMP query interval value. |

**Default**

The default IGMP startup query interval is one quarter of the IGMP query interval value.

***NOTE:*** *The IGMP startup query interval must be one quarter of the IGMP query interval.*

**Mode**

Interface Configuration for a VLAN or Eth interface.

**Example**

To set the IGMP startup query interval to 15 seconds for vlan2, which is one quarter of the IGMP query interval of 60 seconds, use the commands:

```
awplus# configure terminal
awplus(config)# interface vlan2
awplus(config-if)# ip igmp query-interval 60
awplus(config-if)# ip igmp startup-query-interval 15
```

**Related commands**

ip igmp last-member-query-interval

ip igmp query-interval

ip igmp startup-query-count

# ip igmp trusted

**Overview** Use this command to allow IGMP to process packets received on certain trusted ports only.

Use the **no** variant of this command to stop IGMP from processing specified packets if the packets are received on the specified ports or aggregator.

**Syntax**

```
ip igmp trusted {all|query|report|routermode}
no ip igmp trusted {all|query|report|routermode}
```

| Parameter | Description |
|---|---|
| `all` | Specifies whether or not the interface is allowed to receive all IGMP and other routermode packets |
| `query` | Specifies whether or not the interface is allowed to receive IGMP queries |
| `report` | Specifies whether or not the interface is allowed to receive IGMP membership reports |
| `routermode` | Specifies whether or not the interface is allowed to receive routermode packets |

**Default** By default, all ports and aggregators are trusted interfaces, so IGMP is allowed to process all IGMP query, report, and router mode packets arriving on all interfaces.

**Mode** Interface mode for one or more switch ports or aggregators

**Usage** Because all ports are trusted by default, use this command in its **no** variant to stop IGMP processing packets on ports you do not trust.

For example, you can use this command to make sure that only ports attached to approved IGMP routers are treated as router ports.

**Example** To stop ports port1.0.3-port1.0.6 from being treated as router ports by IGMP, use the commands:

```
awplus(config)# interface port1.0.3-port1.0.6
awplus(config-if)# no ip igmp trusted routermode
```

**Related commands** ip igmp snooping routermode

# ip igmp version

**Overview** Use this command to set the current IGMP version (IGMP version 1, 2 or 3) on an interface.

Use the **no** variant of this command to return to the default version.

**Syntax**

```
ip igmp version <1-3>
no ip igmp version
```

| Parameter | Description |
|---|---|
| `version <1-3>` | IGMP protocol version number |

**Default** The default IGMP version is 3.

**Mode** Interface Configuration for a VLAN or Eth interface.

**Example** To set the IGMP version to 2 for vlan2, use the commands:

```
awplus# configure terminal
awplus(config)# interface vlan2
awplus(config-if)# ip igmp version 2
```

**Related commands** show ip igmp interface

# show debugging igmp

**Overview** Use this command to see what debugging is turned on for IGMP.

For information on filtering and saving command output, see the "Getting Started with AlliedWare Plus" Feature Overview and Configuration Guide.

**Syntax**

```
show debugging igmp
```

**Mode** User Exec and Privileged Exec

**Example** To display the IGMP debugging options set, enter the command:

```
awplus# show debugging igmp
```

**Output** Figure 36-1: Example output from the **show debugging igmp** command

```
IGMP Debugging status:
  IGMP Decoder debugging is on
  IGMP Encoder debugging is on
  IGMP Events debugging is on
  IGMP FSM debugging is on
  IGMP Tree-Info-Base (TIB) debugging is on
```

**Related commands** debug igmp

**Command changes** Version 5.4.7-1.1: VRF-lite support added SBx8100.

Version 5.4.8-1.1: VRF-lite support added x930, SBx908 GEN2.

# show ip igmp groups

**Overview** Use this command to display the multicast groups with receivers directly connected to the router, and learned through IGMP.

For information on filtering and saving command output, see the "Getting Started with AlliedWare Plus" Feature Overview and Configuration Guide.

**Syntax**

```
show ip igmp groups [<ip-address>|<interface> detail | brief]
```

| Parameter | Description |
|---|---|
| `<ip-address>` | Address of the multicast group, entered in the form A.B.C.D. |
| `<interface>` | Interface name for which to display local information. |
| `brief` | Brief display of all interfaces |

**Mode** User Exec and Privileged Exec

**Example** The following command displays local-membership information for all ports in all interfaces:

```
awplus# show ip igmp groups
```

**Output** Figure 36-2: Example output from **show ip igmp groups**

```
IGMP Connected Group Membership
Group Address    Interface       Uptime    Expires   Last Reporter
224.0.1.1        port1.0.1       00:00:09  00:04:17  10.10.0.82
224.0.1.24       port1.0.2       00:00:06  00:04:14  10.10.0.84
...
```

Table 36-1: Parameters in the output of **show ip igmp groups**

| Parameter | Description |
|---|---|
| `Group Address` | Address of the multicast group. |
| `Interface` | Port through which the group is reachable. |
| `Uptime` | The time in weeks, days, hours, minutes, and seconds that this multicast group has been known to the device. |
| `Expires` | Time (in hours, minutes, and seconds) until the entry expires. |
| `Last Reporter` | Last host to report being a member of the multicast group. |

**Command changes**

Version 5.4.7-1.1: VRF-lite support added SBx8100.

Version 5.4.8-1.1: VRF-lite support added x930, SBx908 GEN2.

Version 5.4.8-2.3: **brief** parameter added.

# show ip igmp interface

**Overview** Use this command to display the state of IGMP, IGMP Proxy service, and IGMP Snooping for a specified VLAN, or all VLANs. IGMP is shown as Active or Disabled in the show output. You can also display the number of groups a switch port belongs to.

For information on filtering and saving command output, see the "Getting Started with AlliedWare Plus" Feature Overview and Configuration Guide.

**Syntax** `show ip igmp interface [<interface>]`

| Parameter | Description |
|---|---|
| *<interface>* | The name of the interface.<br>If you specify a switch port number, the output displays the number of groups the port belongs to, and the port's group membership limit, if a limit has been set (with the command ip igmp maximum-groups). |

**Mode** User Exec and Privileged Exec

**Output** The following output shows IGMP interface status for vlan2 with IGMP Snooping enabled:

```
awplus#show ip igmp interface vlan2
Interface vlan2 (Index 202)
 IGMP Disabled, Inactive, Version 3 (default)
 IGMP interface has 0 group-record states
 IGMP activity: 0 joins, 0 leaves
 IGMP robustness variable is 2
 IGMP last member query count is 2
 IGMP query interval is 125 seconds
 IGMP query holdtime is 500 milliseconds
 IGMP querier timeout is 255 seconds
 IGMP max query response time is 10 seconds
 Last member query response interval is 1000 milliseconds
 Group Membership interval is 260 seconds
 Strict IGMPv3 ToS checking is disabled on this interface
 Source Address checking is enabled
 IGMP Snooping is globally enabled
 IGMP Snooping query solicitation is globally disabled
  Num. query-solicit packets: 57 sent, 0 recvd
 IGMP Snooping is enabled on this interface
 IGMP Snooping fast-leave is not enabled
 IGMP Snooping querier is not enabled
 IGMP Snooping report suppression is enabled
```

The following output shows IGMP interface status for vlan2 with IGMP Snooping disabled:

```
awplus#show ip igmp interface vlan2
Interface vlan2 (Index 202)
 IGMP Disabled, Inactive, Version 3 (default)
 IGMP interface has 0 group-record states
 IGMP activity: 0 joins, 0 leaves
 IGMP robustness variable is 2
 IGMP last member query count is 2
 IGMP query interval is 125 seconds
 IGMP query holdtime is 500 milliseconds
 IGMP querier timeout is 255 seconds
 IGMP max query response time is 10 seconds
 Last member query response interval is 1000 milliseconds
 Group Membership interval is 260 seconds
 Strict IGMPv3 ToS checking is disabled on this interface
 Source Address checking is enabled
 IGMP Snooping is globally enabled
 IGMP Snooping query solicitation is globally disabled
  Num. query-solicit packets: 57 sent, 0 recvd
 IGMP Snooping is not enabled on this interface
 IGMP Snooping fast-leave is not enabled
 IGMP Snooping querier is not enabled
 IGMP Snooping report suppression is enabled
```

The following output displays membership information for port1.0.1:

```
awplus#show ip igmp interface port1.0.1
IGMP information for port1.0.1
    Maximum groups limit set: 10
    Number of groups port belongs to: 0
```

**Command changes**

Version 5.4.7-1.1: VRF-lite support added SBx8100.

Version 5.4.8-1.1: VRF-lite support added x930, SBx908 GEN2.

# show ip igmp proxy

**Overview** Use this command to display the state of IGMP Proxy services for a specified interface or for all interfaces.

For information on filtering and saving command output, see the "Getting Started with AlliedWare Plus" Feature Overview and Configuration Guide.

**Syntax**

```
show ip igmp proxy
```

**Mode** User Exec and Privileged Exec

**Example** To display the state of IGMP Proxy services for all interfaces, enter the command:

```
awplus# show ip igmp proxy
```

**Output** Figure 36-3: Example output from **show ip igmp proxy**

```
awplus#show ip igmp proxy
Interface vlan40 (Index 340)
Administrative status: enabled
Operational status: up
Upstream interface is vlan30
Number of multicast groups: 1
```

**Related commands** ip igmp proxy-service

# show ip igmp proxy groups

**Overview** Use this command to display multicast groups with receivers directly connected to the router, learned through IGMP, which use a proxy service. You can also use a filter to specify a multicast group IP address and /or interface.

For information on filtering and saving command output, see the "Getting Started with AlliedWare Plus" Feature Overview and Configuration Guide.

**Syntax**

```
show ip igmp proxy groups [detail]
show ip igmp proxy groups <multicast-group> [detail]
show ip igmp proxy groups <vlan> [detail]
show ip igmp proxy groups <vlan> <multicast-group> [detail]
```

| Parameter | Description |
|---|---|
| `groups` | Specify IGMP proxy group membership information. |
| `detail` | Specify detailed IGMPv3 source information. |
| `<vlan>` | Specify the name of a single VLAN interface, for example **vlan1**. |
| `<multicast-group>` | Specify the IPv4 address in of the multicast group, in the format A.B.C.D. |

**Mode** User Exec

**Example** To display local membership information for IGMP proxy service interfaces, use the command:

```
awplus# show ip igmp proxy groups
```

**Output** Figure 36-4: Example output from **show ip igmp proxy groups**

```
awplus#show ip igmp proxy groups
IGMP Connected Proxy Group Membership
Group Address    Interface            Member state
224.9.10.11      vlan10               Delay
```

**Example** To display local membership information for IGMP proxy service interfaces, use the command:

```
awplus# show ip igmp proxy groups detail
```

**Output** Figure 36-5: Example output from **show ip igmp proxy groups detail**

```
awplus#show ip igmp proxy groups detail
Interface:      vlan10
Group:          224.9.10.11
Group mode:     Exclude
Member state:   Delay
Source list is empty

Summary :
IGMP Connected Proxy Group Membership
Group Address    Interface            Member state
224.9.10.11      vlan10               DelayDetail :
Interface:       vlan10
Group:           224.9.10.11
Group mode:      Exclude
Member state:    Delay
Source list is empty
```

Table 36-2: Parameters in the output of **show ip igmp proxy groups**

| Parameter | Description |
|---|---|
| `Interface` | The interface that received the IGMP report. |
| `Group` | The multicast group address that has been requested by the IGMP report. |
| `Group mode` | **Include**mode indicates that the multicast receiver has sent an IGMPv3 report for a group with a list of addresses that it wants to receive traffic from.<br>**Exclude** mode indicates that the multicast receiver has sent an IGMPv3 report for a group with a list of addresses that it does not want to receive traffic from. |
| `Member state` | **Delay** indicates that no group or source query timers are running for the specified group, otherwise the member state is shown as **Idle**. |

**Related commands** show ip igmp proxy

**Command changes** Version 5.4.7-1.1: VRF-lite support added SBx8100.

Version 5.4.8-1.1: VRF-lite support added x930, SBx908 GEN2.

# show ip igmp snooping mrouter

**Overview**

Use this command to display the multicast router ports, both static and dynamic, in a VLAN.

For information on filtering and saving command output, see the "Getting Started with AlliedWare Plus" Feature Overview and Configuration Guide.

**Syntax**

```
show ip igmp snooping mrouter [interface <interface>]
```

| Parameter | Description |
|---|---|
| `interface` | A specific interface. |
| `<interface>` | The name of the VLAN interface. |

**Mode**

User Exec and Privileged Exec

**Example**

To show all multicast router interfaces, use the command:

```
awplus# show ip igmp snooping mrouter
```

To show the multicast router interfaces in `vlan1`, use the command:

```
awplus# show ip igmp snooping mrouter interface vlan1
```

**Output**

Figure 36-6: Example output from **show ip igmp snooping mrouter**

```
VLAN     Interface    Static/Dynamic
1        port1.0.1    Statically configured
200      port1.0.2    Statically configured
```

Figure 36-7: Example output from **show ip igmp snooping mrouter interface vlan1**

```
VLAN     Interface    Static/Dynamic
1        port1.0.1    Statically configured
```

**Related commands**

ip igmp snooping mrouter

**Command changes**

Version 5.4.7-1.1: VRF-lite support added SBx8100.

Version 5.4.8-1.1: VRF-lite support added x930, SBx908 GEN2.

# show ip igmp snooping routermode

**Overview**

Use this command to display the current router mode and the list of IP addresses set as router multicast addresses from the ip igmp snooping routermode command.

For information on filtering and saving command output, see the "Getting Started with AlliedWare Plus" Feature Overview and Configuration Guide.

**Syntax**

```
show ip igmp snooping routermode
```

**Mode**

User Exec and Privileged Exec

**Example**

To show the router mode and the list of router multicast addresses, use the command:

```
awplus# show ip igmp snooping routermode
```

**Output**

Figure 36-8: Example output from **show ip igmp snooping routermode**

```
awplus#show ip igmp snooping routermode
Router mode............Def
Reserved multicast address

         224.0.0.1
         224.0.0.2
         224.0.0.4
         224.0.0.5
         224.0.0.6
         224.0.0.9
         224.0.0.13
         224.0.0.15
         224.0.0.24
```

**Related commands**

ip igmp snooping routermode

**Command changes**

Version 5.4.7-1.1: VRF-lite support added SBx8100.

Version 5.4.8-1.1: VRF-lite support added x930, SBx908 GEN2.

# show ip igmp snooping source-timeout

**Overview** Use this command to display the configured IGMP snooping source timeouts for a specified VLAN or VLAN range.

**Syntax**

```
show ip igmp snooping source-timeout [interface|
<interface-range>]
```

| Parameter | Description |
|---|---|
| *<interface-range>* | The name of the VLAN interface or VLAN range |

**Mode** Privileged Exec

**Example** To display the configured IGMP snooping source timeouts for all VLANs, use the command:

```
awplus# show ip igmp snooping source-timeout
```

**Output** Figure 36-9: Example output from **show ip igmp snooping source-timeout**

```
awplus#show ip igmp snooping source-timeout
Global IGMP snooping source-timeout is enabled (60 secs)

vlan1           enabled (300 secs)
vlan2           inherits global setting
vlan1000        inherits global settingawplus#show ip igmp
snooping source-timeout int vlan1
Global IGMP snooping source-timeout is enabled (60 secs)vlan1
enabled (300 secs)
```

**Related commands** ip igmp snooping source-timeout

**Command changes** Version 5.4.7-1.1: VRF-lite support added SBx8100.

Version 5.4.8-1.1: VRF-lite support added x930, SBx908 GEN2.

# show ip igmp snooping statistics

**Overview** Use this command to display IGMP Snooping statistics data.

For information on filtering and saving command output, see the "Getting Started with AlliedWare Plus" Feature Overview and Configuration Guide.

**Syntax**

```
show ip igmp snooping statistics interface <interface-range>
[group [<ip-address>]]
```

| Parameter | Description |
|---|---|
| *<ip-address>* | Optionally specify the address of the multicast group, entered in the form A.B.C.D. |
| *<interface>* | Specify the name of the interface or interface range. If you specify a port number, the output displays the number of groups the port belongs to, and the port's group membership limit, if a limit has been set (with the command ip igmp maximum-groups) |

**Mode** Privileged Exec

**Example** To display IGMP statistical information for **vlan1** and **vlan2**, use the command:

```
awplus# show ip igmp snooping statistics interface vlan1-vlan2
```

**Output** Figure 36-10: Example output from the **show ip igmp snooping statistics** command for VLANs

```
awplus#show ip igmp interface vlan1-vlan2
IGMP Snooping statistics for vlan1
Interface:      port1.0.1
Group:          224.1.1.1
Uptime:         00:00:09
Group mode:     Exclude (Expires: 00:04:10)
Last reporter:  10.4.4.5
Source list is empty
IGMP Snooping statistics for vlan2
Interface:      port1.0.2
Group:          224.1.1.2
Uptime:         00:00:19
Group mode:     Exclude (Expires: 00:05:10)
Last reporter:  10.4.4.6
Source list is empty
```

Figure 36-11: Example output from the **show ip igmp snooping statistics** command for a switch port

```
awplus#show ip igmp interface port1.0.1
IGMP information for port1.0.1
    Maximum groups limit set: 10
    Number of groups port belongs to: 0
```

**Command changes**

Version 5.4.7-1.1: VRF-lite support added SBx8100.

Version 5.4.8-1.1: VRF-lite support added x930, SBx908 GEN2.

# undebug igmp

**Overview** This command applies the functionality of the no debug igmp command.

# 37 MLD and MLD Snooping Commands

## Introduction

**Overview**

This chapter provides an alphabetical reference of configuration, clear, and show commands related to MLD and MLD Snooping.

The Multicast Listener Discovery (MLD) module includes the MLD Proxy service and MLD Snooping functionality. Some of the following commands may have commonalities and restrictions; these are described under the Usage section for each command.

MLD and MLD Snooping commands only apply to switch ports, not Ethernet interfaces.

Before using PIM-SMv6:

- IPv6 must be enabled on an interface (ipv6 enable),
- IPv6 forwarding must be enabled globally for routing IPv6 (ipv6 forwarding), and
- IPv6 multicasting must be enabled globally (ipv6 multicast-routing).

**Command List**


- "clear ipv6 mld" on page 1805
- "clear ipv6 mld group" on page 1806
- "clear ipv6 mld interface" on page 1807
- "debug mld" on page 1808
- "ipv6 mld" on page 1809
- "ipv6 mld last-member-query-count" on page 1810
- "ipv6 mld last-member-query-interval" on page 1811
- "ipv6 mld querier-timeout" on page 1812
- "ipv6 mld query-interval" on page 1813
- "ipv6 mld query-max-response-time" on page 1814
- "ipv6 mld robustness-variable" on page 1815

- "ipv6 mld snooping" on page 1816
- "ipv6 mld snooping fast-leave" on page 1818
- "ipv6 mld snooping mrouter" on page 1819
- "ipv6 mld snooping querier" on page 1821
- "ipv6 mld snooping report-suppression" on page 1822
- "ipv6 mld ssm-map enable" on page 1824
- "ipv6 mld static-group" on page 1825
- "ipv6 mld version" on page 1827
- "show debugging mld" on page 1828
- "show ipv6 mld groups" on page 1829
- "show ipv6 mld interface" on page 1830
- "show ipv6 mld snooping mrouter" on page 1831
- "show ipv6 mld snooping statistics" on page 1832

# clear ipv6 mld

**Overview** Use this command to clear all MLD local memberships on all interfaces.

**Syntax**
```
clear ipv6 mld
```

**Mode** Privileged Exec

**Usage** This command applies to interfaces configured for MLD Layer-3 multicast protocols and learned by MLD Snooping.

**Example**
```
awplus# clear ipv6 mld
```

**Related commands**
clear ipv6 mld group
clear ipv6 mld interface

# clear ipv6 mld group

**Overview** Use this command to clear MLD specific local-membership(s) on all interfaces, for a particular group.

**Syntax**

```
clear ipv6 mld group {*|<ipv6-address>}
```

| Parameter | Description |
|---|---|
| * | Clears all groups on all interfaces. This is an alias to the clear ipv6 mld command. |
| *<ipv6-address>* | Specify the group address for which MLD local-memberships are to be cleared from all interfaces.<br>Specify the IPv6 multicast group address in the format in the format X:X::X:X. |

**Mode** Privileged Exec

**Usage** This command applies to interfaces configured for MLD Layer-3 multicast protocols and learned by MLD Snooping.

**Example**

```
awplus# clear ipv6 mld group *
```

**Related commands**

clear ipv6 mld

clear ipv6 mld interface

# clear ipv6 mld interface

**Overview** Use this command to clear MLD interface entries.

**Syntax**

```
clear ipv6 mld interface <interface>
```

| Parameter | Description |
|---|---|
| *<interface>* | Specifies name of the interface; all groups learned from this interface are deleted. |

**Mode** Privileged Exec

**Usage** This command applies to interfaces configured for MLD Layer-3 multicast protocols and learned by MLD Snooping.

**Example**

```
awplus# clear ipv6 mld interface vlan2
```

**Related commands**

clear ipv6 mld

clear ipv6 mld group

# debug mld

**Overview**

Use this command to enable all MLD debugging modes, or a specific MLD debugging mode.

Use the **no** variant of this command to disable all MLD debugging modes, or a specific MLD debugging mode.

**Syntax**

```
debug mld {all|decode|encode|events|fsm|tib}
no debug mld {all|decode|encode|events|fsm|tib}
```

| Parameter | Description |
|---|---|
| `all` | Debug all MLD. |
| `decode` | Debug MLD decoding. |
| `encode` | Debug MLD encoding. |
| `events` | Debug MLD events. |
| `fsm` | Debug MLD Finite State Machine (FSM). |
| `tib` | Debug MLD Tree Information Base (TIB). |

**Mode**

Privileged Exec and Global Configuration

**Usage notes**

This command applies to interfaces configured for MLD Layer 3 multicast protocols and learned by MLD Snooping.

**Examples**

```
awplus# configure terminal
awplus(config)# debug mld all
awplus# configure terminal
awplus(config)# debug mld decode
awplus# configure terminal
awplus(config)# debug mld encode
awplus# configure terminal
awplus(config)# debug mld events
```

**Related commands**

show debugging mld

# ipv6 mld

**Overview**

Use this command to enable the MLD protocol operation on an interface. This command enables MLD protocol operation in stand-alone mode, and can be used to learn local-membership information prior to enabling a multicast routing protocol on the interface.

Use the **no** variant of this command to return all MLD related configuration to the default (including MLD Snooping).

**Syntax**

```
ipv6 mld
no ipv6 mld
```

**Default**

MLD is disabled by default.

**Mode**

Interface Configuration for a specified VLAN interface or a range of VLAN interfaces.

**Usage notes**

MLD requires memory for storing data structures, as well as the hardware tables to implement hardware routing. As the number of ports, VLANs, static and dynamic groups increases then more memory is consumed. You can track the memory used for MLD with the command:

```
awplus# show memory pools nsm | grep MLD
```

Static and dynamic groups (LACP), ports and VLANs are not limited for MLD. For VLANs, this allows you to configure MLD across more VLANs with fewer ports per VLAN, or fewer VLANs with more ports per VLAN. For LACPs, you can configure MLD across more LACP groups with fewer ports per LACP, or fewer LACP groups with more ports per LACP.

**Example**

```
awplus# configure terminal
awplus(config)# ipv6 forwarding
awplus(config)# ipv6 multicast-routing
awplus(config)# interface vlan1
awplus(config-if)# ipv6 enable
awplus(config-if)# ipv6 mld
```

# ipv6 mld last-member-query-count

**Overview** Use this command to set the last-member query-count value.

Use the **no** variant of this command to return to the default on an interface.

**Syntax**

```
ipv6 mld last-member-query-count <value>
no ipv6 mld last-member-query-count
```

| Parameter | Description |
|---|---|
| *<value>* | Count value. Valid values are from `2 to 7`. |

**Default** The default last-member query-count value is 2.

**Mode** Interface Configuration for a specified VLAN interface or a range of VLAN interfaces.

**Example**

```
awplus# configure terminal
awplus(config)# ipv6 forwarding
awplus(config)# ipv6 multicast-routing
awplus(config)# interface vlan2
awplus(config-if)# ipv6 enable
awplus(config-if)# ipv6 mld last-member-query-count 3
```

# ipv6 mld last-member-query-interval

**Overview** Use this command to configure the interval at which the router sends MLD group-specific host query messages.

Use the **no** variant of this command to set this frequency to the default.

**Syntax**

```
ipv6 mld last-member-query-interval <milliseconds>
no ipv6 mld last-member-query-interval
```

| Parameter | Description |
|---|---|
| *<milliseconds>* | The time delay between successive query messages (in milliseconds). Valid values are from 1000 to 25500 milliseconds. |

**Default** 1000 milliseconds

**Mode** Interface Configuration for a specified VLAN interface or a range of VLAN interfaces.

**Example**

```
awplus# configure terminal
awplus(config)# ipv6 forwarding
awplus(config)# ipv6 multicast-routing
awplus(config)# interface vlan2
awplus(config-if)# ipv6 enable
awplus(config-if)# ipv6 mld last-member-query-interval 2000
```

# ipv6 mld querier-timeout

**Overview**

Use this command to configure the timeout period before the router takes over as the querier for the interface after the previous querier has stopped querying.

Use the **no** variant of this command to restore the default.

**Syntax**

```
ipv6 mld querier-timeout <seconds>
no ipv6 mld querier-timeout
```

| Parameter | Description |
|---|---|
| *<seconds>* | Number of seconds that the router waits after the previous querier has stopped querying before it takes over as the querier. Valid values are from 2 to 65535 seconds. |

**Default**

255 seconds

**Mode**

Interface Configuration for a specified VLAN interface or a range of VLAN interfaces.

**Usage notes**

This command applies to interfaces configured for MLD Layer-3 multicast protocols.

**Example**

The following example configures the router to wait 120 seconds from the time it received the last query before it takes over as the querier for the interface:

```
awplus# configure terminal
awplus(config)# ipv6 forwarding
awplus(config)# ipv6 multicast-routing
awplus(config)# interface vlan2
awplus(config-if)# ipv6 enable
awplus(config-if)# ipv6 mld querier-timeout 120
```

**Related commands**

ipv6 mld query-interval

# ipv6 mld query-interval

**Overview** Use this command to configure the frequency of sending MLD host query messages.

Use the **no** variant of this command to return to the default frequency.

**Syntax**

```
ipv6 mld query-interval <seconds>
no ipv6 mld query-interval
```

| Parameter | Description |
|---|---|
| *<seconds>* | Variable that specifies the time delay between successive MLD host query messages (in seconds). Valid values are from `1 to 18000 seconds`. |

**Default** The default query interval is 125 seconds.

**Mode** Interface Configuration for a specified VLAN interface or a range of VLAN interfaces.

**Usage** This command applies to interfaces configured for MLD Layer-3 multicast protocols.

**Example** The following example changes the frequency of sending MLD host-query messages to 2 minutes:

```
awplus# configure terminal
awplus(config)# ipv6 forwarding
awplus(config)# ipv6 multicast-routing
awplus(config)# interface vlan2
awplus(config-if)# ipv6 enable
awplus(config-if)# ipv6 mld query-interval 120
```

**Related commands** ipv6 mld querier-timeout

# ipv6 mld query-max-response-time

**Overview** Use this command to configure the maximum response time advertised in MLD queries.

Use the **no** variant of with this command to restore the default.

**Syntax**

```
ipv6 mld query-max-response-time <seconds>
no ipv6 mld query-max-response-time
```

| Parameter | Description |
|---|---|
| *<seconds>* | Maximum response time (in seconds) advertised in MLD queries. Valid values are from 1 to 240 seconds. |

**Default** 10 seconds

**Mode** Interface Configuration for a specified VLAN interface or a range of VLAN interfaces.

**Usage** This command applies to interfaces configured for MLD Layer-3 multicast protocols.

**Example** The following example configures a maximum response time of 8 seconds:

```
awplus# configure terminal
awplus(config)# ipv6 forwarding
awplus(config)# ipv6 multicast-routing
awplus(config)# interface vlan2
awplus(config-if)# ipv6 enable
awplus(config-if)# ipv6 mld query-max-response-time 8
```

# ipv6 mld robustness-variable

**Overview** Use this command to change the robustness variable value on an interface.

Use the **no** variant of this command to return to the default on an interface.

**Syntax**

```
ipv6 mld robustness-variable <value>
no ipv6 mld robustness-variable
```

**Default** The default robustness variable value is 2.

**Mode** Interface Configuration for a specified VLAN interface or a range of VLAN interfaces.

**Usage** This command applies to interfaces configured for MLD Layer-3 multicast protocols.

**Example**

```
awplus# configure terminal
awplus(config)# ipv6 forwarding
awplus(config)# ipv6 multicast-routing
awplus(config)# interface vlan2
awplus(config-if)# ipv6 enable
awplus(config-if)# ipv6 mld robustness-variable 3
```

# ipv6 mld snooping

**Overview**

Use this command to enable MLD Snooping. When this command is issued in the Global Configuration mode, MLD Snooping is enabled globally for the device. When this command is issued in Interface mode for a VLAN then MLD Snooping is enabled for the specified VLAN. Note that MLD Snooping is enabled on the VLAN only if it is enabled globally and on the VLAN.

Use the **no** variant of this command to globally disable MLD Snooping in Global Configuration mode, or for the specified VLAN interface in Interface mode.

**Syntax**

```
ipv6 mld snooping
no ipv6 mld snooping
```

**Default**

By default, MLD Snooping is enabled both globally and on all VLANs.

**Mode**

Global Configuration and Interface Configuration for a specified VLAN interface or a range of VLAN interfaces.

**Usage notes**

For MLD Snooping to operate on particular VLAN interfaces, it must be enabled both globally by using this command in Global Configuration mode, and on individual VLAN interfaces by using this command in Interface Configuration mode (both are enabled by default).

MLD requires memory for storing data structures, as well as the hardware tables to implement hardware routing. As the number of ports, VLANs, static and dynamic groups increases then more memory is consumed. You can track the memory used for MLD with the command:

```
awplus# show memory pools nsm | grep MLD
```

Static and dynamic groups (LACP), ports and VLANs are not limited for MLD. For VLANs, this allows you to configure MLD across more VLANs with fewer ports per VLAN, or fewer VLANs with more ports per VLAN. For LACPs, you can configure MLD across more LACP groups with fewer ports per LACP, or fewer LACP groups with more ports per LACP.

**Examples**

To configure MLD Snooping on the VLAN interfaces `vlan2-vlan4`, enter the following commands:

```
awplus# configure terminal
awplus(config)# interface vlan2-vlan4
awplus(config-if)# ipv6 mld snooping
```

To disable MLD Snooping for the VLAN interfaces `vlan2-vlan4`, enter the following commands:

```
awplus# configure terminal
awplus(config)# interface vlan2-vlan4
awplus(config)# no ipv6 mld snooping
```

To configure MLD Snooping globally for the device, enter the following commands:

```
awplus# configure terminal
awplus(config)# ipv6 mld snooping
```

To disable MLD Snooping globally for the device, enter the following commands:

```
awplus# configure terminal
awplus(config)# no ipv6 mld snooping
```

# ipv6 mld snooping fast-leave

**Overview** Use this command to enable MLD Snooping fast-leave processing. Fast-leave processing is analogous to immediate-leave processing; the MLD group-membership is removed as soon as an MLD leave group message is received, without sending out a group-specific query.

Use the **no** variant of this command to disable fast-leave processing.

**Syntax**

```
ipv6 mld snooping fast-leave
no ipv6 mld snooping fast-leave
```

**Default** MLD Snooping fast-leave processing is disabled.

**Mode** Interface Configuration for a specified VLAN interface or a range of VLAN interfaces.

**Usage notes** This MLD Snooping command can only be configured on VLAN interfaces.

**Examples** This example shows how to enable fast-leave processing on the VLAN interface vlan2.

```
awplus# configure terminal
awplus(config)# interface vlan2
awplus(config-if)# ipv6 mld snooping fast-leave
```

This example shows how to enable fast-leave processing on the VLAN interface vlan2-vlan4.

```
awplus# configure terminal
awplus(config)# interface vlan2-vlan4
awplus(config-if)# ipv6 mld snooping fast-leave
```

# ipv6 mld snooping mrouter

**Overview** Use this command to statically configure the specified port as a Multicast Router interface for MLD Snooping within the specified VLAN.

See detailed usage notes below to configure static multicast router ports when using static IPv6 multicast routes with EPSR, and the destination VLAN is an EPSR data VLAN.

Use the **no** variant of this command to remove the static configuration of the interface as a Multicast Router interface.

**Syntax**

```
ipv6 mld snooping mrouter interface <port>
no ipv6 mld snooping mrouter interface <port>
```

| Parameter | Description |
|---|---|
| *<port>* | Specify the name of the port. |

**Mode** Interface Configuration for a specified VLAN interface or a range of VLAN interfaces.

**Usage notes** This MLD Snooping command statically configures a switch port as a Multicast Router interface.

Note that if static IPv6 multicast routing is being used with EPSR and the destination VLAN is an EPSR data VLAN, then multicast router (mrouter) ports must be statically configured. This minimizes disruption for multicast traffic in the event of ring failure or restoration.

When configuring the EPSR data VLAN, statically configure mrouter ports so that the multicast router can be reached in either direction around the EPSR ring.

For example, if port1.0.1 and port1.0.6 are ports on an EPSR data VLAN vlan101, which is the destination for a static IPv6 multicast route, then configure both ports as multicast router (mrouter) ports as shown in the example commands listed below:

Figure 37-1: Example **ipv6 mld snooping mrouter** commands when static IPv6 multicast routing is being used and the destination VLAN is an EPSR data VLAN:

```
awplus>enable
awplus#configure terminal
awplus(config)#interface vlan101
awplus(config-if)#ipv6 mld snooping mrouter interface port1.0.1
awplus(config-if)#ipv6 mld snooping mrouter interface port1.0.6
```

**Examples**

This example shows how to specify the next-hop interface to the multicast router for VLAN interface `vlan2`:

```
awplus# configure terminal
awplus(config)# interface vlan2
awplus(config-if)# ipv6 mld snooping mrouter interface
port1.0.5
```

This example shows how to specify the next-hop interface to the multicast router for VLAN interfaces `vlan2-vlan4`:

```
awplus# configure terminal
awplus(config)# interface vlan2-vlan4
awplus(config-if)# ipv6 mld snooping mrouter interface
port1.0.5
```

**Related commands**

ipv6 multicast route

# ipv6 mld snooping querier

**Overview** Use this command to enable MLD querier operation on a subnet (VLAN) when no multicast routing protocol is configured in the subnet (VLAN). When enabled, the MLD Snooping querier sends out periodic MLD queries for all interfaces on that VLAN.

Use the **no** variant of this command to disable MLD querier configuration.

**Syntax**

```
ipv6 mld snooping querier
no ipv6 mld snooping querier
```

**Mode** Interface Configuration for a specified VLAN interface.

**Usage** This command can only be configured on a single VLAN interface - not on multiple VLANs.

The MLD Snooping querier uses the 0.0.0.0 Source IP address because it only masquerades as an MLD querier for faster network convergence.

The MLD Snooping querier does not start, or automatically cease, the MLD Querier operation if it detects query message(s) from a multicast router. It restarts as an MLD Snooping querier if no queries are seen within the other querier interval.

Do not enable MLD Snooping querier if you have already enabled MLD on your device.

Do not enable MLD Snooping querier on your device and then enable MLD afterwards.

**Example**

```
awplus# configure terminal
awplus(config)# interface vlan2
awplus(config-if)# ipv6 mld snooping querier
```

# ipv6 mld snooping report-suppression

**Overview** Use this command to enable report suppression from hosts for Multicast Listener Discovery version 1 (MLDv1) on a VLAN in Interface Configuration mode.

Use the **no** variant of this command to disable report suppression on a VLAN in Interface Configuration mode.

**Syntax**

```
ipv6 mld snooping report-suppression
no ipv6 mld snooping report-suppression
```

**Default** Report suppression does not apply to MLDv2, and is turned on by default for MLDv1 reports.

**Mode** Interface Configuration for a specified VLAN interface or a range of VLAN interfaces.

**Usage** This MLD Snooping command can only be configured on VLAN interfaces.

MLDv1 Snooping maybe configured to suppress reports from hosts. When a querier sends a query, only the first report for particular set of group(s) from a host will be forwarded to the querier by the MLD Snooping device. Similar reports (to the same set of groups) from other hosts, which would not change group memberships in the querier, will be suppressed by the MLD Snooping device to prevent 'flooding' of query responses.

**Examples** This example shows how to enable report suppression for MLD reports on VLAN interface `vlan2`:

```
awplus# configure terminal
awplus(config)# interface vlan2
awplus(config-if)# ipv6 mld snooping report-suppression
```

This example shows how to disable report suppression for MLD reports on VLAN interface `vlan2`:

```
awplus# configure terminal
awplus(config)# interface vlan2
awplus(config-if)# no ipv6 mld snooping report-suppression
```

This example shows how to enable report suppression for MLD reports on VLAN interfaces `vlan2-vlan4`:

```
awplus# configure terminal
awplus(config)# interface vlan2-vlan4
awplus(config-if)# ipv6 mld snooping report-suppression
```

This example shows how to disable report suppression for MLD reports on VLAN interfaces `vlan2-vlan4`:

```
awplus# configure terminal
awplus(config)# interface vlan2-vlan4
awplus(config-if)# no ipv6 mld snooping report-suppression
```

# ipv6 mld ssm-map enable

**Overview** Use this command to enable the Source Specific Multicast (SSM) mapping feature on the device.

Use the **no** variant of this command to disable the SSM mapping feature on the device.

**Syntax**

```
ipv6 mld ssm-map enable
no ipv6 mld ssm-map enable
```

**Mode** Global Configuration

**Usage notes** This command enables the SSM mapping feature for group members in the defined SSM range.

**Example** This example shows how to enable the MLD SSM mapping feature on the device.

```
awplus# configure terminal
awplus(config)# ipv6 mld ssm-map enable
```

# ipv6 mld static-group

**Overview** Use this command to statically configure IPv6 group membership entries on an interface. To statically add only a group membership, do not specify any parameters.

Use the **no** variant of this command to delete static group membership entries.

**Syntax**

```
ipv6 mld static-group <ipv6-group-address> [source
<ipv6-source-address>] [interface <port>]
```

```
no ipv6 mld static-group <ipv6-group-address> [source
<ipv6-source-address>] [interface <port>]
```

| Parameter | Description |
|---|---|
| *<ipv6-group-address>* | Specify a standard IPv6 Multicast group address to be configured as a static group member.<br>The IPv6 address uses the format X:X::X:X. |
| *<ipv6-source-address>* | Optional. Specify a standard IPv6 source address to be configured as a static source from where multicast packets originate.<br>The IPv6 address uses the format X:X::X:X. |
| *<port>* | Optional. Physical interface. This parameter specifies a physical port. If this parameter is used, the static configuration is applied to just to that physical interface. If this parameter is not used, the static configuration is applied on all ports in the VLAN. |

**Mode** Interface Configuration for a VLAN interface.

**Usage notes** This command applies to MLD Snooping on a VLAN interface to statically add groups and/or source records.

**Examples** To add a static group record, use the following commands:

```
awplus# configure terminal
awplus(config)# interface vlan2
awplus(config-if)# ipv6 mld static-group ff1e::10
```

To add a static group and source record, use the following commands:

```
awplus# configure terminal
awplus(config)# interface vlan2
awplus(config-if)# ipv6 mld static-group ff1e::10 source
fe80::2fd:6cff:fe1c:b
```

To add a static group record on a specific port on vlan2, use the following commands:

```
awplus# configure terminal
awplus(config)# interface vlan2
awplus(config-if)# ipv6 mld static-group ff1e::10 interface
port1.0.4
```

# ipv6 mld version

**Overview** Use this command to set the current MLD protocol version on an interface.

Use the **no** variant of this command to return to the default version on an interface.

**Syntax**

```
ipv6 mld version <version>
no ipv6 mld version
```

| Parameter | Description |
|---|---|
| *<version>* | MLD protocol version number. Valid version numbers are 1 and 2 |

**Default** The default MLD protocol version number is 2.

**Mode** Interface Configuration for a VLAN interface.

**Usage notes** This command applies to interfaces configured for MLD Layer-3 multicast protocols and MLD Snooping. Note this command is intended for use where there is another querier (when there is another device with MLD enabled) on the same link that can only operate with MLD version 1. Otherwise, the default MLD version 2 is recommended for performance.

**Example**

```
awplus# configure terminal
awplus(config)# ipv6 forwarding
awplus(config)# ipv6 multicast-routing
awplus(config)# interface vlan2
awplus(config-if)# ipv6 enable
awplus(config-if)# ipv6 mld version 1
```

# show debugging mld

**Overview** Use this command to see what debugging is turned on for MLD. MLD debugging modes are enabled with the debug mld command.

For information on filtering and saving command output, see the "Getting_Started with AlliedWare Plus" Feature Overview and Configuration_Guide.

**Syntax** `show debugging mld`

**Mode** Privileged Exec

**Example** `awplus# show debugging mld`

**Output**

```
show debugging mld
MLD Debugging status:
  MLD Decoder debugging is on
  MLD Encoder debugging is on
  MLD Events debugging is on
  MLD FSM debugging is on
  MLD Tree-Info-Base (TIB) debugging is on
```

**Related commands** debug mld

# show ipv6 mld groups

**Overview** Use this command to display the multicast groups that have receivers directly connected to the router and learned through MLD.

For information on filtering and saving command output, see the "Getting Started with AlliedWare Plus" Feature Overview and Configuration Guide.

**Syntax**

```
show ipv6 mld groups [<ipv6-address>|<interface>] [detail]
```

| Parameter | Description |
|---|---|
| *<ipv6-address>* | Optional. Specify Address of the multicast group in format X:X::X:X. |
| *<interface>* | Optional. Specify the Interface name for which to display local information. |

**Mode** User Exec and Privileged Exec

**Examples** The following command displays local-membership information for all interfaces:

```
awplus# show ipv6 mld groups
```

**Output** Figure 37-2: Example output for **show ipv6 mld groups**

```
awplus#show ipv6 mld groups
MLD Connected Group Membership
Group Address                           Interface            Uptime   Expires
                    Last Reporter
ff08::1                                 vlan10 (port1.0.1)   00:07:27 00:03:10
                    fe80::200:1ff:fe20:b5ac
```

The following command displays local-membership information for all interfaces:

```
awplus# show ipv6 mld groups detail
```

# show ipv6 mld interface

**Overview** Use this command to display the state of MLD and MLD Snooping for a specified interface, or all interfaces.

For information on filtering and saving command output, see the "Getting Started with AlliedWare Plus" Feature Overview and Configuration Guide.

**Syntax**

```
show ipv6 mld interface [<interface>]
```

| Parameter | Description |
|---|---|
| *<interface>* | Interface name. |

**Mode** User Exec and Privileged Exec

**Example** The following command displays MLD interface status on all interfaces enabled for MLD:

```
awplus# show ipv6 mld interface
```

**Output**

```
awplus#show ipv6 mld interface

Interface vlan1 (Index 301)
 MLD Enabled, Active, Querier, Version 2 (default)
 Internet address is fe80::215:77ff:fec9:7468
 MLD interface has 0 group-record states
 MLD activity: 0 joins, 0 leaves
 MLD robustness variable is 2
 MLD last member query count is 2
 MLD query interval is 125 seconds
 MLD querier timeout is 255 seconds
 MLD max query response time is 10 seconds
 Last member query response interval is 1000 milliseconds
 Group Membership interval is 260 seconds
 MLD Snooping is globally enabled
 MLD Snooping is enabled on this interface
 MLD Snooping fast-leave is not enabled
 MLD Snooping querier is enabled
 MLD Snooping report suppression is enabled
```

# show ipv6 mld snooping mrouter

**Overview** Use this command to display the multicast router interfaces, both configured and learned, in a VLAN. If you do not specify a VLAN interface then all the VLAN interfaces are displayed.

For information on filtering and saving command output, see the "Getting_Started with AlliedWare Plus" Feature Overview and Configuration_Guide.

**Syntax**

```
show ipv6 mld snooping mrouter [<interface>]
```

| Parameter | Description |
|---|---|
| *<interface>* | Optional. Specify the name of the VLAN interface. Note: If you do not specify a single VLAN interface, then all VLAN interfaces are shown. |

**Mode** User Exec and Privileged Exec

**Examples** The following command displays the multicast router interfaces in `vlan2`:

```
awplus# show ipv6 mld snooping mrouter vlan2
```

**Output**

```
awplus#show ipv6 mld snooping mrouter vlan2
VLAN     Interface     Static/Dynamic
2        port1.0.2     Dynamically Learned
2        port1.0.3     Dynamically Learned
```

The following command displays the multicast router interfaces for all VLAN interfaces:

```
awplus# show ipv6 mld snooping mrouter
```

**Output**

```
awplus#show ipv6 mld snooping mrouter
VLAN     Interface     Static/Dynamic
2        port1.0.2     Dynamically Learned
2        port1.0.3     Dynamically Learned
3        port1.0.4     Statically Assigned
3        port1.0.5     Statically Assigned
```

# show ipv6 mld snooping statistics

**Overview** Use this command to display MLD Snooping statistics data.

For information on filtering and saving command output, see the "Getting Started with AlliedWare Plus"_Feature Overview and Configuration Guide.

**Syntax**

```
show ipv6 mld snooping statistics interface <interface>
```

| Parameter | Description |
|---|---|
| *<interface>* | The name of the VLAN interface. |

**Mode** User Exec and Privileged Exec

**Example** The following command displays MLDv2 statistical information for `vlan1`:

```
awplus# show ipv6 mld snooping statistics interface vlan1
```

**Output**

```
awplus#show ipv6 mld snooping statistics interface vlan1
MLD Snooping statistics for vlan1
Interface:      port1.0.1
Group:          ff08::1
Uptime:         00:02:18
Group mode:     Include ()
Last reporter:  fe80::eecd:6dff:fe6b:4783
Group source list: (R - Remote, M - SSM Mapping, S - Static )
  Source Address       Uptime    v2 Exp    Fwd  Flags
  2001:db8::1          00:02:18  00:02:02  Yes  R
  2001:db8::3          00:02:18  00:02:02  Yes  R
```

# 38 Multicast Commands

## Introduction

**Overview** This chapter provides an alphabetical reference of multicast commands for configuring:

- IPv4 and IPv6 multicast forwarding
- IPv4 and IPv6 static multicast routes
- mroutes (routes back to a multicast source)

For commands for other multicast protocols, see:

- IGMP and IGMP Snooping Commands
- MLD and MLD Snooping Commands
- PIM-SM Commands
- PIM-SMv6 Commands

***NOTE:*** *Before using PIM-SMv6 commands, IPv6 must be enabled on an interface with the ipv6 enable command, IPv6 forwarding must be enabled globally for routing IPv6 with the ipv6 forwarding command, and IPv6 multicasting must be enabled globally with the ipv6 multicast-routing command.*

*Static IPv6 multicast routes take priority over dynamic IPv6 multicast routes. Use the clear ipv6 mroute command to clear static IPv6 multicast routes and ensure dynamic IPv6 multicast routes can take over from previous static IPv6 multicast routes.*

*The IPv6 Multicast addresses shown can be derived from IPv6 unicast prefixes as per RFC 3306. The IPv6 unicast prefix reserved for documentation is 2001:0db8::/32 as per RFC 3849. Using the base /32 prefix the IPv6 multicast prefix for 2001:0db8::/32 is ff3x:20:2001:0db8::/64. Where an RP address is 2001:0db8::1 the embedded RP multicast prefix is ff7x:120:2001:0db8::/96.*

*The IPv6 addresses shown use the address space 2001:0db8::/32, defined in RFC 3849 for documentation purposes. These addresses should not be used for practical networks (other than for testing purposes) nor should they appear on any public network.*

**Command List**


- "clear ip mroute" on page 1835
- "clear ip mroute statistics" on page 1836
- "clear ipv6 mroute" on page 1837
- "clear ipv6 mroute statistics" on page 1838
- "debug nsm" on page 1839
- "debug nsm mcast" on page 1840
- "debug nsm mcast6" on page 1841
- "ip mroute" on page 1842
- "ip multicast route" on page 1844
- "ip multicast route-limit" on page 1846
- "ip multicast wrong-vif-suppression" on page 1847
- "ip multicast-routing" on page 1848
- "ipv6 mroute" on page 1849
- "ipv6 multicast route" on page 1851
- "ipv6 multicast route-limit" on page 1853
- "ipv6 multicast-routing" on page 1854
- "multicast" on page 1855
- "platform multicast-ratelimit" on page 1856
- "show debugging nsm mcast" on page 1857
- "show ip mroute" on page 1858
- "show ip mvif" on page 1861
- "show ip rpf" on page 1862
- "show ipv6 mroute" on page 1863
- "show ipv6 multicast forwarding" on page 1865
- "show ipv6 mif" on page 1866

# clear ip mroute

**Overview** Use this command to delete entries from the IPv4 multicast routing table.

***NOTE:*** *If you use this command, you should also use the clear ip igmp group command to clear IGMP group membership records.*

**Syntax**

```
clear ip mroute {*|<ipv4-group-address>
[<ipv4-source-address>]} [pim sparse-mode]
```

| Parameter | Description |
|---|---|
| * | Deletes all multicast routes. |
| *<ipv4-group-address>* | Group IPv4 address, in dotted decimal notation in the format A.B.C.D. |
| *<ipv4-source-address>* | Source IPv4 address, in dotted decimal notation in the format A.B.C.D. |
| `pim sparse-mode` | Clear specified IPv4 multicast route(s) for PIM Sparse Mode only. |

**Mode** Privileged Exec

**Usage notes** When this command is used, the Multicast Routing Information Base (MRIB) clears the IPv4 multicast route entries in its IPv4 multicast route table, and removes the entries from the multicast forwarder. The MRIB sends a “clear” message to the multicast protocols. Each multicast protocol has its own “clear” multicast route command. The protocol-specific “clear” command clears multicast routes from PIM Sparse Mode, and also clears the routes from the MRIB.

**Examples**

```
awplus# clear ip mroute 225.1.1.1 192.168.3.3
awplus# clear ip mroute *
```

**Related commands** ip multicast route

show ip mroute

**Command changes** Version 5.4.7-1.1: VRF-lite support added SBx8100.

Version 5.4.8-1.1: VRF-lite support added x930, SBx908 GEN2.

# clear ip mroute statistics

**Overview** Use this command to delete multicast route statistics entries from the IP multicast routing table.

**Syntax**

```
clear ip mroute statistics {*|<ipv4-group-addr>
[<ipv4-source-addr>]}
```

| Parameter | Description |
|---|---|
| * | All multicast route entries. |
| *<ipv4-group-addr>* | Group IPv4 address, in dotted decimal notation in the format A.B.C.D. |
| *<ipv4-source-addr>* | Source IPv4 address, in dotted decimal notation in the format A.B.C.D. |

**Mode** Privileged Exec

**Example**

```
awplus# clear ip mroute statistics 225.1.1.2 192.168.4.4
awplus# clear ip mroute statistics *
```

# clear ipv6 mroute

**Overview**

Use this command to delete one or more dynamically-added route entries from the IPv6 multicast routing table.

You need to do this, for example, if you want to create a static route instead of an existing dynamic route.

**Syntax**

```
clear ipv6 mroute {*|<ipv6-group-address>
[<ipv6-source-address>]}
```

| Parameter | Description |
|---|---|
| * | Deletes all dynamically-learned IPv6 multicast routes. |
| *<ipv6-group-address>* | Group IPv6 address, in hexadecimal notation in the format X.X::X.X. |
| *<ipv6-source-address>* | Source IPv6 address, in hexadecimal notation in the format X.X::X.X. |

**Mode**

Privileged Exec

**Usage notes**

When this command is used, the Multicast Routing Information Base (MRIB) clears the relevant IPv6 multicast route entries in its IPv6 multicast route table, and removes the entries from the multicast forwarder. The MRIB sends a “clear” message to the multicast protocols. Each multicast protocol has its own “clear” multicast route command.

This command does not remove static routes from the routing table or the configuration. To remove static routes, use the **no** parameter of the command ipv6 multicast route.

**Example**

```
awplus# clear ipv6 mroute 2001::2 ff08::1
```

**Related commands**

ipv6 multicast route

show ipv6 mroute

# clear ipv6 mroute statistics

**Overview** Use this command to delete multicast route statistics entries from the IPv6 multicast routing table.

***NOTE:*** *Static IPv6 multicast routes take priority over dynamic IPv6 multicast routes. Use the clear ipv6 mroute command to clear static IPv6 multicast routes and ensure dynamic IPv6 multicast routes can take over from previous static IPv6 multicast routes.*

**Syntax**

```
clear ipv6 mroute statistics {*|<ipv6-group-address>
[<ipv6-source-address>]}
```

| Parameter | Description |
|---|---|
| * | All multicast route entries. |
| *<ipv6-group-addr>* | Group IPv6 address, in hexadecimal notation in the format X.X::X.X. |
| *<ipv6-source-addr>* | Source IPv6 address, in hexadecimal notation in the format X.X::X.X. |

**Mode** Privileged Exec

**Examples**

```
awplus# clear ipv6 mroute statistics 2001::2 ff08::1
awplus# clear ipv6 mroute statistics *
```

# debug nsm

**Overview**

This command specifies a set of debug options for use by Allied Telesis authorized service personnel only.

Use the **no** variant of this command to remove debug options.

**Syntax**

```
debug nsm [all|events|ha|kernel]
no debug nsm [all|events|ha|kernel]
```

| Parameter | Description |
|---|---|
| `all` | Enables all the nsm debugging options |
| `events` | Enables the nsm events debugging options |
| `ha` | Enables the nsm high availability debugging options |
| `kernel` | Enables the nsm kernel debugging options |

**Mode**

Global Configuration, Privileged Exec

**Usage notes**

This command is intended for use by Allied Telesis authorized service personnel for diagnostic purposes.

**Related commands**

show debugging nsm mcast

**Command changes**

Version 5.4.7-2.1 command added.

# debug nsm mcast

**Overview** Use this command to debug IPv4 events in the Multicast Routing Information Base (MRIB).

This command is intended for use by Allied Telesis authorized service personnel for diagnostic purposes.

**Syntax**

```
debug nsm mcast
{all|fib-msg|mrt|mtrace|mtrace-detail|register|stats|vif}
```

| Parameter | Description |
|---|---|
| `all` | All IPv4 multicast debugging. |
| `fib-msg` | Forwarding Information Base (FIB) messages. |
| `mrt` | Multicast routes. |
| `mtrace` | Multicast traceroute. |
| `mtrace-detail` | Multicast traceroute detailed debugging. |
| `register` | Multicast PIM register messages. |
| `stats` | Multicast statistics. |
| `vif` | Multicast interface. |

**Mode** Privileged Exec and Global Configuration

**Examples** To enable debugging of all multicast route events, use the commands:

```
awplus# configure terminal
awplus(config)# debug nsm mcast all
```

To enable debugging of PIM register entries, use the commands:

```
awplus# configure terminal
awplus(config)# debug nsm mcast register
```

**Command changes** Version 5.4.7-1.1: VRF-lite support added SBx8100.

Version 5.4.8-1.1: VRF-lite support added x930, SBx908 GEN2.

# debug nsm mcast6

**Overview** Use this command to debug IPv6 events in the Multicast Routing Information Base (MRIB).

This command is intended for use by Allied Telesis authorized service personnel for diagnostic purposes.

**Syntax**

```
debug nsm mcast6 {all|fib-msg|mrt|register|stats|vif}
no debug nsm mcast6 {all|fib-msg|mrt|register|stats|vif}
```

| Parameter | Description |
|---|---|
| `all` | All IPv6 multicast route debugging. |
| `fib-msg` | Forwarding Information Base (FIB) messages. |
| `mrt` | Multicast routes. |
| `register` | Multicast PIM register messages. |
| `stats` | Multicast statistics. |
| `vif` | Multicast interfaces. |

**Mode** Privileged Exec and Global Configuration

**Examples** To enable debugging of all multicast route events, use the commands:

```
awplus# configure terminal
awplus(config)# debug nsm mcast6 all
```

To enable debugging of PIM register entries, use the commands:

```
awplus# configure terminal
awplus(config)# debug nsm mcast6 register
```

# ip mroute

**Overview** Use this command to inform multicast of the RPF (Reverse Path Forwarding) route to a given IPv4 multicast source.

Use the **no** variant of this command to delete a route to an IPv4 multicast source.

**Syntax**

```
ip mroute <ipv4-source-address/mask-length>
[bgp|ospf|rip|static] <rpf-address> [<admin-distance>]
```

```
no ip mroute <ipv4-source-address/mask-length>
[bgp|ospf|rip|static]
```

| Parameter | Description |
|---|---|
| *<ipv4-source-address/mask-length>* | A multicast source IPv4 address and mask length, in dotted decimal notation in the format A.B.C.D/M. |
| `bgp` | BGP unicast routing protocol. |
| `ospf` | OSPF unicast routing protocol. |
| `rip` | RIP unicast routing protocol. |
| `static` | Specifies a static route. |
| *<rpf-address>* | A.B.C.D<br>The closest known address on the multicast route back to the specified source. This host IPv4 address can be within a directly connected subnet or within a remote subnet. In the case that the address is in a remote subnet, a lookup is done from the unicast route table to find the next hop address on the path to this host. |
| *<admin-distance>* | The administrative distance. Use this to determine whether the RPF lookup selects the unicast or multicast route. Lower distances have preference. If the multicast static route has the same distance as the other RPF sources, the multicast static route takes precedence. The default is 0 and the range available is 0-255. |

**Mode** Global Configuration

**Usage notes** Typically, when a Layer 3 multicast routing protocol is determining the RPF (Reverse Path Forwarding) interface for the path to an IPv4 multicast source, it uses the unicast route table to find the best path to the source. However, in some networks a deliberate choice is made to send multicast via different paths to those used for unicast. In this case, the interface via which a multicast stream from a given source enters a router may not be the same as the interface that connects to the best unicast route to that source.

This command enables the user to statically configure the device with “multicast routes” back to given sources. When performing the RPF check on a stream from a given IPv4 source, the multicast routing protocol will look at these static entries as well as looking into the unicast routing table. The route with the lowest

administrative distance - whether a static “multicast route” or a route from the unicast route table - will be chosen as the RPF route to the source.

Note that in this context the term “multicast route” does not imply a route via which the current router will forward multicast; instead it refers to the route the multicast will have traversed in order to arrive at the current router.

## Examples

The following example creates a static multicast IPv4 route back to the sources in the 10.10.3.0/24 subnet. The multicast route is via the host 192.168.2.3, and has an administrative distance of 2:

```
awplus# configure terminal
awplus(config)# ip mroute 10.10.3.0/24 static 2 192.168.2.3 2
```

The following example creates a static multicast IPv4 route back to the sources in the 192.168.3.0/24 subnet. The multicast route is via the host 10.10.10.50. The administrative distance on this route has the default value of 0:

```
awplus# configure terminal
awplus(config)# ip mroute 192.168.3.0/24 10.10.10.50
```

## Validation Commands

show ip rpf

# ip multicast route

**Overview** Use this command to add an IPv4 static multicast route for a specific multicast source and group IPv4 address to the multicast Routing Information Base (RIB). This IPv4 multicast route is used to forward multicast traffic from a specific source and group ingressing on an upstream VLAN to a single or range of downstream VLANs.

Use the **no** variant of this command to either remove an IPv4 static multicast route set with this command or to remove a specific downstream VLAN interface from an IPv4 static multicast route for a specific multicast source and group IPv4 address.

**Syntax**

```
ip multicast route <ipv4-source-addr> <ipv4-group-addr>
<upstream-vlan-id> [<downstream-vlan-id>]
```

```
no ip multicast route <ipv4-source-addr> <ipv4-group-addr>
[<upstream-vlan-id> <downstream-vlan-id>]
```

| Parameter | Description |
|---|---|
| *<ipv4-source-addr>* | Source IPv4 address, in dotted decimal notation in the format A.B.C.D. |
| *<ipv4-group-addr>* | Group IPv4 address, in dotted decimal notation in the format A.B.C.D. |
| *<upstream-vlan-id>* | Upstream VLAN interface on which the multicast packets ingress. |
| *<downstream-vlan-id>* | Downstream VLAN interface or range of VLAN interfaces to which the multicast packets are sent. |

**Default** By default, this feature is disabled.

**Mode** Global Configuration

**Usage notes** Only one multicast route entry per IPv4 address and multicast group can be specified. Therefore, if one entry for a static multicast route is configured, PIM will not be able to update this multicast route in any way.

If a dynamic multicast route exists you cannot create a static multicast route with same source IPv4 address, group IPv4 address, upstream VLAN and downstream VLANs. An error message is displayed and logged. To add a new static multicast route, either wait for the dynamic multicast route to timeout or clear the dynamic multicast route with the clear ip mroute command.

To update an existing static multicast route entry with more or a new set of downstream VLANs, you must firstly remove the existing static multicast route and then add the new static multicast route with all downstream VLANs specified. If you attempt to update an existing static multicast route entry with an additional VLAN or VLANs an error message is displayed and logged.

To create a blackhole or null route where packets from a specified source and group address coming from an upstream VLAN are dropped rather than

forwarded, do not specify the optional <*downstream-vlan-id*> parameter when entering this command.

To remove a specific downstream VLAN from an existing static multicast route entry, specify the VLAN you want to remove with the `<downstream-vlan-id>` parameter when entering the **no** variant of this command.

## Examples

To create a static multicast route for the multicast source IPv4 address `2.2.2.2` and group IPv4 address `224.9.10.11`, specifying the upstream VLAN interface as `vlan10` and the downstream VLAN interface as `vlan20`, use the following commands:

```
awplus# configure terminal
awplus(config)# ip multicast route 2.2.2.2 224.9.10.11 vlan10
vlan20
```

To create a blackhole route for the multicast source IPv4 address `2.2.2.2` and group IPv4 address `224.9.10.11`, specifying the upstream VLAN interface as `vlan10`, use the following commands:

To create an IPv4 static multicast route for the multicast source IPv4 address `2.2.2.2` and group IP address `224.9.10.11`, specifying the upstream VLAN interface as `vlan10` and the downstream VLAN range as `vlan20-25`, use the following commands:

```
awplus# configure terminal
awplus(config)# ip multicast route 2.2.2.2 224.9.10.11 vlan10
vlan20-25
```

To remove the downstream VLAN 23 from the IPv4 static multicast route created with the above command, use the following commands:

```
awplus# configure terminal
awplus(config)# no ip multicast route 2.2.2.2 224.9.10.11
vlan10 vlan23
```

To delete an IPv4 static multicast route for the multicast source IP address `2.2.2.2` and group IP address `224.9.10.11`, use the following commands:

```
awplus# configure terminal
awplus(config)# no ip multicast route 2.2.2.2 224.9.10.11
```

## Related commands

clear ip mroute

show ip mroute

# ip multicast route-limit

**Overview** Use this command to limit the number of multicast routes that can be added to an IPv4 multicast routing table.

Use the **no** variant of this command to return the IPv4 route limit to the default.

**Syntax**

```
ip multicast route-limit <limit> [<threshold>]
no ip multicast route-limit
```

| Parameter | Description |
|---|---|
| *<limit>* | *<1-2147483647>* Number of routes. |
| *<threshold>* | *<1-2147483647>* Threshold above which to generate a warning message. The mroute warning threshold must not exceed the mroute limit. |

**Default** The default limit and threshold value is 2147483647.

**Mode** Global Configuration

**Usage notes** This command limits the number of multicast IPv4 routes (mroutes) that can be added to a router, and generates an error message when the limit is exceeded. If the threshold parameter is set, a threshold warning message is generated when this threshold is exceeded, and the message continues to occur until the number of mroutes reaches the limit set by the limit argument.

**Examples**

```
awplus# configure terminal
awplus(config)# ip multicast route-limit 34 24
awplus# configure terminal
awplus(config)# no ip multicast route-limit
```

**Command changes** Version 5.4.7-1.1: VRF-lite support added SBx8100.

Version 5.4.8-1.1: VRF-lite support added x930, SBx908 GEN2.

# ip multicast wrong-vif-suppression

**Overview** Use this command to prevent unwanted multicast packets received on an unexpected VLAN being trapped to the CPU.

Use the no variant of this command to disable wrong VIF suppression.

**Syntax**

```
ip ip multicast wrong-vif-suppression
no ip multicast wrong-vif-suppression
```

**Default** By default, this feature is disabled.

**Mode** Global Configuration

**Usage notes** Use this command if there is excessive CPU load and multicast traffic is enabled. To confirm that VIF messages are being sent to the CPU use the debug nsm mcast6 command.

**Examples** To enable the suppression of wrong VIF packets, use the following commands:

```
awplus# configure terminal
awplus(config)# ip multicast wrong-vif-suppression
```

To disable the suppression of wrong VIF packets, use the following commands:

```
awplus# configure terminal
awplus(config)# no ip multicast wrong-vif-suppression
```

# ip multicast-routing

**Overview**

Use this command to turn on/off IPv4 multicast routing on the router; when turned off the device does not perform multicast functions.

Use the **no** variant of this command to disable IPv4 multicast routing after enabling it. Note the default stated below.

**Syntax**

```
ip multicast-routing
no ip multicast-routing
```

**Default**

By default, IPv4 multicast routing is off.

**Mode**

Global Configuration

**Usage notes**

When the **no** variant of this command is used, the Multicast Routing Information Base (MRIB) cleans up Multicast Routing Tables (MRT), stops IGMP operation, and stops relaying multicast forwarder events to multicast protocols.

When multicast routing is enabled, the MRIB starts processing any MRT addition/deletion requests, and any multicast forwarding events.

You must enable multicast routing before issuing other multicast commands.

**Example**

```
awplus# configure terminal
awplus(config)# ip multicast-routing
```

**Validation Commands**

show running-config

**Command changes**

Version 5.4.7-1.1: VRF-lite support added SBx8100.

Version 5.4.8-1.1: VRF-lite support added x930, SBx908 GEN2.

# ipv6 mroute

**Overview** Use this command to inform multicast of the RPF (Reverse Path Forwarding) route to a given IPv6 multicast source.

Use the **no** variant of this command to delete a route to an IPv6 multicast source.

**Syntax**

```
ipv6 mroute <ipv6-source-address/mask-length> [rip|static]
<rpf-address> [<admin-distance>]
no ipv6 mroute <ipv6-source-address/mask-length> [rip|static]
```

| Parameter | Description |
|---|---|
| *<ipv6-source-address/mask-length>* | A multicast source IPv6 address and mask length, in hexadecimal notation in the format X.X::X.X/M. |
| `rip` | RIPng IPv6 unicast routing protocol. |
| `static` | Specifies a static route. |
| *<rpf-address>* | X.X::X:X<br>The closest known address on the IPv6 multicast route back to the specified source. This host IPv6 address can be within a directly connected subnet or within a remote subnet. In the case that the address is in a remote subnet, a lookup is done from the unicast route table to find the nexthop address on the path to this host. |
| *<admin-distance>* | The administrative distance. Use this to determine whether the RPF lookup selects the unicast or multicast route. Lower distances have preference. If the multicast static route has the same distance as the other RPF sources, the multicast static route takes precedence. The default is `0` and the range available is `0-255`. |

**Mode** Global Configuration

**Usage notes** Typically, when a Layer 3 multicast routing protocol is determining the RPF (Reverse Path Forwarding) interface for the path to a multicast source, it uses the unicast IPv6 route table to find the best path to the source. However, in some networks a deliberate choice is made to send multicast via different paths to those used for unicast. In this case, the interface via which a multicast stream from a given source enters a router may not be the same as the interface that connects to the best unicast route to that source.

This command enables the user to statically configure the switch with “multicast routes” back to given sources. When performing the RPF check on a stream from a given IPv6 source, the multicast routing protocol will look at these static entries as well as looking into the unicast routing table. The route with the lowest administrative distance - whether a static “multicast route” or a route from the unicast route table - will be chosen as the RPF route to the source.

Note that in this context the term “multicast route” does not imply a route via which the current router will forward multicast; instead it refers to the route the multicast will have traversed in order to arrive at the current router.

## Examples

The following example creates a static multicast route back to the sources in the `2001::1/64` subnet. The multicast route is via the host `2002::2`, and has an administrative distance of 2:

```
awplus# configure terminal
awplus(config)# ipv6 mroute 2001::1/64 static 2 2002::2
```

The following example creates a static multicast route back to the sources in the 2002::2/64subnet. The multicast route is via the host 2001::1. The administrative distance on this route has the default value of `0`:

```
awplus# configure terminal
awplus(config)# ipv6 mroute 2002::2/64 2001::1
```

## Validation Commands

show ipv6 mroute

# ipv6 multicast route

**Overview** Use this command to add an IPv6 static multicast route for a specific multicast source and group IPv6 address to the multicast Routing Information Base (RIB). This IPv6 multicast route is used to forward IPv6 multicast traffic from a specific source and group ingressing on an upstream VLAN to a single or range of downstream VLANs.

See detailed usage notes below to configure static multicast router ports when using static IPv6 multicast routes with EPSR, and the destination VLAN is an EPSR data VLAN.

Use the **no** variant of this command to either remove an IPv6 static multicast route set with this command or to remove a specific downstream VLAN interface from an IPv6 static multicast route for a specific IPv6 multicast source and group address.

**Syntax**

```
ipv6 multicast route <ipv6-source-addr> <ipv6-group-addr>
<upstream-vlan-id> [<downstream-vlan-id>]
```

```
no ipv6 multicast route <ipv6-source-addr> <ipv6-group-addr>
[<upstream-vlan-id> <downstream-vlan-id>]
```

| Parameter | Description |
|---|---|
| *<ipv6-group-addr>* | Source IPv6 address, in dotted decimal notation in the format X.X::X.X. |
| *<ipv6-group-addr>* | Group IP address, in dotted decimal notation in the format X.X::X.X. |
| *<upstream-vlan-id>* | Upstream VLAN interface on which the multicast packets ingress. |
| *<downstream-vlan-id>* | Downstream VLAN interface or range of VLAN interfaces to which the multicast packets are sent. |

**Default** By default, no static routes exist.

**Mode** Global Configuration

**Usage notes** Only one multicast route entry per IPv6 address and multicast group can be specified. Therefore, if one entry for an IPv6 static multicast route is configured, PIM will not be able to update this multicast route in any way.

If a dynamic multicast route exists, you cannot create a static multicast route with the same source IPv6 address and group IPv6 address. An error message is displayed and logged. To add a new static multicast route, either wait for the dynamic multicast route to time out or clear the dynamic multicast route with the clear ipv6 mroute command.

To update an existing IPv6 static multicast route entry with new or additional downstream VLANs, you must firstly remove the existing static multicast route and then add the new static multicast route with all downstream VLANs specified. If

you attempt to update an existing static multicast route entry with an additional VLAN or VLANs an error message is displayed and logged.

To remove a specific downstream VLAN from an existing static multicast route entry, specify the VLAN you want to remove with the `<downstream-vlan-id>` parameter when entering the **no** variant of this command.

Note that if static IPv6 multicast routing is being used with EPSR and the destination VLAN is an EPSR data VLAN, then multicast router (mrouter) ports must be statically configured. This minimizes disruption for multicast traffic in the event of ring failure or restoration.

When configuring the EPSR data VLAN, statically configure mrouter ports so that the multicast router can be reached in either direction around the EPSR ring.

See ipv6 mld snooping mrouter for a command description and command examples.

## Examples

To create an IPv6 static multicast route for the multicast source IPv6 address `2001::1` and group IPv6 address `ff08::1`, specifying the upstream VLAN interface as `vlan10` and the downstream VLAN interface as `vlan20`, use the following commands:

```
awplus# configure terminal
awplus(config)# ipv6 multicast route 2001::1 ff08::1 vlan10
vlan20
```

To create a blackhole route for the IPv6 multicast source IP address 2001::1 and group IP address ff08::1, specifying the upstream VLAN interface as `vlan10`, use the following commands:

To create an IPv6 static multicast route for the multicast source IPv6 address 2001::1 and group IPv6 address ff08::1, specifying the upstream VLAN interface as `vlan10` and the downstream VLAN range as `vlan20-25`, use the following commands:

```
awplus# configure terminal
awplus(config)# ipv6 multicast route 2001::1 ff08::1 vlan10
vlan20-25
```

To remove the downstream VLAN 23 from the IPv6 static multicast route created with the above command, use the following commands:

```
awplus# configure terminal
awplus(config)# no ipv6 multicast route 2001::1 ff08::1 vlan10
vlan23
```

To delete an IPv6 static multicast route for the multicast source IPv6 address 2001::1 and group IPv6 address ff08::1, use the following commands:

```
awplus# configure terminal
awplus(config)# no ipv6 multicast route 2001::1 ff08::1
```

## Related commands

clear ipv6 mroute

ipv6 mld snooping mrouter

show ipv6 mroute

# ipv6 multicast route-limit

**Overview** Use this command to limit the number of multicast routes that can be added to an IPv6 multicast routing table.

Use the no variant of this command to return the IPv6 route limit to the default.

**Syntax**

```
ipv6 multicast route-limit <limit> [<threshold>]
no ipv6 multicast route-limit
```

| Parameter | Description |
|---|---|
| *<limit>* | *<1-2147483647>* Number of routes. |
| *<threshold>* | *<1-2147483647>* Threshold above which to generate a warning message. The mroute warning threshold must not exceed the mroute limit. |

**Default** The default limit and threshold value is 2147483647.

**Mode** Global Configuration

**Usage notes** This command limits the number of multicast IPv6 routes (mroutes) that can be added to a router, and generates an error message when the limit is exceeded. If the threshold parameter is set, a threshold warning message is generated when this threshold is exceeded, and the message continues to occur until the number of mroutes reaches the limit set by the limit argument.

**Examples**

```
awplus# configure terminal
awplus(config)# ipv6 multicast route-limit 34 24
awplus# configure terminal
awplus(config)# no ipv6 multicast route-limit
```

# ipv6 multicast-routing

**Overview**

Use this command to turn on/off IPv6 multicast routing on the router; when turned off the device does not perform multicast functions.

Use the **no** variant of this command to disable IPv6 multicast routing after enabling it. Note the default stated below.

**Syntax**

```
ipv6 multicast-routing
no ipv6 multicast-routing
```

**Default**

By default, IPv6 multicast routing is off.

**Mode**

Global Configuration

**Usage**

When the **no** variant of this command is used, the Multicast Routing Information Base (MRIB) cleans up Multicast Routing Tables (MRT, and stops relaying multicast forwarder events to multicast protocols.

When multicast routing is enabled, the MRIB starts processing any MRT addition/deletion requests, and any multicast forwarding events.

You must enable multicast routing before issuing other multicast commands.

**Examples**

```
awplus# configure terminal
awplus(config)# ipv6 multicast-routing
awplus# configure terminal
awplus(config)# no ipv6 multicast-routing
```

**Validation Commands**

show running-config

# multicast

**Overview**

Use this command to enable a device port to route multicast packets that ingress the port.

Use the **no** variant of this command to stop the device port from routing multicast packets that ingress the port. Note that this does not affect Layer 2 forwarding of multicast packets. If you enter **no multicast** on a port, multicast packets received on that port will not be forwarded to other VLANs, but ports in the same VLANs as the receiving port will still receive the multicast packets.

***CAUTION:*** *We do not recommend disabling multicast routing in a live network. Some non-multicast protocols use multicast packets and will not function correctly if you disable it.*

**Syntax**

```
multicast
no multicast
```

**Default**

By default, all device ports route multicast packets.

**Mode**

Interface Configuration

**Examples**

To disable routing of multicast packets on a port, use the commands:

```
awplus# configure terminal
awplus(config)# interface port1.0.1
awplus(config-if)# no multicast
```

To re-enable routing of multicast packets on a port, use the commands:

```
awplus# configure terminal
awplus(config)# interface port1.0.1
awplus(config-if)# multicast
```

**Validation Commands**

show running-config

# platform multicast-ratelimit

**Overview**

Use this command to set the maximum number of multicast packets to be forwarded to the CPU (in packets per second). Setting the value to zero disables rate limiting.

This command should be used with care. Increasing or removing the limit could make the device less responsive under heavy multicast load.

Use the **no** variant of this command to return the limit to its default.

**Syntax**

```
platform multicast-ratelimit <0-1000>
no platform multicast-ratelimit
```

**Default**

10 packets per second (pps)

**Mode**

Global Configuration

**Usage notes**

If you find that the CPU load on your device from multicast traffic is higher than desired, reducing this rate may reduce the CPU load.

If you need the device to process a large amount of multicast traffic, increasing this rate may improve performance.

**Example**

To set the rate to 30pps, use the commands:

```
awplus# configure terminal
awplus(config)# platform multicast-ratelimit 30
```

**Command changes**

Version 5.4.8-1.1: default changed to 100pps on SBx908 GEN2, SBx8100, and x930 Series switches.

# show debugging nsm mcast

**Overview** Use this command to show the status of the NSM multicast debugging.

**Syntax**

```
show debugging nsm mcast
```

| Parameter | Description |
|---|---|
| *<vrf-name>* | VRF instance name |

**Mode** Privileged Exec

**Usage notes** This command is intended for use by Allied Telesis authorized service personnel for diagnostic purposes.

**Example** To show debugging for NSM multicast, use the following command:

```
awplus# show debug nsm mcast
```

**Output** Figure 38-1: Example output from **show debug nsm mcast**

```
awplus# show debugging nsm mcast
Debugging status:
  NSM multicast vif debugging is on
  NSM multicast route debugging is on
  NSM multicast route statistics debugging is on
  NSM multicast FIB message debugging is on
  NSM multicast PIM Register message debugging is on
  NSM multicast traceroute debugging is on
  NSM multicast traceroute detailed debugging is on
```

**Related commands** debug nsm mcast

**Command changes** Version 5.4.7-2.1: command added

Version 5.4.8-1.1: VRF-lite support added x930, SBx908 GEN2

# show ip mroute

**Overview** Use this command to display the contents of the IPv4 multicast routing (mroute) table.

**Syntax**

```
show ip mroute [<ipv4-group-addr>] [<ipv4-source-addr>]
[dense|sparse] [count|summary]
```

| Parameter | Description |
|---|---|
| `<ipv4-group-addr>` | Group IPv4 address, in dotted decimal notation in the format A.B.C.D. |
| `<ipv4-source-addr>` | Source IPv4 address, in dotted decimal notation in the format A.B.C.D. |
| `dense` | Display dense IPv4 multicast routes. |
| `sparse` | Display sparse IPv4 multicast routes. |
| `count` | Display the route and packet count from the IPv4 multicast routing (mroute) table. |
| `summary` | Display the contents of the IPv4 multicast routing (mroute) table in an abbreviated form. |

**Mode** User Exec and Privileged Exec

**Examples**

```
awplus# show ip mroute 10.10.3.34 224.1.4.3
awplus# show ip mroute 10.10.5.24 225.2.2.2 count
awplus# show ip mroute 10.10.1.34 summary
```

**Output** The following is a sample output of this command displaying the IPv4 multicast routing table, with and without specifying the group and source IPv4 address:

Figure 38-2: Example output from the **show ip mroute** command

```
awplus# show ip mroute
IP Multicast Routing Table
Flags: I - Immediate Stat, T - Timed Stat, F - Forwarder
installed
Timers: Uptime/Stat Expiry
Interface State: Interface (TTL)

(10.10.1.52, 224.0.1.3), uptime 00:00:31, stat expires 00:02:59
Owner PIM-SM, Flags: TF
  Incoming interface: vlan2
  Outgoing interface list:
   vlan3 (1)
```

Figure 38-3: Example output from the **show ip mroute** command with the source and group IPv4 address specified

```
awplus# show ip mroute 10.10.1.52 224.0.1.3

IP Multicast Routing Table
Flags: I - Immediate Stat, T - Timed Stat, F - Forwarder
installed
Timers: Uptime/Stat Expiry
Interface State: Interface (TTL)

(10.10.1.52, 224.0.1.3), uptime 00:03:24, stat expires 00:01:28
Owner PIM-SM, Flags: TF
  Incoming interface: vlan2
  Outgoing interface list:
    vlan3 (1)
```

The following is a sample output of this command displaying the packet count from the IPv4 multicast routing table:

Figure 38-4: Example output from the **show ip mroute count** command

```
awplus# show ip mroute count
IP Multicast Statistics
Total 1 routes using 132 bytes memory
Route limit/Route threshold: 2147483647/2147483647
Total NOCACHE/WRONGVIF/WHOLEPKT recv from fwd: 1/0/0
Total NOCACHE/WRONGVIF/WHOLEPKT sent to clients: 1/0/0
Immediate/Timed stat updates sent to clients: 0/0
Reg ACK recv/Reg NACK recv/Reg pkt sent: 0/0/0
Next stats poll: 00:01:10

Forwarding Counts: Pkt count/Byte count, Other Counts: Wrong If
pkts
Fwd msg counts: WRONGVIF/WHOLEPKT recv
Client msg counts: WRONGVIF/WHOLEPKT/Imm Stat/Timed Stat sent
Reg pkt counts: Reg ACK recv/Reg NACK recv/Reg pkt sent

(10.10.1.52, 224.0.1.3), Forwarding: 2/19456, Other: 0
  Fwd msg: 0/0, Client msg: 0/0/0/0,  Reg: 0/0/0
```

The following is a sample output for this command displaying the IPv4 multicast routing table in an abbreviated form:

Figure 38-5: Example output from the **show ip mroute summary** command

```
awplus# show ip mroute summary

IP Multicast Routing Table
Flags: I - Immediate Stat, T - Timed Stat, F - Forwarder
installed
Timers: Uptime/Stat Expiry
Interface State: Interface (TTL)

(10.10.1.52, 224.0.1.3), 00:01:32/00:03:20, PIM-SM, Flags: TF
```

**Command changes**

Version 5.4.7-1.1: VRF-lite support added SBx8100.

Version 5.4.8-1.1: VRF-lite support added x930, SBx908 GEN2.

# show ip mvif

**Overview** Use this command to display the contents of the IPv4 Multicast Routing Information Base (MRIB) VIF table.

**Syntax** `show ip mvif <interface>`

| Parameter | Description |
|---|---|
| *<interface>* | The interface to display information about. |

**Mode** User Exec and Privileged Exec

**Example** `awplus# show ip mvif vlan2`

**Output** Figure 38-6: Example output from the **show ip mvif** command

```
Interface     Vif    Owner     TTL  Local            Remote         Uptime
              Idx    Module        Address          Address
vlan2         0      PIM-SM    1    192.168.1.53     0.0.0.0        00:04:26
Register      1                1    192.168.1.53     0.0.0.0        00:04:26
vlan3         2      PIM-SM    1    192.168.10.53    0.0.0.0        00:04:25
```

Figure 38-7: Example output from the **show ip mvif** command with the interface parameter **vlan2** specified

```
Interface     Vif    Owner     TTL  Local            Remote           Uptime
              Idx    Module        Address          Address
vlan2         0      PIM-SM    1    192.168.1.53     0.0.0.0          00:05:17
```

**Command changes** Version 5.4.7-1.1: VRF-lite support added SBx8100.

Version 5.4.8-1.1: VRF-lite support added x930, SBx908 GEN2.

# show ip rpf

**Overview** Use this command to display Reverse Path Forwarding (RPF) information for the specified IPv4 source address.

**Syntax**

```
show ip rpf <source-addr>
```

| Parameter | Description |
|---|---|
| `<source-addr>` | Source IPv4 address, in dotted decimal notation in the format A.B.C.D. |

**Mode** User Exec and Privileged Exec

**Example**

```
awplus# show ip rpf 10.10.10.50
```

**Command changes** Version 5.4.7-1.1: VRF-lite support added SBx8100.

Version 5.4.8-1.1: VRF-lite support added x930, SBx908 GEN2.

# show ipv6 mroute

**Overview** Use this command to display the contents of the IPv6 multicast routing (mroute) table.

**Syntax**

```
show ipv6 mroute [<ipv6-group-addr>] [<ipv6-source-addr>]
[{count|summary}]
```

| Parameter | Description |
|---|---|
| *<ipv6-group-addr>* | Group IPv6 address, in hexadecimal notation in the format X.X::X.X. |
| *<ipv6-source-addr>* | Source IPv6 address, in hexadecimal notation in the format X.X::X.X. |
| `count` | Display the route and packet count from the IPv6 multicast routing (mroute) table. |
| `summary` | Display the contents of the IPv6 multicast routing (mroute) table in an abbreviated form. |

**Mode** User Exec and Privileged Exec

**Examples**

```
awplus# show ipv6 mroute
awplus# show ipv6 mroute count
awplus# show ipv6 mroute summary
awplus# show ipv6 mroute 2001::2 ff08::1 count
awplus# show ipv6 mroute 2001::2 ff08::1
awplus# show ipv6 mroute 2001::2 summary
```

**Output** The following is a sample output of this command displaying the IPv6 multicast routing table for a single static IPv6 Multicast route:

Figure 38-8: Example output from the **show ipv6 mroute** command

```
awplus#show ipv6 mroute
IPv6 Multicast Routing Table
Flags: I - Immediate Stat, T - Timed Stat, F - Forwarder
installed
Timers: Uptime/Stat Expiry
Interface State: Interface
(2001::2, ff08::1), uptime 03:18:38
Owner IMI, Flags: F
  Incoming interface: vlan2
  Outgoing interface list:
    vlan3
```

The following is a sample output of this command displaying the IPv6 multicast routing count table for a single static IPv6 Multicast route:

Figure 38-9: Example output from the **show ipv6 mroute count** command

```
awplus#show ipv6 mroute count

IPv6 Multicast Statistics
Total 1 routes using 152 bytes memory
Route limit/Route threshold: 1024/1024
Total NOCACHE/WRONGmif/WHOLEPKT recv from fwd: 6/0/0
Total NOCACHE/WRONGmif/WHOLEPKT sent to clients: 6/0/0
Immediate/Timed stat updates sent to clients: 0/0
Reg ACK recv/Reg NACK recv/Reg pkt sent: 0/0/0
Next stats poll: 00:01:14

Forwarding Counts: Pkt count/Byte count, Other Counts: Wrong If
pkts
Fwd msg counts: WRONGmif/WHOLEPKT recv
Client msg counts: WRONGmif/WHOLEPKT/Imm Stat/Timed Stat sent
Reg pkt counts: Reg ACK recv/Reg NACK recv/Reg pkt sent

(2001::2, ff08::1), Forwarding: 0/0, Other: 0
  Fwd msg: 0/0, Client msg: 0/0/0/0,  Reg: 0/0/0
```

The following is a sample output of this command displaying the IPv6 multicast routing summary table for a single static IPv6 Multicast route:

Figure 38-10: Example output from the **show ipv6 mroute summary** command

```
awplus#show ipv6 mroute summary
IPv6 Multicast Routing Table
Flags: I - Immediate Stat, T - Timed Stat, F - Forwarder
installed
Timers: Uptime/Stat Expiry
Interface State: Interface

(2001::2, ff08::1), 03:20:28/-, IMI, Flags: F
```

# show ipv6 multicast forwarding

**Overview** Use this command to view the status of multicast forwarding slow-path-packet setting.

**Syntax**

```
show ipv6 multicast forwarding
```

**Mode** User Exec

**Example** To show the status of the multicast forwarding, slow-path-packet setting, use the following command:

```
awplus# show ipv6 multicast forwarding
```

**Output** Figure 38-11: Example output from the **show ipv6 multicast forwarding** command:

```
ipv6 multicast forwarding is disabled
```

**Related commands** ipv6 multicast forward-slow-path-packet

# show ipv6 mif

**Overview** Use this command to display the contents of the IPv6 Multicast Routing Information Base (MRIB) MIF table.

**Syntax** `show ipv6 mif [<interface>]`

| Parameter | Description |
|---|---|
| *<interface>* | The interface to display information about. |

**Mode** User Exec and Privileged Exec

**Example**

```
awplus# show ipv6 mif
awplus# show ipv6 mif vlan2
```

**Output** Figure 38-12: Example output from the **show ipv6 mif** command

```
awplus#show ipv6 mif
Interface    Mif    Owner            Uptime
             Idx    Module
vlan3        0      MLD/MLD Proxy-Service 03:28:48
vlan2        1      MLD/MLD Proxy-Service 03:28:48
vlan1        2      MLD/MLD Proxy-Service 03:28:48
```

Figure 38-13: Example output from the **show ipv6 mif** command with the interface parameter **vlan2** specified

```
Interface    Mif    Owner     TTL    Remote            Uptime
             Idx    Module          Address
vlan2        0      PIM-SMv6   1     0.0.0.0           00:05:17
```

# 39 PIM-SM Commands

## Introduction

**Overview** This chapter provides an alphabetical reference of PIM-SM commands. For commands common to PIM-SM and PIM-DM, see the Multicast Commands chapter.

**Command List**


- "clear ip pim sparse-mode bsr rp-set *" on page 1869
- "clear ip pim sparse-mode packet statistics" on page 1870
- "clear ip mroute pim sparse-mode" on page 1871
- "debug pim sparse-mode" on page 1872
- "debug pim sparse-mode timer" on page 1873
- "ip pim anycast-rp" on page 1875
- "ip pim bsr-border" on page 1876
- "ip pim bsr-candidate" on page 1877
- "ip pim cisco-register-checksum" on page 1878
- "ip pim crp-cisco-prefix" on page 1879
- "ip pim dr-priority" on page 1880
- "ip pim exclude-genid" on page 1881
- "ip pim ext-srcs-directly-connected" on page 1882
- "ip pim hello-holdtime (PIM-SM)" on page 1883
- "ip pim hello-interval (PIM-SM)" on page 1884
- "ip pim ignore-rp-set-priority" on page 1885
- "ip pim jp-timer" on page 1886
- "ip pim register-rate-limit" on page 1887
- "ip pim register-rp-reachability" on page 1888

- "ip pim register-source" on page 1889
- "ip pim register-suppression" on page 1890
- "ip pim rp-address" on page 1891
- "ip pim rp-candidate" on page 1893
- "ip pim rp-register-kat" on page 1894
- "ip pim sparse-mode" on page 1895
- "ip pim sparse-mode join-prune-batching" on page 1896
- "ip pim sparse-mode passive" on page 1898
- "ip pim sparse-mode wrong-vif-suppression" on page 1899
- "ip pim spt-threshold" on page 1901
- "ip pim ssm" on page 1902
- "service pim" on page 1903
- "show debugging pim sparse-mode" on page 1904
- "show ip pim sparse-mode bsr-router" on page 1905
- "show ip pim sparse-mode interface" on page 1906
- "show ip pim sparse-mode interface detail" on page 1908
- "show ip pim sparse-mode local-members" on page 1909
- "show ip pim sparse-mode mroute" on page 1910
- "show ip pim sparse-mode mroute detail" on page 1912
- "show ip pim sparse-mode neighbor" on page 1914
- "show ip pim sparse-mode nexthop" on page 1915
- "show ip pim sparse-mode packet statistics" on page 1916
- "show ip pim sparse-mode rp-hash" on page 1917
- "show ip pim sparse-mode rp mapping" on page 1918
- "undebug all pim sparse-mode" on page 1919

# clear ip pim sparse-mode bsr rp-set *

**Overview** Use this command to clear all Rendezvous Point (RP) sets learned through the PIMv2 Bootstrap Router (BSR).

**Syntax**

```
clear ip pim sparse-mode bsr rp-set *
```

| Parameter | Description |
|---|---|
| * | Clears all RP sets. |

**Mode** Privileged Exec

**Usage notes** For multicast clients, note that one router will be automatically or statically designated as the RP, and all routers must explicitly join through the RP. A Designated Router (DR) sends periodic Join/Prune messages toward a group-specific RP for each group that it has active members.

For multicast sources, note that the Designated Router (DR) unicasts Register messages to the RP encapsulating the data packets from the multicast source. The RP forwards decapsulated data packets toward group members.

**Example**

```
awplus# clear ip pim sparse-mode bsr rp-set *
```

**Command changes** Version 5.4.7-1.1: VRF-lite support added SBx8100.

Version 5.4.8-1.1: VRF-lite support added x930, SBx908 GEN2.

# clear ip pim sparse-mode packet statistics

**Overview** Use this command to clear the PIM sparse mode packet statistics counter.

**Syntax**

```
clear ip pim sparse-mode packet statistics
```

**Mode** Privileged Exec

**Example** The following command clears the current packet receive counts for PIM sparse-mode:

```
awplus# configure terminal
awplus(config)# clear ip pim sparse-mode statistics
```

**Output** Figure 39-1: Example output from **clear ip pim sparse-mode statistics**

```
awplus(config)#clear ip pim sparse-mode statistics
PIM-SM Receive Packet Statistics :
All PIM-SM    :   Total : 0   Valid : 0
Hello         :   Total : 0   Valid : 0
Register      :   Total : 0   Valid : 0
Register Stop :   Total : 0   Valid : 0
Join/Prune    :   Total : 0   Valid : 0
Bootstrap     :   Total : 0   Valid : 0
Assert        :   Total : 0   Valid : 0
Candidate-RP  :   Total : 0   Valid : 0
```

**Related commands** show ip pim sparse-mode packet statistics

**Command changes** Version 5.4.7-1.1: VRF-lite support added SBx8100.

Version 5.4.8-1.1: VRF-lite support added x930, SBx908 GEN2.

# clear ip mroute pim sparse-mode

**Overview** Use this command to clear all multicast route table entries learned through PIM-SM for a specified multicast group address, and optionally a specified multicast source address.

**Syntax**

```
clear ip mroute <Group-IP-address> pim sparse-mode
clear ip mroute <Group-IP-address> <Source-IP-address> pim sparse-mode
```

| Parameter | Description |
|---|---|
| *<Group-IP-address>* | Specify a multicast group IPv6 address, entered in the form A.B.C.D. |
| *<Source-IP-address>* | Specify a source group IP address, entered in the form A.B.C.D. |

**Mode** Privileged Exec

**Example**

```
awplus# clear ip mroute  pim sparse-mode 224.0.0.0
awplus# clear ip mroute  192.168.7.1 pim sparse-mode 224.0.0.0
```

**Command changes** Version 5.4.7-1.1: VRF-lite support added SBx8100.

Version 5.4.8-1.1: VRF-lite support added x930, SBx908 GEN2.

# debug pim sparse-mode

**Overview**

Use this command to turn on some or all PIM-SM debugging.

Use the **no** variant of this command to turn off some or all PIM-SM debugging.

**Syntax**

```
debug pim sparse-mode [all] [events] [mfc] [mib] [nexthop] [nsm]
[packet] [state] [mtrace]
```

```
no debug pim sparse-mode [all] [events] [mfc] [mib] [nexthop]
[nsm] [packet] [state] [mtrace]
```

| Parameter | Description |
|---|---|
| `all` | Activates/deactivates all PIM-SM debugging. |
| `events` | Activates debug printing of events. |
| `mfc` | Activates debug printing of MFC (Multicast Forwarding Cache in kernel) add/delete/updates. |
| `mib` | Activates debug printing of PIM-SM MIBs. |
| `nexthop` | Activates debug printing of PIM-SM next hop communications. |
| `nsm` | Activates debugging of PIM-SM Network Services Module communications. |
| `packet` | Activates debug printing of incoming and/or outgoing packets. |
| `state` | Activates debug printing of state transition on all PIM-SM FSMs. |
| `mtrace` | Activates debug printing of multicast traceroute. |

**Mode**

Privileged Exec and Global Configuration

**Example**

```
awplus# configure terminal
awplus(config)# debug pim sparse-mode all
```

**Related commands**

show debugging pim sparse-mode

**Command changes**

Version 5.4.7-1.1: VRF-lite support added SBx8100.

Version 5.4.8-1.1: VRF-lite support added x930, SBx908 GEN2.

# debug pim sparse-mode timer

**Overview** Use this command to enable debugging for the specified PIM-SM timers.

Use the **no** variants of this command to disable debugging for the specified PIM-SM timers.

**Syntax**

```
debug pim sparse-mode timer assert [at]
no debug pim sparse-mode timer assert [at]
debug pim sparse-mode timer bsr [bst|crp]
no debug pim sparse-mode timer bsr [bst|crp]
debug pim sparse-mode timer hello [ht|nlt|tht]
no debug pim sparse-mode timer hello [ht|nlt|tht]
debug pim sparse-mode timer joinprune [jt|et|ppt|kat|ot]
no debug pim sparse-mode timer joinprune [jt|et|ppt|kat|ot]
debug pim sparse-mode timer register [rst]
no debug pim sparse-mode timer register [rst]
```

| Parameter | Description |
|---|---|
| assert | Enable or disable debugging for the Assert timers. |
| at | Enable or disable debugging for the Assert Timer. |
| bsr | Enable or disable debugging for the specified Bootstrap Router timer, or all Bootstrap Router timers. |
| bst | Enable or disable debugging for the Bootstrap Router: Bootstrap Timer. |
| crp | Enable or disable debugging for the Bootstrap Router: Candidate-RP Timer. |
| hello | Enable or disable debugging for the specified Hello timer, or all Hello timers. |
| ht | Enable or disable debugging for the Hello timer: Hello Timer. |
| nlt | Enable or disable debugging for the Hello timer: Neighbor Liveness Timer. |
| tht | Enable or disable debugging for the Hello timer: Triggered Hello Timer. |
| joinprune | Enable or disable debugging for the specified JoinPrune timer, or all JoinPrune timers. |
| jt | Enable or disable debugging for the JoinPrune timer: upstream Join Timer. |
| et | Enable or disable debugging for the JoinPrune timer: Expiry Timer. |
| ppt | Enable or disable debugging for the JoinPrune timer: PrunePending Timer. |

| Parameter | Description |
|---|---|
| kat | Enable or disable debugging for the JoinPrune timer: KeepAlive Timer. |
| ot | Enable or disable debugging for the JoinPrune timer: Upstream Override Timer. |
| register | Enable or disable debugging for the Register timers. |
| rst | Enable or disable debugging for the Register timer: Register Stop Timer. |

**Default** By default, all debugging is disabled.

**Mode** Privileged Exec and Global Configuration

**Examples** To enable debugging for the PIM-SM Bootstrap Router bootstrap timer, use the commands:

```
awplus(config)# debug pim sparse-mode timer bsr bst
```

To enable debugging for the PIM-SM Hello: neighbor liveness timer, use the command:

```
awplus(config)# debug pim sparse-mode timer hello ht
```

To enable debugging for the PIM-SM Joinprune expiry timer, use the command:

```
awplus# debug pim sparse-mode timer joinprune et
```

To disable debugging for the PIM-SM Register timer, use the command:

```
awplus# no debug pim sparse-mode timer register
```

**Related commands** show debugging pim sparse-mode

**Command changes** Version 5.4.7-1.1: VRF-lite support added SBx8100.

Version 5.4.8-1.1: VRF-lite support added x930, SBx908 GEN2.

# ip pim anycast-rp

**Overview** Use this command to configure Anycast RP (Rendezvous Point) in a RP set.

Use the **no** variant of this command to remove the configuration.

**Syntax**

```
ip pim anycast-rp <anycast-rp-address> <member-rp-address>
no ip pim anycast-rp <anycast-rp-address> [<member-rp-address>]
```

| Parameter | Description |
|---|---|
| *<anycast-rp-address>* | <A.B.C.D> Specify an anycast IP address to configure an Anycast RP (Rendezvous Point) in a RP set. |
| *<member-rp-address>* | <A.B.C.D> Specify an Anycast RP (Rendezvous Point) address to configure an Anycast RP in a RP set. |

**Mode** Global Configuration

**Usage notes** Anycast is a network addressing and routing scheme where data is routed to the nearest or best destination as viewed by the routing topology. Compared to unicast with a one-to- one association between network address and network endpoint, and multicast with a one-to-many association between network address and network endpoint; anycast has a one-to-many association between network address and network endpoint. For anycast, each destination address identifies a set of receiver endpoints, from which only one receiver endpoint is chosen.

Anycast is often implemented using BGP to simultaneously advertise the same destination IP address range from many sources, resulting in packets address to destination addresses in this range being routed to the nearest source announcing the given destination IP address.

Use this command to specify the Anycast RP configuration in the Anycast RP set. Use the **no** variant of this command to remove the Anycast RP configuration. Note that the member RP address is optional when using the **no** parameter to remove the Anycast RP configuration. removing the anycast RP address also removes the member RP address.

**Examples** The following example shows how to configure the Anycast RP address with **ip pim anycast-rp**:

```
awplus# configure terminal
awplus(config)# ip pim anycast-rp 1.1.1.1 10.10.10.10
```

The following example shows how to remove the Anycast RP in the RP set specifying only the anycast RP address with **no ip pim anycast-rp**, but not specifying the member RP address:

```
awplus# configure terminal
awplus(config)# no ip pim anycast-rp 1.1.1.1
```

# ip pim bsr-border

**Overview**

Use the **ip pim bsr-border** command to prevent Bootstrap Router (BSR) messages from being sent or received through a VLAN interface. The BSR border is the border of the PIM domain.

Use the **no** variant of this command to disable the configuration set with **ip pim bsr-border**.

**Syntax**

```
ip pim bsr-border
no ip pim bsr-border
```

**Mode**

Interface Configuration for a VLAN interface or a PPP interface.

**Usage notes**

When this command is configured on a VLAN interface, no PIM version 2 BSR messages will be sent or received through the interface. Configure an interface bordering another PIM domain with this command to avoid BSR messages from being exchanged between the two PIM domains.

BSR messages should not be exchanged between different domains, because devices in one domain may elect Rendezvous Points (RPs) in the other domain, resulting in loss of isolation between the two PIM domains that would stop the PIM protocol from working as intended.

**Examples**

The following example configures the VLAN interface vlan2 to be the PIM domain border:

```
awplus# configure terminal
awplus(config)# interface vlan2
awplus(config-if)# ip pim bsr-border
```

The following example removes the VLAN interface vlan2 from the PIM domain border:

```
awplus# configure terminal
awplus(config)# interface vlan2
awplus(config-if)# no ip pim bsr-border
```

The following example configures the PPP interface ppp0 to be the PIM domain border:

```
awplus# configure terminal
awplus(config)# interface ppp0
awplus(config-if)# ip pim bsr-border
```

The following example removes the PPP interface ppp0 from the PIM domain border:

```
awplus# configure terminal
awplus(config)# interface ppp0
awplus(config-if)# no ip pim bsr-border
```

# ip pim bsr-candidate

**Overview** Use this command to give the device the candidate BSR (Bootstrap Router) status using the specified IP address mask of the interface.

Use the **no** variant of this command to withdraw the address of the interface from being offered as a BSR candidate.

**Syntax**

```
ip pim bsr-candidate <interface> [<hash>] [<priority>]
no ip pim bsr-candidate [<interface>]
```

| Parameter | Description |
|---|---|
| *<interface>* | The interface. For instance, `vlan2`. |
| *<hash>* | <0-32> configure hash mask length for RP selection. The default hash value if you do not configure this parameter is 10. |
| *<priority>* | <0-255> configure priority for a BSR candidate. Note that you must also specify the *<hash>* (mask length) when specifying the *<priority>*. The default priority if you do not configure this parameter is 64. |

**Mode** Global Configuration

**Default** The default hash parameter value is 10 and the default priority parameter value is 64.

**Examples** To set the BSR candidate to the VLAN interface vlan2, with the optional mask length and BSR priority parameters, enter the commands shown below:

```
awplus# configure terminal
awplus(config)# ip pim bsr-candidate vlan2 20 30
```

To withdraw the address of vlan2 from being offered as a BSR candidate, enter:

```
awplus# configure terminal
awplus(config)# no ip pim bsr-candidate vlan2
```

To set the BSR candidate to the PPP interface ppp0, with the optional mask length and BSR priority parameters, enter the commands shown below:

```
awplus# configure terminal
awplus(config)# ip pim bsr-candidate ppp0 20 30
```

To withdraw the address of ppp0 from being offered as a BSR candidate, enter:

```
awplus# configure terminal
awplus(config)# no ip pim bsr-candidate ppp0
```

**Command changes** Version 5.4.7-1.1: VRF-lite support added SBx8100.

Version 5.4.8-1.1: VRF-lite support added x930, SBx908 GEN2.

# ip pim cisco-register-checksum

**Overview**

Use this command to configure the option to calculate the Register checksum over the whole packet. This command is used to inter-operate with older Cisco IOS versions.

Use the **no** variant of this command to disable this option.

**Syntax**

```
ip pim cisco-register-checksum
no ip pim cisco-register-checksum
```

**Default**

This command is disabled by default. By default, Register Checksum is calculated only over the header.

**Mode**

Global Configuration

**Example**

```
awplus# configure terminal
awplus(config)# ip pim cisco-register-checksum
```

**Command changes**

Version 5.4.7-1.1: VRF-lite support added SBx8100.

Version 5.4.8-1.1: VRF-lite support added x930, SBx908 GEN2.

# ip pim crp-cisco-prefix

**Overview**

Use this command to interoperate with Cisco devices that conform to an earlier draft standard. Some Cisco devices might not accept candidate RPs with a group prefix number of zero. Note that the latest BSR specification prohibits sending RP advertisements with prefix 0. RP advertisements for the default IPv4 multicast group range 224/4 are sent with a prefix of 1.

Use the **no** variant of this command to revert to the default settings.

**Syntax**

```
ip pim crp-cisco-prefix
no ip pim crp-cisco-prefix
```

**Mode**

Global Configuration

**Usage notes**

Cisco's BSR code does not conform to the latest BSR draft. It does not accept candidate RPs with a group prefix number of zero. To make the candidate RP work with a Cisco BSR, use the **ip pim crp-cisco-prefix** command when interoperating with older versions of Cisco IOS.

**Example**

```
awplus# configure terminal
awplus(config)# ip pim crp-cisco-prefix
awplus# configure terminal
awplus(config)# no ip pim crp-cisco-prefix
```

**Related commands**

ip pim rp-candidate

**Command changes**

Version 5.4.7-1.1: VRF-lite support added SBx8100.

Version 5.4.8-1.1: VRF-lite support added x930, SBx908 GEN2.

# ip pim dr-priority

**Overview** Use this command to set the Designated Router priority value.

Use the **no** variant of this command to disable this function.

**Syntax**

```
ip pim dr-priority <priority>
no ip pim dr-priority [<priority>]
```

| Parameter | Description |
|---|---|
| *<priority>* | <0-4294967294><br>The Designated Router priority value.<br>A higher value has a higher preference. |

**Default** The default is 1. The negated form of this command restores the value to the default.

**Mode** Interface Configuration for a VLAN interface or a PPP interface.

**Examples** To set the Designated Router priority value to 11234 for the VLAN interface vlan2, apply the commands as shown below:

```
awplus# configure terminal
awplus(config)# interface vlan2
awplus(config-if)# ip pim dr-priority 11234
```

To disable the Designated Router priority value for the VLAN interface vlan2, apply the commands as shown below:

```
awplus# configure terminal
awplus(config)# interface vlan2
awplus(config-if)# no ip pim dr-priority
```

To set the Designated Router priority value to 11234 for the PPP interface ppp0, apply the commands as shown below:

```
awplus# configure terminal
awplus(config)# interface ppp0
awplus(config-if)# ip pim dr-priority 11234
```

To disable the Designated Router priority value for the PPP interface ppp0, apply the commands as shown below:

```
awplus# configure terminal
awplus(config)# interface ppp0
awplus(config-if)# no ip pim dr-priority
```

**Related commands** ip pim ignore-rp-set-priority

# ip pim exclude-genid

**Overview** Use this command to exclude the GenID option from Hello packets sent out by the PIM module on a particular interface.This command is used to inter-operate with older Cisco IOS versions.

Use the **no** variant of this command to revert to default settings.

**Syntax**

```
ip pim exclude-genid
no ip pim exclude-genid
```

**Default** By default, this command is disabled; the GenID option is included.

**Mode** Interface Configuration for a VLAN interface or a PPP interface.

**Example**

```
awplus# configure terminal
awplus(config)# interface vlan2
awplus(config-if)# ip pim exclude-genid
awplus# configure terminal
awplus(config)# interface ppp0
awplus(config-if)# ip pim exclude-genid
```

# ip pim ext-srcs-directly-connected

**Overview** Use this command to configure PIM to treat all source traffic arriving on the interface as though it was sent from a host directly connected to the interface.

Use the **no** variant of this command to configure PIM to treat only directly connected sources as directly connected.

**Syntax**

```
ip pim ext-srcs-directly-connected
no ip pim ext-srcs-directly-connected
```

**Default** The **no** variant of this command is the default behavior.

**Mode** Interface Configuration for a VLAN interface or a PPP interface.

**Example** To configure PIM to treat all sources as directly connected for VLAN interface vlan2, use the following commands:

```
awplus# configure terminal
awplus(config)# interface vlan2
awplus(config-if)# ip pim ext-srcs-directly-connected
```

To configure PIM to treat only directly connected sources as directly connected for VLAN interface vlan2, use the following commands:

```
awplus# configure terminal
awplus(config)# interface vlan2
awplus(config-if)# no ip pim ext-srcs-directly-connected
```

To configure PIM to treat all sources as directly connected for PPP interface ppp0, use the following commands:

```
awplus# configure terminal
awplus(config)# interface ppp0
awplus(config-if)# ip pim ext-srcs-directly-connected
```

To configure PIM to treat only directly connected sources as directly connected for PPP interface ppp0, use the following commands:

```
awplus# configure terminal
awplus(config)# interface ppp0
awplus(config-if)# no ip pim ext-srcs-directly-connected
```

# ip pim hello-holdtime (PIM-SM)

**Overview** This command configures a hello-holdtime value. You cannot configure a hello-holdtime value that is less than the current hello-interval.

Use the **no** variant of this command to return it to its default of 3.5 * the current hello-interval.

**Syntax**

```
ip pim hello-holdtime <holdtime>
no ip pim hello-holdtime
```

| Parameter | Description |
|---|---|
| *<holdtime>* | <1-65535><br>The holdtime value in seconds (no fractional seconds are accepted). |

**Default** The default hello-holdtime value is 3.5 * the current hello-interval. The default hello- holdtime is restored using the negated form of this command.

**Mode** Interface Configuration for a VLAN interface or a PPP interface.

**Usage** Each time the hello interval is updated, the hello holdtime is also updated, according to the following rules:

If the hello holdtime is not configured; or if the hello holdtime is configured and less than the current hello-interval value, it is modified to the (3.5 * hello interval). Otherwise, it retains the configured value.

**Example**

```
awplus# configure terminal
awplus(config)# interface vlan2
awplus(config-if)# ip pim hello-holdtime 123
awplus# configure terminal
awplus(config)# interface ppp0
awplus(config-if)# ip pim hello-holdtime 123
```

# ip pim hello-interval (PIM-SM)

**Overview** This command configures a hello-interval value.

Use the **no** variant of this command to reset the hello-interval to the default.

**Syntax**

```
ip pim hello-interval <interval>
no ip pim hello-interval
```

| Parameter | Description |
|---|---|
| *<interval>* | <1-65535> The value in seconds (no fractional seconds accepted). |

**Default** The default hello-interval value is 30 seconds. The default is restored using the negated form of this command.

**Mode** Interface Configuration for a VLAN interface or a PPP interface.

**Usage** When the hello interval is configured, and the hello holdtime is not configured, or when the configured hello-holdtime value is less than the new hello-interval value; the holdtime value is modified to the (3.5 * hello interval). Otherwise, the hello-holdtime value is the configured value.

**Example**

```
awplus# configure terminal
awplus(config)# interface vlan2
awplus(config-if)# ip pim hello-interval 123
awplus# configure terminal
awplus(config)# interface ppp0
awplus(config-if)# ip pim hello-interval 123
```

# ip pim ignore-rp-set-priority

**Overview** Use this command to ignore the RP-SET priority value, and use only the hashing mechanism for RP selection.

This command is used to inter-operate with older Cisco IOS versions.

Use the **no** variant of this command to disable this setting.

**Syntax**

```
ip pim ignore-rp-set-priority
no ip pim ignore-rp-set-priority
```

**Mode** Global Configuration

**Example**

```
awplus# configure terminal
awplus(config)# ip pim ignore-rp-set-priority
```

# ip pim jp-timer

**Overview** Use this command to set the PIM-SM join/prune timer. Note that the value the device puts into the holdtime field of the join/prune packets it sends to its neighbors is 3.5 times the join/prune timer value set using this command.

Use the **no** variant of this command to return the PIM-SM join/prune timer to its default value of 60 seconds, which corresponds to a join/prune packet holdtime of 210 seconds.

**Syntax**

```
ip pim jp-timer <1-65535>
no ip pim jp-timer [<1-65535>]
```

| Parameter | Description |
|---|---|
| *<1-65535>* | Specifies the join/prune timer value. The default value is 60 seconds. |

**Default** The default join/prune timer value is 60 seconds.

**Mode** Global Configuration

**Example** To set the join/prune timer value to 300 seconds, use the commands:

```
awplus# configure terminal
awplus(config)# ip pim jp-timer 300
```

To return the join/prune timer to its default value of 60 seconds, use the commands:

```
awplus# configure terminal
awplus(config)# no ip pim jp-timer
```

**Command changes** Version 5.4.7-1.1: VRF-lite support added SBx8100.

Version 5.4.8-1.1: VRF-lite support added x930, SBx908 GEN2.

# ip pim register-rate-limit

**Overview** Use this command to configure the rate of register packets sent by this DR, in units of packets per second.

Use the **no** variant of this command to remove the limit.

**Syntax**

```
ip pim register-rate-limit <1-65535>
no ip pim register-rate-limit
```

| Parameter | Description |
|---|---|
| *<1-65535>* | Specifies the maximum number of packets that can be sent per second. |

**Mode** Global Configuration

**Example**

```
awplus# configure terminal
awplus(config)# ip pim register-rate-limit 3444
```

**Command changes** Version 5.4.7-1.1: VRF-lite support added SBx8100.

Version 5.4.8-1.1: VRF-lite support added x930, SBx908 GEN2.

# ip pim register-rp-reachability

**Overview** Use this command to enable the RP reachability check for PIM Register processing at the DR. The default setting is no checking for RP-reachability.

Use the **no** variant of this command to disable this processing.

**Syntax**

```
ip pim register-rp-reachability
no ip pim register-rp-reachability
```

**Default** This command is disabled; by default, there is no checking for RP-reachability.

**Mode** Global Configuration

**Example**

```
awplus# configure terminal
awplus(config)# ip pim register-rp-reachability
```

**Command changes** Version 5.4.7-1.1: VRF-lite support added SBx8100.

Version 5.4.8-1.1: VRF-lite support added x930, SBx908 GEN2.

# ip pim register-source

**Overview**

Use this command to configure the source address of register packets sent by this DR, overriding the default source address, which is the address of the RPF interface toward the source host.

Use the **no** variant of this command to un-configure the source address of Register packets sent by this DR, reverting back to use the default source address that is the address of the RPF interface toward the source host.

**Syntax**

```
ip pim register-source [<source-address>|<interface>]
no ip pim register-source
```

| Parameter | Description |
|---|---|
| *<source-address>* | The IP address, entered in the form A.B.C.D, to be used as the source of the register packets. |
| *<interface>* | The name of the interface to be used as the source of the register packets. |

**Usage notes**

The configured address must be a reachable address to be used by the RP to send corresponding Register-Stop messages in response. It is normally the local loopback interface address, but can also be a physical address. This address must be advertised by unicast routing protocols on the DR. The configured interface does not have to be PIM enabled.

**Mode**

Global Configuration

**Example**

```
awplus# configure terminal
awplus(config)# ip pim register-source 10.10.1.3
```

**Command changes**

Version 5.4.7-1.1: VRF-lite support added SBx8100.

Version 5.4.8-1.1: VRF-lite support added x930, SBx908 GEN2.

# ip pim register-suppression

**Overview**

Use this command to configure the register-suppression time, in seconds, overriding the default of 60 seconds. Configuring this value modifies register-suppression time at the DR. Configuring this value at the RP modifies the RP-keepalive-period value if the ip pim rp-register-kat command is not used.

Use the **no** variant of this command to reset the value to its default of 60 seconds.

**Syntax**

```
ip pim register-suppression <1-65535>
no ip pim register-suppression
```

**Mode**

Global Configuration

**Example**

```
awplus# configure terminal
awplus(config)# ip pim register-suppression 192
```

**Command changes**

Version 5.4.7-1.1: VRF-lite support added SBx8100.

Version 5.4.8-1.1: VRF-lite support added x930, SBx908 GEN2.

# ip pim rp-address

**Overview** Use this command to statically configure the RP (Rendezvous Point) address for multicast groups.

Use the **no** variant of this command to remove a statically configured RP address for multicast groups.

**Syntax**

```
ip pim rp-address <ip-address> group-list <group-prefix>
[override]
```

```
no ip pim rp-address <ip-address> group-list <group-prefix>
[override]
```

| Parameter | Description |
|---|---|
| `<ip-address>` | IP address of RP, entered in the form `A.B.C.D`. |
| `<group-prefix>` | Multicast group IP prefix address of RP, entered in the form `A.B.C.D/M` |
| `override` | Enables statically defined RPs to override dynamically learned RPs. |

**Mode** Global Configuration

**Usage notes** The AlliedWare Plus PIM-SM implementation supports multiple static RPs. It also supports usage of static RP and the BSR (Bootstrap Router) mechanism simultaneously. The **ip pim rp-address** command is used to statically configure the RP address for multicast groups.

You need to understand the following information before using this command.

If the RP address configured by the BSR, and the statically configured RP address are both available for a group range, then the RP address configured through the BSR is chosen over the statically configured RP address, unless the 'override' parameter is specified, in which case, the static RP will be chosen.

After configuration, the RP address is inserted into a static RP group tree based on the configured group ranges. For each group range, multiple static RPs are maintained in a linked list. This list is sorted in a descending order of IP addresses. When selecting static RPs for a group range, the first element (which is the static RP with highest IP address) is chosen.

RP address deletion is handled by removing the static RP from all the existing group ranges and recalculating the RPs for existing TIB states if required.

***NOTE:*** *A unique RP address may only be specified once as a static RP.*

**Example**

```
awplus# configure terminal
```

```
awplus(config)# ip pim rp-address 192.0.2.10 group-list
233.252.0.0/24 override
```

Figure 39-2: Output from the **show ip pim sparse-mode rp mapping** command

```
awplus#show ip pim sp rp mapping
PIM Group-to-RP Mappings
Group(s): 233.252.0.0/24, Static
    RP: 192.0.2.10
         Uptime: 00:00:17
```

**Related commands**

ip pim rp-candidate

ip pim rp-register-kat

show ip pim sparse-mode rp mapping

**Command changes**

Version 5.4.7-1.1: VRF-lite support added SBx8100.

Version 5.4.8-0.5: Replaced <acl> parameter with <group-list> parameter.

Version 5.4.8-1.1: VRF-lite support added x930, SBx908 GEN2.

# ip pim rp-candidate

**Overview**

Use this command to make the router an RP (Rendezvous Point) candidate, using the IP address of the specified interface.

Use the **no** variant of this command to remove the RP status set using the **ip pim rp-candidate** command.

**Syntax**

```
ip pim rp-candidate <interface> [priority <priority> | interval <interval> ]
no ip pim rp-candidate [<interface>]
```

| Parameter | Description |
|---|---|
| *<interface>* | Interface name |
| *<priority>* | <0-255> configure priority for an RP candidate. |
| *<interval>* | advertisement interval specified in the range <1-16383> (in seconds). |

**Default**

The priority value for a candidate RP is 0 by default until specified using the **priority** parameter.

**Mode**

Global Configuration

**Usage notes**

Note that issuing the command **ip pim rp-candidate** *<interface>* without optional **priority**, **interval**, or **grouplist** parameters will configure the candidate RP with a priority value of 0.

**Examples**

To specify a priority of 3, use the following commands:

```
awplus# configure terminal
awplus(config)# ip pim rp-candidate vlan2 priority 3
```

To stop the device from being an RP candidate on vlan2 , use the following commands:

```
awplus# configure terminal
awplus(config)# no ip pim rp-candidate vlan2
```

**Related commands**

ip pim rp-address

ip pim rp-register-kat

ip pim crp-cisco-prefix

**Command changes**

Version 5.4.7-1.1: VRF-lite support added SBx8100.

Version 5.4.8-1.1: VRF-lite support added x930, SBx908 GEN2.

# ip pim rp-register-kat

**Overview** Use this command to configure the Keep Alive Time (KAT) for (S,G) states at the RP (Rendezvous Point) to monitor PIM-SM Register packets.

Use the **no** variant of this command to return the PIM-SM KAT timer to its default value of 210 seconds.

**Syntax**

```
ip pim rp-register-kat <1-65535>
no ip pim rp-register-kat
```

| Parameter | Description |
|---|---|
| *<1-65535>* | Specify the KAT timer in seconds. The default value is 210 seconds. |

**Mode** Global Configuration

**Default** The default PIM-SM KAT timer value is 210 seconds.

**Examples**

```
awplus# configure terminal
awplus(config)# ip pim rp-register-kat 3454
awplus# configure terminal
awplus(config)# no ip pim rp-register-kat
```

**Related commands** ip pim rp-address

ip pim rp-candidate

**Command changes** Version 5.4.7-1.1: VRF-lite support added SBx8100.

Version 5.4.8-1.1: VRF-lite support added x930, SBx908 GEN2.

# ip pim sparse-mode

**Overview** Use this command to enable PIM-SM on the VLAN interface.

Use the **no** variant of this command to disable PIM-SM on the VLAN interface.

**Syntax**

```
ip pim sparse-mode
no ip pim sparse-mode
```

**Mode** Interface Configuration for a VLAN interface or a PPP interface.

**Examples**

```
awplus# configure terminal
awplus(config)# interface vlan2
awplus(config-if)# ip pim sparse-mode
awplus# configure terminal
awplus(config)# interface vlan2
awplus(config-if)# no ip pim sparse-mode
awplus# configure terminal
awplus(config)# interface ppp0
awplus(config-if)# ip pim sparse-mode
awplus# configure terminal
awplus(config)# interface ppp0
awplus(config-if)# no ip pim sparse-mode
```

# ip pim sparse-mode join-prune-batching

**Overview**

Use this command to enable batching of Join and Prune messages in PIM-SM. This functionality reduces the number of PIM packets that must be sent to maintain a large number of groups

When using VRF-lite, you can use this command to enable Join and Prune batching in PIM-SM for a named VRF instance.

Use the **no** variant of this command to disable batching of Join and Prune messages in PIM-SM.

**Syntax**

```
ip pim sparse-mode join-prune-batching
no ip pim sparse-mode join-prune-batching
```

**Syntax (VRF-lite)**

```
ip pim [vrf <vrf-name>]sparse-mode join-prune-batching
no ip pim [vrf <vrf-name>]sparse-mode join-prune-batching
```

| Parameter | Description |
|---|---|
| `vrf` | Apply this command to a VRF instance. |
| `<vrf-name>` | The name of the VRF instance. |

**Default**

Disabled.

**Mode**

Global Configuration

**Examples**

To enable Join/Prune batching for PIM-SM, use the commands:

```
awplus# configure terminal
awplus(config)# ip pim sparse-mode join-prune-batching
```

To disable Join/Prune batching for PIM-SM, use the commands:

```
awplus# configure terminal
awplus(config)# no ip pim sparse-mode join-prune-batching
```

**Example (VRF-lite)**

To enable Join/Prune batching for the VRF instance 'red', use the commands:

```
awplus# configure terminal
awplus(config)# ip pim vrf red sparse-mode join-prune-batching
```

To disable Join/Prune batching for the VRF instance 'red', use the commands:

```
awplus# configure terminal
awplus(config)# no ip pim vrf red sparse-mode
join-prune-batching
```

**Related commands**

ip pim sparse-mode wrong-vif-suppression

**Command changes** Version 5.4.8-2.3: command added.

# ip pim sparse-mode passive

**Overview** Use this command to enable and disable passive mode operation for local members on the VLAN interface.

Use the **no** variant of this command to disable passive mode operation for local members on the VLAN interface.

**Syntax**

```
ip pim sparse-mode passive
no ip pim sparse-mode passive
```

**Mode** Interface Configuration for a VLAN interface or a PPP interface.

**Usage** Passive mode essentially stops PIM transactions on the interface, allowing only IGMP mechanism to be active. To turn off passive mode, use the **no ip pim sparse-mode passive** or the ip pim sparse-mode command. To turn off PIM activities on the VLAN interface, use the **no ip pim sparse-mode** command.

**Examples**

```
awplus# configure terminal
awplus(config)# interface vlan2
awplus(config-if)# ip pim sparse-mode passive
awplus# configure terminal
awplus(config)# interface vlan2
awplus(config-if)# no ip pim sparse-mode passive
awplus# configure terminal
awplus(config)# interface ppp0
awplus(config-if)# ip pim sparse-mode passive
awplus# configure terminal
awplus(config)# interface ppp0
awplus(config-if)# no ip pim sparse-mode passive
```

# ip pim sparse-mode wrong-vif-suppression

**Overview** Use this command to permit or block multicast packets that arrive on the wrong VLAN Interface (VIF).

When using VRF-lite, you can use this command to enable wrong VIF suppression for a named VRF instance.

Use the **no** variant of this command to disable wrong VIF suppression.

**Syntax**

```
ip pim sparse-mode wrong-vif-suppression
no ip pim sparse-mode wrong-vif-suppression
```

**Syntax (VRF-lite)**

```
ip pim [vrf <vrf-name>]sparse-mode wrong-vif-suppression
no ip pim [vrf <vrf-name>]sparse-mode wrong-vif-suppression
```

| Parameter | Description |
|---|---|
| `vrf` | Apply this command to a VRF instance. |
| `<vrf-name>` | The name of the VRF instance. |

**Default** Disabled.

**Mode** Global Configuration

**Usage notes** This command enables wrong VIF suppression for PIM sparse-mode. Wrong VIF suppression prevents multicast packets received on the wrong upstream interface from being copied to the CPU.

**Examples** To enable wrong VIF suppression, use the commands:

```
awplus# configure terminal
awplus(config)# ip pim sparse-mode wrong-vif-suppression
```

To disable wrong VIF suppression, use the commands:

```
awplus# configure terminal
awplus(config)# no ip pim sparse-mode wrong-vif-suppression
```

**Example (VRF-lite)** To enable wrong VIF suppression for the VRF instance 'green', use the commands:

```
awplus# configure terminal
awplus(config)# ip pim vrf green sparse-mode
wrong-vif-suppression
```

To disable wrong VIF suppression for the VRF instance 'green', use the commands:

```
awplus# configure terminal
awplus(config)# no ip pim vrf green sparse-mode
wrong-vif-suppression
```

**Related commands** ip pim sparse-mode join-prune-batching

**Command changes** Version 5.4.8-2.3: command added.

# ip pim spt-threshold

**Overview**

This command turns on the ability for the last-hop PIM router to switch to SPT (shortest-path tree).

The **no** variant of this command turns off the ability for the last-hop PIM router to switch to SPT.

***NOTE:*** *The switching to SPT happens either at the receiving of the first data packet, or not at all; it is not rate-based.*

**Syntax**

```
ip pim spt-threshold
no ip pim spt-threshold
```

**Mode**

Global Configuration

**Examples**

To enable the last-hop PIM-SM router to switch to SPT, use the following commands:

```
awplus# configure terminal
awplus(config)# ip pim spt-threshold
```

To stop the last-hop PIM-SM router from being able to switch to SPT, use the following commands:

```
awplus# configure terminal
awplus(config)# no ip pim spt-threshold
```

**Command changes**

Version 5.4.7-1.1: VRF-lite support added SBx8100.

Version 5.4.8-1.1: VRF-lite support added x930, SBx908 GEN2.

# ip pim ssm

**Overview** Use this command to define the Source Specific Multicast (SSM) range of IP multicast addresses. The default keyword defines the SSM range as 232/8.

Use the **no** variant of this command to disable the SSM range.

**Syntax**

```
ip pim ssm default
no ip pim ssm
```

**Default** By default, the command is disabled.

**Mode** Global Configuration

**Usage** When an SSM range of IP multicast addresses is defined by the ip pim ssm command, the no (*,G) or (S,G,rpt) state will be initiated for groups in the SSM range.

The messages corresponding to these states will not be accepted or originated in the SSM range.

**Examples** The following commands show how to set PIM-SSM as default:

```
awplus# configure terminal
awplus(config)# ip pim ssm default
```

The following commands show how to disable PIM-SSM:

```
awplus# configure terminal
awplus(config)# no ip pim ssm
```

# service pim

**Overview** Use this command to enable PIM sparse mode services.

Use the **no** version of the command to disable unused PIM sparse mode services.

**Syntax**

```
service pim
no service pim
```

**Default** Enabled

**Mode** Global Configuration

**Usage notes** Sometimes it may be desirable to disable unused services, in order to reduce memory use.

Disabling the PIM services will only take effect after you save the configuration and restart the device.

**Example** To disable the PIM sparse mode service, use the commands:

```
awplus# configure terminal
awplus(config)# no service pim
```

**Output** Figure 39-3: Example output from **no service pim**

```
awplus(config)#no service pim
% Save the config and restart the device for this change to take
effect
```

**Command changes** Version 5.5.0-0.1: command added

# show debugging pim sparse-mode

**Overview**

This command displays the status of the debugging of the system.

For information on filtering and saving command output, see the "Getting Started with AlliedWare Plus" Feature Overview and Configuration Guide.

**Syntax**

```
show debugging pim sparse-mode
```

**Mode**

User Exec and Privileged Exec

**Example**

To display PIM-SM debugging settings, use the command:

```
awplus# show debugging pim sparse-mode
```

Figure 39-4: Output from **show debugging pim sparse-mode**

```
Debugging status:
  PIM event debugging is on
  PIM Hello THT timer debugging is on
  PIM event debugging is on
  PIM MFC debugging is on
  PIM state debugging is on
  PIM packet debugging is on
  PIM incoming packet debugging is on
  PIM outgoing packet debugging is on
```

**Related commands**

debug pim sparse-mode

**Command changes**

Version 5.4.7-1.1: VRF-lite support added SBx8100.

Version 5.4.8-1.1: VRF-lite support added x930, SBx908 GEN2.

# show ip pim sparse-mode bsr-router

**Overview** Use this command to show the Bootstrap Router (BSR) (v2) address.

For information on filtering and saving command output, see the "Getting Started with AlliedWare Plus" Feature Overview and Configuration Guide.

**Syntax**

```
show ip pim sparse-mode bsr-router
```

**Mode** User Exec and Privileged Exec

**Output** Figure 39-5: Output from the **show ip pim sparse-mode bsr-router** command

```
PIMv2 Bootstrap information
  BSR address: 10.10.11.35 (?)
  Uptime:      00:00:38, BSR Priority: 0, Hash mask length: 10
  Expires:     00:01:32
  Role: Non-candidate BSR
  State: Accept Preferred
```

**Related commands**

show ip pim sparse-mode rp mapping

show ip pim sparse-mode neighbor

**Command changes**

Version 5.4.7-1.1: VRF-lite support added SBx8100.

Version 5.4.8-1.1: VRF-lite support added x930, SBx908 GEN2.

# show ip pim sparse-mode interface

**Overview** Use this command to show PIM-SM interface information.

For information on filtering and saving command output, see the "Getting Started with AlliedWare Plus" Feature Overview and Configuration Guide

**Syntax** `show ip pim sparse-mode interface`

**Mode** User Exec and Privileged Exec

**Example** To display information about PIM-SM interfaces, use the command:

```
awplus# show ip pim sparse-mode interface
```

**Output** Figure 39-6: Example output from **show ip pim sparse-mode interface**

```
Total configured interfaces: 16   Maximum allowed: 31
Total active interfaces:     12

Address         Interface VIFindex Ver/   Nbr    DR          DR
                                   Mode   Count  Prior
192.168.1.53    vlan2     0        v2/S   2      2       192.168.1.53
192.168.10.53   vlan3     2        v2/S   0      2       192.168.10.53

... Note that this screen has been edited to remove any additional interfaces.
```

**Table 1:** Parameters in the output from the **show ip pim sparse-mode interface** command

| Parameters | Description |
|---|---|
| `Total configured interfaces` | The number of configured PIM Sparse Mode interfaces. |
| `Maximum allowed` | The maximum number of PIM Sparse Mode interfaces that can be configured. |
| `Total active interfaces` | The number of active PIM Sparse Mode interfaces. |
| `Address` | Primary PIM-SM address. |
| `Interface` | Name of the PIM-SM interface. |
| `VIF Index` | The Virtual Interface index of the VLAN. |
| `Ver/Mode` | PIM version/Sparse mode. |
| `Nbr Count` | Neighbor count of the PIM-SM interface. |

**Table 1:** Parameters in the output from the **show ip pim sparse-mode interface** command (cont.)

| Parameters | Description |
|---|---|
| `DR Priority` | Designated Router priority. |
| DR | The IP address of the Designated Router. |

**Related commands**

ip pim sparse-mode

show ip pim sparse-mode rp mapping

show ip pim sparse-mode neighbor

**Command changes**

Version 5.4.7-1.1: VRF-lite support added SBx8100.

Version 5.4.8-1.1: VRF-lite support added x930, SBx908 GEN2.

# show ip pim sparse-mode interface detail

**Overview** Use this command to show detailed information on a PIM-SM interface.

For information on filtering and saving command output, see the "Getting Started with AlliedWare Plus" Feature Overview and Configuration Guide.

**Syntax** `show ip pim sparse-mode interface detail`

**Mode** User Exec and Privileged Exec

**Output** Figure 39-7: Example output from the **show ip pim sparse-mode interface detail** command

```
vlan3 (vif 3):
  Address 192.168.1.149, DR 192.168.1.149
  Hello period 30 seconds, Next Hello in 15 seconds
  Triggered Hello period 5 seconds
  Neighbors:
   192.168.1.22

vlan2 (vif 0):
  Address 10.10.11.149, DR 10.10.11.149
  Hello period 30 seconds, Next Hello in 18 seconds
  Triggered Hello period 5 seconds
  Neighbors:
   10.10.11.4
```

**Command changes** Version 5.4.7-1.1: VRF-lite support added SBx8100.

Version 5.4.8-1.1: VRF-lite support added x930, SBx908 GEN2.

# show ip pim sparse-mode local-members

**Overview** Use this command to show detailed local member information on a VLAN interface configured for PIM-SM. If you do not specify a VLAN interface then detailed local member information is shown for all VLAN interfaces configured for PIM-SM.

For information on filtering and saving command output, see the "Getting Started with AlliedWare Plus" Feature Overview and Configuration Guide.

**Syntax**

```
show ip pim sparse-mode local-members [<interface>]
```

| Parameter | Description |
|---|---|
| *<interface>* | Optional. Specify the interface. For instance, VLAN interface `vlan2`. |

**Mode** User Exec and Privileged Exec

**Example** To show detailed PIM-SM information for all PIM-SM configured VLAN interfaces, use the command:

```
awplus# show ip pim sparse-mode local-members
```

**Output** Figure 39-8: Example output from the **show ip pim sparse-mode local-members** command

```
awplus#show ip pim sparse-mode local-members
PIM Local membership information

vlan1:
    (*, 224.0.0.4) : Include

vlan203:
    (*, 223.0.0.3) : Include
```

**Example** To show detailed PIM-SM information for the PIM-SM configured interface vlan1, use the command:

```
awplus# show ip pim sparse-mode local-members vlan1
```

**Output** Figure 39-9: Example output from the **show ip pim sparse-mode local-members vlan1** command

```
awplus#show ip pim sparse-mode local-members vlan1
PIM Local membership information

vlan1:
    (*, 224.0.0.4) : Include
```

**Command changes** Version 5.4.7-1.1: VRF-lite support added SBx8100.

Version 5.4.8-1.1: VRF-lite support added x930, SBx908 GEN2.

# show ip pim sparse-mode mroute

**Overview** Use this command to display the IP multicast routing table or the IP multicast routing table based on a specific address or addresses.

**Syntax**

```
show ip pim sparse-mode mroute brief
show ip pim sparse-mode mroute
show ip pim sparse-mode mroute <group-address>
show ip pim sparse-mode mroute <source-address>
show ip pim sparse-mode mroute <source-address> <group-address>
```

| Parameter | Description |
|---|---|
| `brief` | Shows only a summary of the number of each type of multicast entry and the cache. |
| `<group-address>` | Group IP address, entered in the form A.B.C.D. Output is all multicast entries belonging to that group. |
| `<source-address>` | Source IP address, entered in the form A.B.C.D. Output is all multicast entries belonging to that source. |

**Mode** Privileged Exec

**Usage notes** Note that when a feature license is enabled, the output for the **show ip pim sparse-mode mroute** command will only show 32 interfaces because of the terminal display width limit. Use the **show ip pim sparse-mode mroute detail** command to display detailed entries of the IP multicast routing table.

**Example** To display the IP multicast routing table for the address 40.40.40.11, enter the command:

```
awplus# show ip pim sparse-mode mroute 40.40.40.11
```

**Output** Figure 39-10: Example output from **show ip pim sparse-mode mroute brief**

```
awplus#show ip pim sparse-mode mroute brief
IP Multicast Routing Table

(*,*,RP) Entries: 0
(*,G) Entries: 0
(S,G) Entries: 99
(S,G,rpt) Entries: 99
FCR Entries: 0
MRIB Msg Cache Hit: 0
```

**Output** Figure 39-11: Example output from **show ip pim sparse-mode mroute**

```
awplus#show ip pim sparse-mode mroute
IP Multicast Routing Table

(*,*,RP) Entries: 0
(*,G) Entries: 0
(S,G) Entries: 99
(S,G,rpt) Entries: 99
FCR Entries: 0
MRIB Msg Cache Hit: 0

(10.200.0.2, 224.1.1.1)
RPF nbr: 0.0.0.0
RPF idx: None
SPT bit: 1
Upstream State: JOINED
 Local            1
 Joined           0
 Asserted Winner  0
 Asserted Loser   0
 Outgoing         1
  Interop    listener    rx-data     flags (ES,EDW,RXD,DAJ,EOE)
             0x00000000  0x00000000  0x00000001
(10.200.0.2, 224.1.1.1, rpt)
RP: 0.0.0.0
RPF nbr: 0.0.0.0
RPF idx: None
Upstream State: RPT NOT JOINED
 Local     0
 Pruned    0
 Outgoing  0
  Interop    listener    rx-data     flags (ES,EDW,RXD,DAJ,EOE)
             0x00000000  0x00000000  0x00000001
...
```

**Related commands** show ip pim sparse-mode mroute detail

**Command changes** Version 5.4.7-1.1: VRF-lite support added to SBx8100.

Version 5.4.8-1.1: VRF-lite support added to x930, SBx908 GEN2.

Version 5.4.8-2.1: **brief** parameter added.

# show ip pim sparse-mode mroute detail

**Overview** This command displays detailed entries of the IP multicast routing table, or detailed entries of the IP multicast routing table based on the specified address or addresses.

For information on filtering and saving command output, see the "Getting Started with AlliedWare Plus" Feature Overview and Configuration Guide.

**Syntax**

```
show ip pim sparse-mode mroute [<group-address>] detail
show ip pim sparse-mode mroute [<source-address>] detail
show ip pim sparse-mode mroute [<group-address>
<source-address>] detail
show ip pim sparse-mode mroute [<source-address>
<group-address>] detail
```

| Parameter | Description |
|---|---|
| *<group-address>* | Group IP address, entered in the form A.B.C.D. Output is all multicast entries belonging to that group. |
| *<source-address>* | Source IP address, entered in the form A.B.C.D. Output is all multicast entries belonging to that source. |
| `detail` | Show detailed information. |

**Usage notes** Based on the group and source address, the output is the selected route if present in the multicast route tree.

**Mode** User Exec and Privileged Exec

**Examples**

```
awplus# show ip pim sparse-mode mroute detail
awplus# show ip pim sparse-mode mroute 40.40.40.11 detail
awplus# show ip pim sparse-mode mroute 224.1.1.1 detail
awplus# show ip pim sparse-mode mroute 224.1.1.1 40.40.40.11
detail
```

Figure 39-12: Example output from the **show ip pim sparse-mode mroute detail** command

```
IP Multicast Routing Table

(*,*,RP) Entries: 0
(*,G) Entries: 4
(S,G) Entries: 0
(S,G,rpt) Entries: 0
FCR Entries: 0

(*, 224.0.1.24) Uptime: 00:06:42
  RP: 0.0.0.0, RPF nbr: None, RPF idx: None
  Upstream:
   State: JOINED, SPT Switch: Disabled, JT: off
   Macro state: Join Desired,
  Downstream:
   vlan2:
     State: NO INFO, ET: off, PPT: off
     Assert State: NO INFO, AT: off
      Winner: 0.0.0.0, Metric: 4294967295l, Pref: 4294967295l,
RPT bit: on
     Macro state: Could Assert, Assert Track
  Local Olist:
   vlan2
```

**Command changes**

Version 5.4.7-1.1: VRF-lite support added SBx8100.

Version 5.4.8-1.1: VRF-lite support added x930, SBx908 GEN2.

# show ip pim sparse-mode neighbor

**Overview** Use this command to show the PIM-SM neighbor information.

For information on filtering and saving command output, see the "Getting Started with AlliedWare Plus" Feature Overview and Configuration Guide.

**Syntax**

```
show ip pim sparse-mode neighbor [<interface>] [<ip-address>]
[detail]
```

| Parameter | Description |
|---|---|
| *<interface>* | Interface name (e.g. `vlan2`). Show neighbors on an interface. |
| *<ip-address>* | Show neighbors with a particular address on an interface. The IP address entered in the form A.B.C.D. |
| `detail` | Show detailed information. |

**Mode** Privileged Exec

**Examples**

```
awplus# show ip pim sparse-mode neighbor
awplus# show ip pim sparse-mode neighbor vlan5 detail
```

Figure 39-13: Example output from the **show ip pim sparse-mode neighbor** command

```
Neighbor        Interface   Uptime/Expires    Ver   DR
Address                                             Priority/
Mode
10.10.0.9       vlan2       00:55:33/00:01:44 v2    1 /
10.10.0.136     vlan2       00:55:20/00:01:25 v2    1 /
10.10.0.172     vlan2       00:55:33/00:01:32 v2    1 / DR
192.168.0.100   vlan3       00:55:30/00:01:20 v2    N / DR
```

Figure 39-14: Example output from the **show ip pim sparse-mode neighbor interface detail** command

```
Nbr 10.10.3.180 (vlan5), DR
 Expires in 55 seconds, uptime 00:00:15
 Holdtime: 70 secs, T-bit: off, Lan delay: 1, Override interval:
3
 DR priority: 100, Gen ID: 625159467,
 Secondary addresses:
  192.168.30.1
```

**Command changes** Version 5.4.7-1.1: VRF-lite support added SBx8100.

Version 5.4.8-1.1: VRF-lite support added x930, SBx908 GEN2.

# show ip pim sparse-mode nexthop

**Overview** Use this command to see the next hop information as used by PIM-SM.

For information on filtering and saving command output, see the "Getting Started with AlliedWare Plus" Feature Overview and Configuration Guide

**Syntax** `show ip pim sparse-mode nexthop`

**Mode** User Exec and Privileged Exec

**Example** `awplus# show ip pim sparse-mode nexthop`

Figure 39-15: Example output from the **show ip pim sparse-mode nexthop** command

```
Flags: N = New, R = RP, S = Source, U = Unreachable
Destination Type Nexthop Nexthop Nexthop      Nexthop    Metric Pref  Refcnt
                 Num     Addr                 Ifindex    Name
_____________________________________________________________________________
10.10.0.9   .RS.  1      0.0.0.0  4           0           0        1
```

**Table 2:** Parameters in output of the **show ip pim sparse-mode nexthop** command

| Parameter | Description |
|---|---|
| `Destination` | The destination address for which PIM-SM requires next hop information. |
| `Type` | The type of destination, as indicated by the Flags description. N = New, R= RP, S = Source, U = Unreachable. |
| `Nexthop Num` | The number of next hops to the destination. PIM-SM always uses only 1 next hop. |
| `Nexthop Addr` | The address of the primary next hop gateway. |
| `Nexthop IfIndex` | The interface on which the next hop gateway can be reached. |
| `Nexthop Name` | The name of next hop interface. |
| `Metric` | The metric of the route towards the destination. |
| `Preference` | The preference of the route towards destination. |
| `Refcnt` | Only used for debugging. |

**Command changes** Version 5.4.7-1.1: VRF-lite support added SBx8100.

Version 5.4.8-1.1: VRF-lite support added x930, SBx908 GEN2.

# show ip pim sparse-mode packet statistics

**Overview** Use this command to display the current packet receive counts for PIM sparse-mode.

**Syntax**

```
show ip pim sparse-mode packet statistics
```

**Mode** Privileged Exec

**Example** The following command displays the current packet receive counts for PIM sparse-mode:

```
awplus# configure terminal
awplus(config)# show ip pim sparse-mode statistics
```

**Output** Figure 39-16: Example output from **show ip pim sparse-mode statistics**

```
awplus(config)#show ip pim sparse-mode statistics
PIM-SM Receive Packet Statistics :
All PIM-SM    :   Total : 25   Valid : 25
Hello         :   Total : 14   Valid : 14
Register      :   Total : 5   Valid : 5
Register Stop :   Total : 0   Valid : 0
Join/Prune    :   Total : 0   Valid : 0
Bootstrap     :   Total : 6   Valid : 6
Assert        :   Total : 0   Valid : 0
Candidate-RP  :   Total : 0   Valid : 0
```

**Related commands** clear ip pim sparse-mode packet statistics

**Command changes** Version 5.4.7-1.1: VRF-lite support added SBx8100.

Version 5.4.8-1.1: VRF-lite support added x930, SBx908 GEN2.

# show ip pim sparse-mode rp-hash

**Overview**

Use this command to display the Rendezvous Point (RP) to be chosen based on the group selected.

For information on filtering and saving command output, see the "Getting Started with AlliedWare Plus" Feature Overview and Configuration Guide.

**Syntax**

```
show ip pim sparse-mode rp-hash <group-addr>
```

| Parameter | Description |
|---|---|
| *<group-addr>* | The group address for which to find the RP, entered in the form A.B.C.D. |

**Mode**

User Exec and Privileged Exec

**Example**

```
awplus# show ip pim sparse-mode rp-hash 224.0.1.3
```

Figure 39-17: Output from the **show ip pim sparse-mode rp-hash** command

```
RP: 10.10.11.35
Info source: 10.10.11.35, via bootstrap
```

**Related commands**

show ip pim sparse-mode rp mapping

**Command changes**

Version 5.4.7-1.1: VRF-lite support added SBx8100.

Version 5.4.8-1.1: VRF-lite support added x930, SBx908 GEN2.

# show ip pim sparse-mode rp mapping

**Overview**

Use this command to show group-to-RP (Rendezvous Point) mappings, and the RP set.

For information on filtering and saving command output, see the "Getting Started with AlliedWare Plus" Feature Overview and Configuration Guide.

**Syntax**

```
show ip pim sparse-mode rp mapping
```

**Mode**

Privileged Exec

**Example**

```
awplus# show ip pim sparse-mode rp mapping
```

Figure 39-18: Output from the **show ip pim sparse-mode rp mapping** command

```
PIM Group-to-RP Mappings
Group(s): 224.0.0.0/4
  RP: 10.10.0.9
    Info source: 10.10.0.9, via bootstrap, priority 192
         Uptime: 16:52:39, expires: 00:02:50
```

**Related commands**

show ip pim sparse-mode rp-hash

**Command changes**

Version 5.4.7-1.1: VRF-lite support added SBx8100.

Version 5.4.8-1.1: VRF-lite support added x930, SBx908 GEN2.

# undebug all pim sparse-mode

**Overview** Use this command to disable all PIM-SM debugging.

**Syntax**

```
undebug all pim sparse-mode
```

**Mode** Privileged Exec

**Example**

```
awplus# undebug all pim sparse-mode
```

**Related commands** debug pim sparse-mode

**Command changes** Version 5.4.7-1.1: VRF-lite support added SBx8100.

Version 5.4.8-1.1: VRF-lite support added x930, SBx908 GEN2.

# 40 PIM-SMv6 Commands

## Introduction

**Overview**

This chapter provides an alphabetical reference of PIM-SMv6 commands. For IPv6 Multicast commands, see Multicast Commands. For an overview of PIM-SMv6, see the PIM-SMv6 Feature Overview and Configuration Guide.

IPv6 must be enabled on an interface with the ipv6 enable command, IPv6 forwarding must be enabled globally for routing IPv6 with the ipv6 forwarding command, and IPv6 multicasting must be enabled globally with the ipv6 multicast-routing command before using PIM-SMv6 commands.

Static IPv6 multicast routes take priority over dynamic IPv6 multicast routes. Use the clear ipv6 mroute command to clear static IPv6 multicast routes and ensure dynamic IPv6 multicast routes can take over from previous IPv6 static multicast routes.

***NOTE:*** *The IPv6 Multicast addresses shown can be derived from IPv6 unicast prefixes as per RFC 3306.The IPv6 unicast prefix reserved for documentation is 2001:0db8::/32 as per RFC 3849. Using the base /32 prefix the IPv6 multicast prefix for 2001:0db8::/32 is ff3x:20:2001:0db8::/64. Where an RP address is 2001:0db8::1 the embedded RP multicast prefix is ff7x:120:2001:0db8::/96. For ASM (Any-Source Multicast) the IPV6 multicast addresses allocated for documentation purposes are ff0x::0db8:0:0/96 as per RFC 6676. This is a /96 prefix so that it can be used with group IDs as per RFC 3307. These addresses should not be used for practical networks (other than for testing purposes), nor should they appear in any public network.*

*The IPv6 addresses shown use the address space 2001:0db8::/32, defined in RFC 3849 for documentation purposes. These addresses should not be used for practical networks (other than for testing purposes) nor should they appear on any public network.*

**Command List**


- "clear ipv6 mroute pim" on page 1923
- "clear ipv6 mroute pim sparse-mode" on page 1924
- "clear ipv6 pim sparse-mode bsr rp-set *" on page 1925
- "debug ipv6 pim sparse-mode" on page 1926

- "debug ipv6 pim sparse-mode packet" on page 1928
- "debug ipv6 pim sparse-mode timer" on page 1929
- "ipv6 pim anycast-rp" on page 1931
- "ipv6 pim bsr-border" on page 1933
- "ipv6 pim bsr-candidate" on page 1935
- "ipv6 pim cisco-register-checksum" on page 1937
- "ipv6 pim crp-cisco-prefix" on page 1938
- "ipv6 pim dr-priority" on page 1939
- "ipv6 pim exclude-genid" on page 1941
- "ipv6 pim ext-srcs-directly-connected" on page 1942
- "ipv6 pim hello-holdtime" on page 1943
- "ipv6 pim hello-interval" on page 1944
- "ipv6 pim ignore-rp-set-priority" on page 1945
- "ipv6 pim jp-timer" on page 1946
- "ipv6 pim neighbor-filter" on page 1947
- "ipv6 pim register-rate-limit" on page 1948
- "ipv6 pim register-rp-reachability" on page 1949
- "ipv6 pim register-source" on page 1950
- "ipv6 pim register-suppression" on page 1951
- "ipv6 pim rp-address" on page 1952
- "ipv6 pim rp-candidate" on page 1954
- "ipv6 pim rp embedded" on page 1955
- "ipv6 pim rp-register-kat" on page 1956
- "ipv6 pim sparse-mode" on page 1957
- "ipv6 pim sparse-mode passive" on page 1958
- "ipv6 pim spt-threshold" on page 1959
- "ipv6 pim ssm" on page 1960
- "ipv6 pim unicast-bsm" on page 1961
- "service pim6" on page 1962
- "show debugging ipv6 pim sparse-mode" on page 1963
- "show ipv6 pim sparse-mode bsr-router" on page 1964
- "show ipv6 pim sparse-mode interface" on page 1965
- "show ipv6 pim sparse-mode interface detail" on page 1967
- "show ipv6 pim sparse-mode local-members" on page 1968
- "show ipv6 pim sparse-mode mroute" on page 1970

- "show ipv6 pim sparse-mode mroute detail" on page 1972
- "show ipv6 pim sparse-mode neighbor" on page 1974
- "show ipv6 pim sparse-mode nexthop" on page 1975
- "show ipv6 pim sparse-mode rp-hash" on page 1976
- "show ipv6 pim sparse-mode rp mapping" on page 1977
- "show ipv6 pim sparse-mode rp nexthop" on page 1978
- "undebug all ipv6 pim sparse-mode" on page 1980
- "undebug ipv6 pim sparse-mode" on page 1981

# clear ipv6 mroute pim

**Overview** Use this command to clear all Multicast Forwarding Cache (MFC) entries in PIM-SMv6.

***NOTE:*** *Static IPv6 multicast routes take priority over dynamic IPv6 multicast routes. Use the clear ipv6 mroute command to clear static IPv6 multicast routes and ensure dynamic IPv6 multicast routes can take over from previous static IPv6 multicast routes.*

**Syntax**

```
clear ipv6 mroute [*] pim sparse-mode
```

| Parameter | Description |
|---|---|
| * | Clears all PIM-SMv6 multicast routes. Using this command without this optional operator only deletes the multicast router table entries. |

**Mode** Privileged Exec

**Example**

```
awplus# clear ipv6 mroute pim sparse-mode
awplus# clear ipv6 mroute * pim sparse-mode
```

# clear ipv6 mroute pim sparse-mode

**Overview** Use this command to clear all multicast route table entries learned through PIM-SMv6 for a specified multicast group address, and optionally a specified multicast source address.

***NOTE:*** *Static IPv6 multicast routes take priority over dynamic IPv6 multicast routes. Use the clear ipv6 mroute command to clear static IPv6 multicast routes and ensure dynamic IPv6 multicast routes can take over from previous static IPv6 multicast routes.*

**Syntax**

```
clear ipv6 mroute <Group-IPv6-add> pim sparse-mode
clear ipv6 mroute <Group-IPv6-add> <Source-IPv6-add> pim
sparse-mode
```

| Parameter | Description |
|---|---|
| *<Group-IPv6-add>* | Specify a multicast group IPv6 address, entered in the form X:X::X:X. |
| *<Source-IPv6-add>* | Specify a source group IPv6 address, entered in the form X:X::X:X. |

**Mode** Privileged Exec

**Example**

```
awplus# clear ipv6 mroute 2001:db8:: pim sparse-mode
awplus# clear ipv6 mroute 2001:db8:: 2002:db8:: pim sparse-mode
```

# clear ipv6 pim sparse-mode bsr rp-set *

**Overview** Use this command to clear all Rendezvous Point (RP) sets learned through the PIM-SMv6 Bootstrap Router (BSR).

***NOTE:*** *Static IPv6 multicast routes take priority over dynamic IPv6 multicast routes. Use the clear ipv6 mroute command to clear static IPv6 multicast routes and ensure dynamic IPv6 multicast routes can take over from previous static IPv6 multicast routes.*

**Syntax**

```
clear ipv6 pim sparse-mode bsr rp-set *
```

| Parameter | Description |
|---|---|
| * | Clears all RP sets. |

**Mode** Privileged Exec

**Usage** For multicast clients, note that one router will be automatically or statically designated as the RP, and all routers must explicitly join through the RP. A Designated Router (DR) sends periodic Join/Prune messages toward a group-specific RP for each group that it has active members.

For multicast sources, note that the Designated Router (DR) unicasts Register messages to the RP encapsulating the data packets from the multicast source. The RP forwards decapsulated data packets toward group members.

**Example**

```
awplus# clear ipv6 pim sparse-mode bsr rp-set *
```

# debug ipv6 pim sparse-mode

**Overview** Use this command to activate PIM-SMv6 debugging.

Use the no variant of this command to deactivate PIMv6 debugging. Note that the undebug ipv6 pim sparse-mode command is an alias of the no variant of this command.

**Syntax**

```
debug ipv6 pim sparse-mode [all] [events] [mfc] [mib] [nexthop]
[nsm] [state] [timer]
```

```
no debug ipv6 pim sparse-mode [all] [events] [mfc] [mib]
[nexthop] [nsm] [state] [timer]
```

| Parameter | Description |
|---|---|
| all | Activates/deactivates all PIM-SMv6 debugging. |
| events | Activates debug printing of PIM-SMv6 events. |
| mfc | Activates debug printing of MFC (Multicast Forwarding Cache). |
| mib | Activates debug printing of PIM-SMv6 MIBs. |
| nexthop | Activates debug printing of PIM-SMv6 next hop communications. |
| nsm | Activates debugging of PIM-SMv6 NSM (Network Services Module) communications. |
| state | Activates debug printing of state transition on all PIM-SMv6 FSMs. |
| timer | Activates debug printing of PIM-SMv6 timers. |

**Mode** Privileged Exec and Global Configuration

**Example**

```
awplus# configure terminal
awplus(config)# terminal monitor
awplus(config)# debug ipv6 pim sparse-mode all
awplus# configure terminal
awplus(config)# terminal monitor
awplus(config)# debug ipv6 pim sparse-mode events
awplus# configure terminal
awplus(config)# terminal monitor
awplus(config)# debug ipv6 pim sparse-mode nexthop
```

**Validation output**

Figure 40-1: Example output from the **show debugging ipv6 pim sparse-mode** command after issuing **multiple debug ipv6 pim sparse-mode** commands

```
awplus#debug ipv6 pim sparse-mode state
awplus#debug ipv6 pim sparse-mode events
awplus#debug ipv6 pim sparse-mode packet
awplus#show debugging ipv6 pim sparse-mode
PIM-SMv6 debugging status:
  PIM event debugging is on
  PIM MFC debugging is off
  PIM state debugging is on
  PIM packet debugging is on
  PIM Hello HT timer debugging is off
  PIM Hello NLT timer debugging is off
  PIM Hello THT timer debugging is off
  PIM Join/Prune JT timer debugging is off
  PIM Join/Prune ET timer debugging is off
  PIM Join/Prune PPT timer debugging is off
  PIM Join/Prune KAT timer debugging is off
  PIM Join/Prune OT timer debugging is off
  PIM Assert AT timer debugging is off
  PIM Register RST timer debugging is off
  PIM Bootstrap BST timer debugging is off
  PIM Bootstrap CRP timer debugging is off
  PIM mib debugging is off
  PIM nsm debugging is off
  PIM nexthop debugging is off
```

**Related commands**

show debugging ipv6 pim sparse-mode

undebug all ipv6 pim sparse-mode

undebug ipv6 pim sparse-mode

# debug ipv6 pim sparse-mode packet

**Overview** Use this command to activate PIM-SMv6 packet debugging.

Use the no variant of this command to deactivate PIMv6 packet debugging.

**Syntax**

```
debug ipv6 pim sparse-mode packet {in|out}
no debug ipv6 pim sparse-mode packet {in|out}
```

| Parameter | Description |
|---|---|
| packet | Activates debug printing of incoming and/or outgoing IPv6 packets. |
| in | Specify incoming packet debugging. |
| out | Specify outgoing packet debugging. |

**Mode** Privileged Exec and Global Configuration

**Example**

```
awplus# configure terminal
awplus(config)# terminal monitor
awplus(config)# debug ipv6 pim sparse-mode packet in
awplus# configure terminal
awplus(config)# terminal monitor
awplus(config)# debug ipv6 pim sparse-mode packet out
awplus# configure terminal
awplus(config)# terminal monitor
awplus(config)# no debug ipv6 pim sparse-mode packet in
awplus# configure terminal
awplus(config)# terminal monitor
awplus(config)# no debug ipv6 pim sparse-mode packet out
```

**Related commands**

show debugging ipv6 pim sparse-mode

undebug all ipv6 pim sparse-mode

# debug ipv6 pim sparse-mode timer

**Overview** Use this command to enable debugging for the specified PIM-SMv6 timers.

Use the **no** variants of this command to disable debugging for the specified PIM-SMv6 timers.

**Syntax**

```
debug ipv6 pim sparse-mode timer assert [at]
no debug ipv6 pim sparse-mode timer assert [at]
debug pim ipv6 sparse-mode timer bsr [bst|crp]
no debug pim ipv6 sparse-mode timer bsr [bst|crp]
debug pim ipv6 sparse-mode timer hello [ht|nlt|tht]
no debug pim ipv6 sparse-mode timer hello [ht|nlt|tht]
debug pim ipv6 sparse-mode timer joinprune [jt|et|ppt|kat|ot]
no debug pim ipv6 sparse-mode timer joinprune
[jt|et|ppt|kat|ot]
debug pim ipv6 sparse-mode timer register [rst]
no debug pim ipv6 sparse-mode timer register [rst]
```

| Parameter | Description |
|---|---|
| assert | Enable or disable debugging for the Assert timers. |
| at | Enable or disable debugging for the Assert Timer. |
| bsr | Enable or disable debugging for the specified Bootstrap Router timer, or all Bootstrap Router timers. |
| bst | Enable or disable debugging for the Bootstrap Router: Bootstrap Timer. |
| crp | Enable or disable debugging for the Bootstrap Router: Candidate-RP Timer. |
| hello | Enable or disable debugging for the specified Hello timer, or all Hello timers. |
| ht | Enable or disable debugging for the Hello timer: Hello Timer. |
| nlt | Enable or disable debugging for the Hello timer: Neighbor Liveness Timer. |
| tht | Enable or disable debugging for the Hello timer: Triggered Hello Timer. |
| joinprune | Enable or disable debugging for the specified JoinPrune timer, or all JoinPrune timers. |
| jt | Enable or disable debugging for the JoinPrune timer: upstream Join Timer. |
| et | Enable or disable debugging for the JoinPrune timer: Expiry Timer. |
| ppt | Enable or disable debugging for the JoinPrune timer: PrunePending Timer. |

| Parameter | Description |
|---|---|
| `kat` | Enable or disable debugging for the JoinPrune timer: KeepAlive Timer. |
| `ot` | Enable or disable debugging for the JoinPrune timer: Upstream Override Timer. |
| `register` | Enable or disable debugging for the Register timers. |
| `rst` | Enable or disable debugging for the Register timer: Register Stop Timer. |

**Default** By default, all debugging is disabled.

**Mode** Privileged Exec and Global Configuration

**Examples** To enable debugging for the PIM-SMv6 Bootstrap Router bootstrap timer, use the commands:

```
awplus(config)# debug ipv6 pim sparse-mode timer bsr bst
```

To enable debugging for the PIM-SMv6 Hello: neighbor liveness timer, use the command:

```
awplus(config)# debug ipv6 pim sparse-mode timer hello ht
```

To enable debugging for the PIM-SMv6 Joinprune expiry timer, use the command:

```
awplus# debug ipv6 pim sparse-mode timer joinprune et
```

To disable debugging for the PIM-SMv6 Register timer, use the command:

```
awplus# no debug ipv6 pim sparse-mode timer register
```

**Related commands** show debugging ipv6 pim sparse-mode

# ipv6 pim anycast-rp

**Overview** Use this command to configure Anycast RP (Rendezvous Point) in an RP set.

Use the **no** variant of this command to remove the configuration.

**Syntax**

```
ipv6 pim anycast-rp <anycast-rp-address> <member-rp-address>
no ipv6 pim anycast-rp <anycast-rp-address>
[<member-rp-address>]
```

| Parameter | Description |
|---|---|
| *<anycast-rp-address>* | <X:X::X:X> Specify an Anycast IPv6 address to configure an Anycast RP (Rendezvous Point) in a RP set. |
| *<member-rp-address>* | <A:B::C:D> Specify an Anycast RP (Rendezvous Point)IPv6 address to configure an Anycast RP in a RP set. |

**Mode** Global Configuration

**Usage notes** Anycast is a network addressing and routing scheme where data is routed to the nearest or best destination as viewed by the routing topology. Compared to unicast with a one-to-one association between network address and network endpoint, and multicast with a one-to-many association between network address and network endpoint; anycast has a one-to-many association between network address and network endpoint. For anycast, each destination address identifies a set of receiver endpoints, from which only one receiver endpoint is chosen.

Anycast is often implemented using BGP to simultaneously advertise the same destination IPv6 address range from many sources, resulting in packets addressed to destination addresses in this range being routed to the nearest source announcing the given destination IPv6 address.

Use this command to specify the Anycast RP configuration in the Anycast RP set. Use the **no** variant of this command to remove the Anycast RP configuration. Note that the member RP address is optional when using the **no** parameter to remove the Anycast RP configuration. removing the anycast RP address also removes the member RP address.

**Examples** The following example shows how to configure the Anycast RP address with **ipv6 pim anycast-rp**:

```
awplus# configure terminal
awplus(config)# ipv6 forwarding
awplus(config)# ipv6 multicast-routing
awplus(config)# ipv6 pim anycast-rp 2:2::2:2 20:20::20:20
```

The following example shows how to remove the Anycast RP in the RP set specifying only the anycast RP address with **no ipv6 pim anycast-rp**, but not specifying the member RP address:

```
awplus# configure terminal
awplus(config)# no ipv6 pim anycast-rp 2:2::2:2 20:20::20:20
```

# ipv6 pim bsr-border

**Overview** Use the **ipv6 pim bsr-border** command to prevent Bootstrap Router (BSR) messages from being sent or received through a VLAN interface. The BSR border is the border of the PIM-SMv6 domain.

Use the **no** variant of this command to disable the configuration set with **ipv6 pim bsr-border**.

**Syntax**

```
ipv6 pim bsr-border
no ipv6 pim bsr-border
```

**Mode** Interface Configuration for a VLAN interface or a PPP interface.

**Usage** When this command is configured on a VLAN interface, no PIM-SMv6 BSR messages will be sent or received through the interface. Configure an interface bordering another PIM- SMv6 domain with this command to avoid BSR messages from being exchanged between the two PIM-SMv6 domains.

BSR messages should not be exchanged between different domains, because devices in one domain may elect Rendezvous Points (RPs) in the other domain, resulting in loss of isolation between the two PIM domains that would stop the PIM-SMv6 protocol from working as intended.

**Examples** The following example configures the VLAN interface vlan2 to be the PIM-SMv6 domain border:

```
awplus# configure terminal
awplus(config)# ipv6 forwarding
awplus(config)# ipv6 multicast-routing
awplus(config)# interface vlan2
awplus(config-if)# ipv6 enable
awplus(config-if)# ipv6 pim bsr-border
```

The following example removes the VLAN interface vlan2 from the PIM-SMv6 domain border:

```
awplus# configure terminal
awplus(config)# interface vlan2
awplus(config-if)# no ipv6 pim bsr-border
```

The following example configures the PPP interface ppp0 to be the PIM -SMv6 domain border:

```
awplus# configure terminal
awplus(config)# ipv6 forwarding
awplus(config)# ipv6 multicast-routing
awplus(config)# interface ppp0
awplus(config-if)# ipv6 enable
awplus(config-if)# ipv6 pim bsr-border
```

The following example removes the PPP interface ppp0 from the PIM-SMv6 domain border:

```
awplus# configure terminal
awplus(config)# interface ppp0
awplus(config-if)# no ipv6 pim bsr-border
```

# ipv6 pim bsr-candidate

**Overview** Use this command to give the device the candidate BSR (Bootstrap Router) status using the specified IPv6 address mask of the interface.

Use the **no** variant of this command to withdraw the address of the interface from being offered as a BSR candidate.

**Syntax**

```
ipv6 pim bsr-candidate <interface> [<hash>] [<priority>]
no ipv6 pim bsr-candidate [<interface>]
```

| Parameter | Description |
|---|---|
| *<interface>* | Specify the interface. For instance, VLAN interface `vlan2`. |
| *<hash>* | <0-128> configure the hash mask length used for RP selection. The default hash value if you do not configure this parameter is 126. |
| *<priority>* | <0-255> configure priority for a BSR candidate. Note that you must also specify the *<hash>* (mask length) when specifying the *<priority>*. The default priority if you do not configure this parameter is 64. |

**Mode** Global Configuration

**Default** The default hash parameter value is 126 and the default priority parameter value is 64.

**Examples** To set the BSR candidate to the VLAN interface vlan2, with the optional mask length and BSR priority parameters, enter the commands shown below:

```
awplus# configure terminal
awplus(config)# ipv6 forwarding
awplus(config)# ipv6 multicast-routing
awplus(config)# ipv6 pim bsr-candidate vlan2 20 30
```

To withdraw the address of vlan2 from being offered as a BSR candidate, enter:

```
awplus# configure terminal
awplus(config)# no ipv6 pim bsr-candidate vlan2
```

To set the BSR candidate to the PPP interface ppp0, with the optional mask length and BSR priority parameters, enter the commands shown below:

```
awplus# configure terminal
awplus(config)# ipv6 forwarding
awplus(config)# ipv6 multicast-routing
awplus(config)# ipv6 pim bsr-candidate ppp0 20 30
```

To withdraw the address of ppp0 from being offered as a BSR candidate, enter:

```
awplus# configure terminal
awplus(config)# no ipv6 pim bsr-candidate ppp0
```

# ipv6 pim cisco-register-checksum

**Overview** Use this command to configure the option to calculate the Register Checksum over the whole packet. This command is used to inter-operate with older Cisco IOS versions.

Use the **no** variant of this command to disable this option.

**Syntax**

```
ipv6 pim cisco-register-checksum
no ipv6 pim cisco-register-checksum
```

**Default** This command is disabled by default. By default, Register Checksum is calculated only over the header.

**Mode** Global Configuration

**Example**

```
awplus# configure terminal
awplus(config)# ipv6 forwarding
awplus(config)# ipv6 multicast-routing
awplus(config)# ipv6 pim cisco-register-checksum
awplus# configure terminal
awplus(config)# no ipv6 pim cisco-register-checksum
```

# ipv6 pim crp-cisco-prefix

**Overview**

Use this command to interoperate with Cisco devices that conform to an earlier draft standard. Some Cisco devices might not accept candidate RPs with a group prefix number of zero. Note that the latest BSR specification prohibits sending RP advertisements with prefix 0.

Use the **no** variant of this command to revert to the default settings.

**Syntax**

```
ipv6 pim crp-cisco-prefix
no ipv6 pim crp-cisco-prefix
```

**Mode**

Global Configuration

**Usage**

Cisco's BSR code does not conform to the latest BSR draft, it does not accept candidate RPs with a group prefix number of zero. To make the candidate RP work with a Cisco BSR, use the **ipv6 pim crp-cisco-prefix** command when interoperating with older versions of Cisco IOS.

**Example**

```
awplus# configure terminal
awplus(config)# ipv6 forwarding
awplus(config)# ipv6 multicast-routing
awplus(config)# ipv6 pim crp-cisco-prefix
awplus# configure terminal
awplus(config)# no ipv6 pim crp-cisco-prefix
```

**Related commands**

ipv6 pim rp-candidate

# ipv6 pim dr-priority

**Overview** Use this command to set the Designated Router priority value.

Use the **no** variant of this command to disable this function.

**Syntax**

```
ipv6 pim dr-priority  <priority>
no ipv6 pim dr-priority [<priority>]
```

| Parameter | Description |
|---|---|
| *<priority>* | <0-4294967294> Specify the Designated Router priority value. Note that a higher value has a higher preference or higher priority. |

**Default** The default value is 1. The negated form of this command restores the value to the default.

**Mode** Interface Configuration for a VLAN interface or a PPP interface.

**Examples** To set the Designated Router priority value to 11234 for the VLAN interface vlan2, apply the commands as shown below:

```
awplus# configure terminal
awplus(config)# ipv6 forwarding
awplus(config)# ipv6 multicast-routing
awplus(config)# interface vlan2
awplus(config-if)# ipv6 enable
awplus(config-if)# ipv6 pim dr-priority 11234
```

To disable the Designated Router priority value for the VLAN interface vlan2, apply the commands as shown below:

```
awplus# configure terminal
awplus(config)# interface vlan2
awplus(config-if)# no ipv6 pim dr-priority
```

To set the Designated Router priority value to 11234 for the PPP interface ppp0, apply the commands as shown below:

```
awplus# configure terminal
awplus(config)# ipv6 forwarding
awplus(config)# ipv6 multicast-routing
awplus(config)# interface ppp0
awplus(config-if)# ipv6 enable
awplus(config-if)# ipv6 pim dr-priority 11234
```

To disable the Designated Router priority value for the PPP interface ppp0, apply the commands as shown below:

```
awplus# configure terminal
awplus(config)# interface ppp0
awplus(config-if)# no ipv6 pim dr-priority
```

**Related commands**

ipv6 pim ignore-rp-set-priority

# ipv6 pim exclude-genid

**Overview** Use this command to exclude the GenID option from Hello packets sent out by the PIM-SMv6 module on a particular interface. This command is used to inter-operate with older Cisco IOS versions.

Use the **no** variant of this command to revert to default settings.

**Syntax**

```
ipv6 pim exclude-genid
no ipv6 pim exclude-genid
```

**Default** By default, this command is disabled; the GenID option is included.

**Mode** Interface Configuration for a VLAN interface or a PPP interface.

**Examples**

```
awplus# configure terminal
awplus(config)# ipv6 forwarding
awplus(config)# ipv6 multicast-routing
awplus(config)# interface vlan2
awplus(config-if)# ipv6 enable
awplus(config-if)# ipv6 pim exclude-genid
awplus# configure terminal
awplus(config)# ipv6 forwarding
awplus(config)# ipv6 multicast-routing
awplus(config)# interface ppp0
awplus(config-if)# ipv6 enable
awplus(config-if)# ipv6 pim exclude-genid
awplus# configure terminal
awplus(config)# interface vlan2
awplus(config-if)# no ipv6 pim exclude-genid
```

# ipv6 pim ext-srcs-directly-connected

**Overview** Use this command to configure PIM-SMv6 to treat all source traffic arriving on the interface as though it was sent from a host directly connected to the interface.

Use the **no** variant of this command to configure PIM-SMv6 to treat only directly connected sources as directly connected.

**Syntax**

```
ipv6 pim ext-srcs-directly-connected
no ipv6 pim ext-srcs-directly-connected
```

**Default** The **no** variant of this command is the default behavior.

**Mode** Interface Configuration for a VLAN interface or a PPP interface.

**Example** To configure PIM-SMv6 to treat all sources as directly connected for VLAN interface vlan2, use the following commands:

```
awplus# configure terminal
awplus(config)# ipv6 forwarding
awplus(config)# ipv6 multicast-routing
awplus(config)# interface vlan2
awplus(config-if)# ipv6 enable
awplus(config-if)# ipv6 pim ext-srcs-directly-connected
```

To configure PIM-SMv6 to treat only directly connected sources as directly connected for VLAN interface vlan2, use the following commands:

```
awplus# configure terminal
awplus(config)# interface vlan2
awplus(config-if)# no ipv6 pim ext-srcs-directly-connected
```

To configure PIM to treat all sources as directly connected for PPP interface ppp0, use the following commands:

```
awplus# configure terminal
awplus(config)# ipv6 forwarding
awplus(config)# ipv6 multicast-routing
awplus(config)# interface ppp0
awplus(config-if)# ipv6 enable
awplus(config-if)# ipv6 pim ext-srcs-directly-connected
```

To configure PIM to treat only directly connected sources as directly connected for PPP interface ppp0, use the following commands:

```
awplus# configure terminal
awplus(config)# interface ppp0
awplus(config-if)# no ipv6 pim ext-srcs-directly-connected
```

# ipv6 pim hello-holdtime

**Overview** This command configures a hello-holdtime value. You cannot configure a hello-holdtime value that is less than the current hello-interval.

Use the **no** variant of this command to return it to its default of 3.5 * the current hello-interval.

**Syntax**

```
ipv6 pim hello-holdtime <holdtime>
no ipv6 pim hello-holdtime
```

| Parameter | Description |
|---|---|
| *<holdtime>* | <1-65535><br>The holdtime value in seconds (no fractional seconds are accepted). |

**Default** The default hello-holdtime value is 3.5 * the current hello-interval. The default hello- holdtime is restored using the negated form of this command.

**Mode** Interface Configuration for a VLAN interface or a PPP interface.

**Usage** Each time the hello interval is updated, the hello holdtime is also updated, according to the following rules:

If the hello holdtime is not configured; or if the hello holdtime is configured and less than the current hello-interval value, it is modified to the (3.5 * hello interval). Otherwise, it retains the configured value.

**Examples**

```
awplus# configure terminal
awplus(config)# ipv6 forwarding
awplus(config)# ipv6 multicast-routing
awplus(config)# interface vlan2
awplus(config-if)# ipv6 enable
awplus(config-if)# ipv6 pim hello-holdtime 123
awplus# configure terminal
awplus(config)# ipv6 forwarding
awplus(config)# ipv6 multicast-routing
awplus(config)# interface ppp0
awplus(config-if)# ipv6 enable
awplus(config-if)# ipv6 pim hello-holdtime 123
awplus# configure terminal
awplus(config)# interface vlan2
awplus(config-if)# no ipv6 pim hello-holdtime
```

# ipv6 pim hello-interval

**Overview** This command configures a hello-interval value for PIM-SMv6.

Use the **no** variant of this command to reset the hello-interval for PIM-SMv6 to the default.

**Syntax**

```
ipv6 pim hello-interval <interval>
no ipv6 pim hello-interval
```

| Parameter | Description |
|---|---|
| *<interval>* | <1-65535> The value in seconds (no fractional seconds accepted). |

**Default** The default hello-interval value is 30 seconds. The default is restored using the negated form of this command.

**Mode** Interface Configuration for a VLAN interface or a PPP interface.

**Usage** When the hello interval is configured, and the hello holdtime is not configured, or when the configured hello-holdtime value is less than the new hello-interval value; the holdtime value is modified to the (3.5 * hello interval). Otherwise, the hello-holdtime value is the configured value.

**Example**

```
awplus# configure terminal
awplus(config)# ipv6 forwarding
awplus(config)# ipv6 multicast-routing
awplus(config)# interface vlan2
awplus(config-if)# ipv6 enable
awplus(config-if)# ipv6 pim hello-interval 123
awplus# configure terminal
awplus(config)# ipv6 forwarding
awplus(config)# ipv6 multicast-routing
awplus(config)# interface ppp0
awplus(config-if)# ipv6 enable
awplus(config-if)# ipv6 pim hello-interval 123
awplus# configure terminal
awplus(config)# interface vlan2
awplus(config-if)# no ipv6 pim hello-interval
```

# ipv6 pim ignore-rp-set-priority

**Overview** Use this command to ignore the RP-SET priority value, and use only the hashing mechanism for RP selection.

Use the **no** variant of this command to disable this setting.

**Syntax**

```
ipv6 pim ignore-rp-set-priority
no ipv6 pim ignore-rp-set-priority
```

**Mode** Global Configuration

**Usage** This command is used to inter-operate with older Cisco IOS versions.

**Example**

```
awplus# configure terminal
awplus(config)# ipv6 forwarding
awplus(config)# ipv6 multicast-routing
awplus(config)# ipv6 pim ignore-rp-set-priority
awplus# configure terminal
awplus(config)# no ipv6 pim ignore-rp-set-priority
```

# ipv6 pim jp-timer

**Overview** Use this command to set the PIM-SMv6 join/prune timer. Note that the value set by the join/prune timer is the value that the device puts into the holdtime field of the join/prune packets it sends to its neighbors.

Use the **no** variant of this command to return the PIM-SMv6 join/prune timer to its default value of 210 seconds.

**Syntax**

```
ipv6 pim jp-timer <1-65535>
no ipv6 pim jp-timer [<1-65535>]
```

| Parameter | Description |
|---|---|
| *<1-65535>* | Specifies the Join/Prune timer value. The default value is 210 seconds. |

**Default** The default PIM-SMv6 join/prune timer value is 210 seconds.

**Mode** Global Configuration

**Example**

```
awplus# configure terminal
awplus(config)# ipv6 forwarding
awplus(config)# ipv6 multicast-routing
awplus(config)# ipv6 pim jp-timer 300
awplus# configure terminal
awplus(config)# no ipv6 pim jp-timer
```

# ipv6 pim neighbor-filter

**Overview** The AR3050S and AR4050S devices don't support access control list in 5.4.5-0.1 release.

This command enables filtering of neighbors on the VLAN interface. When configuring a neighbor filter, PIM-SMv6 will either not establish adjacency with the neighbor, or terminate adjacency with the existing neighbors if denied by the filtering IPv6 access list.

Use the **no** variant of this command to disable this function.

**Syntax**

```
ipv6 pim neighbor-filter <IPv6-accesslist>
no ipv6 pim neighbor-filter <IPv6-accesslist>
```

| Parameter | Description |
|---|---|
| *<IPv6-accesslist>* | Specify a Standard or an Extended software IPv6 access list name for the PIM-SMv6 neighbor filter. |

**Default** By default, there is no neighbor filtering applied to an interface.

**Mode** Interface Configuration for a VLAN interface or a PPP interface.

**Example**

```
awplus# configure terminal
awplus(config)# ipv6 forwarding
awplus(config)# ipv6 multicast-routing
awplus(config)# interface ppp0
awplus(config-if)# ipv6 enable
awplus(config-if)# ipv6 pim neighbor-filter filter1
```

# ipv6 pim register-rate-limit

**Overview** Use this command to configure the rate of register packets sent by this DR, in units of packets per second. The configured rate is per (S, G) state, and is not a system wide rate.

Use the **no** variant of this command to remove the limit and reset to the default rate limit.

**Syntax**

```
ipv6 pim register-rate-limit <1-65535>
no ipv6 pim register-rate-limit
```

| Parameter | Description |
|---|---|
| *<1-65535>* | Specifies the maximum number of packets that can be sent per second. |

**Mode** Global Configuration

**Default** The default is 0, as reset with the **no** variant, which also specifies an unlimited rate limit.

**Examples**

```
awplus# configure terminal
awplus(config)# ipv6 forwarding
awplus(config)# ipv6 multicast-routing
awplus(config)# ipv6 pim register-rate-limit 3444
awplus# configure terminal
awplus(config)# no ipv6 pim register-rate-limit 3444
```

# ipv6 pim register-rp-reachability

**Overview** Use this command to enable the RP reachability check for PIMv6 Register processing at the DR. The default setting is no checking for RP-reachability.

Use the **no** variant of this command to disable this processing.

**Syntax**

```
ipv6 pim register-rp-reachability
no ipv6 pim register-rp-reachability
```

**Default** This command is disabled; by default, there is no checking for RP-reachability.

**Mode** Global Configuration

**Examples**

```
awplus# configure terminal
awplus(config)# ipv6 forwarding
awplus(config)# ipv6 multicast-routing
awplus(config)# ipv6 pim register-rp-reachability
awplus# configure terminal
awplus(config)# no ipv6 pim register-rp-reachability
```

# ipv6 pim register-source

**Overview** Use this command to configure the source IPv6 address of register packets sent by this DR, overriding the default source IPv6 address, which is the IPv6 address of the RPF interface toward the source host.

Use the **no** variant of this command to remove the IPv6 source address of Register packets sent by this DR, reverting back to use the default IPv6 source address that is the address of the RPF interface toward the source host.

**Syntax**

```
ipv6 pim register-source [<source-IPv6-address>|<interface>]
no ipv6 pim register-source
```

| Parameter | Description |
|---|---|
| *<source-IPv6-address>* | The IPv6 address, entered in the form X:X::X:X, to be used as the source of the register packets. |
| *<interface>* | The name of the VLAN interface to be used as the source of the register packets. |

**Usage** The configured address must be a reachable address to be used by the RP to send corresponding Register-Stop messages in response. It is normally the local loopback IPv6 interface address, but can also be a physical IPv6 address. This IPv6 address must be advertised by unicast routing protocols on the DR. The configured interface does not have to be PIM-SMv6 enabled.

**Mode** Global Configuration

**Examples**

```
awplus# configure terminal
awplus(config)# ipv6 forwarding
awplus(config)# ipv6 multicast-routing
awplus(config)# ipv6 pim register-source 3ffe::24:2
awplus# configure terminal
awplus(config)# ipv6 forwarding
awplus(config)# ipv6 multicast-routing
awplus(config)# ipv6 pim register-source vlan2
awplus# configure terminal
awplus(config)# ipv6 forwarding
awplus(config)# ipv6 multicast-routing
awplus(config)# no ipv6 pim register-source
```

# ipv6 pim register-suppression

**Overview** Use this command to configure the register-suppression time, in seconds, overriding the default of 60 seconds.

Use the **no** variant of this command to reset the value to its default of 60 seconds.

**Syntax**

```
ipv6 pim register-suppression <1-65535>
no ipv6 pim register-suppression
```

| Parameter | Description |
|---|---|
| *<1-65535>* | Register suppression on time in seconds. |

**Mode** Global Configuration

**Default** The default PIM-SMv6 register suppression time is 60 seconds, and is restored with the no variant of this command.

**Usage** Configuring this value modifies register-suppression time at the DR. Configuring this value at the RP modifies the RP-keepalive-period value if the ipv6 pim rp-register-kat command is not used.

**Examples**

```
awplus# configure terminal
awplus(config)# ipv6 forwarding
awplus(config)# ipv6 multicast-routing
awplus(config)# ipv6 pim register-suppression 192
awplus# configure terminal
awplus(config)# no ipv6 pim register-suppression
```

# ipv6 pim rp-address

**Overview**

The AR3050S and AR4050 devices don't support access control list in 5.4.5-0.1 release.

Use this command to statically configure RP (Rendezvous Point) address for IPv6 multicast groups.

Use the **no** variant of this command to remove a statically configured RP (Rendezvous Point) address for IPv6 multicast groups.

**Syntax**

```
ipv6 pimv6 rp-address <IPv6-address>
no ipv6 pim rp-address <IPv6-address>
```

| Parameter | Description |
|---|---|
| *<IPv6-address>* | Specify the IPv6 address of the Rendezvous Point, entered in the form X:X::X:X. |

**Mode**

Global Configuration

**Usage notes**

The AlliedWare Plus™ PIM-SMv6 implementation supports multiple static RPs. It also supports usage of static-RP and BSR mechanism simultaneously. The **ipv6 pim rp-address** command is used to statically configure the RP address for IPv6 multicast groups.

You need to understand the following information before using this command.

If the RP-address that is configured by the BSR, and the RP-address that is configured statically, are both available for a group range, then the RP-address configured through BSR is chosen over the statically configured RP-address.

If multiple static-RPs are available for a group range, then one with the highest IPv6 address is chosen.

After configuration, the RP-address is inserted into a static-RP group tree based on the configured group ranges. For each group range, multiple static-RPs are maintained in a list. This list is sorted in a descending order of IPv6 addresses. When selecting static-RPs for a group range, the first element (which is the static-RP with highest IPv6 address) is chosen.

RP-address deletion is handled by removing the static-RP from all the existing group ranges and recalculating the RPs for existing TIB states if required.

Group mode and RP address mappings learned through BSR take precedence over mappings statistically defined by the ipv6 pim rp-address command. Commands with the override keyword take precedence over dynamically learned mappings.

**Examples**

```
awplus# configure terminal
awplus(config)# no ipv6 pim rp-address 3ffe:30:30:5::153 G2
```

**Related commands**

ipv6 pim rp-candidate

ipv6 pim rp-register-kat

# ipv6 pim rp-candidate

**Overview** Use this command to make the device an RP (Rendezvous Point) candidate, using the IPv6 address of the specified VLAN interface.

Use the **no** variant of this command to stop the device from being an RP candidate.

**Syntax**

```
ipv6 pim rp-candidate <interface> [priority <priority>|interval
<interval>|grouplist <accesslist>]
no ipv6 pim rp-candidate [<interface>]
```

| Parameter | Description |
|---|---|
| *<interface>* | Specify a VLAN interface name. |
| *<priority>* | Specify the priority for the RP candidate in the range 0 to 255. |
| *<interval>* | Specify a candidate RP advertisement interval in the range 1 to 16383 (seconds). |
| *<accesslist>* | Specify a Standard or an Extended software IPv6 access list name. |

**Default** The priority value for a candidate RP is 192 by default until specified using the **priority** parameter.

**Mode** Global Configuration

**Usage notes** Note that issuing the command **ipv6 pim rp-candidate** *<interface>* without optional **priority**, **interval**, or **grouplist** parameters will configure the candidate RP with a priority value of 192.

**Examples** To specify a priority of 3, use the following commands:

```
awplus# configure terminal
awplus(config)# ipv6 forwarding
awplus(config)# ipv6 multicast-routing
awplus(config)# ipv6 pim rp-candidate vlan2 priority 3
```

To stop the device from being an RP candidate on vlan2 , use the following commands:

```
awplus# configure terminal
awplus(config)# no ipv6 pim rp-candidate vlan2
```

**Related commands** ipv6 pim rp-address

ipv6 pim rp-register-kat

# ipv6 pim rp embedded

**Overview** Use this command to configure and enable embedded RP (Rendezvous Point) in PIM-SMv6.

This command only applies to the embedded RP group range **ff7x::/12** and **fffx::/12**.

Use the **no** variant of this command to disable embedded RP support. Since embedded RP support is enabled by default, use the **no** variant of this command to disable the default.

**Syntax**

```
ipv6 pim rp embedded
no ipv6 pim rp embedded
```

**Mode** Global Configuration

**Default** Embedded RP is enabled by default in the AlliedWare Plus implementation of PIM-SMv6.

**Examples** The following example re-enables embedded RP support, the default state in PIM-SMv6:

```
awplus# configure terminal
awplus(config)# ipv6 forwarding
awplus(config)# ipv6 multicast-routing
awplus(config)# ipv6 pim rp embedded
```

The following example disables embedded RP support, which is enabled by default in PIM-SMv6:

```
awplus# configure terminal
awplus(config)# no ipv6 pim rp embedded
```

# ipv6 pim rp-register-kat

**Overview** Use this command to configure the Keep Alive Time (KAT) for (S,G) states at the RP (Rendezvous Point) to monitor PIM-SMv6 Register packets.

Use the **no** variant of this command to return the PIM-SMv6 KAT timer to its default value of 210 seconds.

**Syntax**

```
ipv6 pim rp-register-kat <1-65535>
no ipv6 pim rp-register-kat
```

| Parameter | Description |
|---|---|
| *<1-65536>* | Specify the KAT timer in seconds. The default value is 210 seconds. |

**Mode** Global Configuration

**Default** The default PIM-SMv6 KAT timer value is 210 seconds.

**Examples**

```
awplus# configure terminal
awplus(config)# ipv6 forwarding
awplus(config)# ipv6 multicast-routing
awplus(config)# ipv6 pim rp-register-kat 3454
awplus# configure terminal
awplus(config)# no ipv6 pim rp-register-kat
```

**Related commands** ipv6 pim rp-address

ipv6 pim rp-candidate

# ipv6 pim sparse-mode

**Overview** Use this command to enable PIM-SMv6 on a VLAN interface or a PPP interface.

Use the **no** variant of this command to disable PIM-SMv6 on a VLAN interface or a PPP interface.

**Syntax**

```
ipv6 pim sparse-mode
no ipv6 pim sparse-mode
```

**Mode** Interface Configuration for a VLAN interface or a PPP interface.

**Examples**

```
awplus# configure terminal
awplus(config)# ipv6 forwarding
awplus(config)# ipv6 multicast-routing
awplus(config)# interface vlan2
awplus(config-if)# ipv6 enable
awplus(config-if)# ipv6 pim sparse-mode
awplus# configure terminal
awplus(config)# interface vlan2
awplus(config-if)# no ipv6 pim sparse-mode
awplus# configure terminal
awplus(config)# ipv6 forwarding
awplus(config)# ipv6 multicast-routing
awplus(config)# interface ppp0
awplus(config-if)# ipv6 enable
awplus(config-if)# ipv6 pim sparse-mode
awplus# configure terminal
awplus(config)# interface ppp0
awplus(config-if)# no ipv6 pim sparse-mode
```

# ipv6 pim sparse-mode passive

**Overview** Use this command to enable and disable PIM-SMv6 passive mode operation for local members on a VLAN interface or a PPP interface.

Use the **no** variant of this command to disable PIM-SMv6 passive mode operation for local members on a VLAN interface or a PPP interface.

**Syntax**

```
ipv6 pim sparse-mode passive
no ipv6 pim sparse-mode passive
```

**Mode** Interface Configuration for a VLAN interface or a PPP interface.

**Usage** Passive mode essentially stops PIM-SMv6 transactions on the interface, allowing only the MLD mechanism to be active.

**Examples**

```
awplus# configure terminal
awplus(config)# ipv6 forwarding
awplus(config)# ipv6 multicast-routing
awplus(config)# interface vlan2
awplus(config-if)# ipv6 enable
awplus(config-if)# ipv6 pim sparse-mode passive
awplus# configure terminal
awplus(config)# interface vlan2
awplus(config-if)# no ipv6 pim sparse-mode passive
awplus# configure terminal
awplus(config)# ipv6 forwarding
awplus(config)# ipv6 multicast-routing
awplus(config)# interface ppp0
awplus(config-if)# ipv6 enable
awplus(config-if)# ipv6 pim sparse-mode passive
awplus# configure terminal
awplus(config)# interface ppp0
awplus(config-if)# no ipv6 pim sparse-mode passive
```

# ipv6 pim spt-threshold

**Overview** This command turns on the ability for the last-hop PIM-SMv6 router to switch to SPT (shortest-path tree).

The **no** variant of this command turns off the ability for the last-hop PIM-SMv6 router to switch to SPT.

***NOTE:*** *The switching to SPT happens either at the receiving of the first data packet, or not at all; it is not rate-based.*

**Syntax**

```
ipv6 pim spt-threshold
no ipv6 pim spt-threshold
```

**Mode** Global Configuration

**Examples** To enable the last-hop PIM-SMv6 router to switch to SPT, use the following commands:

```
awplus# configure terminal
awplus(config)# ipv6 forwarding
awplus(config)# ipv6 multicast-routing
awplus(config)# ipv6 pim spt-threshold
```

To stop the last-hop PIM-SMv6 router from being able to switch to SPT, use the following commands:

```
awplus# configure terminal
awplus(config)# no ipv6 pim spt-threshold
```

# ipv6 pim ssm

**Overview** Use this command to define the Source Specific Multicast (SSM) range of IPv6 multicast addresses. PIM-SMv6 routers will only install (S,G) entries for multicast groups (addresses) residing in the SSM range.

Use the **no** variant of this command to disable the SSM range.

**Syntax**

```
ipv6 pim ssm [default]
no ipv6 pim ssm
```

| Parameter | Description |
|---|---|
| `default` | Named Standard Access List. Use FF3x::/32 group range for SSM. |

**Default** By default, the command is disabled.

**Mode** Global Configuration

**Usage** Any (*,G) or (S,G,rpt) joins received for multicast groups (addresses) within the range, are not installed in PIM-SMv6 mroute table.

**Examples** The following commands show how to set PIM-SSM as default:

```
awplus# configure terminal
awplus(config)# ipv6 pim ssm default
```

The following commands show how to disable PIM-SSM:

```
awplus# configure terminal
awplus(config)# no ipv6 pim ssm
```

# ipv6 pim unicast-bsm

**Overview** Use this command to enable support for the sending and receiving of unicast Boot Strap Messages (BSM) on a VLAN interface.

Use the **no** variant of this command to disable the sending and receiving of unicast BSM on a VLAN interface.

**Syntax**

```
ipv6 pim unicast-bsm
no ipv6 pim unicast-bsm
```

**Mode** Interface Configuration for a VLAN interface.

**Default** Unicast BSM is disabled by default on an interface.

**Usage** This command provides backward compatibility with older versions of the Boot Strap Router (BSR) specification, which directs unicast BSM to refresh the state of new or restarting neighbors. The current BSR specification defines a No Forward BSM to achieve the same result.

**Examples**

```
awplus# configure terminal
awplus(config)# ipv6 forwarding
awplus(config)# ipv6 multicast-routing
awplus(config)# interface vlan2
awplus(config-if)# ipv6 enable
awplus(config-if)# ipv6 pim unicast-bsm
awplus# configure terminal
awplus(config)# interface vlan2
awplus(config-if)# no ipv6 pim unicast-bsm
```

# service pim6

**Overview** Use this command to enable IPv6 PIM sparse mode services.

Use the **no** version of the command to disable unused IPv6 PIM sparse mode services.

**Syntax**

```
service pim6
no service pim6
```

**Default** Enabled

**Mode** Global Configuration

**Usage notes** Sometimes it may be desirable to disable unused services, in order to reduce memory use.

Disabling the PIM services will only take effect after you save the configuration and restart the device.

**Example** To disable the IPv6 PIM sparse mode service, use the commands:

```
awplus# configure terminal
awplus(config)# no service pim6
```

**Output** Figure 40-2: Example output from **no service pim6**

```
awplus(config)#no service pim6
% Save the config and restart the device for this change to take
effect
```

**Command changes** Version 5.5.0-0.1: command added

# show debugging ipv6 pim sparse-mode

**Overview** Use this command to see what debugging is turned on for PIM-SMv6.

For information on filtering and saving command output, see the "Getting_Started with AlliedWare Plus" Feature Overview and Configuration_Guide.

**Syntax**

```
show debugging ipv6 pim sparse-mode
```

**Mode** User Exec and Privileged Exec

**Example** To display PIM-SMv6 debugging settings, use the command:

```
awplus# show debugging ipv6 pim sparse-mode
```

Figure 40-3: Example output from the **show debugging ipv6 pim sparse-mode** command

```
awplus#show debugging ipv6 pim sparse-mode
Debugging status:
  PIM event debugging is on
  PIM MFC debugging is on
  PIM state debugging is on
  PIM packet debugging is on
  PIM Hello HT timer debugging is on
  PIM Hello NLT timer debugging is on
  PIM Hello THT timer debugging is on
  PIM Join/Prune JT timer debugging is on
  PIM Join/Prune ET timer debugging is on
  PIM Join/Prune PPT timer debugging is on
  PIM Join/Prune KAT timer debugging is on
  PIM Join/Prune OT timer debugging is on
  PIM Assert AT timer debugging is on
  PIM Register RST timer debugging is on
  PIM Bootstrap BST timer debugging is on
  PIM Bootstrap CRP timer debugging is on
```

**Related commands**

debug ipv6 pim sparse-mode

undebug ipv6 pim sparse-mode

# show ipv6 pim sparse-mode bsr-router

**Overview** Use this command to show the PIM-SMv6 Bootstrap Router (BSR) IPv6 address.

For information on filtering and saving command output, see the "Getting_Started with AlliedWare Plus" Feature Overview and Configuration_Guide.

**Syntax**

```
show ipv6 pim sparse-mode bsr-router
```

**Mode** User Exec and Privileged Exec

**Example** To display the BSR IPv6 address, use the command:

```
awplus# show ipv6 pim sparse-mode bsr-router
```

**Output** Figure 40-4: Example output from the **show ipv6 pim sparse-mode bsr-router** command

```
awplus#show ipv6 pim sparse-mode bsr-router
PIM6v2 Bootstrap information
  BSR address: 2001:203::213 (?)
  Uptime:      00:36:25, BSR Priority: 64, Hash mask length: 126
  Expires:     00:01:46
  Role: Candidate BSR
  State: Candidate BSR

  Candidate RP: 2001:5::211(vlan5)
    Advertisement interval 60 seconds
    Next C-RP advertisement in 00:00:43
```

**Related commands**

show ipv6 pim sparse-mode rp mapping

show ipv6 pim sparse-mode neighbor

# show ipv6 pim sparse-mode interface

**Overview** Use this command to show PIM-SMv6 interface information. Note that you can specify an individual VLAN interface with the optional parameter. Alternatively, you can display PIM-SMv6 interface information for all interfaces if you omit the optional interface parameter.

For information on filtering and saving command output, see the "Getting_Started with AlliedWare Plus" Feature Overview and Configuration_Guide.

**Syntax** `show ipv6 pim sparse-mode interface`

**Mode** User Exec and Privileged Exec

**Examples** To display information about all PIM-SMv6 interfaces, use the command:

```
awplus# show ipv6 pim sparse-mode interface
```

```
awplus#show ipv6 pim sparse-mode interface
Interface VIFindex Ver/   Nbr    DR
                   Mode   Count  Priority
vlan2     0        v2/S   2      1
    Address       : fe80::207:e9ff:fe02:81d
    Global Address: 3ffe:192:168:1::53
    DR            : fe80::20e:cff:fe01:facc
vlan3     2        v2/S   2      1
    Address       : fe80::207:e9ff:fe02:21a2
    Global Address: 3ffe:192:168:10::53
    DR            : this system
```

**Table 1:** Parameters in the output from the **show ipv6 pim sparse-mode interface** command

| Parameters | Description |
|---|---|
| `Address` | Primary PIM-SMv6 address. |
| `Interface` | Name of the PIM-SMv6 interface. |
| `VIF Index` | The Virtual Interface index of the VLAN. |
| `Ver/Mode` | PIMv6 version/Sparse mode. |
| `Nbr Count` | Neighbor count of the PIM-SMv6 interface. |
| `DR Priority` | Designated Router priority. |
| DR | The IPv6 address of the Designated Router. |

**Related commands**

ipv6 pim sparse-mode

show ipv6 pim sparse-mode rp mapping

show ipv6 pim sparse-mode neighbor

# show ipv6 pim sparse-mode interface detail

**Overview** Use this command to show detailed PIM-SMv6 information for all PIM-SMv6 configured interfaces.

For information on filtering and saving command output, see the "Getting_Started with AlliedWare Plus" Feature Overview and Configuration_Guide.

**Syntax**

```
show ipv6 pim sparse-mode interface detail
```

**Mode** User Exec and Privileged Exec

**Example** To show detailed PIM-SMv6 information for all PIM-SMv6 configured interfaces, use the command:

```
awplus# show ipv6 pim sparse-mode interface detail
```

**Output** Figure 40-5: Example output from the **show ipv6 pim sparse-mode interface detail** command

```
awplus#show ipv6 pim sparse-mode interface detail
vlan2 (vif 0)
  Address fe80::207:e9ff:fe02:81d, DR fe80::20e:cff:fe01:facc
  Hello period 30 seconds, Next Hello in 21 seconds
  Triggered Hello period 5 seconds
  Secondary addresses:
   3ffe:192:168:1::53
  Neighbors:
   fe80::202:b3ff:fed4:69fe
   fe80::20e:cff:fe01:facc

vlan3 (vif 2):
  Address fe80::207:e9ff:fe02:21a2, DR fe80::207:e9ff:fe02:21a2
  Hello period 30 seconds, Next Hello in 20 seconds
  Triggered Hello period 5 seconds
  Secondary addresses:
   3ffe:192:168:10::53
  Neighbors:
```

# show ipv6 pim sparse-mode local-members

**Overview** Use this command to show detailed local member information on a VLAN interface configured for PIM-SMv6. If you do not specify a VLAN interface then detailed local member information is shown for all VLAN interfaces configured for PIM-SMv6.

For information on filtering and saving command output, see the "Getting_Started with AlliedWare Plus" Feature Overview and Configuration_Guide.

**Syntax**

```
show ipv6 pim sparse-mode local-members [<interface>]
```

| Parameter | Description |
|---|---|
| *<interface>* | Optional Specify the interface. For instance, VLAN interface `vlan2`. |

**Mode** User Exec and Privileged Exec

**Example** To show detailed PIM-SMv6 information for all PIM-SMv6 configured VLAN interfaces, use the command:

```
awplus# show ipv6 pim sparse-mode local-members
```

**Output** Figure 40-6: Example output from the **show ipv6 pim sparse-mode local-members** command

```
awplus#show ipv6 pim sparse-mode local-members
PIM Local membership information

vlan1:

  (*, ff02::1:ff6b:4783) : Include

vlan203:

  (*, ff0e:1::4) : Include
```

**Example** To show detailed PIM-SMv6 information for the PIM-SMv6 configured interface vlan1, use the command:

```
awplus# show ipv6 pim sparse-mode local-members vlan1
```

**Output** Figure 40-7: Example output from the **show ipv6 pim sparse-mode local-members vlan1** command

```
awplus#show ipv6 pim sparse-mode local-members vlan1
PIM Local membership information

vlan1:

  (*, ff02::1:ff6b:4783) : Include
```

# show ipv6 pim sparse-mode mroute

**Overview** This command displays the IPv6 multicast routing table, or the IPv6 multicast routing table based on the specified IPv6 address or addresses.

Two group IPv6 addresses cannot be entered simultaneously; two source IPv6 addresses cannot be entered simultaneously.

For information on filtering and saving command output, see the "Getting_Started with AlliedWare Plus" Feature Overview and Configuration_Guide.

**Syntax**

```
show ipv6 pim sparse-mode mroute
show ipv6 pim sparse-mode mroute <group-IPv6-address>
show ipv6 pim sparse-mode mroute <source-IPv6-address>
show ipv6 pim sparse-mode mroute <group-IPv6-address>
<source-IPv6-address>
show ipv6 pim sparse-mode mroute <source-IPv6-address>
<group-IPv6-address>
show ipv6 pim sparse-mode mroute brief
```

| Parameter | Description |
|---|---|
| *<group-IPv6-address>* | Group IPv6 address, entered in the form X:X::X:X. Based on the group and source IPv6 address, the output is the selected route if present in the multicast route tree. |
| *<source-IPv6-address>* | Source IPv6 address, entered in the form X:X::X:X. Based on the source and group IPv6 address, the output is the selected route if present in the multicast route tree. |
| `brief` | Brief display |

**Mode** User Exec and Privileged Exec

**Usage notes** Note that when a feature license is enabled, the output for the show ipv6 pim sparse-mode mroute command will only show 100 interfaces because of the terminal display width limit. Use the show ipv6 pim sparse-mode mroute detail command to display detailed entries of the IPv6 multicast routing table.

**Examples**

```
awplus# show ipv6 pim sparse-mode mroute
awplus# show ipv6 pim sparse-mode mroute 2001:db8::
awplus# show ipv6 pim sparse-mode mroute 2001:db8:: 2002:db8::
awplus# show ipv6 pim sparse-mode mroute brief
```

Figure 40-8: Example output from the **show ipv6 pim sparse-mode mroute** command

```
awplus#show ipv6 pim sparse-mode mroute
IPv6 Multicast Routing Table

(*,*,RP) Entries: 0(*,G) Entries: 0
(S,G) Entries: 2
(S,G,rpt) Entries: 2
FCR Entries: 0(2001:db8:ffff::1, ff08::1)
RPF nbr: fe80::b:10:0:1
RPF idx: vlan10
SPT bit: 1
Upstream State: JOINED
 Local            0
 Joined           1
 Asserted Winner  0
 Asserted Loser   0
 Outgoing         1(2001:db8:ffff::1, ff08::1, rpt)
RP: ::
RPF nbr: fe80::b:10:0:1
RPF idx: vlan10
Upstream State: RPT NOT JOINED
 Local     0
 Pruned    0
 Outgoing  0(2001:db8:ffff::1, ff08::2)
RPF nbr: fe80::b:10:0:1
RPF idx: vlan10
SPT bit: 1
Upstream State: JOINED
 Local            0
 Joined           1
 Asserted Winner  0
 Asserted Loser   0
 Outgoing         1
```

Figure 40-9: Example output from the **show ipv6 pim sparse-mode mroute brief** command

```
awplus#show ipv6 pim sparse-mode mroute brief
IPv6 Multicast Routing Table

(*,*,RP) Entries: 0
(*,G) Entries: 0
(S,G) Entries: 2
(S,G,rpt) Entries: 2
FCR Entries: 0
```

# show ipv6 pim sparse-mode mroute detail

**Overview** This command displays detailed entries of the IPv6 multicast routing table, or detailed entries of the IPv6 multicast routing table based on the specified IPv6 address or addresses.

Two group IPv6 addresses cannot be used simultaneously; two IPv6 source addresses cannot be used simultaneously.

For information on filtering and saving command output, see the "Getting_Started with AlliedWare Plus" Feature Overview and Configuration_Guide.

**Syntax**

```
show ipv6 pim sparse-mode mroute [<source-IPv6-address>] detail
```

| Parameter | Description |
|---|---|
| `<source-IPv6-address>` | Source IPv6 address, entered in the form X:X::X:X. Output is all multicast entries belonging to that source. |
| `detail` | Show detailed information. |

**Usage notes** Based on the group and source IPv6 address, the output is the selected route if present in the multicast route tree.

**Mode** User Exec and Privileged Exec

**Examples**

```
awplus# show ipv6 pim sparse-mode mroute detail
awplus# show ipv6 pim sparse-mode mroute 2001:db8:: detail
awplus# show ipv6 pim sparse-mode mroute 2001:db8:: 2002:db8::
detail
```

Figure 40-10: Example output from the **show ipv6 pim sparse-mode mroute detail** command

```
awplus#show ipv6 pim sparse-mode mroute detail
IPv6 Multicast Routing Table

(*,*,RP) Entries: 0
(*,G) Entries: 1
(S,G) Entries: 0
(S,G,rpt) Entries: 0
FCR Entries: 0

(*, ff13::10) Uptime: 00:00:09
  RP: ::, RPF nbr: None, RPF idx: None
  Upstream:
   State: JOINED, SPT Switch: Enabled, JT: off
   Macro state: Join Desired,
  Downstream:
   vlan2:
     State: NO INFO, ET: off, PPT: off
     Assert State: NO INFO, AT: off
      Winner: ::, Metric: 4294967295l, Pref: 4294967295l, RPT bit: on
     Macro state: Could Assert, Assert Track
  Local Olist:
   vlan3
  FCR:
```

# show ipv6 pim sparse-mode neighbor

**Overview** Use this command to show the PIM-SMv6 neighbor information.

For information on filtering and saving command output, see the "Getting_Started with AlliedWare Plus" Feature Overview and Configuration_Guide.

**Syntax**

```
show ipv6 pim sparse-mode neighbor [<interface>]
[<IPv6-address>] [detail]
```

| Parameter | Description |
|---|---|
| *<interface>* | Interface name (e.g. `vlan2`). Show neighbors on an interface. |
| *<IPv6-address>* | Show neighbors with a particular address on an interface. The IPv6 address entered in the form X:X::X:X. |
| `detail` | Show detailed information. |

**Mode** User Exec and Privileged Exec

**Examples**

```
awplus# show ipv6 pim sparse-mode neighbor
awplus# show ipv6 pim sparse-mode neighbor vlan5 detail
```

Figure 40-11: Example output from the **show ipv6 pim sparse-mode neighbor** command

```
awplus#show ipv6 pim sparse-mode neighbor
Neighbor Address                    Interface   Uptime/Expires      DR
                                                                       Pri/Mode
fe80::202:b3ff:fed4:69fe             vlan2       05:33:52/00:01:41 1 /
fe80::20e:cff:fe01:facc              vlan3       05:33:53/00:01:26 1 / DR
```

Figure 40-12: Example output from the **show ipv6 pim sparse-mode neighbor interface detail** command

```
awplus#show ipv6 pim sparse-mode neighbor detail
Nbr fe80::211:11ff:fe44:4cd8 (vlan1), DR
 Expires in 64 seconds, uptime 00:00:53
 Holdtime: 70 secs, T-bit: off, Lan delay: 1, Override interval: 3
 DR priority: 100, Gen ID: 1080091886,
 Secondary addresses:
  3ffe:10:10:10:3::180
```

# show ipv6 pim sparse-mode nexthop

**Overview** Use this command to see the next hop information as used by PIM-SMv6.

For information on filtering and saving command output, see the "Getting_Started with AlliedWare Plus" Feature Overview and Configuration_Guide.

**Syntax** `show ipv6 pim sparse-mode nexthop`

**Mode** User Exec and Privileged Exec

**Example** `awplus# show ipv6 pim sparse-mode nexthop`

Figure 40-13: Example output from the **show ipv6 pim sparse-mode nexthop** command

```
awplus#show ipv6 pim sparse-mode nexthop
Flags: N = New, R = RP, S = Source, U = Unreachable
Destination           Type  Nexthop Nexthop Nexthop  Nexthop Metric     Pref   Refcnt
                            Num     Addr    Ifindex  Name
_____________________________________________________________________________________
3ffe:10:10:5::153    .RS.   1       fe80::20e:cff:fe01:facc  2     30   110    1
```

**Table 2:** Parameters in output of the **show ipv6 pim sparse-mode nexthop** command

| Parameter | Description |
|---|---|
| `Destination` | The destination address for which PIM-SMv6 requires next hop information. |
| `Type` | The type of destination, as indicated by the Flags description. N = New, R= RP, S = Source, U = Unreachable. |
| `Nexthop Num` | The number of next hops to the destination. PIM-SMv6 always uses only 1 next hop. |
| `Nexthop Addr` | The address of the primary next hop gateway. |
| `Nexthop IfIndex` | The interface on which the next hop gateway can be reached. |
| `Nexthop Name` | The name of next hop interface. |
| `Metric` | The metric of the route towards the destination. |
| `Preference` | The preference of the route towards destination. |
| `Refcnt` | Only used for debugging. |

# show ipv6 pim sparse-mode rp-hash

**Overview** Use this command to display the Rendezvous Point (RP) to be chosen based on the IPv6 group address selected.

For information on filtering and saving command output, see the "Getting Started with AlliedWare Plus" Feature Overview and Configuration Guide.

**Syntax**

```
show ipv6 pim sparse-mode rp-hash <IPv6-group-addr>
```

| Parameter | Description |
|---|---|
| *<IPv6-group-addr>* | The IPv6 group address used to find the RP, entered in the form X:X::X:X. |

**Mode** User Exec and Privileged Exec

**Example**

```
awplus# show ipv6 pim sparse-mode rp-hash ff04:10
```

Figure 40-14: Output from the **show ipv6 pim sparse-mode rp-hash** command:

```
awplus#show ipv6 pim sparse-mode rp-hash ff04::10
    RP: 3ffe:10:10:5::153
    Info source: 3ffe:10:10:5::153, via bootstrap
```

**Related commands** show ipv6 pim sparse-mode rp mapping

# show ipv6 pim sparse-mode rp mapping

**Overview** Use this command to show group-to-RP (Rendezvous Point) mappings, and the RP set.

For information on filtering and saving command output, see the "Getting_Started with AlliedWare Plus" Feature Overview and Configuration_Guide.

**Syntax**

```
show ipv6 pim sparse-mode rp mapping
```

**Mode** User Exec and Privileged Exec

**Example**

```
awplus# show ipv6 pim sparse-mode rp mapping
```

Figure 40-15: Output from the **show ipv6 pim sparse-mode rp mapping** command

```
awplus#show ipv6 pim sparse-mode rp mapping
PIM Group-to-RP Mappings
Group(s): ff00::/8
  RP: 3ffe:10:10:5::153
    Info source: 3ffe:10:10:5::153, via bootstrap, priority 192
         Uptime: 05:36:40
```

**Related commands** show ipv6 pim sparse-mode rp-hash

# show ipv6 pim sparse-mode rp nexthop

**Overview** Use this command to display the RP (Rendezvous Point) next hop information used by PIM-SMv6.

For information on filtering and saving command output, see the "Getting_Started with AlliedWare Plus" Feature Overview and Configuration_Guide.

**Syntax** `show ipv6 pim sparse-mode rp nexthop <RP-group-addr>`

| Parameter | Description |
|---|---|
| *<RP-group-addr>* | Specify the RP group address used to display next hop RP information, entered in the form X:X::X:X. |

**Mode** User Exec and Privileged Exec

**Example** `awplus# show ipv6 pim sparse-mode rp nexthop 3ffe:10:10:5::153`

Figure 40-16: Example output from the **show ipv6 pim sparse-mode rp nexthop** command

```
awplus#show ipv6 pim sparse-mode rp nexthop 3ffe:10:10:5::153
Flags: N = New, R = RP, S = Source, U = Unreachable
Destination           Type  Nexthop Nexthop Nexthop  Nexthop Metric     Pref   Refcnt
                            Num     Addr    Ifindex  Name
_____________________________________________________________________________________
3ffe:10:10:5::153    .RS.   1       fe80::20e:cff:fe01:facc  2     30   110    1
```

**Table 3:** Parameters in output of the **show ipv6 pim sparse-mode rp nexthop** command

| Parameter | Description |
|---|---|
| `Destination` | The destination address for which PIM-SMv6 requires next hop information. |
| `Type` | The type of destination, as indicated by the Flags description. N = New, R= RP, S = Source, U = Unreachable. |
| `Nexthop Num` | The number of next hops to the destination. PIM-SMv6 always uses only 1 next hop. |
| `Nexthop Addr` | The address of the primary next hop gateway. |
| `Nexthop IfIndex` | The interface on which the next hop gateway can be reached. |
| `Nexthop Name` | The name of next hop interface. |

**Table 3:** Parameters in output of the **show ipv6 pim sparse-mode rp nexthop** command (cont.)

| Parameter | Description |
|---|---|
| `Metric` | The metric of the route towards the destination. |
| `Preference` | The preference of the route towards destination. |
| `Refcnt` | Only used for debugging. |

# undebug all ipv6 pim sparse-mode

**Overview** Use this command to disable all PIM-SMv6 debugging.

**Syntax**

```
undebug all ipv6 pim sparse-mode
```

**Mode** Privileged Exec

**Example**

```
awplus# undebug all ipv6 pim sparse-mode
```

**Related commands** debug ipv6 pim sparse-mode

# undebug ipv6 pim sparse-mode

**Overview** Use this command to deactivate PIM-SMv6 debugging. Note that this command is an alias of the no variant of the debug ipv6 pim sparse-mode command.

**Syntax**

```
undebug ipv6 pim sparse-mode [all] [events] [mfc] [mib]
[nexthop] [nsm] [state] [timer]
```

| Parameter | Description |
|---|---|
| `all` | Deactivates all PIM-SMv6 debugging. |
| `events` | Deactivates debug printing of PIM-SMv6 events. |
| `mfc` | Deactivates debug printing of MFC (Multicast Forwarding Cache). |
| `mib` | Deactivates debug printing of PIM-SMv6 MIBs. |
| `nexthop` | Deactivates debug printing of PIM-SMv6 next hop communications. |
| `nsm` | Deactivates debugging of PIM-SMv6 NSM (Network Services Module) communications. |
| `state` | Deactivates debug printing of state transition on all PIM-SMv6 FSMs. |
| `timer` | Deactivates debug printing of PIM-SMv6 timers. |

**Mode** Privileged Exec and Global Configuration

**Example**

```
awplus# configure terminal
awplus(config)# terminal monitor
awplus(config)# undebug ipv6 pim sparse-mode all
awplus# configure terminal
awplus(config)# terminal monitor
awplus(config)# undebug ipv6 pim sparse-mode events
awplus# configure terminal
awplus(config)# terminal monitor
awplus(config)# undebug ipv6 pim sparse-mode nexthop
```

**Validation Output**

Figure 40-17: Example output from the **show debugging ipv6 pim sparse-mode** command after issuing the **undebug ipv6 pim sparse-mode all** command

```
awplus#undebug ipv6 pim sparse-mode all
awplus#show debugging ipv6 pim sparse-mode
PIM-SMv6 debugging status:
  PIM event debugging is off
  PIM MFC debugging is off
  PIM state debugging is off
  PIM packet debugging is off
  PIM Hello HT timer debugging is off
  PIM Hello NLT timer debugging is off
  PIM Hello THT timer debugging is off
  PIM Join/Prune JT timer debugging is off
  PIM Join/Prune ET timer debugging is off
  PIM Join/Prune PPT timer debugging is off
  PIM Join/Prune KAT timer debugging is off
  PIM Join/Prune OT timer debugging is off
  PIM Assert AT timer debugging is off
  PIM Register RST timer debugging is off
  PIM Bootstrap BST timer debugging is off
  PIM Bootstrap CRP timer debugging is off
  PIM mib debugging is off
  PIM nsm debugging is off
  PIM nexthop debugging is off
```

**Related commands**

debug ipv6 pim sparse-mode

show debugging ipv6 pim sparse-mode

undebug all ipv6 pim sparse-mode

# Part 5: Access and Security

# 41 Traffic Control Commands

## Introduction

**Overview** This chapter provides an alphabetical reference of commands used to configure traffic control. For more information, see the Traffic Control Feature Overview and Configuration Guide.

**Command List**


- "class (htb)" on page 1986
- "class (priority)" on page 1988
- "class (wrr)" on page 1990
- "debug traffic-control" on page 1992
- "interface (traffic-control)" on page 1993
- "l3-filtering enable" on page 1994
- "move rule (traffic-control)" on page 1995
- "policy (traffic-control)" on page 1996
- "red-curve" on page 1998
- "rule (traffic-control)" on page 2000
- "show debugging traffic-control" on page 2002
- "show running-config traffic-control" on page 2003
- "show traffic-control counters" on page 2005
- "show traffic-control interface" on page 2007
- "show traffic-control policy" on page 2009
- "show traffic-control red-curve" on page 2011
- "show traffic-control rule config-check" on page 2013
- "show traffic-control rule" on page 2014
- "show traffic-control" on page 2015

- "sub-class (htb)" on page 2016
- "sub-class (priority)" on page 2018
- "sub-class (wrr)" on page 2020
- "sub-sub-class (htb)" on page 2022
- "sub-sub-class (priority)" on page 2024
- "sub-sub-class (wrr)" on page 2026
- "traffic-control enable" on page 2028
- "traffic-control" on page 2029

# class (htb)

**Overview** Use this command to configure a hierarchy token bucket (HTB) class within a traffic control policy.

Use the **no** variant of this command to delete an existing class under a current policy.

**Syntax**

```
class <class-name> [cir <committed-rate>] [pir <peak-rate>]
[bc <1-100000000>] [be <1-100000000>] [preference <0-7>]
[queue-length <2-65536>] [set-dscp <dscp-value>] [red-curve
<red-curve-name>]
```

```
class <class-name> [cir <committed-rate>] [pir <peak-rate>]
[bc <1-100000000>] [be <1-100000000>] [preference <0-7>]
sub-class-policy htb
```

```
no class <class-name>
```

| Parameter | Description |
|---|---|
| *<class-name>* | Name of the class. |
| cir *<committed-rate>* | Set the Committed Information Rate (CIR) for the queue.<br>This parameter is compulsory when creating a new class. When editing an existing class, this parameter is optional. |
| pir *<peak-rate>* | Set the Peak Information Rate (PIR) for the queue. This is the rate of the queue under peak conditions. Specified in kbit/mbit/gbit per second, in the range 1kbit-100gbit. |
| bc *<1-100000000>* | Set the Committed Burst size (BC). This is the burst allowed above the CIR sent at the PIR rate. |
| be *<1-100000000>* | Set the Excess Burst size (BE). This is the burst allowed above the PIR sent at the maximum rate. |
| preference *<0-7>* | Set the preference for a class to receive spare bandwidth. Preference for the class to receive spare bandwidth (highest is 7). |
| queue-length *<2-65536>* | Set the maximum queue length. |
| set-dscp *<dscp-value>* | Set the DSCP value to apply to the packets. |
| red-curve *<red-curve-name>* | Apply a random early discard template with the class (only available on leaf queues when specifying class policy). If the keyword <default> is used then the default RED curve is applied. |
| sub-class-policy | Specify that the class will contain sub-classes. |
| htb | Sub-classes will use the Hierarchy Token Bucket (HTB) queueing discipline. |

**Default** BC and BE are assigned suitable values proportional to the CIR and PIR respectively, and are larger than the MTU. The PIR defaults to the CIR. The Preference defaults to 7 and the queue-length defaults to 1000 (if the class is a leaf). If the keyword <default> is used then the default RED curve is applied.

**Mode** Traffic-Control Policy for an HTB policy.

**Usage** If there is already a class in the same level that has the specified name, the command will replace the configuration of the existing class if it does not have any sub-classes.

If a sub-class policy is specified, this command uses the Traffic-Control Class mode to apply it.

**Examples** To configure a leaf class, use the commands:

```
awplus#configure terminal
awplus(config)#traffic-control
awplus(config-tc)#policy p01 htb
awplus(config-tc-policy)#class c01 cir 100mbit pir 150mbit
```

To configure a class with a sub-sub-class as the leaf class, use the commands:

```
awplus#configure terminal
awplus(config)#traffic-control
awplus(config-tc)#policy p01 htb
awplus(config-tc-policy)#class c01 cir 100mbit pir 150mbit
sub-class-policy htb
awplus(config-tc-class)#sub-class s01 cir 10mbit sub-sub-class
policy htb
awplus(config-tc-subclass)#sub-sub-class ss01 cir 5mbit
queue-length 200 red-curve ss01-red
```

To enter Traffic-Control Class mode for an existing class, use the commands:

```
awplus#configure terminal
awplus(config)#traffic-control
awplus(config-tc)#policy p01
awplus(config-tc-policy)#class c01
awplus(config-tc-class)#
```

To delete an existing class, use the commands:

```
awplus#configure terminal
awplus(config)#traffic-control
awplus(config-tc)#policy p01
awplus(config-tc-policy)#no class c01
```

**Related commands** policy (traffic-control)

sub-class (htb)

traffic-control

# class (priority)

**Overview** Use this command to configure a priority queue class within a traffic control policy.

Use the **no** variant of this command to delete an existing priority class under a current policy.

**Syntax**

```
class <class-name> [priority-level <0-15>] [max <max-rate>]
[queue-length <2-65536>] [set-dscp <dscp-value>] [red-curve
<red-curve-name>]
```

```
class <class-name> [priority-level <0-15>] sub-class-policy
{priority|wrr|htb}
```

```
no class <class-name>
```

| Parameter | Description |
|---|---|
| `<class-name>` | Name of the class. |
| `priority-level <0-15>` | Set the priority level (15 is the highest).<br>This parameter is compulsory when creating a new class. When editing an existing class, this parameter is optional. |
| `max <max-rate>` | Set the maximum traffic rate of the queue (in kbit/mbit/gbit per second, 1kbit-100gbit). |
| `queue-lenth <2-65535>` | Set the maximum queue length in packets (only available on leaf queues when specifying sub-class policy). |
| `set-dscp <dscp-value>` | Set the DSCP value to apply to the packets (only available on leaf queues when specifying sub-class policy). |
| `red-curve <red-curve-name>` | Apply a random early discard template with the class (only available on leaf queues when specifying class policy). If the keyword <default> is used then the default RED curve is applied. |
| `sub-class-policy` | Create a sub-class within the policy. |
| `priority` | Sub-classes use the Priority Queue scheduling algorithm. |
| `wrr` | Sub-classes use the Weighted Round Robin scheduling algorithm. |
| `htb` | Sub-classes use the Hierarchy Token Bucket scheduling algorithm. |

**Default** No priority class is applied. If the keyword <default> is used then the default RED curve is applied.

**Mode** Traffic Control Policy for a priority policy.

**Usage** If there is already a class in the same level with the specified name, the command will replace the configuration of the existing class if it does not have any sub-classes.

If a sub-class policy is specified, this command uses the Traffic-Control Class mode to apply it.

**Examples**

To configure a leaf class, use the commands:

```
awplus#configure terminal
awplus(config)#traffic-control
awplus(config-tc)#policy p01 priority
awplus(config-tc-policy)#class c01 priority-level 5
```

To configure a class with a sub-sub-class as the leaf class, use the commands:

```
awplus#configure terminal
awplus(config)#traffic-control
awplus(config-tc)#policy p01 priority
awplus(config-tc-policy)#class c01 priority-level 5
sub-class-policy priority
awplus(config-tc-class)#sub-class s01 priority-level 7
sub-sub-class-policy priority
awplus(config-tc-subclass)#sub-sub-class ss01 priority-level 3
max 5mbit queue-length 200 red-curve ss01-red
```

To enter Traffic-Control Class mode for an existing class, use the commands:

```
awplus#configure terminal
awplus(config)#traffic-control
awplus(config-tc)#policy p01
awplus(config-tc-policy)#class c01
awplus(config-tc-class)#
```

To delete an existing policy class, use the commands:

```
awplus#configure terminal
awplus(config)#traffic-control
awplus(config-tc)#policy p01
awplus(config-tc-policy)#no class c01
```

**Related commands**

policy (traffic-control)

sub-class (htb)

sub-class (wrr)

traffic-control

# class (wrr)

**Overview** Use this command to configure a Weighted Round-Robin (WRR) class within a traffic control policy.

Use the **no** variant of this command to delete an existing class under a current policy.

**Syntax**

```
class <class-name> [weight <1-100>] [queue-length <2-65536>]
[set-dscp <dscp-value>] [red-curve <red-curve-name>]
class <class-name> [weight <1-100>] sub-class-policy wrr
no class <class-name>
```

| Parameter | Description |
|---|---|
| `<class-name>` | Name of the class. |
| `weight <1-100>` | Set the weight.The relative weight is the available bandwidth divided between sibling WRR classes according to the ratio of their configured weights.<br>This parameter is compulsory when creating a new class. When editing an existing class, this parameter is optional. |
| `queue-length <2-65536>` | Set the maximum queue length in packets. |
| `set-dscp <dscp-value>` | Set the DSCP value to apply to packets. |
| `red-curve <red-curve-name>` | Apply a random early discard template with the class (only available on leaf queues when specifying class policy). If the keyword <default> is used then the default RED curve is applied. |
| `sub-class-policy` | Create a sub-class within the policy. |
| `wrr` | Sub-classes use the Weighted Round Robin queueing algorithm. |

**Default** A weighted round-robin class has no DSCP value or sub-class policy. The queue length is 1000 by default. If the keyword <default> is used then the default RED curve is applied.

**Mode** Traffic-Control Policy for a WRR policy.

**Usage** If there is already a class in the same level with the specified name, the command will replace the configuration of the existing class if it does not have any sub-classes.

If a sub-class policy is specified, this command uses the Traffic-Control Class mode to apply it.

**Examples**

To configure a leaf class, use the commands:

```
awplus#configure terminal
awplus(config)#traffic-control
awplus(config-tc)#policy p01 wrr
awplus(config-tc-policy)#class c01 weight 50
```

To configure a class with a sub-sub-class as the leaf class, use the commands:

```
awplus#configure terminal
awplus(config)#traffic-control
awplus(config-tc)#policy p01 wrr
awplus(config-tc-policy)#class c01 weight 50 sub-class-policy
wrr
awplus(config-tc-class)#sub-class s01 weight 30 sub-sub-class-
policy wrr
awplus(config-tc-subclass)#sub-sub-class ss01 weight 5
queue-length 200 red-curve ss01-red
```

To enter Traffic-Control Class mode for an existing class, use the commands:

```
awplus#configure terminal
awplus(config)#traffic-control
awplus(config-tc)#policy p01
awplus(config-tc-policy)#class c01
awplus(config-tc-class)#
```

To delete an existing class, use the commands:

```
awplus#configure terminal
awplus(config)#traffic-control
awplus(config-tc)#policy p01
awplus(config-tc-policy)#no class c01
```

**Related commands**

traffic-control

policy (traffic-control)

sub-class (wrr)

# debug traffic-control

**Overview**

Use this command to enable traffic-control debugging. This will cause additional detailed debugging information to be logged and available using the show debugging traffic-control.

Use the **no** variant of this command to disable traffic-control debugging.

**Syntax**

```
debug traffic-control
no debug traffic-control
```

**Default**

Disabled

**Mode**

Privileged Exec

**Examples**

To enable traffic control debugging, use the commands:

```
awplus#debug traffic-control
```

To disable traffic control debugging, use the commands:

```
awplus#no debug traffic-control
```

**Related commands**

traffic-control

show debugging traffic-control

# interface (traffic-control)

**Overview** Use this command to configure interface specific parameters for traffic control.

**Syntax**

```
interface <interface-name> {overhead
[<overhead-bytes>|ethernet]|virtual-bandwidth
<bandwidth>|system-bandwidth <system-percentage>}
```

| Parameter | Description |
|---|---|
| *<interface-name>* | Name of interface to configure |
| overhead | Set overhead to add to each packet when calculating the packet size |
| *<overhead-bytes>* | Number of bytes to add to the packet for packet size calculations. The range is from 0 to 512 and the default is 0. |
| ethernet | Setting the overhead to 'ethernet' adds 24 bytes to the packet to account for preamble + CRC + inter-frame gap. |
| virtual-bandwidth | Specify the virtual-bandwidth of the interface. This is the maximum amount of traffic that traffic control will allow to be sent via the interface.. |
| *<bandwidth>* | Value for the virtual bandwidth in kbit, mbit or gbits. For example 5mbit. |
| system-bandwidth | Specify the percentage of the interface bandwidth to reserve for system traffic. The default when a traffic control policy is applied to the interface is 5%. |
| *<system-percentage>* | Percentage of the bandwidth to reserve for system traffic in the range from 1 to 99. |

**Default** The default overhead is 0, the default bandwidth is the interface speed if it can be read. It is recommended to always set the virtual bandwidth when using traffic control. The system bandwidth default is 5%.

**Mode** Traffic-Control

**Usage** This command allows configuring traffic control parameters specific to the traffic egress interface.

**Examples** To rate limit eth1 to 10mbit while taking into account the ethernet framing overhead and reserving only 1% of the bandwidth for system traffic, use the commands:

```
awplus#configure terminal
awplus(config)#traffic-control
awplus(config-tc)#interface eth1 overhead ethernet
virtual-bandwidth 10mbit system-bandwidth 1
```

**Related commands** show running-config traffic-control

show traffic-control interface

# l3-filtering enable

**Overview**

Use this command to enable traffic control for bridged traffic on a bridge interface.

Use the **no** variant of this command to disable traffic control for bridged traffic on a bridge interface.

**Syntax**

```
l3-filtering enable
no l3-filtering enable
```

**Default**

Traffic control is disabled by default for bridged traffic.

**Mode**

Interface mode for a bridge interface

**Usage notes**

We do not recommend shaping bridged traffic on firewalls that are running Unified Threat Management (UTM) features, because both Traffic Control and UTM require significant CPU resources.

**Example**

To enable traffic control for bridged traffic on br1, use the commands:

```
awplus# configure terminal
awplus(config)# interface br1
awplus(config-if)# l3-filtering enable
```

**Related commands**

traffic-control

**Command changes**

Version 5.4.7-0.1: command added. Previously, traffic control was enabled by default on all bridge interfaces.

# move rule (traffic-control)

**Overview** Use this command to change the identification of an existing traffic control rule.

**Syntax**

```
move rule [<1-65535> to <1-65535>]
```

| Parameter | Description |
|---|---|
| *<1-65535>* | Range of the rule ID to move from |
| *<1-65535>* | Range of the destination ID for the rule to move to |

**Default** None

**Mode** Traffic-Control

**Example** To change rule ID 10 to rule ID 25, use the commands:

```
awplus#cofigure terminal
awplus(config)#traffic-control
awplus(config-tc)#move rule 10 to 25
```

**Related commands**

rule (traffic-control)

traffic-control

show traffic-control

show traffic-control rule

show traffic-control rule config-check

# policy (traffic-control)

**Overview**

Use this command to configure a traffic control policy, that can then be used with rules that have been created.

Use the **no** variant of this command to delete an existing policy.

**Syntax**

```
policy <policy-name> [priority|wrr|htb]
no policy <policy-name>
```

| Parameter | Description |
|---|---|
| *<policy_name>* | The name of the policy |
| `priority` | Use Priority Queueing (PQ) |
| `wrr` | Use Weighted Round Robin (WRR) |
| `htb` | Use Hierarchy Token Bucket (HTB) |

**Default**

No policies are configured

**Mode**

Traffic-Control

**Usage**

A policy specifies a top-level queueing discipline which determines the type of classes that can be configured under the policy. This command uses the Traffic-Control Policy mode.

**Examples**

To configure a policy, use the commands:

```
awplus#configure terminal
awplus(config)#traffic-control
awplus(config-tc)#policy p01 htb
awplus(config-tc-policy)#
```

To delete an existing policy, use the commands:

```
awplus#configure terminal
awplus(config)#traffic-control
awplus(config-tc)#no policy p01 htb
```

**Related commands**

class (htb)

class (priority)

class (wrr)

rule (traffic-control)

traffic-control

sub-class (htb)

sub-class (priority)

sub-class (wrr)

sub-sub-class (htb)

sub-sub-class (priority)

sub-sub-class (wrr)

# red-curve

**Overview** Use this command to allow configuration of a RED (Random Early Discard) curve template.

Use the **no** variant of this command to set the RED curve back to the default.

**Syntax**

```
red-curve <red-curve-name> [limit <4-127>] [avpkt <64-1518>]
[min <3-126>] [max <4-127>] [probabilty <1-100>]
[ecn [ecn-drop]]
```

```
no red-curve [<red-curve-name>]
```

| Parameter | Description |
|---|---|
| *<red-curve-name>* | The RED curve name. |
| `limit` *<4-127>* | The hard queue length limit (in packets) for the RED curve. Once the queue length reaches the limit, all packets are dropped. |
| `avpkt` *<64-1518>* | The average packet size to use for queue size calculations in bytes. |
| `min` *<3-126>* | The minimum queue length for random early discard (in packets). Between <min> and <max> the drop probability will increase linearly. |
| `max` *<4-127>* | The maximum queue length where packets are probabilistically dropped. At <max> the drop probability equals <probability>. Beyond <max> the drop or marking probability is 100%. |
| `probability` *<1-100>* | The probability of a packet being dropped when queue-length reaches <max>. The drop probability increases linearly from 0 to <probability> in between <min> and <max>. |
| `ecn` | Use explicit congestion notification marking instead of dropping the packet. |
| `ecn-drop` | When average queue size exceeds <max> drop packets instead of marking. |

**Default** The default RED curve is **red-curve default limit 127 avpkt 576B min 10 max 32 prob 2**.

**Mode** Traffic-control

**Usage notes** The RED curve template can later be applied to a traffic control class, sub-class, or sub-sub-class.

**Example** To configure a RED curve with ECN dropping and the default curve shape, use the commands:

```
awplus# configure terminal
awplus(config)# traffic-control
awplus(config-tc)# red-curve red-ecn ecn
```

To configure an aggressive RED curve, use the commands:

```
awplus# configure terminal
awplus(config)# traffic-control
awplus(config-tc)# red-curve aggressive min 5 max 50
probability 70
```

**Related commands**

class (htb)

class (priority)

class (wrr)

show traffic-control policy

show running-config traffic-control

show traffic-control red-curve

sub-class (htb)

sub-class (priority)

sub-class (wrr)

sub-sub-class (htb)

sub-sub-class (priority)

sub-sub-class (wrr)

# rule (traffic-control)

**Overview** Use this command to create a traffic-control rule.

Use the **no** variant of this command to remove a traffic-control rule

**Syntax**

```
rule [<1-65535>] match <application> from <source-entity> to
<destination-entity> policy <policy>
```

```
no rule [<1-65535>]
```

| Parameter | Description |
|---|---|
| *<1-65535>* | The rule ID is an integer in the range from 1 to 65535. If you do not designate a rule ID, one will be automatically generated and it will be greater than the current highest rule ID. Lower IDs have higher priority. |
| `match` | Application traffic to match |
| *<application>* | Application name |
| `from` | Set the source of the entity |
| *<source_entity>* | Source entiity name. Entities represent logical grouping of subnets, hosts or interfaces. |
| `to` | Set the destination of the entity |
| *<destination_entity>* | Source entiity name. Entities represent logical grouping of subnets, hosts or interfaces. |
| `policy` | Policy to apply to matched traffic |
| *<policy>* | Traffic control policy. This consists of a top-level policy name followed by the name of a class within that policy, and sub-class (of the class) and a sub-sub-calss if applicable. Examples are:<br>p01.c03<br>p01.c03.sc02<br>p01.c03.scc02.ssc01<br>P01 is the policy name, c03 is the class name,sc02 is the sub-class, and ssc01 is the sub-sub-class.. |

**Default** No rules

**Mode** Traffic-Control

**Usage** Rules are used to apply traffic-control policies to a type of traffic. When traffic control is enabled and no rules are added, a default traffic-control policy is installed on all supported interfaces.

If the application, source entity or destination entity specified in the rule is not configured correctly, the rule is not valid and is not installed.

You can change the rule order by using the move rule (traffic-control) command.

Rules are applied to destination interfaces in the order of their ID (lower IDs are applied first). If traffic matches a rule, then the rest are ignored. If traffic does not match any rule, then it is classified to the default class.

A rule can specify the system class as the policy. System traffic is high priority traffic that is allocated a fixed amount of bandwidth on an interface. Use the interface (traffic-control) command to configure system bandwidth on an interface.

## Examples

To configure a rule, use the commands:

```
awplus#configure terminal
awplus(config)#traffic-control
awplus(config-tc)#rule 10 match ftp from wan to private policy
p01.c02.sc03
```

To delete a rule, use the commands:

```
awplus#configure terminal
awplus(config)#traffic-control
awplus(config-tc)#no rule 10
```

## Related commands

interface (traffic-control)

move rule (traffic-control)

policy (traffic-control)

traffic-control

show running-config traffic-control

show traffic-control rule

# show debugging traffic-control

**Overview** Use this command to display the status of traffic control debugging

**Syntax** `show debugging traffic-control`

**Default** None

**Mode** Privileged Exec

**Example** To show if traffic-control debugging is on or off, run the command:

```
awplus#show debugging traffic-control
```

**Output** Figure 41-1: Example output from **show debugging traffic-control**

```
awplus#show debugging traffic-control
Traffic-control Debugging Status: off
```

**Related commands** debug traffic-control

show debugging

# show running-config traffic-control

**Overview** Use this command to display the current traffic control configuration.

**Syntax** `show running-config traffic-control`

**Default** None

**Mode** Privileged Exec

**Example** To show the traffic control configuration section of the running configuration, use the command:

```
awplus#show running-config traffic-control
```

**Output** Figure 41-2: Example output from **show running-config traffic-control**

```
awplus#show running-config traffic-control
traffic-control
 policy A wrr
  class B5001 weight 30
  class B5002 weight 60
 policy P priority
  class P10 priority-level 10 max 5mbit
  class P3 priority-level 3 max 8mbit sub-class-policy htb
   sub-class H cir 3mbit bc 100000
   sub-class I cir 5mbit bc 100000
  class P2 priority-level 2
 policy token-bucket htb
  class A cir 5mbit pir 6mbit preference 2
  class B cir 2mbit pir 4mbit bc 100000 be 100000 preference 3 sub-class-policy htb
   sub-class C cir 1mbit pir 4mbit bc 50000
   sub-class D cir 1mbit pir 4mbit bc 50000 sub-sub-class-policy htb
   sub-sub-class E cir 500kbit pir 4mbit bc 50000 set-dscp af23
   sub-sub-class F cir 500kbit pir 4mbit bc 50000 set-dscp af31
 rule 10 match udp-5001 from ipv6.vlan3 to ipv6.eth2 policy A.B5001
 rule 20 match udp-5002 from ipv6.vlan3 to ipv6.eth2 policy A.B5002
 rule 30 match udp-5001 from main.vlan to main.wan policy A.B5001
 rule 40 match udp-5002 from main.vlan to main.wan policy A.B5002
 rule 50 match udp-5002 from main.vlan to main.eth1 policy A.B5002
 interface eth2 virtual-bandwidth 2mbit overhead ethernet
 traffic-control enable
```

**Related commands**

interface (traffic-control)

show running-config

show traffic-control counters

show traffic-control interface

show traffic-control policy

show traffic-control rule

show traffic-control rule config-check

## traffic-control

# show traffic-control counters

**Overview** Use this command to display counters related to traffic control. This command displays counters for the number of packets sent, queued or dropped by each traffic control class. The information is shown by each interface. There is an overall counter for the policy, and counters for each leaf class in the policy.

If no interface name is specified then information for all interfaces with traffic control policies applied is displayed.

**Syntax** `show traffic-countrol counters [<interface-name>]`

| Parameter | Description |
|---|---|
| *<interface-name>* | Name of Interface to display traffic control counters |

**Default** None

**Mode** Privileged Exec

**Examples** To show the traffic control counters for all interfaces, use the commands:

```
awplus#show traffic-control counters
```

Figure 41-3: Example output from **show traffic-control counters**

```
awplus#show traffic-control counters
Traffic Control Counters
Interface eth1:
Class            Counter                Bytes              Packets
-----------------------------------------------------------------
A                Sent                       0                    0
                 Currently Queued           0                    0
                 Dropped                                         0

A.B5001          Sent                       0                    0
                 Currently Queued           0                    0
                 Dropped                                         0

A.B5002          Sent                       0                    0
                 Currently Queued           0                    0
                 Dropped                                         0

A.default        Sent                       0                    0
                 Currently Queued           0                    0
                 Dropped                                         0

system           Sent                       0                    0
                 Currently Queued           0                    0
                 Dropped                                         0
```

```
Interface eth2:
Class            Counter                 Bytes            Packets
-----------------------------------------------------------------
A                Sent                 58681224             232862
                 Currently Queued            0                383
                 Dropped                                  1039845

A.B5001          Sent                 10671444              42347
                 Currently Queued        32004                128
                 Dropped                                   164954

A.B5002          Sent                 17661924              70087
                 Currently Queued        32004                127
                 Dropped                                   123470

A.default        Sent                 30348360             120430
                 Currently Queued        32004                128
                 Dropped                                   751421
system           Sent                       42                  1
                 Currently Queued            0                  0
                 Dropped                                        0
```

**Related commands** show running-config traffic-control

# show traffic-control interface

**Overview** Use this command to display information about interfaces known to traffic control, such as the applied policy, the virtual-bandwidth configured on the interface, the bandwidth reserved for system traffic and the overhead applied to the packet size calculations. If no interface name is specified, information is shown for all interfaces known to traffic control.

**Syntax** `show traffic-control interface [<interface-name>]`

| Parameter | Description |
|---|---|
| *<interface-name>* | Name of interface to display information |

**Default** None

**Mode** Privileged Exec

**Examples** To show traffic control information for all interfaces, use the command:

```
awplus#show traffic-control interface
```

**Output** Figure 41-4: Example output from **show traffic-control interface**

```
awplus#show traffic-control interface
Traffic Control Interface Information

eth1:

Policy:                A
Virtual bandwidth:     Not set (optional)
System bandwidth:      5%
Packet overhead:       0 Bytes

eth2:
Policy:                A
Virtual bandwidth:     2000 kbit
System bandwidth:      5%
Packet overhead        24 Bytes (Ethernet transport layer)

vlan1:
Policy:                Default policy
Virtual bandwidth:     Not set (optional)
Packet overhead:       0 Bytes
```

```
vlan10:
Policy:                Default policy
Virtual bandwidth:     Not set (optional)
Packet overhead:       0 Bytes

vlan3:
Policy:                Default policy
Virtual bandwidth:     Not set (optional)
Packet overhead:       0 Bytes

vlan4:
Policy:                Default policy
Virtual bandwidth:     Not set (optional)
Packet overhead:       0 Bytes

vlan666:
Policy:                Default policy
Virtual bandwidth:     Not set (optional)
Packet overhead:       0 Bytes
```

**Related commands**

interface (traffic-control)

show running-config traffic-control

# show traffic-control policy

**Overview** Use this command to show information about the configured traffic control policies and classes. This command shows the configured traffic control policies and the interfaces that they are applied to. Only non-default configuration parameters are shown.

If no policy name is given, all configured policies are displayed.

**Syntax** `show traffic-control policy [<policy-name>]`

| Parameter | Description |
|---|---|
| *<policy-name>* | Name of policy to display |

**Default** None

**Mode** Privileged Exec

**Examples** To show all traffic control policies, use the command:

```
awplus#show traffic-control policy
```

**Output** Figure 41-5: Example output from **show traffic-control policy**

```
awplus#show traffic-control policy
Traffic Control Policies:
Policy A:
  Type:                     wrr
  Applied interfaces:       eth1 eth2
  Classes:
    Class B5001:
     Weight:                30
    Class B5002:
     Weight:                60
     Red curve:             default
Policy P:
  Type:                     priority
  Applied interfaces:       None
  Classes:
    Class P10:
     Priority:              10
     Peak rate (PIR):       5000kbit
    Class P3:
     Priority:              3
     Peak rate (PIR):       8000kbit
     Sub-queue type:        htb
     Red curve              TCP_session_1
```

```
    Class H:
     Committed rate (CIR):  3000kbit
     Burst (Bc):            100000B
    Class I:
     Committed rate (CIR):  5000kbit
     Burst (Bc):            100000B
    Class P2:
     Priority:              2
     Red curve:            TCP_session_2
Policy token-bucket:
  Type:                     htb
  Applied interfaces        None
  Classes:
    Class A:
     Committed rate (CIR):  5000kbit
     Peak rate (PIR):       6000kbit
     Preference:            2
    Class B:
     Committed rate (CIR):  2000kbit
     Peak rate (PIR):       4000kbit
     Burst (Bc):            100000B
     Excess Burst (Be):     100000B
     Preference:            3
     Sub-queue type:        htb
    Class C:
     Committed rate (CIR):  2000kbit
     Peak rate (PIR):       4000kbit
     Burst (BC):            50000B
    Class D:
     Committed rate (CIR):  1000kbit
     Peak rate (PIR):       4000kbit
     Burst (Bc):            50000B
     Sub-queue type:        htb
    Class E:
     Committed rate (CIR):  500kbit
     Peak rate (PIR):       4000kbit
     Burst (Bc):            50000B
     Set DSCP:              af23
    Class F:
     Committed rate (CIR):  500kbit
     Peak rate (PIR):       4000kbit
     Burst (Bc):            50000B
     Set DSCP:              af31
```

**Related commands**

show running-config

show running-config traffic-control

# show traffic-control red-curve

**Overview** Use this command to show configured RED curve templates.

**Syntax** `show traffic-control red-curve <red-curve-name>`

| Parameter | Description |
|---|---|
| *<red-curve-name>* | The name of the RED curve. The default RED curve is **red-curve default limit 127 avpkt 576B min 10 max 32 prob 2.** |

**Default** None

**Mode** Privileged Exec

**Usage notes** If you have not configured some parameters, default values will display. If no RED curve name is given, all configured RED curves are shown.

**Example** To show all RED curves, use the command:

```
awplus# show traffic-control red-curve
```

To show a specified red curve called "TCP_session_1", use the command:

```
awplus# show traffic-control red-curve TCP_session_1
```

**Output** Figure 41-6: Example output from **show traffic-control red-curve**

```
awplus#show traffic-control red-curve
Traffic Control RED Curves:

RED curve default:
 Average packet size: 576 bytes
 Minimum: 10 packets
 Maximum: 32 packets
 Limit: 127 packets
 Drop probability: 2%
 ECN marking: disabled

RED curve TCP_session_1:
 Average packet size: 576 bytes
 Minimum: 20 packets
 Maximum: 60 packets
 Limit: 127 packets
 Drop probability: 20%
 ECN marking: disabled
```

Figure 41-7: Example output from **show traffic-control red-curve TCP_session_1**

```
awplus#show traffic-control red-curve TCP_session_1
Traffic Control RED Curves
RED curve TCP_session_1:
Average packet size: 576 bytes
Minimum: 20 packets
Maximum: 60 packets
Limit: 127 packets
Drop probability: 20%
ECN marking: disabled
```

**Related commands**

red-curve

show running-config

show running-config traffic-control

show traffic-control policy

# show traffic-control rule config-check

**Overview** Use this command to show information about traffic control rule validity.

**Syntax** `show traffic-control rule config-check`

**Default** None

**Mode** Privileged Exec

**Usage** An asterisk is printed before each rule that is invalid. To help determine why the rule is invalid, the show traffic-control rule config-check command will print the reasons why the rule is invalid. Information is only shown for invalid rules. If all rules are valid, a message will be printed showing all rules are valid.

**Example** To check if configured rules are valid, use the commands:

```
awplus#show traffic-control rule config-check
```

**Output** Figure 41-8: Example output from **show traffic-control rule config-check**

```
awplus#show traffic-control rule config-check

Rule 30:
  "From" entity does not exist
  "To" entity does not exist
  Policy doesn't exist or is not leaf
```

**Related commands**

move rule (traffic-control)

rule (traffic-control)

show traffic-control rule

show running-config traffic-control

# show traffic-control rule

**Overview** Use this command to show specific rules or a complete list of rules configured for traffic control.

**Syntax**

```
show traffic-control rule [<1-65535>]
```

| Parameter | Description |
|---|---|
| *<1-65535>* | The ID of the rule you want to display. If no ID is entered, all rules are displayed. |

**Default** None

**Mode** Privileged Exec

**Usage** An asterisk will be printed at the start of a row if the rule is invalid. The rules are shown in a table showing the rule ID, the application, source and destination that the rule matches on and the policy and class that the matching traffic will be sent to.

**Examples** To show a list of all traffic control rules configured, use the command:

```
awplus#show traffic-control rule
```

To show traffic control rule 10 configured, use the command:

```
awplus#show traffic-control rule 10
```

**Output** Figure 41-9: Example output from **show traffic-control rule**

```
awplus#show traffic-control rule

[* - Rule is not valid - see "show traffic-control rule config-check"]
  ID      APP         From              To               Policy
-----------------------------------------------------------------
  10      udp-5001    ipv6.vlan3        ipv6.eth2        A.B5001
  20      udp-5002    ipv6.vlan3        ipv6.eth2        A.B5002
* 30      aserf       asdf              fasdf            sadf.asdf
```

**Related commands**

move rule (traffic-control)

rule (traffic-control)

show running-config traffic-control

show traffic-control

show traffic-control rule config-check

# show traffic-control

**Overview** Use this command to display a brief overview of the status of the traffic control information on the router.

**Syntax** `show traffic-control`

**Mode** Privileged Exec

**Usage** This command shows if traffic control is enabled, how many rules are configured and how many interfaces have a virtual bandwidth applied.

**Example** To show an overview of the status of the traffic control information, use the commands:

```
awplus# show traffic-control
```

**Output** Figure 41-10: Example output from **show traffic-control**

```
awplus#show traffic-control
Traffic control is enabled
Policy configured on 5 interfaces
2 rules configured (2 valid rules)
Virtual-bandwidth configured on 1 interfaces
```

**Related commands** traffic-control

traffic-control enable

# sub-class (htb)

**Overview** Use this command to configure a hierarchy token bucket (HTB) sub-class within an existing class.

Use the **no** variant of this command to delete an existing sub-class under the current class.

**Syntax**

```
sub-class <class-name> [cir <committed-rate>] [pir <peak-rate>]
[bc <1-100000000>] [be <1-100000000>] [preference <0-7>]
[queue-length <2-65536>] [set-dscp <dscp-value>] [red-curve
<red-curve-name>]
```

```
sub-class <class-name> [cir <committed-rate>] [pir <peak-rate>]
[bc <1-100000000>] [be <1-100000000>] [preference <0-7>]
sub-sub-class-policy htb
```

```
no sub-class <class-name>
```

| Parameter | Description |
|---|---|
| *<class-name>* | Name of the class. |
| cir *<committed-rate>* | Set the Committed Information Rate (CIR) for the queue. Specified in kbit/mbit/gbit per second, 1kbit-100gbit.<br>This parameter is compulsory when creating a new sub-class. When editing an existing sub-class, this parameter is optional. |
| pir *<peak-rate>* | Set the Peak Information Rate (PIR) for the queue. This is the rate of the queue under peak conditions. Specified in kbit/mbit/gbit per second, in the range 1kbit-100gbit. |
| bc *<1-100000000>* | Set the Committed Burst size (BC). This is the burst allowed above the CIR, sent at the PIR rate. |
| be *<1-100000000>* | Set the Excess Burst size (BE). This is the burst allowed above the PIR, sent at the maximum rate. |
| preference *<0-7>* | Set the preference for a class to receive spare bandwidth (highest is 7). |
| queue-length *<2-65536>* | Set the maximum queue length in packets. |
| set-dscp *<dscp-value>* | Set the DSCP value to apply to the packets. |
| red-curve *<red-curve-name>* | Apply a random early discard template with the sub-class and enter the name of the red curve template to apply. |
| sub-sub-class-policy | Specify that the sub-class will contain sub-sub-classes. |
| htb | Sub-sub-classes will use the Hierarchy Token Bucket (HTB) queueing discipline. |

**Default** BC and BE are assigned suitable values proportional to the CIR and PIR respectively and are larger that the MTU. PIR defaults to the CIR. Preference defaults to 7 and the queue length default to 1000 if the class is a leaf.

**Mode** Traffic-Control Class for an HTB sub-class policy.

**Usage**

If there is already a sub-class in the same level with the specified name, the command will replace the configuration of the existing sub class if it does not have any sub-sub-classes.

If you specify a sub-sub-class policy, this command puts you into sub-class mode so you can specify the sub-sub-class.

**Examples**

To configure a leaf sub-class, use the commands:

```
awplus#configure terminal
awplus(config)#traffic-control
awplus(config-tc)#policy p01 htb
awplus(config-tc-policy)#class c01 cir 100mbit pir 150mbit
sub-class-policy htb
wplus(config-tc-class)#sub-class s02 cir 20mbit queue-length
200 red-curve s02-red
```

To enter Traffic-Control Class mode for an existing sub-class, use the commands:

```
awplus#configure terminal
awplus(config)#traffic-control
awplus(config-tc)#policy p01
awplus(config-tc-policy)#class c01
awplus(config-tc-class)#sub-class s01
awplus(config-tc-subclass)#
```

To delete an existing sub-class, use the commands:

```
awplus#configure terminal
awplus(config)#traffic-control
awplus(config-tc)#policy p01
awplus(config-tc-policy)#class c01
awplus(config-tc-class)#no sub-class s01
```

**Related commands**

class (htb)

class (priority)

policy (traffic-control)

sub-sub-class (htb)

traffic-control

# sub-class (priority)

**Overview** Use this command to configure a priority queue sub-class within a class.

Use the **no** variant of this command to delete an existing sub-class under the current class.

**Syntax**

```
sub-class <class-name> [priority-level <0-15>] [max <max-rate>]
[queue-length <2-65536>] [set-dscp <dscp_value>] [red-curve
<red-curve-name>]
```

```
sub-class <class-name> [priority-level <0-15>]
sub-sub-class-policy {priority|wrr|htb}
```

```
no sub-class <class-name>
```

| Parameter | Description |
|---|---|
| `<class-name>` | Name of the class. |
| `priority-level <0-15>` | Set the priority level (15 is the highest).<br>This parameter is compulsory when creating a new sub-class. When editing an existing sub-class, this parameter is optional. |
| `max <max-rate>` | Set the maximum traffic rate of the queue (in kbit/mbit/gbit per second, 1kbit-100gbit). |
| `queue-length <2-65536>` | Set the maximum queue length in packets. |
| `set-dscp<dscp-value>` | Set the DSCP value to apply to the packets. |
| `red-curve <red-curve-name>` | Apply a random early discard template with the sub class and enter the name of the red curve template to apply. |
| `sub-sub-class-policy` | Create a sub-sub-class for the policy. |
| `priority` | Sub-sub-classes will use the Priority Queue queueing algorithm. |
| `wrr` | Sub-sub-classes will use the Weighted Round Robin (WRR) queueing algorithm. |
| `htb` | Sub-classes will use the Hierarchy Token Bucket (HTB) queueing algorithm. |

**Default** A priority queue sub class has no max rate, DSCP value or sub-sub class policy. The queue length is 1000 by default if the class is a leaf.

**Mode** Traffic-Control Class for a priority sub-class policy.

**Usage** If there is already a sub-class in the same level with the specified name, the command will replace the configuration of the existing sub class if it does not have any sub-sub classes.

If a sub-sub class policy is specified, this command uses the Traffic-Control Class mode to apply it.

**Examples**

To configure a sub-class as the leaf class, use the commands:

```
awplus#configure terminal
awplus(config)#traffic-control
awplus(config-tc)#policy p01 priority
awplus(config-tc-policy)#class c01 priority-level 5
sub-class-policy priority
awplus(config-tc-class)#sub-class s02 priority-level 8 max
50mbit queue-length 200 red-curve ss01-red
```

To enter Traffic-Control Class mode for an existing sub-class, use the commands:

```
awplus#configure terminal
awplus(config)#traffic-control
awplus(config-tc)#policy p01 priority
awplus(config-tc-policy)#class c01
awplus(config-tc-class)#sub-class s01
awplus(config-tc-subclass)#
```

To delete an existing class, use the commands:

```
awplus#configure terminal
awplus(config)#traffic-control
awplus(config-tc)#policy p01
awplus(config-tc-policy)#class c01
awplus(config-tc-class)#no sub-class s01
```

**Related commands**

class (priority)

policy (traffic-control)

sub-sub-class (htb)

sub-sub-class (priority)

sub-sub-class (wrr)

traffic-control

# sub-class (wrr)

**Overview** Use this command to configure a Weighted Round-Robin (WRR) sub-class within a class.

Use the **no** variant of this command to delete an existing sub-class under the current class.

**Syntax**

```
sub-class <class-name> [weight <1-100>] [queue-length
<2-65536>]  [set-dscp <dscp-value>] [red-curve
<red-curve-name>]
```

```
sub-class <class-name> [weight <1-100>] sub-sub-class-policy
wrr
```

```
no sub-class <class-name>
```

| Parameter | Description |
|---|---|
| *<class-name>* | Name of the sub-class. |
| weight*<1-100>* | Set the weight.The relative weight is the available bandwidth divided between sibling WRR classes according to the ratio of their configured weights.<br>This parameter is compulsory when creating a new sub-class. When editing an existing sub-class, this parameter is optional. |
| queue-length*<2-65536>* | Set the maximum queue length in packets. |
| set-dscp | Set the DSCP value to apply to packets. |
| *<dscp-value>* | DSCP value as an integer or lower-case DSCP name. |
| red curve *<red-curve-name>* | Apply a random early discard template with the sub-class and enter the name of the red curve template to apply. |
| sub-sub-class-policy | Create a sub-sub-class within the policy. |
| wrr | Sub sub classes use the Weighted Round Robin queueing discipline. |

**Default** A weighted round-robin sub class has no DSCP value or sub-sub-class policy. The queue length is 1000 by default.

**Mode** Traffic-Control Class for a WRR sub-class policy.

**Usage** If there is already a class in the same level with the specified name, the command will replace the configuration of the existing class if it does not have any sub-classes.

If a sub class policy is specified, this command uses the Traffic-Control Class mode to apply it.

**Examples**

To configure a sub-class as a leaf class, use the commands:

```
awplus#configure terminal
awplus(config)#traffic-control
awplus(config-tc)#policy p01 wrr
awplus(config-tc-policy)#class c02 weight 30 sub-class-policy
wrr
awplus(config-tc-class)#sub-class s02 weight 40 queue-length
200 red-curve s02-red
```

To enter Traffic-Control Class mode for an existing sub-class, use the commands:

```
awplus#configure terminal
awplus(config)#traffic-control
awplus(config-tc)#policy p01
awplus(config-tc-policy)#class c01
awplus(config-tc-class)#sub-class s01
awplus(config-tc-subclass)#
```

To delete an existing sub-class, use the commands:

```
awplus#configure terminal
awplus(config)#traffic-control
awplus(config-tc)#policy p01
awplus(config-tc-policy)#class c01
awplus(config-tc-class)#no sub-class s01
```

**Related commands**

class (priority)

class (wrr)

policy (traffic-control)

traffic-control

sub-sub-class (wrr)

# sub-sub-class (htb)

**Overview** Use this command to configure a Hierarchy Token Bucket (HTB) sub-sub-class for a sub-class.

Use the **no** variant of this command to delete an existing sub-sub-class from the current sub-class.

**Syntax**

```
sub-sub-class <class-name> [cir <committed-rate>] [pir
<peak-rate>] [bc <1-100000000>] [be <1-100000000>] [preference
<0-7>] [queue-length <2-65536>] [set-dscp <dscp-value>]
[red-curve <red-curve-name>]
```

```
no sub-sub-class <class-name>
```

| Parameter | Description |
|---|---|
| *<class-name>* | Name of the sub-sub-class. |
| cir *<committed-rate>* | Set the Committed Information Rate (CIR) for the queue. Specified in kbit/mbit/gbit per second, 1kbit-100gbit.<br>This parameter is compulsory when creating a new sub-sub-class. When editing an existing sub-sub-class, this parameter is optional. |
| pir *<peak-rate>* | Set the Peak Information Rate (PIR) for the queue. This is the rate of the queue under peak conditions. Specified in kbit/mbit/gbit per second, in the range 1kbit-100gbit. |
| bc *<1-100000000>* | Set the Committed Burst size (BC). This is the burst allowed above the CIR, sent at the PIR rate. |
| be *<1-100000000>* | Set the Excess Burst size (BE. This is the burst allowed above the PIR, sent at the maximum rate.. |
| preference *<0-7>* | Set the preference for a class to receive spare bandwidth (highest is 7). |
| queue-length *<2-65536>* | Set the maximum queue length. |
| set-dscp *<dscp-value>* | Set the DSCP value to apply to the packets. |
| red-curve *<red-curve-name>* | Apply a random early discard template with the sub-sub-class and enter the name of the red curve template to apply. |

**Default** BC and BE are assigned suitable values proportional to the CIR and PIR respectively and are larger than the MTU. PIR defaults to the CIR. Preference defaults to 7 and Queue length defaults to 1000.

**Mode** Traffic-Control Sub-class for an HTB sub-sub-class policy.

**Usage** If there is already a sub-sub-class in the same level with the specified name, this command will replace the configuration of the existing sub-sub-class.

**Examples**

To configure a sub-sub-class, use the commands:

```
awplus#configure terminal
awplus(config)#traffic-control
awplus(config-tc)#policy p01 htb
awplus(config-tc-policy)#class c01 cir 100mbit pir 150mbit
sub-class-policy htb
awplus(config-tc-class)#sub-class s01 cir 10mbit
```

To configure a leaf sub-sub-class with a RED curve, use the commands:

```
awplus#configure terminal
awplus(config)#traffic-control
awplus(config-tc)#policy p01 htb
awplus(config-tc-policy)#class c01 cir 100mbit pir 150mbit
sub-class-policy htb
awplus(config-tc-class)#sub-class s01 cir 10mbit
sub-sub-class-policy htb
awplus(config-tc-subclass)#sub-sub-class ss01 cir 5mbit
queue-length 200 red-curve ss01-red
```

To delete an existing sub-sub-class, use the commands:

```
awplus#configure terminal
awplus(config)#traffic-control
awplus(config-tc)#policy p01
awplus(config-tc-policy)#class c01
awplus(config-tc-class)#sub-class s01
awplus(config-tc-subclass)#no sub-sub-class ss01
```

**Related commands**

policy (traffic-control)

sub-class (htb)

sub-class (priority)

traffic-control

# sub-sub-class (priority)

**Overview** Use this command to configure a priority queue sub-sub-class for a sub-class.

Use the **no** variant of this command to delete an existing sub-sub-class from the current sub-class.

**Syntax**

```
sub-sub-class <class-name> [priority-level <0-15>] [max
<max-rate>] [queue-length <2-65536>] [set-dscp <dscp-value>]
[red-curve <red-curve-name>]
```

```
no sub-sub-class <class-name>
```

| Parameter | Description |
|---|---|
| `<class-name>` | Name of the class. |
| `priority-level <0-15>` | Set the priority level (15 is the highest).<br>This parameter is compulsory when creating a new sub-sub-class.<br>When editing an existing sub-sub-class, this parameter is optional. |
| `max <max-rate>` | Set the maximum traffic rate of the queue (in kbit/mbit/gbit per second, 1kbit-100gbit). |
| `queue-length <2-65536>` | Set the maximum queue length in packets. |
| `set-dscp <dscp-value>` | Set the DSCP value to apply to the packets. |
| `red-curve <red-curve-name>` | Apply a random early discard template with the sub-sub-class and enter the name of the red curve template to apply. |

**Default** A priority queue sub-sub-class has no max rate or DSCP value. The queue length is 1000.

**Mode** Traffic-Control Sub-class for a priority sub-sub-class policy.

**Usage** If there is already a sub-sub-class in the same level with the specified name, this command will replace the configuration of the existing sub-sub-class.

**Examples** To configure a sub-sub-class, use the commands:

```
awplus#configure terminal
awplus(config)#traffic-control
awplus(config-tc)#policy p01 priority
awplus(config-tc-policy)#class c01 priority-level 5
awplus(config-tc-class)#sub-class s01 priority-level 7
awplus(config-tc-subclass)#sub-sub-class ss01 priority-level 3
```

To configure a sub-sub-class with a RED curve, use the commands:

```
awplus#configure terminal
awplus(config)#traffic-control
awplus(config-tc)#policy p01 priority
awplus(config-tc-policy)#class c01 priority-level 5
sub-class-policy priority
awplus(config-tc-class)#sub-class s01 priority-level 7
sub-sub-class-policy priority
awplus(config-tc-subclass)#sub-sub-class ss01 priority-level 3
max 5mbit queue-length 200 red-curve ss01-red
```

To delete an existing sub-sub-class, use the commands:

```
awplus#configure terminal
awplus(config)#traffic-control
awplus(config-tc)#policy p01
awplus(config-tc-policy)#class c01
awplus(config-tc-class)#sub-class s01
awplus(config-tc-subclass)#no sub-sub-class ss01
```

**Related commands**

traffic-control

policy (traffic-control)

sub-class (priority)

# sub-sub-class (wrr)

**Overview** Use this command to configure a Weighted Round-Robin (WRR) sub-sub-class within a sub-class.

Use the **no** variant of this command to delete an existing sub-sub-class from the current sub-class.

**Syntax**

```
sub-sub-class <class-name> [weight <1-100>] [queue-length
<2-65536>] [set-dscp <dscp-value>] [red-curve <red-curve-name>]
```

```
no sub-sub-class <class-name>
```

| Parameter | Description |
|---|---|
| `<class-name>` | Name of the sub-class. |
| `weight <1-100>` | Set the weight.The relative weight is the available bandwidth divided between sibling WRR classes according to the ratio of their configured weights.<br>This parameter is compulsory when creating a new sub-sub-class. When editing an existing sub-sub-class, this parameter is optional. |
| `queue-length <2-65536>` | Set the maximum queue length in packets. |
| `set-dscp <dscp-value>` | Set the DSCP value to apply to packets. |
| `red-curve <red-curve-name>` | Apply a random early discard template with the sub-sub-class and enter the name of the red curve template to apply. |

**Default** A weighted round-robin sub-sub-class has no DSCP value. The queue length is 1000 by default.

**Mode** Traffic-Control Sub-class for a WRR sub-sub-class policy.

**Usage** If there is already a sub-sub-class in the same level with the specified name, this command will replace the configuration of the existing sub-sub-class.

**Examples** To configure a sub-sub-class as a leaf class, use the commands:

```
awplus#configure terminal
awplus(config)#traffic-control
awplus(config-tc)#policy p01 wrr
awplus(config-tc-policy)#class c01 weight 50 sub-class-policy
wrr
awplus(config-tc-class)#sub-class s01 weight 30 sub-sub-class
policy wrr
awplus(config-tc-subclass)#sub-sub-class ss01 weight 5
queue-length 200
```

To configure a sub-sub-class with a RED curve, use the commands:

```
awplus#configure terminal
awplus(config)#traffic-control
awplus(config-tc)#policy p01 wrr
awplus(config-tc-policy)#class c01 weight 50 sub-class-policy
wrr
awplus(config-tc-class)#sub-class s01 weight 30
sub-sub-class-policy wrr
awplus(config-tc-subclass)#sub-sub-class ss01 weight 5
queue-length 200 red-curve ss01-red
```

To delete an existing sub-sub-class, use the commands:

```
awplus#configure terminal
awplus(config)#traffic-control
awplus(config-tc)#policy p01 htb
awplus(config-tc-policy)#class c01
awplus(config-tc-class)#sub-class s01
awplus(config-tc-subclass)#no sub-sub-class ss01
```

**Related commands**

traffic-control

policy (traffic-control)

sub-class (priority)

sub-class (wrr)

# traffic-control enable

**Overview**

Use this command to enable traffic control.

Use the **no** variant of this command to disable traffic control without losing your existing traffic control configuration.

**Syntax**

```
traffic-control enable
no traffic-control enable
```

**Default**

Disabled

**Mode**

Traffic-Control

**Usage**

When traffic control is enabled and no rules are added, a default queueing discipline is applied to all interfaces that support traffic control. You can use the policy command to configure traffic control policies and the rule (traffic-control) command to apply the configured policies to the traffic.

**Examples**

To enable traffic control, use the commands:

```
awplus#configure terminal
awplus(config)#traffic-control
awplus(config-tc)#traffic-control enable
```

To disable traffic control, use the commands:

```
awplus#configure terminal
awplus(config)#traffic-control
awplus(config-tc)#no traffic-control enable
```

**Related commands**

policy (traffic-control)

rule (traffic-control)

traffic-control

# traffic-control

**Overview**

Use this command to enter into Traffic-Control configuration mode.

Use the **no** variant of this command to remove all traffic control configuration.

**Syntax**

```
traffic-control
no traffic-control
```

**Default**

Disabled

**Mode**

Global Configuration

**Usage**

This command enters you into Traffic-Control configuration mode.

In Traffic-Control Configuration mode you can:

- enable or disable traffic control
- create and delete traffic control policies
- create, move and delete rules for traffic control
- set and unset packet overhead, system bandwidth and virtual bandwidth of interfaces

**Examples**

To configure traffic-control, use the commands:

```
awplus#configure terminal
awplus(config)#traffic-control
awplus(config-tc)#
```

To remove all traffic control configuration, us the commands:

```
awplus#configure terminal
awplus(config)#no traffic-control
awplus(config)#
```

**Related commands**

class (htb)

class (priority)

class (wrr)

debug traffic-control

interface (traffic-control)

move rule (traffic-control)

policy (traffic-control)

rule (traffic-control)

traffic-control enable

show debugging traffic-control

show running-config traffic-control

show traffic-control

show traffic-control counters

show traffic-control interface

show traffic-control policy

show traffic-control rule

show traffic-control rule config-check

sub-class (htb)

sub-class (priority)

sub-class (wrr)

sub-sub-class (htb)

sub-sub-class (priority)

sub-sub-class (wrr)

# 42 802.1X Commands

## Introduction

**Overview**

802.1X is an IEEE standard providing a mechanism for authenticating devices attached to a LAN port or wireless device. Devices wishing to access services behind a port must authenticate themselves before any Ethernet packets are allowed to pass through. The protocol is referred to as 802.1X because it was initially defined in the IEEE standard 802.1X, published in 2001 and revised in 2004 and again as the current 802.1X 2010 standard.

The AR3050S supports 802.1X authentication with the following limitations:

- Only supported on the device's switch ports.
- Not supported on static channel-groups and dynamic (LACP) channel-groups.

This chapter provides an alphabetical reference of commands used to configure 802.1X port access control. For more information, see the AAA and Port Authentication_Feature Overview and Configuration Guide.

**Command List**


- "dot1x accounting" on page 2033
- "dot1x authentication" on page 2034
- "debug dot1x" on page 2035
- "dot1x control-direction" on page 2036
- "dot1x eap" on page 2038
- "dot1x eapol-version" on page 2039
- "dot1x initialize interface" on page 2040
- "dot1x initialize supplicant" on page 2041
- "dot1x keytransmit" on page 2042
- "dot1x max-auth-fail" on page 2043
- "dot1x max-reauth-req" on page 2045

- "dot1x port-control" on page 2047
- "dot1x timeout tx-period" on page 2049
- "show debugging dot1x" on page 2050
- "show dot1x" on page 2051
- "show dot1x diagnostics" on page 2054
- "show dot1x interface" on page 2056
- "show dot1x sessionstatistics" on page 2058
- "show dot1x statistics interface" on page 2059
- "show dot1x supplicant" on page 2060
- "show dot1x supplicant interface" on page 2062
- "undebug dot1x" on page 2064

# dot1x accounting

**Overview**

This command overrides the **default** RADIUS accounting method for IEEE 802.1X-based authentication on an interface by allowing you to apply a user-defined named method list.

Use the **no** variant of this command to remove the named list from the interface and apply the **default** method list.

**Syntax**

```
dot1x accounting {default|<list-name>}
no dot1x accounting
```

| Parameter | Description |
|---|---|
| `default` | Apply the default accounting method list |
| `<list-name>` | Apply the user-defined named list |

**Default**

The **default** method list is applied to an interface by default.

**Mode**

Interface Configuration for a switch port; or Authentication Profile mode.

**Example**

To apply the named list 'vlan10_acct' on the vlan10 interface, use the commands:

```
awplus# configure terminal
awplus(config)# interface vlan10
awplus(config-if)# dot1x accounting vlan10_acct
```

To remove the named list from the vlan10 interface and set the authentication method back to **default**, use the commands:

```
awplus# configure terminal
awplus(config)# interface vlan10
awplus(config-if)# no dot1x accounting
```

**Related commands**

aaa accounting dot1x

**Command changes**

Version 5.4.9-2.1: command added to AR2050V, AR3050S, and AR4050S

# dot1x authentication

**Overview**

This command overrides the **default** 802.1X-based authentication method on an interface by allowing you to apply a user-defined named list.

Use the **no** variant of this command to remove the named list from the interface and apply the **default** method.

**Syntax**

```
dot1x authentication {default|<list-name>}
no dot1x authentication
```

| Parameter | Description |
|---|---|
| *default* | Apply the default authentication method list |
| *<list-name>* | Apply the user-defined named list |

**Default**

The **default** method list is applied to an interface by default.

**Mode**

Interface Configuration for a switch port; or Authentication Profile mode.

**Example**

To apply the named list 'vlan10_auth' on the vlan10 interface, use the commands:

```
awplus# configure terminal
awplus(config)# interface vlan10
awplus(config-if)# dot1x authentication vlan10_auth
```

To remove the named list from the vlan10 interface and set the authentication method back to **default**, use the commands:

```
awplus# configure terminal
awplus(config)# interface vlan10
awplus(config-if)# no dot1x authentication
```

**Related commands**

aaa authentication dot1x

**Command changes**

Version 5.4.9-2.1: command added to AR2050V, AR3050S, and AR4050S

# debug dot1x

**Overview**

Use this command to enable 802.1X IEEE Port-Based Network Access Control troubleshooting functions.

Use the **no** variant of this command to disable this function.

**Syntax**

```
debug dot1x [all|auth-web|event|nsm|packet|timer]
no debug all dot1x
no debug dot1x [all|auth-web|event|nsm|packet|timer]
```

| Parameter | Description |
|---|---|
| `all` | Used with the **no** variant of this command exclusively; turns off all debugging for 802.1X. |
| `auth-web` | Specifies debugging for 802.1X auth-web information. |
| `events` | Specifies debugging for 802.1X events. |
| `nsm` | Specifies debugging for NSM messages. |
| `packet` | Specifies debugging for 802.1X packets. |
| `timer` | Specifies debugging for 802.1X timers. |

**Mode**

Privileged Exec and Global Configuration

**Usage notes**

This command turns on a mode where trace-level information is output during authentication conversations. Be aware that this is a very verbose output. It is mostly useful to capture this as part of escalating an issue to ATI support.

**Examples**

Use this command without any parameters to turn on normal 802.1X debug information.

```
awplus# debug dot1x
awplus# show debugging dot1x
```

```
802.1X debugging status:
  802.1X events debugging is
  802.1X timer debugging is on
  802.1X packets debugging is on
  802.1X NSM debugging is on
```

**Related commands**

show debugging dot1x

undebug dot1x

**Command changes**

Version 5.4.9-2.1: command added to AR2050V, AR3050S, and AR4050S

# dot1x control-direction

**Overview** This command sets the direction of the filter for the unauthorized interface.

If the optional **in** parameter is specified with this command then packets entering the specified port are discarded. The **in** parameter discards the ingress packets received from the supplicant.

If the optional **both** parameter is specified with this command then packets entering (ingress) and leaving (egress) the specified port are discarded. The **both** parameter discards the packets received from the supplicant and sent to the supplicant.

The **no** variant of this command sets the direction of the filter to **both**. The port will then discard both ingress and egress traffic.

**Syntax**

```
dot1x control-direction {in|both}
no dot1x control-direction
```

| Parameter | Description |
|---|---|
| in | Discard received packets from the supplicant (ingress packets). |
| both | Discard received packets from the supplicant (ingress packets) and transmitted packets to the supplicant (egress packets). |

**Default** The authentication port direction is set to **both** by default.

**Mode** Interface Configuration for a switch port; or Authentication Profile mode.

**Examples** To set the port direction to the default (**both**) for port1.0.2, use the commands:

```
awplus# configure terminal
awplus(config)# interface port1.0.2
awplus(config-if)# no dot1x control-direction
```

To set the port direction to **in** for port1.0.2, use the commands:

```
awplus# configure terminal
awplus(config)# interface port1.0.2
awplus(config-if)# dot1x control-direction in
```

To set the port direction to **in** for authentication profile 'student', use the commands:

```
awplus# configure terminal
awplus(config)# auth profile student
awplus(config-auth-profile)# dot1x control-direction in
```

**Related commands**

auth profile (global)

show dot1x

show dot1x interface

show auth interface

**Command changes**

Version 5.4.9-2.1: command added to AR2050V, AR3050S, and AR4050S

# dot1x eap

**Overview** This command selects the transmit mode for the EAP packet. If the authentication feature is not enabled then EAP transmit mode is not enabled. The default setting discards EAP packets.

**Syntax**

```
dot1x eap {discard|forward|forward-untagged-vlan|forward-vlan}
```

| Parameter | Description |
|---|---|
| `discard` | Discard. |
| `forward` | Forward to all ports on the switch. |
| `forward-untagged-vlan` | Forward to ports with the same untagged VLAN. |
| `forward-vlan` | Forward to ports with the same VLAN. |

**Default** The transmit mode is set to `discard` EAP packets by default.

**Mode** Global Configuration

**Examples** To set the transmit mode of EAP packet to **forward**, to forward EAP packets to all ports on the switch, use the commands:

```
awplus# configure terminal
awplus(config)# dot1x eap forward
```

To set the transmit mode of EAP packet to **discard**, to discard EAP packets, use the commands:

```
awplus# configure terminal
awplus(config)# dot1x eap discard
```

To set the transmit mode of EAP packet to **forward-untagged-vlan**, to forward EAP packets to ports with the same untagged VLAN, use the commands:

```
awplus# configure terminal
awplus(config)# dot1x eap forward-untagged-vlan
```

To set the transmit mode of EAP packet to **forward-vlan**, to forward EAP packets to ports with the same VLAN, use the commands:

```
awplus# configure terminal
awplus(config)# dot1x eap forward-vlan
```

**Command changes** Version 5.4.9-2.1: command added to AR2050V, AR3050S, and AR4050S

# dot1x eapol-version

**Overview**

This command sets the EAPOL protocol version for EAP packets when 802.1X port authentication is applied.

Use the **no** variant of this command to set the EAPOL protocol version to 1.

The default EAPOL protocol version is version 1.

**Syntax**

```
dot1x eapol-version {1|2}
no dot1x eapol-version
```

| Parameter | Description |
|---|---|
| 1 \| 2 | EAPOL protocol version 1 or 2. |

**Default**

The EAP version for 802.1X authentication is set to 1 by default.

**Mode**

Interface Configuration for a switch port; or Authentication Profile mode.

**Examples**

To set the EAPOL protocol version to 2 for port1.0.2, use the commands:

```
awplus# configure terminal
awplus(config)# interface port1.0.2
awplus(config-if)# dot1x eapol-version 2
```

To set the EAPOL protocol version to the default version (1) for interface port1.0.2, use the commands:

```
awplus# configure terminal
awplus(config)# interface port1.0.2
awplus(config-if)# no dot1x eapol-version
```

To set the EAPOL protocol version to 2 for authentication profile 'student', use the commands:

```
awplus# configure terminal
awplus(config)# auth profile student
awplus(config-auth-profile)# dot1x eapol-version 2
```

**Validation Commands**

auth profile (global)

show dot1x

show dot1x interface

**Command changes**

Version 5.4.9-2.1: command added to AR2050V, AR3050S, and AR4050S

# dot1x initialize interface

**Overview**

This command removes authorization for a specified connected interface. The connection will attempt to re-authorize when the specified port attempts to make use of the network connection.

***NOTE:*** *Reauthentication could be a long time after the use of this command because the reauthorization attempt is not triggered by this command. The attempt is triggered by the first packet from the interface trying to access the network resources.*

**Syntax**

```
dot1x initialize interface <interface-list>
```

| Parameter | Description |
|---|---|
| *<interface-list>* | The interfaces or ports to configure. An interface-list can be:<br>• a VLAN (e.g. vlan2)<br>• a switchport (e.g. port1.0.4)<br>• a continuous range of interfaces separated by a hyphen (e.g. port1.0.1-port1.0.3)<br>• a comma-separated list (e.g. port1.0.1, port1.0.3-port1.0.4). Do not mix interface types in a list.<br>The specified interfaces must exist. |

**Mode**

Privileged Exec

**Examples**

To initialize 802.1X port authentication on the interface port1.0.2, use the command:

```
awplus# dot1x initialize interface port1.0.2
```

To unauthorize switch port1.0.2 and attempt reauthentication on switch port1.0.2, use the command:

```
awplus# dot1x initialize interface port1.0.2
```

To unauthorize all switch ports for a 18-port device and attempt reauthentication, use the command:

```
awplus# dot1x initialize interface port1.0.1-port1.0.18
```

**Related commands**

dot1x initialize supplicant

show dot1x

show dot1x interface

**Command changes**

Version 5.4.9-2.1: command added to AR2050V, AR3050S, and AR4050S

# dot1x initialize supplicant

**Overview**

This command removes authorization for a connected supplicant with the specified MAC address or username. The connection will attempt to re-authorize when the specified supplicant attempts to make use of the network connection.

***NOTE:*** *Reauthentication could be a long time after the use of this command because the reauthorization attempt is not triggered by this command. The attempt is triggered by the first packet from the supplicant trying to access the network resources.*

**Syntax**

```
dot1x initialize supplicant {<macadd>|username}
```

| Parameter | Description |
|---|---|
| `dot1x` | IEEE 802.1X Port-Based Access Control. |
| `initialize` | Initialize the port to attempt reauthentication. |
| `supplicant` | Specify the supplicant to initialize. |
| *<macadd>* | MAC (hardware address of the supplicant. |
| `username` | The name of the supplicant entry. |

**Mode**

Privileged Exec

**Example**

To initialize the supplicant authentication, use the commands

```
awplus# configure terminal
awplus(config)# dot1x initialize supplicant 0090.99ab.a020
awplus(config)# dot1x initialize supplicant guest
```

**Related commands**

dot1x initialize interface

show dot1x

show dot1x supplicant

**Command changes**

Version 5.4.9-2.1: command added to AR2050V, AR3050S, and AR4050S

# dot1x keytransmit

**Overview**

Use this command to enable key transmission on the interface specified previously in Interface mode.

This command enables key transmission over an Extensible Authentication Protocol (EAP) packet between the authenticator and supplicant.

The **no** variant of this command disables key transmission on the interface specified.

**Syntax**

```
dot1x keytransmit
no dot1x keytransmit
```

**Default**

Key transmission for port authentication is disabled by default.

**Mode**

Interface Configuration for a switch port; or Authentication Profile mode.

**Examples**

To enable the key transmit feature on interface port1.0.2, use the commands:

```
awplus# configure terminal
awplus(config)# interface port1.0.2
awplus(config-if)# dot1x keytransmit
```

To disable the key transmit feature on interface port1.0.2, use the commands:

```
awplus# configure terminal
awplus(config)# interface port1.0.2
awplus(config-if)# no dot1x keytransmit
```

**Related commands**

show dot1x

show dot1x interface

**Command changes**

Version 5.4.9-2.1: command added to AR2050V, AR3050S, and AR4050S

# dot1x max-auth-fail

**Overview**

Use this command to configure the maximum number of login attempts for a supplicant (client device) using the **auth-fail vlan** feature, when using 802.1X port authentication on an interface.

The **no** variant of this command resets the maximum login attempts for a supplicant (client device) using the auth-fail vlan feature, to the default configuration of 3 login attempts.

**Syntax**

```
dot1x max-auth-fail <0-10>
no dot1x max-auth-fail
```

| Parameter | Description |
|---|---|
| *<0-10>* | Specify the maximum number of login attempts for supplicants on an interface using 802.1X port authentication. |

**Default**

The default maximum number of login attempts for a supplicant on an interface using 802.1X port authentication is 3 login attempts.

**Mode**

Interface Configuration for a switch port; or Authentication Profile mode.

**Usage notes**

This command sets the maximum number of login attempts for supplicants on an interface. The supplicant is moved to the auth-fail VLAN from the Guest VLAN after the number of failed login attempts using 802.1X authentication is equal to the number set with this command.

See the AAA and Port Authentication Feature Overview and Configuration Guide for information about:

- the auth-fail VLAN feature, and
- restrictions regarding combinations of authentication enhancements working together

**Examples**

To configure the maximum number of login attempts for a supplicant on interface port1.0.2 to a single login attempt, use the commands:

```
awplus# configure terminal
awplus(config)# interface port1.0.2
awplus(config-if)# dot1x max-auth-fail 1
```

To configure the maximum number of login attempts for a supplicant on interface port1.0.2 to the default number of 3 login attempts, use the commands:

```
awplus# configure terminal
awplus(config)# interface port1.0.2
awplus(config-if)# no dot1x max-auth-fail
```

To configure the maximum number of login attempts for a supplicant on authentication profile 'student' to a single login attempt, use the commands:

```
awplus# configure terminal
awplus(config)# auth profile student
awplus(config-auth-profile)# dot1x max-auth-fail 1
```

**Related commands**

auth auth-fail vlan

auth profile (global)

dot1x max-reauth-req

show dot1x interface

**Command changes**

Version 5.4.9-2.1: command added to AR2050V, AR3050S, and AR4050S

# dot1x max-reauth-req

**Overview**

Use this command to set the number of reauthentication attempts before an interface is unauthorized.

The **no** variant of this command resets the reauthentication delay to the default.

**Syntax**

```
dot1x max-reauth-req <1-10>
no dot1x max-reauth-req
```

| Parameter | Description |
|---|---|
| *<1-10>* | Specify the maximum number of reauthentication attempts for supplicants on an interface using 802.1X port authentication. |

**Default**

The default maximum reauthentication attempts for interfaces using 802.1X port authentication is two (2) reauthentication attempts, before an interface is unauthorized.

**Mode**

Interface Configuration for a switch port; or Authentication Profile mode.

**Usage notes**

Use this command to set the maximum reauthentication attempts after failure.

**Examples**

To configure the maximum number of reauthentication attempts for interface port1.0.2 to a single (1) reauthentication request, use the commands:

```
awplus# configure terminal
awplus(config)# interface port1.0.2
awplus(config-if)# dot1x max-reauth-req 1
```

To configure the maximum number of reauthentication attempts for interface port1.0.2 to the default maximum number of two (2) reauthentication attempts, use the commands:

```
awplus(config)# interface port1.0.2
awplus(config-if)# no dot1x max-reauth-req
```

To configure the maximum number of reauthentication attempts for authentication profile 'student' to a single (1) reauthentication request, use the commands:

```
awplus# configure terminal
awplus(config)# auth profile student
awplus(config-auth-profile)# dot1x max-reauth-req 1
```

**Related commands**

auth profile (global)

dot1x max-auth-fail

show dot1x interface

**Command changes** Version 5.4.9-2.1: command added to AR2050V, AR3050S, and AR4050S

# dot1x port-control

**Overview** This command enables 802.1X port authentication on the interface specified, and sets the control of the authentication port.

The **no** variant of this command disables the port authentication on the interface specified.

**Syntax**

```
dot1x port-control {force-unauthorized|force-authorized|auto}
no dot1x port-control
```

| Parameter | Description |
|---|---|
| `force-unauthorized` | Force the port state to unauthorized.<br>Specify this to force a port to always be in an unauthorized state. |
| `force-authorized` | Force the port state to authorized.<br>Specify this to force a port to always be in an authorized state. |
| `auto` | Allow the port client to negotiate authentication.<br>Specify this to enable authentication on the port. |

**Default** 802.1X port control is disabled by default.

**Mode** Interface Configuration for a switch port; or Authentication Profile mode.

**Usage notes** Use this command to force a port state.

When **port-control** is set to **auto**, the 802.1X authentication feature is executed on the interface, but only if the **aaa authentication dot1x** command has been issued.

If you attempt to change the authentication configuration on an interface that has threat protection quarantine configured, you will see the following error message:

```
% portx.x.x: Application Proxy quarantine configuration must be
removed before port authentication is changed
```

Before changing the interface's authentication configuration you must either:

- remove the interface's threat protection configuration, or
- shut down the interface.

**Examples** To enable port authentication on the interface port1.0.2, use the commands:

```
awplus# configure terminal
awplus(config)# interface port1.0.2
awplus(config-if)# dot1x port-control auto
```

To enable port authentication force authorized on the interface port1.0.2, use the commands:

```
awplus# configure terminal
awplus(config)# interface port1.0.2
awplus(config-if)# dot1x port-control force-authorized
```

To disable port authentication on the interface port1.0.2 use the commands:

```
awplus# configure terminal
awplus(config)# interface port1.0.2
awplus(config-if)# no dot1x port-control
```

To enable port authentication on authentication profile 'student', use the commands:

```
awplus# configure terminal
awplus(config)# auth profile student
awplus(config-auth-profile)# dot1x port-control auto
```

**Related commands**

aaa authentication dot1x

auth profile (global)

show dot1x interface

**Command changes**

Version 5.4.9-2.1: command added to AR2050V, AR3050S, and AR4050S

# dot1x timeout tx-period

**Overview**

This command sets the transmit timeout for the authentication request on the specified interface.

The **no** variant of this command resets the transmit timeout period to the default (30 seconds).

**Syntax**

```
dot1x timeout tx-period <1-65535>
no dot1x timeout tx-period
```

| Parameter | Description |
|---|---|
| *<1-65535>* | Seconds. |

**Default**

The default transmit period for port authentication is 30 seconds.

**Mode**

Interface Configuration for a switch port; or Authentication Profile mode.

**Usage notes**

Use this command to set the interval between successive attempts to request an ID.

**Examples**

To set the transmit timeout period to 5 seconds on interface port1.0.2, use the commands:

```
awplus# configure terminal
awplus(config)# interface port1.0.2
awplus(config-if)# dot1x timeout tx-period 5
```

To reset transmit timeout period to the default (30 seconds) on interface port1.0.2, use the commands:

```
awplus# configure terminal
awplus(config)# interface port1.0.2
awplus(config-if)# no dot1x timeout tx-period
```

To set the transmit timeout period to 5 seconds on authentication profile 'student', use the commands:

```
awplus# configure terminal
awplus(config)# auth profile student
awplus(config-auth-profile)# dot1x timeout tx-period 5
```

**Related commands**

auth profile (global)

show dot1x

show dot1x interface

**Command changes**

Version 5.4.9-2.1: command added to AR2050V, AR3050S, and AR4050S

# show debugging dot1x

**Overview**

Use this command to see what debugging is turned on for 802.1X.

For information on filtering and saving command output, see the "Getting Started with AlliedWare Plus" Feature Overview and Configuration Guide.

**Syntax**

```
show debugging dot1x
```

**Mode**

User Exec and Privileged Exec

**Example**

To enable 802.1X debugging and display the debugging option set, use the following commands:

```
awplus# debug dot1x
awplus# show debugging dot1x
```

```
802.1X debugging status:
  802.1X events debugging is on
  802.1X timer debugging is on
  802.1X packets debugging is on
  802.1X NSM debugging is on
```

**Related commands**

debug dot1x

**Command changes**

Version 5.4.9-2.1: command added to AR2050V, AR3050S, and AR4050S

# show dot1x

**Overview** Use this command to show authentication information for 802.1X port authentication.

If you specify the optional **all** parameter then this command also displays all authentication information for each port available on the switch.

For information on filtering and saving command output, see the "Getting Started with AlliedWare_Plus" Feature Overview and Configuration Guide.

**Syntax** `show dot1x [all]`

| Parameter | Description |
|---|---|
| `all` | Displays all authentication information for each port available on the switch. |

**Mode** Privileged Exec

**Example** `awplus# show dot1x all`

**Table 1:** Example output from the **show dot1x all** command

```
awplus# show dot1x all
802.1X Port-Based Authentication Enabled
RADIUS server address: 150.87.18.89:1812
Next radius message id: 5
RADIUS client address: not configured
Authentication info for interface port1.0.2
portEnabled: true - portControl: Auto
portStatus: Authorized
reAuthenticate: disabled
reAuthPeriod: 3600
PAE: quietPeriod: 60 - maxReauthReq: 2 - txPeriod: 30
PAE: connectTimeout: 30
BE: suppTimeout: 30 - serverTimeout: 30
CD: adminControlledDirections: in
KT: keyTxEnabled: false
critical: disabled
guestVlan: disabled
dynamicVlanCreation: single-dynamic-vlan
multiVlanSession: disabled
assignFailActionRule: deny
hostMode: multi-supplicant
    maxsupplicant: 1024
```

**Table 1:** Example output from the **show dot1x all** command (cont.)

```
dot1x: enabled
protocolVersion: 1
authMac: enabled
method: PAP
reauthRelearning: disabled
authWeb: enabled
method: PAP
lockCount: 3
packetForwarding: disabled
twoStepAuthentication:
    configured: enabled
    actual: enabled
SupplicantMac: none
supplicantMac: none
Supplicant name: manager
Supplicant address: 00d0.59ab.7037
   authenticationMethod: 802.1X Authentication
   portStatus: Authorized - currentId: 1
   abort:F fail:F start:F timeout:F success:T
   PAE: state: Authenticated - portMode: Auto
   PAE: reAuthCount: 0 - rxRespId: 0
   PAE: quietPeriod: 60 - maxReauthReq: 2 - txPeriod: 30
   BE: state: Idle - reqCount: 0 - idFromServer: 0
   CD: adminControlledDirections: in - operControlledDirections: in
   CD: bridgeDetected: false
   KR: rxKey: false
   KT: keyAvailable: false - keyTxEnabled: false
   criticalState: off
   dynamicVlanId: 2
802.1X statistics for interface port1.0.2
   EAPOL Frames Rx: 5 - EAPOL Frames Tx: 16
   EAPOL Start Frames Rx: 0 - EAPOL Logoff Frames Rx: 0
   EAP Rsp/Id Frames Rx: 3 - EAP Response Frames Rx: 2
   EAP Req/Id Frames Tx: 8 - EAP Request Frames Tx: 2
   Invalid EAPOL Frames Rx: 0 - EAP Length Error Frames Rx: 0
   EAPOL Last Frame Version Rx: 1 - EAPOL Last Frame Src:  00d0.59ab.7037
Authentication session statistics for interface port1.0.2
   session user name: manager
   session authentication method: Remote server
   session time: 19440 secs
   session terminate cause: Not terminated yet
Authentication Diagnostics for interface port1.0.2
   Supplicant address: 00d0.59ab.7037
   authEnterConnecting: 2
   authEaplogoffWhileConnecting: 1
   authEnterAuthenticating: 2
   authSuccessWhileAuthenticating: 1
   authTimeoutWhileAuthenticating: 1
   authFailWhileAuthenticating: 0
   authEapstartWhileAuthenticating: 0
```

**Table 1:** Example output from the **show dot1x all** command (cont.)

```
    authEaplogoggWhileAuthenticating: 0
    authReauthsWhileAuthenticated: 0
    authEapstartWhileAuthenticated: 0
    authEaplogoffWhileAuthenticated: 0
    BackendResponses: 2
    BackendAccessChallenges: 1
    BackendOtherrequestToSupplicant: 3
    BackendAuthSuccess: 1
    BackendAuthFails: 0
```

**Command changes** Version 5.4.9-2.1: command added to AR2050V, AR3050S, and AR4050S

# show dot1x diagnostics

**Overview** This command shows 802.1X authentication diagnostics for the specified interface (optional).

If no interface is specified then authentication diagnostics are shown for all interfaces.

For information on filtering and saving command output, see the "Getting Started with AlliedWare Plus" Feature Overview and Configuration Guide.

**Syntax** `show dot1x diagnostics [interface <interface-list>]`

| Parameter | Description |
|---|---|
| `interface` | Specify a port to show. |
| `<interface-list>` | The interfaces or ports to configure. An interface-list can be:<br>• a VLAN (e.g. vlan2)<br>• a switchport (e.g. port1.0.4)<br>• a continuous range of interfaces separated by a hyphen (e.g. port1.0.1-port1.0.3)<br>• a comma-separated list (e.g. port1.0.1, port1.0.3-port1.0.4). Do not mix interface types in a list.<br>The specified interfaces must exist. |

**Mode** Privileged Exec

**Example** See the sample output below showing 802.1X authentication diagnostics for port1.0.2:

```
awplus# show dot1x diagnostics interface port1.0.2
```

**Output** Figure 42-1: Example output from the **show dot1x diagnostics** command

```
Authentication Diagnostics for interface port1.0.2
   Supplicant address: 00d0.59ab.7037
      authEnterConnecting: 2
      authEaplogoffWhileConnecting: 1
      authEnterAuthenticating: 2
      authSuccessWhileAuthenticating: 1
      authTimeoutWhileAuthenticating: 1
      authFailWhileAuthenticating: 0
      authEapstartWhileAuthenticating: 0
      authEaplogoggWhileAuthenticating: 0
      authReauthsWhileAuthenticated: 0
      authEapstartWhileAuthenticated: 0
      authEaplogoffWhileAuthenticated: 0
      BackendResponses: 2
      BackendAccessChallenges: 1
      BackendOtherrequestToSupplicant: 3
      BackendAuthSuccess: 1
```

**Command changes** Version 5.4.9-2.1: command added to AR2050V, AR3050S, and AR4050S

# show dot1x interface

**Overview** Use this command to show the status of 802.1X port-based authentication on the specified interface.

For information on filtering and saving command output, see the "Getting Started with AlliedWare_Plus" Feature Overview and Configuration Guide.

**Syntax**

```
show dot1x interface <interface-list>
```

| Parameter | Description |
|---|---|
| *<interface-list>* | The interfaces to display information about. An interface-list can be:<br>• a VLAN (e.g. vlan2)<br>• a switchport (e.g. port1.0.4)<br>• a continuous range of interfaces separated by a hyphen (e.g. port1.0.1-port1.0.3)<br>• a comma-separated list (e.g. port1.0.1, port1.0.3-port1.0.4). Do not mix interface types in a list. |

**Mode** Privileged Exec

**Examples** See the sample output below showing 802.1X authentication status for port1.0.2:

```
awplus# show dot1x interface port1.0.2
```

**Table 2:** Example output from the **show dot1x interface** command for a port

```
awplus#show dot1x interface port1.0.2
Authentication info for interface port1.0.2
   portEnabled: true - portControl: Auto
   portStatus: Authorized
   reAuthenticate: disabled
   reAuthPeriod: 3600
   PAE: quietPeriod: 60 - maxReauthReq: 2 - txPeriod: 30
   PAE: connectTimeout: 30
   BE: suppTimeout: 30 - serverTimeout: 30
   CD: adminControlledDirections: in
   KT: keyTxEnabled: false
   critical: disabled
   guestVlan: disabled
   dynamicVlanCreation: single-dynamic-vlan
       assignFailActionRule: deny
   multiVlanSession: disabled
   hostMode: multi-supplicant
        maxsupplicant: 1024
   dot1x: enabled
protocolVersion: 1
authMac: enabled
method: PAP
reauthRelearning: disabled
authWeb: enabled
method: PAP
lockCount: 3
packetForwarding: disabled
    twoStepAuthentication:
       configured: enabled
       actual: enabled
supplicantMac: none
```

**Related commands**

show auth diagnostics

show dot1x sessionstatistics

show dot1x statistics interface

show dot1x supplicant interface

**Command changes**

Version 5.4.9-2.1: command added to AR2050V, AR3050S, and AR4050S

# show dot1x sessionstatistics

**Overview** This command shows authentication session statistics for the specified interface, which may be a static channel (or static aggregator) or a dynamic (or LACP) channel group or a switch port.

For information on filtering and saving command output, see the "Getting Started with AlliedWare Plus" Feature Overview and Configuration Guide.

**Syntax**

```
show dot1x sessionstatistics [interface <interface-list>]
```

| Parameter | Description |
|---|---|
| `interface` | Specify a port to show. |
| `<interface-list>` | The interfaces to display information about. An interface-list can be:<br>• a VLAN (e.g. vlan2)<br>• a switchport (e.g. port1.0.4)<br>• a continuous range of interfaces separated by a hyphen (e.g. port1.0.1-port1.0.3)<br>• a comma-separated list (e.g. port1.0.1, port1.0.3-port1.0.4). Do not mix interface types in a list. |

**Mode** Privileged Exec

**Example** See sample output below showing 802.1X authentication session statistics for port1.0.2:

```
awplus# show dot1x sessionstatistics interface port1.0.2
```

```
Authentication session statistics for interface port1.0.2
   session user name: manager
      session authentication method: Remote server
      session time: 19440 secs
      session terminat cause: Not terminated yet
```

**Command changes** Version 5.4.9-2.1: command added to AR2050V, AR3050S, and AR4050S

# show dot1x statistics interface

**Overview** Use this command to show the authentication statistics for the specified interface.

For information on filtering and saving command output, see the "Getting Started with AlliedWare Plus" Feature Overview and Configuration Guide.

The output from this command is the same as the output from the show auth statistics interface command.

**Syntax**

```
show dot1x statistics interface <interface-list>
```

| Parameter | Description |
|---|---|
| *<interface-list>* | The interfaces to display information about. An interface-list can be:<br>• a VLAN (e.g. vlan2)<br>• a switchport (e.g. port1.0.4)<br>• a continuous range of interfaces separated by a hyphen (e.g. port1.0.1-port1.0.3)<br>• a comma-separated list (e.g. port1.0.1, port1.0.3-port1.0.4). Do not mix interface types in a list. |

**Mode** Privileged Exec

**Example** To display 802.1X authentication statistics for port1.0.2, use the command:

```
awplus# show dot1x statistics interface port1.0.2
```

**Output** Figure 42-2: Example output from **show dot1x statistics interface** for a port

```
awplus# show dot1x statistics interface port1.0.2
802.1X statistics for interface port1.0.2
   EAPOL Frames Rx: 5 - EAPOL Frames Tx: 16
   EAPOL Start Frames Rx: 0 - EAPOL Logoff Frames Rx: 0
   EAP Rsp/Id Frames Rx: 3 - EAP Response Frames Rx: 2
   EAP Req/Id Frames Tx: 8 - EAP Request Frames Tx: 2
   Invalid EAPOL Frames Rx: 0 - EAP Length Error Frames Rx: 0
   EAPOL Last Frame Version Rx: 1 - EAPOL Last Frame
Src:00d0.59ab.7037
```

**Command changes** Version 5.4.9-2.1: command added to AR2050V, AR3050S, and AR4050S

# show dot1x supplicant

**Overview** This command shows the supplicant state of the authentication mode set for the switch.

This command shows a summary when the optional **brief** parameter is used.

For information on filtering and saving command output, see the "Getting Started with AlliedWare_Plus" Feature Overview and Configuration Guide.

**Syntax**

```
show dot1x supplicant [<macadd>] [brief]
```

| Parameter | Description |
|---|---|
| *<macadd>* | MAC (hardware) address of the Supplicant. |
| `brief` | Brief summary of the Supplicant state. |

**Mode** Privileged Exec

**Example** See sample output below showing the 802.1X authenticated supplicant on the switch:

```
awplus# show dot1x supplicant
```

```
authenticationMethod: dot1x
totalSupplicantNum: 1
authorizedSupplicantNum: 1
macBasedAuthenticationSupplicantNum: 0
dot1xAuthenticationSupplicantNum: 1
webBasedAuthenticationSupplicantNum: 0
Supplicant name: manager
Supplicant address: 00d0.59ab.7037
   authenticationMethod: dot1x
    Two-Step Authentication:
      firstAuthentication: Pass - Method: mac
      secondAuthentication: Pass - Method: dot1x
portStatus: Authorized - currentId: 4
abort:F fail:F start:F timeout:F success:T
PAE: state: Authenticated - portMode: Auto
PAE: reAuthCount: 0 - rxRespId: 0
PAE: quietPeriod: 60 - maxReauthReq: 2 - txPeriod: 30
BE: state: Idle - reqCount: 0 - idFromServer: 3
BE: suppTimeout: 30 - serverTimeout: 30
CD: adminControlledDirections: in - operControlledDirections: in
CD: bridgeDetected: false
KR: rxKey: false
KT: keyAvailable: false - keyTxEnabled: false
RADIUS server group (auth): radius
RADIUS server (auth): 192.168.1.40
```

See sample output below showing the supplicant on the switch using the **brief** parameter:

```
awplus# show dot1x supplicant 00d0.59ab.7037 brief
```

```
Interface port1.0.2
   authenticationMethod: dot1x
   totalSupplicantNum: 1
   authorizedSupplicantNum: 1
      macBasedAuthenticationSupplicantNum: 0
      dot1xAuthenticationSupplicantNum: 1
      webBasedAuthenticationSupplicantNum: 0
Interface   VID Mode MAC Address      Status         IP Address      Username
==========  === ==== ===============  =============  ===============  ========
port1.0.2   2   D    00d0.59ab.7037   Authenticated  192.168.2.201   manager
```

See sample output below showing the supplicant on the switch using the **brief** parameter:

```
awplus# show dot1x supplicant brief
```

For example, if two-step authentication is configured with 802.1X authentication as the first method and web authentication as the second method then the output is as follows:

```
Interface port1.0.2  authenticationMethod: dot1x/web
  Two-Step Authentication
    firstMethod: dot1x
    secondMethod: web
  totalSupplicantNum: 1
  authorizedSupplicantNum: 1
    macBasedAuthenticationSupplicantNum: 0
    dot1xAuthenticationSupplicantNum: 0
    webBasedAuthenticationSupplicantNum: 1
    otherAuthenticationSupplicantNum: 0

Interface   VID  Mode MAC Address    Status            IP Address      Username
=========== ==== ==== ============== ================= =============== ========
port1.0.2   5    W    0008.0d5e.c216 Authenticated     192.168.1.200   web
```

**Related commands**

show dot1x supplicant interface

**Command changes**

Version 5.4.9-2.1: command added to AR2050V, AR3050S, and AR4050S

# show dot1x supplicant interface

**Overview** Use this command to show the supplicant state of the authentication mode set for the interface.

This command shows a summary when the optional **brief** parameter is used.

For information on filtering and saving command output, see the "Getting Started with AlliedWare_Plus" Feature Overview and Configuration Guide.

**Syntax**

```
show dot1x supplicant interface <interface-list> [brief]
```

| Parameter | Description |
|---|---|
| `<interface-list>` | The interfaces to display information about. An interface-list can be:<br>• a VLAN (e.g. vlan2)<br>• a switchport (e.g. port1.0.4)<br>• a continuous range of interfaces separated by a hyphen (e.g. port1.0.1-port1.0.3)<br>• a comma-separated list (e.g. port1.0.1, port1.0.3-port1.0.4). Do not mix interface types in a list. |
| `brief` | Brief summary of the Supplicant state. |

**Mode** Privileged Exec

**Examples** See sample output below showing the supplicant on the interface port1.0.2:

```
awplus# show dot1x supplicant interface port1.0.2
```

```
Interface port1.0.2
 authenticationMethod: dot1x
  totalSupplicantNum: 1
 authorizedSupplicantNum: 1
   macBasedAuthenticationSupplicantNum: 0
   dot1xAuthenticationSupplicantNum: 1
   webBasedAuthenticationSupplicantNum: 0
   otherAuthenticationSupplicantNum: 0

 Supplicant name: VCSPCVLAN10
 Supplicant address: 0000.cd07.7b60
   authenticationMethod: 802.1X
 Two-Step Authentication:
   firstAuthentication: Pass - Method: mac
   secondAuthentication: Pass - Method: dot1x
   portStatus: Authorized - currentId: 3
   abort:F fail:F start:F timeout:F success:T
   PAE: state: Authenticated - portMode: Auto
   PAE: reAuthCount: 0 - rxRespId: 0
   PAE: quietPeriod: 60 - maxReauthReq: 2
   BE: state: Idle - reqCount: 0 - idFromServer: 2
   CD: adminControlledDirections:in -
operControlledDirections:in
   CD: bridgeDetected: false
   KR: rxKey: false
   KT: keyAvailable: false - keyTxEnabled: false
```

See sample output below showing the supplicant on the switch using the **brief** parameter:

```
awplus# show dot1x supplicant interface port1.0.2 brief
```

```
Interface port1.0.2
   authenticationMethod: dot1x
Two-Step Authentication:
   firstMethod: mac
   secondMethod: dot1x
totalSupplicantNum: 1
authorizedSupplicantNum: 1
macBasedAuthenticationSupplicantNum: 0
dot1xAuthenticationSupplicantNum: 1
webBasedAuthenticationSupplicantNum: 0

Interface    VID  Mode MAC Address     Status          IP Address      Username
=========    ===  ==== ===========     ======          ==========      ========
port1.0.2    2    D    00d0.59ab.7037  Authenticated   192.168.2.201   manager
```

**Related commands** show dot1x supplicant

**Command changes** Version 5.4.9-2.1: command added to AR2050V, AR3050S, and AR4050S

# undebug dot1x

**Overview** This command applies the functionality of the **no** variant of the debug dot1x command.

# 43 Authentication Commands

## Introduction

**Overview**

Port authentication commands enable you to specify three different types of device authentication: 802.1X authentication, web authentication, and MAC authentication.

- 802.1X is an IEEE standard providing a mechanism for authenticating devices attached to a LAN port or wireless device.
- Web authentication is applicable to devices that have a human user who opens the web browser and types in a user name and password when requested.
- MAC authentication is used to authenticate devices that have neither a human user nor implement 802.1X supplicant when making a network connection request.

The AR3050S supports port authentication with the following limitations:

- MAC authentication is supported on the device's switch ports static channel-groups and dynamic (LACP) channel-groups.
- 802.1X authentication is supported on the device's switch ports only. It is not supported on static channel-groups and dynamic (LACP) channel-groups.
- Web authentication is supported on the device's Eth interfaces only.

This chapter provides an alphabetical reference for MAC and web authentication commands. For a list of 802.1X commands see the 802.1X Commands chapter.

For more information on configuring and using port authentication, see the AAA and Port Authentication Feature Overview and Configuration Guide.

**Command List**


- "auth auth-fail vlan" on page 2069
- "auth critical" on page 2071
- "auth dhcp-framed-ip-lease" on page 2072
- "auth dynamic-vlan-creation" on page 2074

- "auth guest-vlan" on page 2076
- "auth guest-vlan forward" on page 2078
- "auth host-mode" on page 2080
- "auth log" on page 2082
- "auth max-supplicant" on page 2084
- "auth multi-vlan-session" on page 2086
- "auth priority" on page 2087
- "auth profile (global)" on page 2089
- "auth profile (interface)" on page 2090
- "auth reauthentication" on page 2091
- "auth roaming disconnected" on page 2092
- "auth roaming enable" on page 2094
- "auth supplicant-ip" on page 2096
- "auth supplicant-mac" on page 2098
- "auth timeout connect-timeout" on page 2101
- "auth timeout quiet-period" on page 2103
- "auth timeout reauth-period" on page 2104
- "auth timeout server-timeout" on page 2106
- "auth timeout supp-timeout" on page 2108
- "auth two-step enable" on page 2109
- "auth two-step order" on page 2111
- "auth-mac accounting" on page 2113
- "auth-mac authentication" on page 2114
- "auth-mac enable" on page 2115
- "auth-mac method" on page 2117
- "auth-mac password" on page 2119
- "auth-mac reauth-relearning" on page 2120
- "auth-mac static" on page 2121
- "auth-mac username" on page 2122
- "auth-web accounting" on page 2123
- "auth-web authentication" on page 2124
- "auth-web enable" on page 2125
- "auth-web forward" on page 2127
- "auth-web idle-timeout enable" on page 2130
- "auth-web idle-timeout timeout" on page 2131

- "auth-web max-auth-fail" on page 2132
- "auth-web method" on page 2134
- "auth-web-server dhcp ipaddress" on page 2135
- "auth-web-server dhcp lease" on page 2136
- "auth-web-server dhcp-wpad-option" on page 2137
- "auth-web-server host-name" on page 2138
- "auth-web-server intercept-port" on page 2139
- "auth-web-server ipaddress" on page 2140
- "auth-web-server page language" on page 2141
- "auth-web-server login-url" on page 2142
- "auth-web-server page logo" on page 2143
- "auth-web-server page sub-title" on page 2144
- "auth-web-server page success-message" on page 2145
- "auth-web-server page title" on page 2146
- "auth-web-server page welcome-message" on page 2147
- "auth-web-server ping-poll enable" on page 2148
- "auth-web-server ping-poll failcount" on page 2149
- "auth-web-server ping-poll interval" on page 2150
- "auth-web-server ping-poll reauth-timer-refresh" on page 2151
- "auth-web-server ping-poll timeout" on page 2152
- "auth-web-server port" on page 2153
- "auth-web-server redirect-delay-time" on page 2154
- "auth-web-server redirect-url" on page 2155
- "auth-web-server session-keep" on page 2156
- "auth-web-server ssl" on page 2157
- "auth-web-server ssl intercept-port" on page 2158
- "copy proxy-autoconfig-file" on page 2159
- "copy web-auth-https-file" on page 2160
- "description (auth-profile)" on page 2161
- "erase proxy-autoconfig-file" on page 2162
- "erase web-auth-https-file" on page 2163
- "show auth" on page 2164
- "show auth diagnostics" on page 2165
- "show auth interface" on page 2166
- "show auth sessionstatistics" on page 2168

- "show auth statistics interface" on page 2169
- "show auth supplicant" on page 2170
- "show auth supplicant interface" on page 2173
- "show auth two-step supplicant brief" on page 2174
- "show auth-web-server" on page 2176
- "show auth-web-server page" on page 2177
- "show proxy-autoconfig-file" on page 2178

# auth auth-fail vlan

**Overview** Use this command to enable the **auth-fail vlan** feature on the specified vlan interface. This feature assigns supplicants (client devices) to the specified VLAN if they fail port authentication.

Use the **no** variant of this command to disable the auth-fail vlan feature for a specified VLAN interface.

**Syntax**

```
auth auth-fail vlan <1-4094>
no auth auth-fail vlan
```

| Parameter | Description |
|---|---|
| *<1-4094>* | Assigns the VLAN ID to any supplicants that have failed port authentication. |

**Default** The auth-fail vlan feature is disabled by default.

**Mode** Interface Configuration for a static channel, a dynamic (LACP) channel group, or a switch port; or Authentication Profile mode.

**Usage notes** Use the auth-fail vlan feature when using web authentication instead of the Guest VLAN feature, when you need to separate networks where one supplicant (client device) requires authentication and another supplicant does not require authentication from the same interface.

This is because the DHCP lease time using the Web-Authentication feature is shorter, and the auth-fail vlan feature enables assignment to a different VLAN if a supplicant fails authentication.

To enable the auth-fail vlan feature with web authentication, you need to set the web authentication server virtual IP address by using the auth-web-server ipaddress command or the auth-web-server dhcp ipaddress command.

When using 802.1X port authentication, use a dot1x max-auth-fail command to set the maximum number of login attempts. Three login attempts are allowed by default for 802.1X port authentication before supplicants trying to authenticate are moved from the Guest VLAN to the auth-fail VLAN. See the dot1x max-auth-fail on page 2043 for command information.

See the AAA and Port Authentication Feature Overview and Configuration Guide for information about:

- the auth-fail VLAN feature, which allows the Network Administrator to separate the supplicants who attempted authentication, but failed, from the supplicants who did not attempt authentication, and
- restrictions regarding combinations of authentication enhancements working together

**Examples**

To enable the auth-fail vlan feature for port1.0.2 and assign VLAN 100, use the following commands:

```
awplus# configure terminal
awplus(config)# interface port1.0.2
awplus(config-if)# auth auth-fail vlan 100
```

To disable the auth-fail vlan feature for port1.0.2, use the following commands:

```
awplus# configure terminal
awplus(config)# interface port1.0.2
awplus(config-if)# no auth auth-fail vlan
```

**Related commands**

auth profile (global)

dot1x max-auth-fail

show dot1x

show dot1x interface

show running-config

**Command changes**

Version 5.4.9-2.1: command added to AR2050V, AR3050S, and AR4050S

# auth critical

**Overview**

Use this command to enable the critical port feature on the interface. When the critical port feature is enabled on an interface, and all the RADIUS servers are unavailable, then the interface becomes authorized.

The **no** variant of this command disables the critical port feature on the interface.

**Syntax**

```
auth critical
no auth critical
```

**Default**

The critical port of port authentication is disabled.

**Mode**

auth-web: Interface Configuration for an Eth interface, or Authentication Profile mode.
auth-mac: Interface Configuration for a static channel, a dynamic (LACP) channel group, or a switch port; or Authentication Profile mode.
dot1x: Interface Configuration for a a switch port; or Authentication Profile mode.

**Examples**

To enable the critical port feature on interface eth1, use the following commands:

```
awplus# configure terminal
awplus(config)# interface eth1
awplus(config-if)# auth critical
```

To disable the critical port feature on interface eth1, use the following commands:

```
awplus# configure terminal
awplus(config)# interface eth1
awplus(config-if)# no auth critical
```

To enable the critical port feature on authentication profile 'student', use the commands:

```
awplus# configure terminal
awplus(config)# auth profile student
awplus(config-auth-profile)# auth critical
```

**Related commands**

auth profile (global)

show auth-web-server

show dot1x

show dot1x interface

show running-config

# auth dhcp-framed-ip-lease

**Overview** Use this command to enable DHCP Framed IP Lease on an interface.

When the DHCP Framed IP Lease feature is enabled on an interface, supplicants authenticated using 802.1x or MAC authentication will be assigned a specific IP address, and other network settings, gathered from the RADIUS server during the authentication process.

Use the **no** variant of this command to disable DHCP Framed IP Lease.

**Syntax**

```
auth dhcp-framed-ip-lease
no auth dhcp-framed-ip-lease
```

**Default** DHCP Framed IP Lease is disabled by default.

**Mode** Interface Configuration for a static channel, a dynamic (LACP) channel group, or a switch port; or Authentication Profile mode.

**Usage notes** You need to complete the following steps to configure the DHCP Framed IP Lease feature on your network.

**On the RADIUS server**:

- Configure the RADIUS server with the username and password for 802.1x or MAC authentication
- Configure the following 'framed' RADIUS attributes on the RADIUS server for the that user:
  - Framed-IP-Address (8): the IPv4 address for the supplicant
  - Framed-IP-Netmask (9): the netmask for the supplicant
  - Framed-Route (22): the default gateway IPv4 address for the supplicant
  - Session-Timeout (27): IP address lease time for the supplicant

***NOTE:*** *The Frame-IP-Address (8) attribute must be configured for this feature to work. All other attributes are optional.*

**On the DHCP server**:

- Configure the RADIUS client
- Enable 802.1x or MAC authentication on the required interface/s
- Enable DHCP Framed IP Lease feature on the required interface/s
- Setup a DHCP pool with the network range for the IP address/es registered on the RADIUS server
- Enable DHCP server

For more information, see the AAA and Port Authentication Feature Overview and Configuration Guide.

**Example**

To enable DHCP Framed IP Lease on port1.0.1, use the commands:

```
awplus# configure terminal
awplus(config)# interface port1.0.1
awplus(config-if)# auth dhcp-framed-ip-lease
```

To disable DHCP Framed IP Lease on port1.0.1, use the commands:

```
awplus# configure terminal
awplus(config)# interface port1.0.1
awplus(config-if)# no auth dhcp-framed-ip-lease
```

**Related commands**

show dot1x supplicant

show ip dhcp pool

**Command changes**

Version 5.4.8-2.1: command added

# auth dynamic-vlan-creation

**Overview** Use this command to enable and disable the Dynamic VLAN assignment feature.

The Dynamic VLAN assignment feature allows a supplicant (client device) to be placed into a specific VLAN based on information returned from the RADIUS server during authentication, on a given interface.

Use the **no** variant of this command to disable the Dynamic VLAN assignment feature.

**Syntax**

```
auth dynamic-vlan-creation [rule {deny|permit}]
no auth dynamic-vlan-creation
```

| Parameter | Description |
|---|---|
| `rule` | VLAN assignment rule. |
| `deny` | Deny a differently assigned VLAN ID. This is the default rule. |
| `permit` | Permit a differently assigned VLAN ID. |

**Default** By default, the Dynamic VLAN assignment feature is disabled.

**Mode** Interface Configuration for a static channel, a dynamic (LACP) channel group, or a switch port; or Authentication Profile mode.

**Usage notes** If the Dynamic VLAN assignment feature is enabled (disabled by default), VLAN assignment is dynamic. If the Dynamic VLAN assignment feature is disabled then RADIUS attributes are ignored and configured VLANs are assigned to ports.

The optional **rule** parameter specifies the VLAN assignment rule when the second supplicant's VLAN ID is different from VLAN ID from the first supplicant. If the **deny** value is applied with the command then the second supplicant with a different VLAN ID is rejected. If the **permit** value is applied with the command then the second supplicant with a different VLAN ID is accepted and assigned to the first supplicant's VLAN.

If you issue an **auth dynamic-vlan-creation** command without a **rule** parameter then a second supplicant with a different VLAN ID is rejected. It is not assigned to the first supplicant's VLAN. Issuing an **auth dynamic-vlan-creation** command without a **rule** parameter has the same effect as issuing an **auth dynamic-vlan-creation rule deny** command rejecting supplicants with differing VIDs.

**Examples**

To enable the Dynamic VLAN assignment feature on interface port1.0.2, use the commands:

```
awplus# configure terminal
awplus(config)# interface port1.0.2
awplus(config-if)# switchport access vlan 10
awplus(config-if)# auth-web enable
awplus(config-if)# auth dynamic-vlan-creation
awplus(config-if)# interface vlan10
awplus(config-if)# ip address 10.1.1.1/24
```

To enable the Dynamic VLAN assignment feature with Web Authentication on interface port1.0.2 when Web Authentication is needed, use the commands:

```
awplus# configure terminal
awplus(config)# auth-web-server ipaddress 1.2.3.4
awplus(config)# access-list hardware acl-web send-to-cpu ip any
1.2.3.4
awplus(config)# interface port1.0.2
awplus(config-if)# auth-web enable
awplus(config-if)# auth dynamic-vlan-creation
awplus(config-if)# access-group acl-web
awplus(config-if)# interface vlan1
awplus(config-if)# ip address 10.1.1.1/24
```

To disable the Dynamic VLAN assignment feature on interface port1.0.2, use the commands:

```
awplus# configure terminal
awplus(config)# interface port1.0.2
awplus(config-if)# no auth dynamic-vlan-creation
```

To enable the Dynamic VLAN assignment feature on authentication profile 'student', use the commands:

```
awplus# configure terminal
awplus(config)# auth profile student
awplus(config-auth-profile)# auth dynamic-vlan-creation
```

**Related commands**

auth profile (global)

auth host-mode

show dot1x

show dot1x interface

show running-config

**Command changes**

Version 5.4.9-2.1: command added to AR2050V, AR3050S, and AR4050S

# auth guest-vlan

**Overview** Use this command to enable and configure the Guest VLAN feature on the interface specified by associating a Guest VLAN with an interface. This command does not start authentication. The supplicant's (client device's) traffic is associated with the native VLAN of the interface unless it is already associated with another VLAN. The **routing** option enables routing from the Guest VLAN to another VLAN, so the switch can lease DHCP addresses and accept access to a limited network.

The **no** variant of this command disables the guest VLAN feature on the interface specified.

**Syntax**

```
auth guest-vlan <1-4094> [routing]
no auth guest-vlan [routing]
```

| Parameter | Description |
|---|---|
| *<1-4094>* | VLAN ID (VID). |
| `routing` | Enables routing from the Guest VLAN to other VLANs. |

**Default** The Guest VLAN authentication feature is disabled by default.

**Mode** Interface Configuration for a static channel, a dynamic (LACP) channel group, or a switch port; or Authentication Profile mode.

**Usage notes** The Guest VLAN feature may be used by supplicants (client devices) that have not attempted authentication, or have failed the authentication process. Note that if a port is in multi-supplicant mode with per-port dynamic VLAN configuration, after the first successful authentication, subsequent hosts cannot use the guest VLAN due to the change in VLAN ID. This may be avoided by using per-user dynamic VLAN assignment.

When using the Guest VLAN feature with the multi-host mode, a number of supplicants can communicate via a guest VLAN before authentication. A supplicant's traffic is associated with the native VLAN of the specified switch port. The supplicant must belong to a VLAN before traffic from the supplicant can be associated.

Note that you must enable 802.1X on the port and define a VLAN using the vlan command before you can configure it as a guest VLAN.

Note that Guest VLAN can use only untagged ports.

See the AAA and Port Authentication Feature Overview and Configuration Guide for information about:

- Guest VLAN, and
- restrictions regarding combinations of authentication enhancements working together

**Examples**

To define vlan100 and assign the guest VLAN feature to vlan100 on interface port1.0.2, and enable routing from the guest VLAN to other VLANs, use the following commands:

```
awplus# configure terminal
awplus(config)# vlan database
awplus(config-vlan)# vlan 100
awplus(config-vlan)# exit
awplus(config)# interface port1.0.2
awplus(config-if)# dot1x port-control auto
awplus(config-if)# auth guest-vlan 100 routing
```

To disable the guest VLAN feature on port1.0.2, use the following commands:

```
awplus# configure terminal
awplus(config)# interface port1.0.2
awplus(config-if)# no auth guest-vlan
```

To define vlan100 and assign the guest VLAN feature to vlan100 on authentication profile 'student', use the commands:

```
awplus# configure terminal
awplus(config)# vlan database
awplus(config-vlan)# vlan 100
awplus(config-vlan)# exit
awplus(config)# auth profile student
awplus(config-auth-profile)# auth guest-vlan 100
```

**Related commands**

auth profile (global)

auth guest-vlan forward

dot1x port-control

show dot1x

show dot1x interface

**Command changes**

Version 5.4.9-2.1: command added to AR2050V, AR3050S, and AR4050S

# auth guest-vlan forward

**Overview** Use this command to enable packet forwarding from the guest VLAN to a destination IP address or subnet. If this command is configured, the device can lease DHCP addresses and accept access to a limited part of your network. Also, when using NAP authentication, the supplicant can log on to a domain controller to gain certification.

Use the **no** variant of this command to disable packet forwarding from the Guest VLAN to a destination IP address or subnet.

**Syntax**

```
auth guest-vlan forward {<ip-address>|<ip-address/mask>}
[dns|tcp <1-65535>|udp <1-65535>]
```

```
no auth guest-vlan forward {<ip-address>|<ip-address/mask>}
[dns|tcp <1-65535>|udp <1-65535>]
```

| Parameter | Description |
|---|---|
| *<ip-address>* *<ip-address/mask>* | The IP address or subnet to which the guest VLAN can forward packets, in dotted decimal notation |
| `dns` | Enable forwarding of DNS packets |
| `tcp` *<1-65535>* | Enable forwarding of packets for the specified TCP port number |
| `udp` *<1-65535>* | Enable forwarding of packets for the specified UDP port number |

**Default** Forwarding is disabled by default.

**Mode** Interface Configuration mode for a specified switch port, or Authentication Profile mode

**Usage** Before using this command, you must configure the guest VLAN with the auth guest-vlan command.

**Example** To enable packet forwarding from the guest VLAN to the destination IP address on interface port1.0.2, use the commands:

```
awplus# configure terminal
awplus(config)# interface port1.0.2
awplus(config-if)# auth guest-vlan forward 10.0.0.1
```

To enable forwarding of DNS packets from the guest VLAN to the destination IP address on interface port1.0.2, use the commands:

```
awplus# configure terminal
awplus(config)# interface
awplus(config-if)# auth guest-vlan forward 10.0.0.1 dns
```

To disable forwarding of DNS packets from the guest VLAN to the destination IP address on port1.0.2, use the commands:

```
awplus# configure terminal
awplus(config)# interface port1.0.2
awplus(config-if)# no auth guest-vlan forward 10.0.0.1 dns
```

To enable the TCP forwarding port 137 on authentication profile 'student', use the commands:

```
awplus# configure terminal
awplus(config)# auth profile student
awplus(config-auth-profile)# auth guest-vlan forward 10.0.0.1
tcp 137
```

**Related commands**

auth guest-vlan

auth profile (global)

show running-config

**Command changes**

Version 5.4.9-2.1: command added to AR2050V, AR3050S, and AR4050S

# auth host-mode

**Overview** Use this command to select the host mode on the specified interface.

Use the **no** variant of this command to set host mode to the default setting (single host).

**Syntax**

```
auth host-mode {single-host|multi-host|multi-supplicant}
no auth host-mode
```

| Parameter | Description |
|---|---|
| `single-host` | In this mode, only one supplicant is allowed per port. This is the default mode. |
| `multi-host` | In this mode, once the first host on a port is authenticated, all other downstream hosts are allowed without being authenticated (piggy-back mode). |
| `multi-supplicant` | In this mode, multiple separate supplicants are individually authenticated on one port. |

**Default** The default host mode for port authentication is for a single host.

**Mode** auth-web: Interface Configuration for an Eth interface, or Authentication Profile mode.
auth-mac: Interface Configuration for a static channel, a dynamic (LACP) channel group, or a switch port; or Authentication Profile mode.
dot1x: Interface Configuration for a a switch port; or Authentication Profile mode.

**Usage notes**

### Single-host mode

With this mode, only one supplicant may be authenticated on the port. Once that host has been authenticated, no other supplicants may be authenticated until the first supplicant's session has closed. This means, of course, that none of the other hosts downstream of the port will be able to send or receive traffic on that port.

This option is recommended when you know that there should only be one host connected to a port. By limiting the port to a single authenticated host, you guard against the consequences of someone accidentally or maliciously connecting a downstream switch to the port.

### Multi-host mode

With this mode, once the first host has been authenticated on the port, all other downstream hosts are allowed without being authenticated. This is sometimes known as piggy-back mode. It is useful when the downstream switch attached to the authenticating port is an intelligent switch that can act as an authentication supplicant.

If you trust that malicious users cannot be connected to that switch but you do not know the identity of those users, then you can simply authenticate the switch and then allow its attached users to have network access. If the valid switch is

disconnected and an invalid one is connected which is not configured with the correct authentication credentials, then the devices connected to the invalid switch will be blocked from accessing the network.

**Examples**

To set the host mode to multi-supplicant on interface port1.0.2, use the following commands:

```
awplus# configure terminal
awplus(config)# interface port1.0.2
awplus(config-if)# auth host-mode multi-supplicant
```

To set the host mode to default (single host) on interface port1.0.2, use the following commands:

```
awplus# configure terminal
awplus(config)# interface port1.0.2
awplus(config-if)# no auth host-mode
```

To set the host mode to multi-supplicant on authentication profile 'student', use the commands:

```
awplus# configure terminal
awplus(config)# auth profile student
awplus(config-auth-profile)# auth host-mode multi-supplicant
```

To set the host mode to default (single host) on authentication profile 'student', use the commands:

```
awplus# configure terminal
awplus(config)# auth profile student
awplus(config-auth-profile)# no auth host-mode
```

**Related commands**

auth profile (global)

show dot1x

show dot1x interface

show running-config

# auth log

**Overview** Use this command to configure the types of authentication feature log messages that are output to the log file.

Use the **no** variant of this command to remove either specified types or all types of authentication feature log messages that are output to the log file.

**Syntax**

```
auth log {dot1x|auth-mac|auth-web}
{success|failure|logoff|all}
```

```
no auth log {dot1x|auth-mac|auth-web}
{success|failure|logoff|all}
```

| Parameter | Description |
|---|---|
| dot1x | Specify only 802.1X-Authentication log messages are output to the log file. |
| auth-mac | Specify only MAC-Authentication log messages are output to the log file. |
| auth-web | Specify only Web-Authentication log messages are output to the log file. |
| success | Specify only successful authentication log messages are output to the log file. |
| failure | Specify only authentication failure log messages are output to the log file. |
| logoff | Specify only authentication log-off messages are output to the log file. Note that link down, age out and expired ping polling messages will be included. |
| all | Specify all types of authentication log messages are output to the log file. Note that this is the default behavior for the authentication logging feature. |

**Default** All types of authentication log messages are output to the log file by default.

**Mode** auth-web: Interface Configuration for an Eth interface, or Authentication Profile mode.
auth-mac: Interface Configuration for a static channel, a dynamic (LACP) channel group, or a switch port; or Authentication Profile mode.
dot1x: Interface Configuration for a a switch port; or Authentication Profile mode.

**Examples** To configure the logging of web authentication failures to the log file for supplicants (client devices) connected to interface eth1, use the following commands:

```
awplus# configure terminal
awplus(config)# interface eth1
awplus(config-if)# auth log auth-web failure
```

To configure the logging of web authentication failures to the log file for supplicants (client devices) connected to authentication profile 'student', use the commands:

```
awplus# configure terminal
awplus(config)# auth profile student
awplus(config-auth-profile)# auth log auth-web failure
```

To disable the logging of all types of authentication log messages to the log file for auth-mac supplicants (client devices) connected to authentication profile 'student', use the commands:

```
awplus# configure terminal
awplus(config)# auth profile student
awplus(config-auth-profile)# no auth log auth-mac all
```

**Related commands**

auth profile (global)

show running-config

# auth max-supplicant

**Overview** Use this command to set the maximum number of supplicants (client devices) that can be authenticated on the selected port. Once this value is exceeded, further supplicants will not be authenticated.

The **no** variant of this command resets the maximum supplicant number to the default.

**Syntax**

```
auth max-supplicant <2-1024>
no auth max-supplicant
```

| Parameter | Description |
|---|---|
| *<2-1024>* | Limit number. |

**Default** The max supplicant of port authentication is 1024.

**Mode** auth-web: Interface Configuration for an Eth interface, or Authentication Profile mode.
auth-mac: Interface Configuration for a static channel, a dynamic (LACP) channel group, or a switch port; or Authentication Profile mode.
dot1x: Interface Configuration for a a switch port; or Authentication Profile mode.

**Examples** To set the maximum number of supplicants to 10 on interface eth1, use the following commands:

```
awplus# configure terminal
awplus(config)# interface eth1
awplus(config-if)# auth max-supplicant 10
```

To reset the maximum number of supplicants to the default value on interface eth1, use the following commands:

```
awplus# configure terminal
awplus(config)# interface eth1
awplus(config-if)# no auth max-supplicant
```

To set the maximum number of supplicants to 10 on authentication profile ‘student’, use the commands:

```
awplus# configure terminal
awplus(config)# auth profile student
awplus(config-auth-profile)# auth max-supplicant 10
```

To reset the maximum number of supplicants to the default value on authentication profile 'student', use the commands:

```
awplus# configure terminal
awplus(config)# auth profile student
awplus(config-auth-profile)# no auth max-supplicant
```

**Related commands**

auth profile (global)

show dot1x

show dot1x interface

show running-config

# auth multi-vlan-session

**Overview**

Use this command to enable packet forwarding on multiple VLANs for an authenticated supplicant attached to a trunked (tagged VLAN) port.

By default, AlliedWare Plus only allows packet forwarding on the VLAN that a device was authenticated on. This command enables packet forwarding to the attached device on any VLAN configured on the switchport. After the device authenticates it will have access to all VLANs configured on the switchport.

Use the **no** variant of this command to disable packet forwarding on multiple VLANs for an authenticated supplicant.

**Syntax**

```
auth multi-vlan-session
no auth multi-vlan-session
```

**Default**

By default, **multi-vlan-session** is disabled.

**Mode**

Interface Configuration for a static channel, a dynamic (LACP) channel group, or a switch port; or Authentication Profile mode.

**Example**

To allow a client attached to port1.0.2 to access all VLANs configured on the AlliedWare Plus device, use the commands:

```
awplus# configure terminal
awplus(config)# interface port1.0.2
awplus(config-if)# switchport mode trunk
awplus(config-if)# switchport trunk allowed vlan all
awplus(config-if)# auth host-mode multi-supplicant
awplus(config-if)# auth multi-vlan-session
```

To disable **multi-vlan-session** on interface port1.0.2, use the commands:

```
awplus# configure terminal
awplus(config)# interface port1.0.2
awplus(config-if)# no auth multi-vlan-session
```

**Related commands**

auth-mac enable

auth-web enable

dot1x port-control

show auth interface

show dot1x interface

**Command changes**

Version 5.4.8-1.1: command added

Version 5.4.9-2.1: command added to AR2050V, AR3050S, and AR4050S

# auth priority

**Overview** Use this command to enable authentication priority on an interface. This sets the tri-authentication order of priority for MAC, 802.1X, and web-based authentication. If tri-authentication is not configured on the interface then this command has no effect.

You specify the authentication methods in order of priority. The first method in the list has the highest priority, the second method has the second highest priority, and the third method has the lowest priority. Any methods not specified will have the lowest priority.

Use the **no** variant of this command to disable authentication priority.

**Syntax**

```
auth priority {[auth-mac] [dot1x] [auth-web]}
no auth priority
```

| Parameter | Description |
|---|---|
| `auth-mac` | Set MAC authentication priority. |
| `dot1x` | Set 802.1X authentication priority. |
| `auth-web` | Set web-based authentication priority. |

**Default** Authentication priority is not set.

**Mode** Interface Configuration for a static channel, a dynamic (LACP) channel group, or a switch port; or Authentication Profile mode.

**Usage notes** Before using this command you must correctly configure tri-authentication on the interface. Tri-authentication is when multiple authentication methods (MAC, 802.1X, and/or web-based) are configured on the same interface. With tri-authentication, a supplicant is authorized to use the network as soon as they are successfully authenticated by any of the configured authentication methods.

When authentication priority is not set, once a supplicant is authenticated any future attempts to authenticate are ignored. When, however, authentication priority is set, and a higher priority authentication attempt is made by the supplicant, a new authentication process starts. The supplicant will then be authorized, or unauthorized, based on the result of this new authentication attempt.

**Example**

To configure 802.1X authentication to have a higher priority than MAC authentication on interface port1.0.2, use the commands:

```
awplus# configure terminal
awplus(config)# interface port1.0.2
awplus(config-if)# switchport mode access
awplus(config-if)# auth-mac enable
awplus(config-if)# dot1x port-control auto
awplus(config-if)# auth priority dot1x auth-mac
```

To disable authentication priority on interface port1.0.2, use the commands:

```
awplus# configure terminal
awplus(config)# interface port1.0.2
awplus(config-if)# no auth priority
```

To configure 802.1X authentication to have a higher priority than MAC authentication on authentication profile 'student', use the commands:

```
awplus# configure terminal
awplus(config)# auth profile student
awplus(config-if)# switchport mode access
awplus(config-if)# auth-mac enable
awplus(config-if)# dot1x port-control auto
awplus(config-if)# auth priority dot1x auth-mac
```

**Related commands**

auth profile (interface)

auth-mac enable

auth-web enable

dot1x port-control

**Command changes**

Version 5.5.0-2.1: command added

# auth profile (global)

**Overview**

Use this command to enter port authentication profile mode and configure a port authentication profile.

If the specified profile does not exist a new authentication profile is created with the name provided.

Use the **no** variant of this command to delete the specified port authentication profile.

**Syntax**

```
auth profile <profile-name>
no auth profile <profile-name>
```

| Parameter | Description |
|---|---|
| *<profile-name>* | Name of the profile to create or configure. |

**Default**

No port authentication profiles are created by default.

**Mode**

Global Configuration

**Usage**

A port authentication profile is a configuration object that aggregates multiple port authentication commands. These profiles are attached or detached from an interface using the auth profile (interface) command.

**Example**

To create a new authentication profile 'student', use the following commands:

```
awplus# configure terminal
awplus(config)# auth profile student
awplus(config-auth-profile)#
```

To delete an authentication profile 'student', use the following commands:

```
awplus# configure terminal
awplus(config)# no auth profile student
```

**Related commands**

auth profile (interface)

description (auth-profile)

# auth profile (interface)

**Overview**

Use this command to attach a port authentication profile to the current interface.

Use the **no** variant of this command to detach a port authentication profile from the current interface.

**Syntax**

```
auth profile <profile-name>
no auth profile <profile-name>
```

| Parameter | Description |
|---|---|
| *<profile-name>* | The name of the profile to attach to the current interface. |

**Default**

No profile is attached by default.

**Mode**

auth-web: Interface Configuration for an Eth interface, or Authentication Profile mode.
auth-mac: Interface Configuration for a static channel, a dynamic (LACP) channel group, or a switch port; or Authentication Profile mode.
dot1x: Interface Configuration for a a switch port; or Authentication Profile mode.

**Usage**

This command attaches an authentication profile, that was created using the auth profile (global) command, to an Eth port, a static channel, a dynamic (LACP) channel group, or a switch port.

You can only attach one profile to an interface at a time. Use the **no** variant of the command to detach a profile before attempting to attach another one.

**Example**

To attach the authentication profile 'student' to eth1, use the following commands:

```
awplus# configure terminal
awplus(config)# interface eth1
awplus(config-if)# auth profile student
```

To detach the authentication profile 'student' from eth1, use the following commands:

```
awplus# configure terminal
awplus(config)# interface eth1
awplus(config-if)# no auth profile student
```

**Related commands**

auth profile (global)

# auth reauthentication

**Overview** Use this command to enable reauthentication on the interface specified in the Interface mode.

Use the **no** variant of this command to disable reauthentication on the interface.

**Syntax**

```
auth reauthentication
no auth reauthentication
```

**Default** Reauthentication of port authentication is disabled by default.

**Mode** auth-web: Interface Configuration for an Eth interface, or Authentication Profile mode.
auth-mac: Interface Configuration for a static channel, a dynamic (LACP) channel group, or a switch port; or Authentication Profile mode.
dot1x: Interface Configuration for a a switch port; or Authentication Profile mode.

**Examples** To enable reauthentication on interface eth1, use the following commands:

```
awplus# configure terminal
awplus(config)# interface eth1
awplus(config-if)# auth reauthentication
```

To disable reauthentication on interface eth1, use the following commands:

```
awplus# configure terminal
awplus(config)# interface eth1
awplus(config-if)# no auth reauthentication
```

To enable reauthentication on authentication profile 'student', use the commands:

```
awplus# configure terminal
awplus(config)# auth profile student
awplus(config-auth-profile)# auth reauthentication
```

**Related commands**

auth profile (global)

show dot1x

show dot1x interface

show running-config

# auth roaming disconnected

**Overview**

This command allows a supplicant to move to another authenticating interface without reauthentication, even if the link is down for the interface that the supplicant is currently connected to.

You must enter the auth roaming enable command on both interfaces before using this command.

The **no** variant of this command disables roaming authentication on interfaces that are link-down, and forces a supplicant to be reauthenticated when moving between interfaces.

See the AAA and Port Authentication Feature Overview and Configuration Guide for further information about this feature.

**Syntax**

```
auth roaming disconnected
no auth roaming disconnected
```

**Default**

By default, the authentication status for a roaming supplicant is deleted when an interface goes down, so supplicants must reauthenticate.

**Mode**

Interface Configuration for a static channel, a dynamic (LACP) channel group, or a switch port; or Authentication Profile mode.

**Usage notes**

Note that 802.1X port authentication, MAC-authentication, or Web-authentication must be configured before using this feature. The port that the supplicant is moving to must have the same authentication configuration as the port the supplicant is moving from.

**Examples**

To allow supplicants to move from port1.0.2 without reauthentication even when the link is down, when using 802.1X authentication, use the commands:

```
awplus# configure terminal
awplus(config)# interface port1.0.2
awplus(config-if)# dot1x port-control auto
awplus(config-if)# auth roaming enable
awplus(config-if)# auth roaming disconnected
```

To require supplicants to reauthenticate when moving from port1.0.2 if the link is down, when using 802.1X authentication, use the commands:

```
awplus# configure terminal
awplus(config)# interface port1.0.2
awplus(config-if)# no auth roaming disconnected
```

To allow supplicants using authentication profile 'student' to move between ports without reauthentication even when the link is down, use the commands:

```
awplus# configure terminal
awplus(config)# auth profile student
awplus(config-auth-profile)# auth roaming disconnected
```

To require supplicants using authentication profile 'student' to reauthenticate when moving between ports if the link is down, use the commands:

```
awplus# configure terminal
awplus(config)# auth profile student
awplus(config-auth-profile)# no auth roaming disconnected
```

**Related commands**

auth profile (global)

auth-mac enable

auth roaming enable

auth-web enable

show auth interface

show running-config

# auth roaming enable

**Overview**

Use this command to allow a supplicant to move to another authenticating interface without reauthentication, providing the link is up for the interface that the supplicant is currently connected to.

The **no** variant of this command disables roaming authentication on an interface, and forces a supplicant to be reauthenticated when moving between interfaces.

See the AAA and Port Authentication Feature Overview and Configuration Guide for further information about this feature.

**Syntax**

```
auth roaming enable
no auth roaming enable
```

**Default**

Roaming authentication is disabled by default.

**Mode**

Interface Configuration for a static channel, a dynamic (LACP) channel group, or a switch port; or Authentication Profile mode.

**Usage notes**

Note that 802.1X port authentication or MAC authentication must be configured before using this feature. The port that the supplicant is moving to must have the same authentication configuration as the port the supplicant is moving from.

This command only enables roaming authentication for links that are up. If you want roaming authentication on links that are down, you must also use the command auth roaming disconnected.

**Examples**

To enable roaming authentication for port1.0.4, when using auth-mac authentication, use the commands:

```
awplus# configure terminal
awplus(config)# interface port1.0.4
awplus(config-if)# auth-mac enable
awplus(config-if)# auth roaming enable
```

To disable roaming authentication for port1.0.4, use the commands:

```
awplus# configure terminal
awplus(config)# interface port1.0.4
awplus(config-if)# no auth roaming enable
```

To enable roaming authentication for authentication profile ‘student’, use the commands:

```
awplus# configure terminal
awplus(config)# auth profile student
awplus(config-auth-profile)# auth roaming enable
```

**Related commands**

auth profile (global)

auth-mac enable

auth roaming disconnected

auth-web enable

dot1x port-control

show auth interface

show dot1x interface

show running-config

# auth supplicant-ip

**Overview** Use this command to add a supplicant (client device) IP address on a given interface and provides parameters for its configuration.

Use the **no** variant of this command to delete the supplicant IP address and reset other parameters to their default values. The IP address can be determined before authentication for auth-web clients only.

**Syntax**

```
auth supplicant-ip <ip-addr> [max-reauth-req <1-10>]
[port-control {auto|force-authorized|force-unauthorized|
skip-second-auth}] [quiet-period <1-65535>] [reauth-period
<1-4294967295>] [supp-timeout <1-65535>] [server-timeout
<1-65535>] [reauthentication]
```

```
no auth supplicant-ip <ip-addr> [reauthentication]
```

| Parameter | Description |
|---|---|
| *<ip-addr>* | IP address of the supplicant entry in A.B.C.D/P format. |
| `max-reauth-req` | The number of reauthentication attempts before becoming unauthorized. |
| *<1-10>* | Count of reauthentication attempts (default 2). |
| `port-control` | Port control commands. |
| `auto` | A port control parameter that allows port clients to negotiate authentication. |
| `force-authorized` | A port control parameter that forces the port state to authorized. |
| `force-unauthorized` | A port control parameter that forces the port state to unauthorized. |
| `skip-second-auth` | Skip the second authentication. |
| `quiet-period` | Quiet period during which the port remains in the HELD state (default 60 seconds). |
| *<1-65535>* | Seconds for quiet period. |
| `reauth-period` | Seconds between reauthorization attempts (default 3600 seconds). |
| *<1-4294967295>* | Seconds for reauthorization attempts (reauth-period). |
| `supp-timeout` | Supplicant response timeout. |
| *<1-65535>* | Seconds for supplicant response timeout (default 30 seconds). |
| `server-timeout` | The period, in seconds, before the authentication server response times out. |

| Parameter | Description |
|---|---|
| *<1-65535>* | The server-timeout period, in seconds, default 3600 seconds. |
| `reauthentication` | Enable reauthentication on a port. |

**Default**

No supplicant IP address for port authentication exists by default until first created with the **auth supplicant-ip** command. The defaults for parameters applied are as shown in the table above.

**Mode**

auth-web: Interface Configuration for an Eth interface, or Authentication Profile mode.
auth-mac: Interface Configuration for a static channel, a dynamic (LACP) channel group, or a switch port; or Authentication Profile mode.
dot1x: Interface Configuration for a a switch port; or Authentication Profile mode.

**Examples**

To add the supplicant IP address 192.168.10.0/24 to force authorized port control for interface eth1, use the commands:

```
awplus# configure terminal
awplus(config)# interface eth1
awplus(config-if)# auth supplicant-ip 192.168.10.0/24
port-control force-authorized
```

To delete the supplicant IP address 192.168.10.0/24 for interface eth1, use the commands:

```
awplus# configure terminal
awplus(config)# interface eth1
awplus(config-if)# no auth supplicant-ip 192.168.10.0/24
```

To disable reauthentication for the supplicant(s) IP address 192.168.10.0/24 for interface eth1, use the commands:

```
awplus# configure terminal
awplus(config)# interface eth1
awplus(config-if)# no auth supplicant-ip 192.168.10.0/24
reauthentication
```

To add the supplicant IP address 192.168.10.0/24 to force authorized port control for auth profile 'student', use the commands:

```
awplus# configure terminal
awplus(config)# auth profile student
awplus(config-auth-profile)# auth supplicant-ip
192.168.10.0/24 port-control force-authorized
```

**Related commands**

show auth

show dot1x

show dot1x interface

show running-config

# auth supplicant-mac

**Overview** This command adds a supplicant (client device) MAC address or MAC mask on a given interface with the parameters as specified in the table below.

Use the **no** variant of this command to delete the supplicant MAC address and reset other parameters to their default values.

**Syntax**

```
auth supplicant-mac <mac-addr> [mask <mac-addr-mask>]
[max-reauth-req <1-10>] [port-control {auto|force-authorized|
force-unauthorized|skip-second-auth}] [quiet-period <1-65535>]
[reauth-period <1-4294967295>] [supp-timeout <1-65535>]
[server-timeout <1-65535>] [reauthentication]
```

```
no auth supplicant-mac <mac-addr> [reauthentication]
```

| Parameter | Description |
|---|---|
| *<mac-addr>* | MAC (hardware) address of the supplicant entry in HHHH.HHHH.HHHH MAC address hexadecimal format. |
| mask | A mask applied to MAC addresses in order to select only those addresses containing a specific string. |
| *<mac-addr-mask>* | The mask comprises a string of three (period separated) bytes, where each byte comprises four hexadecimal characters that will generally be either 1or 0. When the mask is applied to a specific MAC address, a match is only required for characters that correspond to a 1 in the mask. Characters that correspond to a 0 in the mask are effectively ignored.<br>In the examples section below, the mask ffff.ff00.0000 is applied for the MAC address 0000.5E00.0000. The applied mask will then match only those MAC addresses that begin with 0000.5E (in this case the OUI component). The remaining portion of the addresses (in this case the NIC component) will be ignored. |
| port-control | Port control commands. |
| auto | Allow port client to negotiate authentication. |
| force-authorized | Force port state to authorized. |
| force-unauthorized | Force port state to unauthorized. |
| skip-second-auth | Skip the second authentication. |
| quiet-period | Quiet period in the HELD state (default 60 seconds). |
| *<1-65535>* | Seconds for quiet period. |
| reauth-period | Seconds between reauthorization attempts (default 3600 seconds). |
| *<1-4294967295>* | Seconds for reauthorization attempts (reauth-period). |
| supp-timeout | Supplicant response timeout (default 30 seconds). |

| Parameter | Description |
|---|---|
| *<1-65535>* | Seconds for supplicant response timeout. |
| `server-timeout` | Authentication server response timeout (default 30 seconds). |
| *<1-65535>* | Seconds for authentication server response timeout. |
| `reauthentication` | Enable reauthentication on a port. |
| `max-reauth-req` | No of reauthentication attempts before becoming unauthorized (default 2). |
| *<1-10>* | Count of reauthentication attempts. |

**Default** No supplicant MAC address for port authentication exists by default until first created with the **auth supplicant-mac** command. The defaults for parameters are shown in the table above.

**Mode** auth-web: Interface Configuration for an Eth interface, or Authentication Profile mode.
auth-mac: Interface Configuration for a static channel, a dynamic (LACP) channel group, or a switch port; or Authentication Profile mode.
dot1x: Interface Configuration for a a switch port; or Authentication Profile mode.

**Examples** To add the supplicant MAC address 0000.5E00.5343 to force authorized port control for interface port1.0.2, use the commands:

```
awplus# configure terminal
awplus(config)# interface port1.0.2
awplus(config-if)# auth supplicant-mac 0000.5E00.5343
port-control force-authorized
```

To apply the mask ffff.ff00.0000 in order to add any supplicant MAC addresses whose MAC address begins with 0000.5E, and then to force authorized port control for interface port1.0.2, use the commands:

```
awplus# configure terminal
awplus(config)# interface port1.0.2
awplus(config-if)# auth supplicant-mac 0000.5E00.0000 mask
ffff.ff00.0000 port-control force-authorized
```

To delete the supplicant MAC address 0000.5E00.5343 for interface port1.0.2, use the commands:

```
awplus# configure terminal
awplus(config)# interface port1.0.2
awplus(config-if)# no auth supplicant-mac 0000.5E00.5343
```

To disable reauthentication for the supplicant MAC address 0000.5E00.5343 for interface port1.0.2, use the commands:

```
awplus# configure terminal
awplus(config)# interface eth1
awplus(config-if)# no auth supplicant-mac 0000.5E00.5343
reauthentication
```

To add the supplicant MAC address 0000.5E00.5343 to force authorized port control for authentication profile 'student', use the commands:

```
awplus# configure terminal
awplus(config)# auth profile student
awplus(config-auth-profile)# auth supplicant-mac
0000.5E00.5343 port-control force-authorized
```

To delete the supplicant MAC address 0000.5E00.5343 for authentication profile 'student', use the commands:

```
awplus# configure terminal
awplus(config)# auth profile student
awplus(config-auth-profile)# no auth supplicant-mac
0000.5E00.5343
```

**Related commands**

show auth

show dot1x

show dot1x interface

show running-config

# auth timeout connect-timeout

**Overview** Use this command to set the connect-timeout period for the interface.

Use the **no** variant of this command to reset the connect-timeout period to the default.

**Syntax**

```
auth timeout connect-timeout <1-65535>
no auth timeout connect-timeout
```

| Parameter | Description |
|---|---|
| *<1-65535>* | Specifies the connect-timeout period (in seconds). |

**Default** The connect-timeout default is 30 seconds.

**Mode** auth-web: Interface Configuration for an Eth interface, or Authentication Profile mode.
auth-mac: Interface Configuration for a static channel, a dynamic (LACP) channel group, or a switch port; or Authentication Profile mode.
dot1x: Interface Configuration for a a switch port; or Authentication Profile mode.

**Usage notes** This command is used for MAC and web authentication. If the connect-timeout has lapsed and the supplicant has the state **connecting**, then the supplicant is deleted. When auth-web-server session-keep or auth two-step enable is enabled, we recommend you configure a longer connect-timeout period.

**Examples** To set the connect-timeout period to 3600 seconds for interface eth1, use the following commands:

```
awplus# configure terminal
awplus(config)# interface eth1
awplus(config-if)# auth timeout connect-timeout 3600
```

To reset the connect-timeout period to the default (30 seconds) for interface eth1, use the following commands:

```
awplus# configure terminal
awplus(config)# interface eth1
awplus(config-if)# no auth timeout connect-timeout
```

To set the connect-timeout period to 3600 seconds for authentication profile 'student', use the commands:

```
awplus# configure terminal
awplus(config)# auth profile student
awplus(config-auth-profile)# auth timeout connect-timeout 3600
```

**Related commands** auth profile (global)

show dot1x

show dot1x interface

# auth timeout quiet-period

**Overview** Use this command to set a time period for which another authentication request is not accepted on a given interface, after an authentication request has failed.

Use the **no** variant of this command to reset the quiet period to the default.

**Syntax**

```
auth timeout quiet-period <1-65535>
no auth timeout quiet-period
```

| Parameter | Description |
|---|---|
| *<1-65535>* | Specifies the quiet period (in seconds). |

**Default** The quiet period for port authentication is 60 seconds.

**Mode** auth-web: Interface Configuration for an Eth interface, or Authentication Profile mode.
auth-mac: Interface Configuration for a static channel, a dynamic (LACP) channel group, or a switch port; or Authentication Profile mode.
dot1x: Interface Configuration for a a switch port; or Authentication Profile mode.

**Examples** To set the quiet period to 10 seconds for interface eth1, use the commands:

```
awplus# configure terminal
awplus(config)# interface eth1
awplus(config-if)# auth timeout quiet-period 10
```

To reset the quiet period to the default (60 seconds) for interface eth1, use the commands:

```
awplus# configure terminal
awplus(config)# interface eth1
awplus(config-if)# no auth timeout quiet-period
```

To set the quiet period to 10 seconds for authentication profile ‘student’, use the commands:

```
awplus# configure terminal
awplus(config)# auth profile student
awplus(config-auth-profile)# auth timeout quiet-period 10
```

**Related commands** auth profile (global)

# auth timeout reauth-period

**Overview** Use this command to set the timer for reauthentication on a given interface. The re-authentication for the supplicant (client device) is executed at this timeout. The timeout is only applied if the **auth reauthentication** command is applied.

Use the **no** variant of this command to reset the **reauth-period** parameter to the default (3600 seconds).

**Syntax**

```
auth timeout reauth-period <1-4294967295>
no auth timeout reauth-period
```

| Parameter | Description |
|---|---|
| *<1-4294967295>* | The reauthentication timeout period (in seconds). |

**Default** The default reauthentication period for port authentication is 3600 seconds, when reauthentication is enabled on the port.

**Mode** auth-web: Interface Configuration for an Eth interface, or Authentication Profile mode.
auth-mac: Interface Configuration for a static channel, a dynamic (LACP) channel group, or a switch port; or Authentication Profile mode.
dot1x: Interface Configuration for a a switch port; or Authentication Profile mode.

**Examples** To set the reauthentication period to 1 day for interface eth1, use the following commands:

```
awplus# configure terminal
awplus(config)# interface eth1
awplus(config-if)# auth timeout reauth-period 86400
```

To reset the reauthentication period to the default (3600 seconds) for interface eth1, use the following commands:

```
awplus# configure terminal
awplus(config)# interface eth1
awplus(config-if)# no auth timeout reauth-period
```

To set the reauthentication period to 1 day for authentication profile 'student', use the commands:

```
awplus# configure terminal
awplus(config)# auth profile student
awplus(config-auth-profile)# auth timeout reauth-period 86400
```

To reset the reauthentication period to the default (3600 seconds) for authentication profile 'student', use the commands:

```
awplus# configure terminal
awplus(config)# auth profile student
awplus(config-auth-profile)# no auth timeout reauth-period
```

**Related commands**

auth profile (global)

auth reauthentication

show dot1x

show dot1x interface

show running-config

# auth timeout server-timeout

**Overview** Use this command to set the timeout for the waiting response from the RADIUS server on a given interface.

Use the **no** variant of this command to reset the server-timeout to the default (30 seconds).

**Syntax**

```
auth timeout server-timeout <1-65535>
no auth timeout server-timeout
```

| Parameter | Description |
|---|---|
| *<1-65535>* | Server timeout period (in seconds). |

**Default** The server timeout for port authentication is 30 seconds.

**Mode** auth-web: Interface Configuration for an Eth interface, or Authentication Profile mode.
auth-mac: Interface Configuration for a static channel, a dynamic (LACP) channel group, or a switch port; or Authentication Profile mode.
dot1x: Interface Configuration for a a switch port; or Authentication Profile mode.

**Examples** To set the server timeout to 120 seconds for interface eth1, use the following commands:

```
awplus# configure terminal
awplus(config)# interface eth1
awplus(config-if)# auth timeout server-timeout 120
```

To set the server timeout to the default (30 seconds) for interface `eth1`, use the following commands:

```
awplus# configure terminal
awplus(config)# interface eth1
awplus(config-if)# no auth timeout server-timeout
```

To set the server timeout to 120 seconds for authentication profile 'student', use the commands:

```
awplus# configure terminal
awplus(config)# auth profile student
awplus(config-auth-profile)# auth timeout server-timeout 120
```

To set the server timeout to the default (30 seconds) for authentication profile 'student', use the commands:

```
awplus# configure terminal
awplus(config)# auth profile student
awplus(config-auth-profile)# no auth timeout server-timeout
```

**Related commands**

auth profile (global)

show dot1x

show dot1x interface

show running-config

# auth timeout supp-timeout

**Overview**

This command sets the timeout of the waiting response from the supplicant (client device) on a given interface.

The **no** variant of this command resets the supplicant timeout to the default (30 seconds).

**Syntax**

```
auth timeout supp-timeout <1-65535>
no auth timeout supp-timeout
```

| Parameter | Description |
|---|---|
| *<1-65535>* | The supplicant timeout period (in seconds). |

**Default**

The supplicant timeout for port authentication is 30 seconds.

**Mode**

auth-web: Interface Configuration for an Eth interface, or Authentication Profile mode.
auth-mac: Interface Configuration for a static channel, a dynamic (LACP) channel group, or a switch port; or Authentication Profile mode.
dot1x: Interface Configuration for a a switch port; or Authentication Profile mode.

**Examples**

To set the supplicant timeout to 2 seconds for interface port1.0.2, use the following commands:

```
awplus# configure terminal
awplus(config)# interface port1.0.2
awplus(config-if)# auth timeout supp-timeout 2
```

To reset the supplicant timeout to the default (30 seconds) for interface port1.0.2, use the following commands:

```
awplus# configure terminal
awplus(config)# interface port1.0.2
awplus(config-if)# no auth timeout supp-timeout
```

To set the supplicant timeout to 2 seconds for authentication profile 'student', use the commands:

```
awplus# configure terminal
awplus(config)# auth profile student
awplus(config-auth-profile)# auth timeout supp-timeout 2
```

**Related commands**

auth profile (global)

show dot1x

show dot1x interface

show running-config

# auth two-step enable

**Overview** Use this command to enable a two-step authentication feature on an interface. When this feature is enabled, the supplicant is authorized in a two-step process. If authentication succeeds, the supplicant becomes authenticated.

Use this command to apply the two-step authentication method based on 802.1X or MAC authentication.

Use the **no** variant of this command to disable the two-step authentication feature.

**Syntax**

```
auth two-step enable
no auth two-step enable
```

**Default** Two step authentication is disabled by default.

**Mode** Interface Configuration for a switch port; or Authentication Profile mode.

**Usage** The single step authentication methods (either user or device authentication) have a potential security risk:

- an unauthorized user can access the network with an authorized device, or
- an authorized user can access the network with an unauthorized device.

Two-step authentication solves this problem by authenticating both the user and the device. The supplicant will only become authenticated if both these steps are successful. If the first authentication step fails, then the second step is not started.

**Examples** To enable the two step authentication feature, use the following commands:

```
awplus# configure terminal
awplus(config)# interface port1.0.2
awplus(config-if)# auth two-step enable
```

To disable the two step authentication feature, use the following commands:

```
awplus# configure terminal
awplus(config)# interface port1.0.2
awplus(config-if)# no auth two-step enable
```

To enable MAC authentication followed by 802.1X authentication, use the following commands:

```
awplus# configure terminal
awplus(config)# interface port1.0.2
awplus(config-if)# switchport mode access
awplus(config-if)# auth-mac enable
awplus(config-if)# dot1x port-control auto
awplus(config-if)# auth dynamic-vlan-creation
awplus(config-if)# auth two-step enable
```

To enable the two step authentication feature for authentication profile 'student', use the commands:

```
awplus# configure terminal
awplus(config)# auth profile student
awplus(config-auth-profile)# auth two-step enable
```

**Related Commands**

auth profile (global)

auth two-step order

show auth two-step supplicant brief

show auth

show auth interface

show auth supplicant

show dot1x

show dot1x interface

show dot1x supplicant

**Command changes**

Version 5.4.9-2.1: command added to AR2050V, AR3050S, and AR4050S

# auth two-step order

**Overview** Use this command to configure the order for two-step authentication. Two-step authentication and the relevant authentication methods must be enabled on the interface.

Use the **no** variant of this command to reset the authentication order to the default.

**Syntax**

```
auth two-step order auth-mac dot1x
auth two-step order dot1x auth-mac
no auth two-step order
```

| Parameter | Description |
|---|---|
| auth-mac | MAC authentication |
| dot1x | 802.1X authentication |

**Default** Order is determined by the authentication methods configured on the interface (see **Usage notes**).

**Mode** Interface Configuration for a switch port; or Authentication Profile mode.

**Usage notes** The default authentication order depends on the combination of the authentication methods configured on the interface:

- If auth-mac is configured then auth-mac will be the first method.
- If auth-mac is **not** configured then dot1x will become the first method.

**Examples** To set the two-step authentication order on port1.0.1 for 802.1X authentication and then MAC authentication, use the commands:

```
awplus# configure terminal
awplus(config)# interface port1.0.1
awplus(config-if)# switchport mode access
awplus(config-if)# auth-mac enable
awplus(config-if)# dot1x port-control auto
awplus(config-if)# auth two-step enable
awplus(config-if)# auth two-step order dot1x auth-mac
```

To reset the two-step authentication order back to the default, which would be MAC authentication then 802.1X authentication if configured as above, use the commands:

```
awplus# configure terminal
awplus(config)# interface port1.0.1
awplus(config-if)# no auth two-step order
```

**Related commands**

auth two-step enable

auth-mac enable

dot1x port-control

show auth interface

show auth supplicant

**Command changes**

Version 5.5.0-0.3: command added

# auth-mac accounting

**Overview** Use this command to override the **default** RADIUS accounting method for MAC-based authentication on an interface by allowing you to apply a user-defined named list.

Use the **no** variant of this command to remove the named list from the interface and apply the **default** method.

**Syntax**

```
auth-mac accounting {default|<list-name>}
no auth-mac accounting
```

| Parameter | Description |
|---|---|
| `default` | Apply the default accounting method list |
| `<list-name>` | Apply the user-defined named list |

**Default** The **default** method list is applied to an interface by default.

**Mode** Interface Configuration for a static channel, a dynamic (LACP) channel group, or a switch port; or Authentication Profile mode.

**Example** To apply the named list 'vlan10_acct' on the vlan10 interface, use the commands:

```
awplus# configure terminal
awplus(config)# interface vlan10
awplus(config-if)# auth-mac accounting vlan10_acct
```

To remove the named list from the vlan10 interface and set the accounting method back to **default**, use the commands:

```
awplus# configure terminal
awplus(config)# interface vlan10
awplus(config-if)# no auth-mac accounting
```

**Related commands** aaa accounting auth-mac

**Command changes** Version 5.4.8-2.1: Command added to AR2050V, AR3050S, AR4050S

# auth-mac authentication

**Overview**

This command overrides the **default** MAC authentication method on an interface by allowing you to apply a user-defined named list.

Use the **no** variant of this command to remove the named list from the interface and apply the **default** method.

**Syntax**

```
auth-mac authentication {default|<list-name>}
no auth-mac authentication
```

| Parameter | Description |
|---|---|
| `default` | Apply the default authentication method list |
| `<list-name>` | Apply a user-defined named list |

**Default**

The **default** method list is applied to an interface by default.

**Mode**

Interface Configuration for a static channel, a dynamic (LACP) channel group, or a switch port; or Authentication Profile mode.

**Example**

To apply the named list 'vlan10_auth' on the vlan10 interface, use the commands:

```
awplus# configure terminal
awplus(config)# interface vlan10
awplus(config-if)# auth-mac authentication vlan10_auth
```

To remove the named list from the vlan10 interface and set the authentication method back to **default**, use the commands:

```
awplus# configure terminal
awplus(config)# interface vlan10
awplus(config-if)# no auth-mac authentication
```

**Related commands**

aaa authentication auth-mac

**Command changes**

Version 5.4.8-2.1: Command added to AR2050V, AR3050S, AR4050S

# auth-mac enable

**Overview** This command enables MAC authentication on the interface specified in the Interface command mode.

Use the **no** variant of this command to disable MAC authentication on an interface.

**Syntax**

```
auth-mac enable
no auth-mac enable
```

**Default** MAC-Authentication is disabled by default.

**Mode** Interface Configuration for a static channel, a dynamic (LACP) channel group, or a switch port; or Authentication Profile mode.

**Usage notes** Enabling **spanning-tree edgeport** on ports after enabling MAC authentication avoids unnecessary re-authentication when the port state changes, which does not happen when spanning tree edgeport is enabled. Note that re-authentication is correct behavior without **spanning-tree edgeport** enabled.

Applying **switchport mode access** on ports is also good practice to set the ports to access mode with ingress filtering turned on, whenever ports for MAC authentication are in a VLAN.

If you attempt to change the authentication configuration on an interface that has threat protection quarantine configured, you will see the following error message:

```
% portx.x.x: Application Proxy quarantine configuration must be
removed before port authentication is changed
```

Before changing the interface's authentication configuration you must either:

- remove the interface's threat protection configuration, or
- shut down the interface.

**Examples** To enable MAC authentication on interface port1.0.2 and enable spanning tree edgeport to avoid unnecessary re-authentication, use the following commands:

```
awplus# configure terminal
awplus(config)# interface port1.0.2
awplus(config-if)# auth-mac enable
awplus(config-if)# spanning-tree edgeport
awplus(config-if)# switchport mode access
```

To disable MAC authentication on interface port1.0.2, use the following commands:

```
awplus# configure terminal
awplus(config)# interface port1.0.2
awplus(config-if)# no auth-mac enable
```

To enable MAC authentication on authentication profile 'student', use the commands:

```
awplus# configure terminal
awplus(config)# auth profile student
awplus(config-auth-profile)# auth-mac enable
```

**Related commands**

auth profile (global)

show auth

show auth interface

show running-config

**Command changes**

Version 5.4.8-2.1: Command added to AR2050V, AR3050S, AR4050S

# auth-mac method

**Overview**

This command sets the type of authentication method for MAC authentication that is used with RADIUS on the interface specified in the interface command mode.

The **no** variant of this command resets the authentication method used to the default method (PAP) as the RADIUS authentication method used by the MAC authentication.

**Syntax**

```
auth-mac method [eap-md5|pap]
no auth-mac method
```

| Parameter | Description |
|---|---|
| eap-md5 | Enable EAP-MD5 as the authentication method. |
| pap | Enable PAP as the authentication method. |

**Default**

The MAC authentication method is PAP.

**Mode**

Interface Configuration for a static channel, a dynamic (LACP) channel group, or a switch port; or Authentication Profile mode.

**Examples**

To set the MAC authentication method to PAP on interface port1.0.2, use the following commands:

```
awplus# configure terminal
awplus(config)# interface port1.0.2
awplus(config-if)# auth-mac method pap
```

To set the MAC authentication method to the default on interface port1.0.2, use the following commands:

```
awplus# configure terminal
awplus(config)# interface port1.0.2
awplus(config-if)# no auth-mac method
```

To set the MAC authentication method to EAP-MD5 on authentication profile 'student', use the commands:

```
awplus# configure terminal
awplus(config)# auth profile student
awplus(config-auth-profile)# auth-mac method eap-md5
```

**Related commands**

auth profile (global)

show auth

show auth interface

show running-config

**Command changes**

Version 5.4.8-2.1: Command added to AR2050V, AR3050S, AR4050S

# auth-mac password

**Overview**

This command changes the password for MAC-based authentication.

Use the **no** variant of this command to return the password to its default.

**Syntax**

```
auth-mac [encrypted] password <password>
no auth-mac password
```

| Parameter | Description |
|---|---|
| `auth-mac` | MAC-based authentication |
| `encrypted` | Specify an encrypted password |
| `password` | Configure the password |
| *<password>* | The new password. Passwords can be up to 64 characters in length and can contain any printable characters except:<br>• ?<br>• " (double quotes)<br>• space |

**Default**

By default, the password is the MAC address of the supplicant.

**Mode**

Global Configuration

**Usage notes**

Changing the password increases the security of MAC-based authentication, because the default password is easy for an attacker to discover. This is particularly important if:

- some MAC-based supplicants on the network are intelligent devices, such as computers.

**Examples**

To change the password to verySecurePassword, use the commands:

```
awplus# configure terminal
awplus(config)# auth-mac password verySecurePassword
```

**Related commands**

show auth

**Command changes**

Version 5.4.8-2.1: Command added to AR2050V, AR3050S, AR4050S

# auth-mac reauth-relearning

**Overview**

This command sets the MAC address learning of the supplicant (client device) to re-learning for re-authentication on the interface specified in the interface command mode.

Use the **no** variant of this command to disable the auth-mac re-learning option.

**Syntax**

```
auth-mac reauth-relearning
no auth-mac reauth-relearning
```

**Default**

Re-learning for port authentication is disabled by default.

**Mode**

Interface Configuration for a static channel, a dynamic (LACP) channel group, or a switch port; or Authentication Profile mode.

**Examples**

To enable the re-authentication re-learning feature on interface port1.0.2, use the following commands:

```
awplus# configure terminal
awplus(config)# interface port1.0.2
awplus(config-if)# auth-mac reauth-relearning
```

To disable the re-authentication re-learning feature on interface port1.0.2, use the following commands:

```
awplus# configure terminal
awplus(config)# interface port1.0.2
awplus(config-if)# no auth-mac reauth-relearning
```

To enable the re-authentication re-learning feature on authentication profile 'student', use the commands:

```
awplus# configure terminal
awplus(config)# auth profile student
awplus(config-auth-profile)# auth-mac reauth-relearning
```

**Related commands**

auth profile (global)

show auth

show auth interface

show running-config

**Command changes**

Version 5.4.8-2.1: Command added to AR2050V, AR3050S, AR4050S

# auth-mac static

**Overview**

This command configures MAC authentication to use static entries in the FDB. Static entries persist in the FDB, even if there is no traffic flow from the supplicant.

When static FDB entries are configured, the auth roaming disconnected command is supported for MAC authentication. This command allows a supplicant to move to another authenticating interface without re-authentication.

Use the **no** variant of this command to revert to dynamic FDB entries.

**Syntax**

```
auth-mac static
no auth-mac static
```

**Default**

By default MAC authentication supplicants are added to the FDB dynamically.

**Mode**

Global Configuration

**Example**

To configure MAC authentication to use static FDB entries, use the following commands:

```
awplus# configure terminal
awplus(config)# auth-mac static
```

To configure MAC authentication to use dynamic FDB entries, use the following commands:

```
awplus# configure terminal
awplus(config)# no auth-mac static
```

**Related commands**

auth roaming disconnected

show auth

**Command changes**

Version 5.4.7-2.4: Command added

Version 5.4.8-2.1: Command added to AR2050V, AR3050S, AR4050S

# auth-mac username

**Overview** Use this command to specify the format of the MAC address in the username and password field when a request for MAC-based authorization is sent to a RADIUS server.

**Syntax**

```
auth-mac username {ietf|unformatted} {lower-case|upper-case}
```

| Parameter | Description |
|---|---|
| `ietf` | The MAC address includes a hyphen between each 2 bytes. (Example: xx-xx-xx-xx-xx-xx) |
| `unformatted` | The MAC address does not include hyphens. (Example: xxxxxxxxxxxx) |
| `lower-case` | The MAC address uses lower-case characters (a-f) |
| `upper-case` | The MAC address uses upper-case characters (A-F) |

**Default**

```
auth-mac username ietf lower-case
```

**Mode** Global Configuration

**Usage** This command is provided to allow other vendors', AlliedWare, and AlliedWare Plus switches to share the same format on the RADIUS server.

**Example** To configure the format of the MAC address in the username and password field to be changed to IETF and upper-case, use the following commands:

```
awplus# configure terminal
awplus(config)# auth-mac username ietf upper-case
```

**Related commands**

auth-mac username

show running-config

**Command changes** Version 5.4.8-2.1: Command added to AR2050V, AR3050S, AR4050S

# auth-web accounting

**Overview** This command overrides the default RADIUS accounting method for web-based authentication on an interface by allowing you to apply a user-defined named list.

Use the **no** variant of this command to remove the named list from the interface and apply the default method.

**Syntax**

```
auth-web accounting {default|<list-name>}
no auth-web accounting
```

| Parameter | Description |
|---|---|
| `default` | Apply the default accounting method list |
| `<list-name>` | Apply a named accounting method list |

**Default** The **default** method list is applied to an interface by default.

**Mode** Interface Configuration for an Eth interface, or Authentication Profile mode.

**Example** To apply the named list 'example_acct' on the eth1 interface, use the commands:

```
awplus# configure terminal
awplus(config)# interface eth1
awplus(config-if)# auth-web accounting example_acct
```

To remove the named list from the eth1 interface and set the accounting method back to default, use the commands:

```
awplus# configure terminal
awplus(config)# interface eth1
awplus(config-if)# no auth-web accounting
```

**Related commands** aaa accounting auth-web

# auth-web authentication

**Overview** Use this command to override the default web-based authentication method on an interface by allowing you to apply a user-defined named list.

Use the **no** variant of this command to remove the named list from the interface and apply the default method.

**Syntax**

```
auth-web authentication {default|<list-name>}
no auth-web authentication
```

| Parameter | Description |
|---|---|
| `default` | Apply the default authentication method list |
| `<list-name>` | Apply the user-defined named list |

**Default** The **default** method list is applied to an interface by default.

**Mode** Interface Configuration for an Eth interface, or Authentication Profile mode.

**Example** To apply the named list 'example_auth' on the eth1 interface, use the commands:

```
awplus# configure terminal
awplus(config)# interface eth1
awplus(config-if)# auth-web authentication example_auth
```

To remove the named list from the eth1 interface and set the authentication method back to default, use the commands:

```
awplus# configure terminal
awplus(config)# interface eth1
awplus(config-if)# no auth-web authentication
```

**Related commands** aaa authentication auth-web

# auth-web enable

**Overview** Use this command to enable web-based authentication in Interface mode on the interface specified.

Use the **no** variant of this command to apply its default.

**Syntax**

```
auth-web enable
no auth-web enable
```

**Default** Web authentication is disabled by default.

**Mode** Interface Configuration for an Eth interface, or Authentication Profile mode.

**Usage notes** You need to configure an IPv4 address for the Ethernet interface on which Web Authentication is running.

When the **protect (firewall)** command and the **web-auth enable** command are both configured, you need to configure a firewall rule to allow Auth-web traffic to pass through the firewall. Web-auth uses TCP ports 8081, 8082, 8083 and 8084. You can create a firewall rule like the following example:

```
!
application auth-apl
protocol tcp
dport 8081 to 8084
!
!
firewall
  rule 65 permit auth-apl from private.supplicant to
private.supplicant.router
!
```

If you attempt to change the authentication configuration on an interface that has threat protection quarantine configured, you will see the following error message:

```
% portx.x.x: Application Proxy quarantine configuration must be
removed before port authentication is changed
```

Before changing the interface's authentication configuration you must either:

- remove the interface's threat protection configuration, or
- shut down the interface.

**Examples** To enable web authentication on eth1, use the following commands:

```
awplus# configure terminal
awplus(config)# interface eth1
awplus(config-if)# auth-web enable
```

To disable web authentication on eth1, use the following commands:

```
awplus# configure terminal
awplus(config)# interface eth1
awplus(config-if)# no auth-web enable
```

To enable web authentication on authentication profile 'student', use the commands:

```
awplus# configure terminal
awplus(config)# auth profile student
awplus(config-auth-profile)# auth-web enable
```

To disable web authentication on authentication profile 'student', use the commands:

```
awplus# configure terminal
awplus(config)# auth profile student
awplus(config-auth-profile)# no auth-web enable
```

**Related commands**

auth profile (global)

show auth

show auth interface

show running-config

# auth-web forward

**Overview** Use this command to enable the web authentication packet forwarding feature on the interface specified. This command also enables ARP forwarding, and adds forwarded packets to the **tcp** or **udp** port number specified.

Use the **no** variant of this command to disable the specified packet forwarding feature on the interface.

**Syntax**

```
auth-web forward [<ip-address>|<ip-address/prefix-length>]
{dns|tcp <1-65535>|udp <1-65535>}
```

or

```
auth-web forward {arp|dhcp|dns|tcp <1-65535>|udp <1-65535>}
```

The **no** variants of this command are:

```
no auth-web forward [<ip-address>|<ip-address/prefix-length>]
{dns|tcp <1-65535>|udp <1-65535>}
```

or

```
no auth-web forward {arp|dhcp|dns|tcp <1-65535>|udp <1-65535>}
```

| Parameter | Description |
|---|---|
| *<ip-address>* *<ip-address/prefix-length>* | The IP address or subnet on which the web authentication is to be enabled. |
| arp | Enable forwarding of ARP. |
| dhcp | Enable forwarding of DHCP (67/udp). |
| dns | Enable forwarding of DNS (53/udp). |
| tcp | Enable forwarding of TCP specified port number. |
| <1-65535> | TCP Port number. |
| udp | Enable forwarding of UDP specified port number. |
| <1-65535> | UDP Port number. |

**Default** Packet forwarding for port authentication is enabled by default for “arp”, “dhcp” and “dns”.

**Mode** Interface Configuration for an Eth interface, or Authentication Profile mode.

**Usage notes** For more information about the *<ip-address>* parameter, and an example, see the “auth-web forward” section in the Alliedware Plus Technical Tips and Tricks.

**Examples** To enable the ARP forwarding feature on interface eth1, use the following commands:

```
awplus# configure terminal
awplus(config)# interface eth1
awplus(config-if)# auth-web forward arp
```

To add TCP forwarding port 137 on interface eth1, use the following commands:

```
awplus# configure terminal
awplus(config)# interface eth1
awplus(config-if)# auth-web forward tcp 137
```

To disable the ARP forwarding feature on interface eth1, use the following commands:

```
awplus# configure terminal
awplus(config)# interface eth1
awplus(config-if)# no auth-web forward arp
```

To delete TCP forwarding port 137 on interface eth1, use the following commands:

```
awplus# configure terminal
awplus(config)# interface eth1
awplus(config-if)# no auth-web forward tcp 137
```

To delete all TCP forwarding on interface eth1, use the following commands:

```
awplus# configure terminal
awplus(config)# interface eth1
awplus(config-if)# no auth-web forward tcp
```

To enable the ARP forwarding feature on authentication profile 'student', use the commands:

```
awplus# configure terminal
awplus(config)# auth profile student
awplus(config-auth-profile)# auth-web forward arp
```

To add TCP forwarding port 137 on authentication profile 'student', use the commands:

```
awplus# configure terminal
awplus(config)# auth profile student
awplus(config-auth-profile)# auth-web forward tcp 137
```

To disable the ARP forwarding feature on authentication profile 'student', use the commands:

```
awplus# configure terminal
awplus(config)# auth profile student
awplus(config-auth-profile)# no auth-web forward arp
```

To delete TCP forwarding port 137 on authentication profile 'student', use the commands:

```
awplus# configure terminal
awplus(config)# auth profile student
awplus(config-auth-profile)# no auth-web forward tcp 137
```

To delete all TCP forwarding on authentication profile 'student', use the commands:

```
awplus# configure terminal
awplus(config)# auth profile student
awplus(config-auth-profile)# no auth-web forward tcp
```

**Related commands**

auth profile (global)

show auth

show auth interface

# auth-web idle-timeout enable

**Overview**

Use this command to enable the idle-timeout for client of web authentication on the interface.

The **no** variant of this command to disable the idle-timeout for client of web authentication on the interface.

**Syntax**

```
auth-web idle-timeout enable
no auth-web idle-timeout enable
```

**Default**

The idle-timeout is disabled by default.

**Mode**

Interface Configuration for an Eth interface, or Authentication Profile mode.

**Example**

To enable the idle-timeout on an interface, use the following commands:

```
awplus# configure terminal
awplus(config)# interface eth1
awplus(config)# auth-web enable
awplus(config-if)# auth-web idle-timeout enable
```

To disable the idle-timeout on an interface, use the following commands:

```
awplus# configure terminal
awplus(config)# interface eth1
awplus(config-if)# no auth-web idle-timeout enable
```

**Related commands**

auth-web enable

auth-web idle-timeout timeout

# auth-web idle-timeout timeout

**Overview**

Use this command to set the timeout value for web authentication client in seconds. The client will be unauthorized when it does not have any activity for a period that exceeds the timeout value.

The **no** variant of this command sets the timeout value to the default setting, 3600 seconds.

**Syntax**

```
auth-web idle-timeout timeout <420-86400>
no auth-web idle-timeout timeout
```

| Parameter | Description |
|---|---|
| *<420-86400>* | Time in seconds. |

**Default**

The timeout is 3600 seconds by default.

**Mode**

Interface Configuration for an Eth interface, or Authentication Profile mode.

**Example**

To set 30 minutes as the idle-timeout, use the following commands:

```
awplus# configure terminal
awplus(config)# interface eth1
awplus(config-if)# auth-web idle-timeout timeout 1800
```

To return the idle-timeout to the default, use the following commands:

```
awplus# configure terminal
awplus(config)# interface eth1
awplus(config-if)# no auth-web idle-timeout timeout
```

**Related commands**

auth-web enable

auth-web idle-timeout enable

# auth-web max-auth-fail

**Overview** Use this command to set the number of authentication failures allowed before rejecting further authentication requests. When the supplicant (client device) fails more than the specified number of times, then login requests are refused during the quiet period.

Use the **no** variant of this command to reset the maximum number of authentication failures to the default.

**Syntax**

```
auth-web max-auth-fail <0-10>
no auth-web max-auth-fail
```

| Parameter | Description |
|---|---|
| *<0-10>* | The maximum number of authentication failures allowed before login requests are refused. |

**Default** The maximum number of authentication failures is set to 3.

**Mode** Interface Configuration for an Eth interface, or Authentication Profile mode.

**Examples** To set the lock count to 5 on interface eth1, use the following commands:

```
awplus# configure terminal
awplus(config)# interface eth1
awplus(config-if)# auth-web max-auth-fail 5
```

To set the lock count to the default on interface eth1, use the following commands:

```
awplus# configure terminal
awplus(config)# interface eth1
awplus(config-if)# no auth-web max-auth-fail
```

To set the lock count to 5 on authentication profile 'student', use the commands:

```
awplus# configure terminal
awplus(config)# auth profile student
awplus(config-auth-profile)# auth-web max-auth-fail 5
```

To set the lock count to the default on authentication profile 'student', use the commands:

```
awplus# configure terminal
awplus(config)# auth profile student
awplus(config-auth-profile)# no auth-web max-auth-fail
```

**Related commands**

auth profile (global)

auth timeout quiet-period

show auth

show auth interface

show running-config

# auth-web method

**Overview** Use this command to set the web authentication access method that is used with RADIUS on the interface specified.

Use the **no** variant of this command to set the authentication method to PAP for the interface specified when web authentication is also used with the RADIUS authentication method.

**Syntax**

```
auth-web method {eap-md5|pap}
no auth-web method
```

| Parameter | Description |
|---|---|
| eap-md5 | Enable EAP-MD5 as the authentication method. |
| pap | Enable PAP as the authentication method. |

**Default** The web authentication method is set to PAP by default.

**Mode** Interface Configuration for an Eth interface, or Authentication Profile mode.

**Example** To set the web authentication method to EAP-MD5 on interface eth1, use the following commands:

```
awplus# configure terminal
awplus(config)# interface eth1
awplus(config-if)# auth-web method eap-md5
```

To set the web authentication method to EAP-MD5 for authentication profile 'student', use the commands:

```
awplus# configure terminal
awplus(config)# auth profile student
awplus(config-auth-profile)# auth-web method eap-md5
```

**Related commands**

auth profile (global)

show auth

show auth interface

show running-config

# auth-web-server dhcp ipaddress

**Overview**

Use this command to assign an IP address and enable the DHCP service on the Web-Authentication server for supplicants (client devices).

Use the **no** variant of this command to remove an IP address and disable the DHCP service on the Web-Authentication server for supplicants.

**Syntax**

```
auth-web-server dhcp ipaddress <ip-address/prefix-length>
no auth-web-server dhcp ipaddress
```

| Parameter | Description |
|---|---|
| *<ip-addr/prefix-length>* | The IPv4 address and prefix length assigned for the DHCP service on the Web-Authentication server for supplicants. |

**Default**

No IP address for the Web-Authentication server is set by default.

**Mode**

Global Configuration

**Usage notes**

See the AAA and Port Authentication Feature Overview and Configuration Guide for information about:

- using DHCP with web authentication, and
- restrictions regarding combinations of authentication enhancements working together

You cannot use the IPv4 address assigned to the device's interface as the Web-Authentication server address.

**Examples**

To assign the IP address 10.0.0.1 to the Web-Authentication server, use the following commands:

```
awplus# configure terminal
awplus(config)# auth-web-server dhcp ipaddress 10.0.0.1/8
```

To remove an IP address on the Web-Authentication server, use the following commands:

```
awplus# configure terminal
awplus(config)# no auth-web-server dhcp ipaddress
```

**Related commands**

auth-web-server dhcp lease

show auth-web-server

show running-config

# auth-web-server dhcp lease

**Overview**

Use this command to set the DHCP lease time for supplicants (client devices) using the DHCP service on the Web-Authentication server.

Use the **no** variant of this command to reset to the default DHCP lease time for supplicants using the DHCP service on the Web-Authentication server.

**Syntax**

```
auth-web-server dhcp lease <20-60>
no auth-web-server dhcp lease
```

| Parameter | Description |
|---|---|
| *<20-60>* | DHCP lease time for supplicants using the DHCP service on the Web-Authentication server in seconds. |

**Default**

The default DHCP lease time for supplicants using the DHCP service on the Web-Authentication server is set to 30 seconds.

**Mode**

Global Configuration

**Usage notes**

See the AAA and Port Authentication Feature Overview and Configuration Guide for information about:

- using DHCP with web authentication, and
- restrictions regarding combinations of authentication enhancements working together

**Examples**

To set the DHCP lease time to 1 minute for supplicants using the DHCP service on the Web-Authentication server, use the following commands:

```
awplus# configure terminal
awplus(config)# auth-web-server dhcp lease 60
```

To reset the DHCP lease time to the default setting (30 seconds) for supplicants using the DHCP service on the Web-Authentication server, use the following commands:

```
awplus# configure terminal
awplus(config)# no auth-web-server dhcp lease
```

**Validation Commands**

show running-config

**Related commands**

show auth-web-server

auth-web-server dhcp ipaddress

# auth-web-server dhcp-wpad-option

**Overview**

This command sets the DHCP WPAD (Web Proxy Auto-Discovery) option for the Web-Authentication temporary DHCP service.

For more information and examples, see the "Web Auth Proxy" section in the Alliedware Plus Technical Tips and Tricks.

Use the **no** variant of this command to disable the DHCP WPAD function.

**Syntax**

```
auth-web-server dhcp wpad-option <url>
no auth-web-server dhcp wpad-option
```

| Parameter | Description |
|---|---|
| *<url>* | URL to the server which gets a .pac file. |

**Default**

The Web-Authentication server DHCP WPAD option is not set.

**Mode**

Global Configuration

**Usage notes**

If the supplicant is configured to use WPAD, the supplicant's web browser will use TCP port 80 as usual. Therefore, the packet can be intercepted by Web-Authentication as normal, and the Web-Authentication Login page can be sent. However, after authentication, the browser does not know where to get the WPAD file and so cannot access external web pages. The WPAD file is usually named proxy.pac file and tells the browser what web proxy to use.

Use this command to tell the supplicant where it can get this file from. The switch itself can be specified as the source for this file, and it can deliver it to the supplicant on request.

**Example**

To specify that the proxy.pac file is found on the server at 192.168.1.100, use the following commands:

```
awplus# configure terminal
awplus(config)# auth-web-server dhcp wpad-option
http://192.168.1.100/proxy/proxy.pac
```

**Related commands**

show auth-web-server

# auth-web-server host-name

**Overview**

This command assigns a hostname to the web authentication server.

Use the **no** variant of this command to remove the hostname from the web authentication server.

**Syntax**

```
auth-web-server host-name <hostname>
no auth-web-server host-name
```

| Parameter | Description |
|---|---|
| *<hostname>* | URL string of the hostname |

**Default**

The web authentication server has no hostname.

**Mode**

Global Configuration

**Usage notes**

When the web authentication server uses HTTPS protocol, the web browser will validate the certificate. If the certificate is invalid, the web page gives a warning message before displaying server content. However, the web page will not give warning message if the server has a hostname same as the one stored in the installed certificate.

**Examples**

To set the auth.example.com as the hostname of the web authentication server, use the commands:

```
awplus# configure terminal
awplus(config)# auth-web-server host-name auth.example.com
```

To remove hostname auth.example.com from the web authentication server, use the commands:

```
awplus# configure terminal
awplus(config)# no auth-web-server host-name
```

**Related commands**

aaa authentication auth-web

auth-web enable

# auth-web-server intercept-port

**Overview**

This command specifies any additional TCP port numbers that the Web-Authentication server is to intercept.

Use the **no** variant of this command to stop intercepting the TCP port numbers.

**Syntax**

```
auth-web-server intercept-port {<1-65535>|any}
no auth-web-server intercept-port {<1-65535>|any}
```

| Parameter | Description |
|---|---|
| *<1-65535>* | TCP port number. |
| any | Intercept all TCP packets |

**Default**

No additional TCP port numbers are intercepted by default.

**Mode**

Global Configuration

**Usage notes**

If this command is not specified, AlliedWare Plus Web-Authentication intercepts the supplicant's initial TCP port 80 connection to a web page and sends it the Web-Authentication Login page. However, if the supplicant is configured to use a web proxy, then it will usually be using TCP port 8080 (or another user configured port number). In this case Web-Authentication cannot intercept the connection.

To overcome this limitation you can use this command to tell the switch which additional port it should intercept, and then send the Web-Authentication Login page to the supplicant.

When the web authentication switch is in a guest network, the switch does not know the proxy server's port number in the supplicant's proxy setting. To overcome this limitation, you can use the **any** option in this command to intercept all TCP packets.

When you use this command in conjunction with a proxy server configured in the web browser, you must add the proxy server's network as a 'No Proxy' network. You can specify 'No Proxy' networks in the proxy settings in your web browser. For more information, see the "Web Auth Proxy" section in the Alliedware Plus Technical Tips and Tricks.

**Example**

To additionally intercept port number 3128, use the following commands:

```
awplus# configure terminal
awplus(config)# auth-web-server intercept-port 3128
```

**Related commands**

show auth-web-server

# auth-web-server ipaddress

**Overview**

This command sets the IP address for the Web-Authentication server.

Use the **no** variant of this command to delete the IP address for the Web-Authentication server.

You cannot use the IPv4 address assigned to the device's interface as the Web-Authentication server address.

**Syntax**

```
auth-web-server ipaddress <ip-address>
no auth-web-server ipaddress
```

| Parameter | Description |
|---|---|
| *<ip-address>* | Web-Authentication server dotted decimal IP address in A.B.C.D format. |

**Default**

The Web-Authentication server address on the system is not set by default.

**Mode**

Global Configuration

**Examples**

To set the IP address `10.0.0.1` to the Web-Authentication server, use the following commands:

```
awplus# configure terminal
awplus(config)# auth-web-server ipaddress 10.0.0.1
```

To delete the IP address from the Web-Authentication server, use the following commands:

```
awplus# configure terminal
awplus(config)# no auth-web-server ipaddress
```

**Validation Commands**

show auth

show auth-web-server

show running-config

# auth-web-server page language

**Overview**

Use this command to set the presentation language of Web authentication pages. Titles and subtitles of Web authentication pages will be set accordingly. Note that presently only English or Japanese are offered.

Use the **no** variant of this command to set the presentation language of Web authentication pages to its default (English).

**Syntax**

```
auth-web-server page language {english|japanese}
no auth-web-server page language
```

| Parameter | Description |
|---|---|
| english | Web authentication pages are presented in English. |
| japanese | Web authentication pages are presented in Japanese. |

**Default**

Web authentication pages are presented in English by default.

**Mode**

Global Configuration

**Examples**

To set Japanese as the presentation language of Web authentication pages, use the following commands:

```
awplus# configure terminal
awplus(config)# auth-web-server page language japanese
```

To set English as the presentation language of Web authentication pages, use the following commands:

```
awplus# configure terminal
awplus(config)# auth-web-server page language english
```

To unset the presentation language of Web authentication pages and use English as the default presentation language, use the following commands:

```
awplus# configure terminal
awplus(config)# no auth-web-server page language
```

**Related commands**

auth-web-server page title

auth-web-server page sub-title

show auth-web-server page

# auth-web-server login-url

**Overview** This command sets the web-authentication login page URL. This lets you replace the login page with your own page. See "Customising the Login Page" in the AAA and Port Authentication Feature Overview and Configuration Guide for details.

Use the **no** variant of this command to delete the URL.

**Syntax**

```
auth-web-server login-url <URL>
no auth-web-server login-url
```

| Parameter | Description |
|---|---|
| *<URL>* | Set login page URL |

**Default** The built-in login page is set by default.

**Mode** Global Configuration

**Examples** To set http://example.com/login.html as the login page, use the commands:

```
awplus# configure terminal
awplus(config)# auth-web-server login-url
http://example.com/login.html
```

To unset the login page URL, use the commands:

```
awplus# configure terminal
awplus(config)# no auth-web-server login-url
```

**Related commands** show running-config

# auth-web-server page logo

**Overview**

This command sets the type of logo that will be displayed on the web authentication page.

Use the **no** variant of this command to set the logo type to **auto**.

Note that if you need to customize the login page extensively, you can instead replace it with your own page. See "Customising the Login Page" in the AAA and Port Authentication Feature Overview and Configuration Guide.

**Syntax**

```
auth-web-server page logo {auto|default|hidden}
no auth-web-server page logo
```

| Parameter | Description |
|---|---|
| `auto` | Display the custom logo if installed; otherwise display the default logo |
| `default` | Display the default logo |
| `hidden` | Hide the logo |

**Default**

Logo type is **auto** by default.

**Mode**

Global Configuration

**Examples**

To display the default logo with ignoring installed custom logo, use the commands:

```
awplus# configure terminal
awplus(config)# auth-web-server page logo default
```

To set back to the default logo type **auto**, use the commands:

```
awplus# configure terminal
awplus(config)# no auth-web-server page logo
```

**Validation Commands**

show auth-web-server page

# auth-web-server page sub-title

**Overview**

This command sets the custom sub-title on the web authentication page.

Use the **no** variant of this command to reset the sub-title to its default.

Note that if you need to customize the login page extensively, you can instead replace it with your own page. See "Customising the Login Page" in the AAA and Port Authentication Feature Overview and Configuration Guide.

**Syntax**

```
auth-web-server page sub-title {hidden|text <sub-title>}
no auth-web-server page sub-title
```

| Parameter | Description |
|---|---|
| `hidden` | Hide the sub-title |
| *<sub-title>* | Text string of the sub-title |

**Default**

"Allied-Telesis" is displayed by default.

**Mode**

Global Configuration

**Examples**

To set the custom sub-title, use the commands:

```
awplus# configure terminal
awplus(config)# auth-web-server page sub-title text Web
Authentication
```

To hide the sub-title, use the commands:

```
awplus# configure terminal
awplus(config)# auth-web-server page sub-title hidden
```

To change back to the default title, use the commands:

```
awplus# configure terminal
awplus(config)# no auth-web-server page sub-title
```

**Validation Commands**

show auth-web-server page

# auth-web-server page success-message

**Overview**

This command sets the success message on the web-authentication page.

Use the **no** variant of this command to remove the success message.

Note that if you need to customize the login page extensively, you can instead replace it with your own page. See "Customising the Login Page" in the AAA and Port Authentication Feature Overview and Configuration Guide.

**Syntax**

```
auth-web-server page success-message text <success-message>
no auth-web-server page success-message
```

| Parameter | Description |
|---|---|
| *<success-message>* | Text string of the success message |

**Default**

No success message is set by default.

**Mode**

Global Configuration

**Examples**

To set the success message on the web-authentication page, use the commands:

```
awplus# configure terminal
awplus(config)# auth-web-server page success-message text Your
success message
```

To unset the success message on the web-authentication page, use the commands:

```
awplus# configure terminal
awplus(config)# no auth-web-server page success-message
```

**Validation Commands**

show auth-web-server page

# auth-web-server page title

**Overview**

This command sets the custom title on the web authentication page.

Use the **no** variant of this command to remove the custom title.

Note that if you need to customize the login page extensively, you can instead replace it with your own page. See "Customising the Login Page" in the AAA and Port Authentication Feature Overview and Configuration Guide.

**Syntax**

```
auth-web-server page title {hidden|text <title>}
no auth-web-server page title
```

| Parameter | Description |
|---|---|
| `hidden` | Hide the title |
| `<title>` | Text string of the title |

**Default**

"Web Access Authentication Gateway" is displayed by default.

**Mode**

Global Configuration

**Examples**

To set the custom title on the web authentication page, use the commands:

```
awplus# configure terminal
awplus(config)# auth-web-server page title text Login
```

To hide the title on the web authentication page, use the commands:

```
awplus# configure terminal
awplus(config)# auth-web-server page title hidden
```

To unset the custom title on the web authentication page, use the commands:

```
awplus# configure terminal
awplus(config)# no auth-web-server page title
```

**Validation Commands**

show auth-web-server page

# auth-web-server page welcome-message

**Overview**

This command sets the welcome message on the web-authentication login page.

Use the **no** variant of this command to remove the welcome message.

Note that if you need to customize the login page extensively, you can instead replace it with your own page. See "Customising the Login Page" in the AAA and Port Authentication Feature Overview and Configuration Guide.

**Syntax**

```
auth-web-server page welcome-message text <welcome-message>
no auth-web-server page welcome-message
```

| Parameter | Description |
|---|---|
| *<welcome-message>* | Text string of the welcome message |

**Default**

No welcome message is set by default.

**Mode**

Global Configuration

**Examples**

To set the welcome message on the web-authentication page, use the commands:

```
awplus# configure terminal
awplus(config)# auth-web-server page welcome-message text Your
welcome message
```

To remove the welcome message on the web-authentication page, use the commands:

```
awplus# configure terminal
awplus(config)# no auth-web-server page welcome-message
```

**Validation Commands**

show auth-web-server page

# auth-web-server ping-poll enable

**Overview**

This command enables the ping polling to the supplicant (client device) that is authenticated by Web-Authentication.

The **no** variant of this command disables the ping polling to the supplicant that is authenticated by Web-Authentication.

**Syntax**

```
auth-web-server ping-poll enable
no auth-web-server ping-poll enable
```

**Default**

The ping polling feature for Web-Authentication is disabled by default.

**Mode**

Global Configuration

**Examples**

To enable the ping polling feature for Web-Authentication, use the following commands:

```
awplus# configure terminal
awplus(config)# auth-web-server ping-poll enable
```

To disable the ping polling feature for Web-Authentication, use the following commands:

```
awplus# configure terminal
awplus(config)# no auth-web-server ping-poll enable
```

**Validation Commands**

show auth

show auth-web-server

show running-config

# auth-web-server ping-poll failcount

**Overview**

This command sets a fail count for the ping polling feature when used with Web-Authentication. The **failcount** parameter specifies the number of unanswered pings. A supplicant (client device) is logged off when the number of unanswered pings are greater than the failcount set with this command.

Use the **no** variant of this command to resets the fail count for the ping polling feature to the default (5 pings).

**Syntax**

```
auth-web-server ping-poll failcount <1-100>
no auth-web-server ping-poll failcount
```

| Parameter | Description |
|---|---|
| *<1-100>* | Count. |

**Default**

The default failcount for ping polling is 5 pings.

**Mode**

Global Configuration

**Examples**

To set the failcount of ping polling to `10` pings, use the following commands:

```
awplus# configure terminal
awplus(config)# auth-web-server ping-poll failcount 10
```

To set the failcount of ping polling to default, use the following commands:

```
awplus# configure terminal
awplus(config)# no auth-web-server ping-poll failcount
```

**Validation Commands**

show auth

show auth-web-server

show running-config

# auth-web-server ping-poll interval

**Overview**

This command is used to change the ping poll interval. The interval specifies the time period between pings when the supplicant (client device) is reachable.

Use the **no** variant of this command to reset to the default period for ping polling (30 seconds).

**Syntax**

```
auth-web-server ping-poll interval <1-65535>
no auth-web-server ping-poll interval
```

| Parameter | Description |
|---|---|
| *<1-65535>* | Seconds. |

**Default**

The interval for ping polling is 30 seconds by default.

**Mode**

Global Configuration

**Examples**

To set the interval of ping polling to 60 seconds, use the following commands:

```
awplus# configure terminal
awplus(config)# auth-web-server ping-poll interval 60
```

To set the interval of ping polling to the default (30 seconds), use the following commands:

```
awplus# configure terminal
awplus(config)# no auth-web-server ping-poll interval
```

**Validation Commands**

show auth

show auth-web-server

show running-config

# auth-web-server ping-poll reauth-timer-refresh

**Overview**

This command modifies the **reauth-timer-refresh** parameter for the Web-Authentication feature. The **reauth-timer-refresh** parameter specifies whether a re-authentication timer is reset and when the response from a supplicant (a client device) is received.

Use the **no** variant of this command to reset the **reauth-timer-refresh** parameter to the default setting (disabled).

**Syntax**

```
auth-web-server ping-poll reauth-timer-refresh
no auth-web-server ping-poll reauth-timer-refresh
```

**Default**

The `reauth-timer-refresh` parameter is disabled by default.

**Mode**

Global Configuration

**Examples**

To enable the `reauth-timer-refresh` timer, use the following commands:

```
awplus# configure terminal
awplus(config)# auth-web-server ping-poll reauth-timer-refresh
```

To disable the `reauth-timer-refresh` timer, use the following commands:

```
awplus# configure terminal
awplus(config)# no auth-web-server ping-poll
reauth-timer-refresh
```

**Validation Commands**

show auth

show auth-web-server

show running-config

# auth-web-server ping-poll timeout

**Overview**

This command modifies the ping poll **timeout** parameter for the Web-Authentication feature. The **timeout** parameter specifies the time in seconds to wait for a response to a ping packet.

Use the **no** variant of this command to reset the timeout of ping polling to the default (1 second).

**Syntax**

```
auth-web-server ping-poll timeout <1-30>
no auth-web-server ping-poll timeout
```

| Parameter | Description |
|---|---|
| *<1-30>* | Seconds. |

**Default**

The default timeout for ping polling is 1 second.

**Mode**

Global Configuration

**Examples**

To set the timeout of ping polling to 2 seconds, use the command:

```
awplus# configure terminal
awplus(config)# auth-web-server ping-poll timeout 2
```

To set the timeout of ping polling to the default (1 second), use the command:

```
awplus# configure terminal
awplus(config)# no auth-web-server ping-poll timeout
```

**Validation Commands**

show auth

show auth-web-server

show running-config

# auth-web-server port

**Overview**

This command sets the HTTP port number for the Web-Authentication server.

Use the **no** variant of this command to reset the HTTP port number to the default (80).

**Syntax**

```
auth-web-server port <port-number>
no auth-web-server port
```

| Parameter | Description |
|---|---|
| *<port-number>* | Set the local Web-Authentication server port within the TCP port number range 1 to 65535. |

**Default**

The Web-Authentication server HTTP port number is set to 80 by default.

**Mode**

Global Configuration

**Examples**

To set the HTTP port number 8080 for the Web-Authentication server, use the following commands:

```
awplus# configure terminal
awplus(config)# auth-web-server port 8080
```

To reset to the default HTTP port number 80 for the Web-Authentication server, use the following commands:

```
awplus# configure terminal
awplus(config)# no auth-web-server port
```

**Validation Commands**

show auth

show auth-web-server

show running-config

# auth-web-server redirect-delay-time

**Overview** Use this command to set the delay time in seconds before redirecting the supplicant to a specified URL when the supplicant is authorized.

Use the variant **no** to reset the delay time set previously.

**Syntax**

```
auth-web-server redirect-delay-time <5-60>
no auth-web-server redirect-delay-time
```

| Parameter | Description |
|---|---|
| `redirect-delay-time` | Set the delay time before jumping to a specified URL after the supplicant is authorized. |
| *<5-60>* | The time in seconds. |

**Default** The default redirect delay time is 5 seconds.

**Mode** Global Configuration

**Examples** To set the delay time to 60 seconds for the Web-Authentication server, use the following commands:

```
awplus# configure terminal
awplus(config)# auth-web-server redirect-delay-time 60
```

To reset the delay time, use the following commands:

```
awplus# configure terminal
awplus(config)# no auth-web-server redirect-delay-time
```

**Related commands**

auth-web-server redirect-url

show auth-web-server

show running-config

# auth-web-server redirect-url

**Overview**

This command sets a URL for supplicant (client device) authentication. When a supplicant is authorized it will be automatically redirected to the specified URL. Note that if the http redirect feature is used then this command is ignored.

Use the **no** variant of this command to delete the URL string set previously.

**Syntax**

```
auth-web-server redirect-url <url>
no auth-web-server redirect-url
```

| Parameter | Description |
|---|---|
| *<url>* | URL (hostname or dotted IP notation). |

**Default**

The redirect URL for the Web-Authentication server feature is not set by default (null).

**Mode**

Global Configuration

**Examples**

To enable and set redirect a URL string www.alliedtelesis.com for the Web-Authentication server, use the following commands:

```
awplus# configure terminal
awplus(config)# auth-web-server redirect-url
http://www.alliedtelesis.com
```

To delete a redirect URL string, use the following commands:

```
awplus# configure terminal
awplus(config)# no auth-web-server redirect-url
```

**Related commands**

auth-web-server redirect-delay-time

show auth

show auth-web-server

show running-config

# auth-web-server session-keep

**Overview**

This command enables the session-keep feature to jump to the original URL after being authorized by Web-Authentication.

Use the **no** variant of this command to disable the session keep feature.

**Syntax**

```
auth-web-server session-keep
no auth-web-server session-keep
```

**Default**

The session-keep feature is disabled by default.

**Mode**

Global Configuration

**Usage notes**

This function doesn't ensure to keep session information in all cases. Authenticated supplicant may be redirected to unexpected page when session-keep is enabled. This issue occurred by supplicant sending HTTP packets automatically after authentication page is displayed and the URL is written.

**Examples**

To enable the session-keep feature, use the following commands:

```
awplus# configure terminal
awplus(config)# auth-web-server session-keep
```

To disable the session-keep feature, use the following commands:

```
awplus# configure terminal
awplus(config)# no auth-web-server session-keep
```

**Validation Commands**

show auth

show auth-web-server

show running-config

# auth-web-server ssl

**Overview**

This command enables HTTPS functionality for the Web-Authentication server feature.

Use the **no** variant of this command to disable HTTPS functionality for the Web-Authentication server.

**Syntax**

```
auth-web-server ssl
no auth-web-server ssl
```

**Default**

HTTPS functionality for the Web-Authentication server feature is disabled by default.

**Mode**

Global Configuration

**Examples**

To enable HTTPS functionality for the Web-Authentication server feature, use the following commands:

```
awplus# configure terminal
awplus(config)# auth-web-server ssl
```

To disable HTTPS functionality for the Web-Authentication server feature, use the following commands:

```
awplus# configure terminal
awplus(config)# no auth-web-server ssl
```

**Validation Commands**

show auth

show auth-web-server

show running-config

# auth-web-server ssl intercept-port

**Overview**

Use this command to register HTTPS intercept port numbers when the HTTPS server uses custom port number (not TCP port number 443).

Note that you need to use the **auth-web-server intercept-port** command to register HTTP intercept port numbers.

Use the **no** variant of this command to delete registered port number.

**Syntax**

```
auth-web-server ssl intercept-port <1-65535>
no auth-web-server ssl intercept-port <1-65535>
```

| Parameter | Description |
|---|---|
| *<1-65535>* | TCP port number in the range from 1 through 65535 |

**Default**

443/TCP is registered by default.

**Mode**

Global Configuration

**Examples**

To register HTTPS port number 3128, use the commands:

```
awplus# configure terminal
awplus(config)# auth-web-server ssl intercept-port 3128
```

To delete HTTPS port number 3128, use the commands:

```
awplus# configure terminal
awplus(config)# no auth-web-server ssl intercept-port 3128
```

**Validation Commands**

show auth-web-server

**Related commands**

auth-web-server intercept-port

# copy proxy-autoconfig-file

**Overview** Use this command to download the proxy auto configuration (PAC) file to your switch. The Web-Authentication supplicant can get the downloaded file from the system web server.

**Syntax**

```
copy <filename> proxy-autoconfig-file
```

| Parameter | Description |
|---|---|
| *<filename>* | The URL of the PAC file. |

**Mode** Privileged Exec

**Example** To download the PAC file to this device, use the command:

```
awplus# copy tftp://server/proxy.pac proxy-autoconfig-file
```

**Related commands**

show proxy-autoconfig-file

erase proxy-autoconfig-file

# copy web-auth-https-file

**Overview** Use this command to download the SSL server certificate for web-based authentication. The file must be in PEM (Privacy Enhanced Mail) format, and contain the private key and the server certificate.

**Syntax**

```
copy <filename> web-auth-https-file
```

| Parameter | Description |
|---|---|
| *<filename>* | The URL of the server certificate file. |

**Mode** Privileged Exec

**Example** To download the server certificate file `veriSign_cert.pem` from the TFTP server directory `server`, use the command:

```
awplus# copy tftp://server/veriSign_cert.pem
web-auth-https-file
```

**Related commands**

auth-web-server ssl

erase web-auth-https-file

show auth-web-server

# description (auth-profile)

**Overview** Use this command to add a description to an authentication profile in Authentication Profile mode.

Use the **no** variant of this command to remove the current description.

**Syntax** `description <description>`

| Parameter | Description |
|---|---|
| *<description>* | Text describing the selected authentication profile. |

**Default** No description configured by default.

**Mode** Authentication Profile

**Example** To add a description to the authentication profile 'student', use the following commands:

```
awplus# configure terminal
awplus(config)# auth profile student
awplus(config-auth-profile)# description student room setting
```

To remove a description from the authentication profile 'student', use the following commands:

```
awplus# configure terminal
awplus(config)# auth profile student
awplus(config-auth-profile)# no description
```

**Related commands** auth profile (global)

# erase proxy-autoconfig-file

**Overview** Use this command to remove the proxy auto configuration file.

**Syntax**

```
erase proxy-autoconfig-file
```

**Mode** Privileged Exec

**Example** To remove the proxy auto configuration file, use the command:

```
awplus# erase proxy-autoconfig-file
```

**Related commands**

show proxy-autoconfig-file

copy proxy-autoconfig-file

# erase web-auth-https-file

**Overview** Use this command to remove the SSL server certificate for web-based authentication.

**Syntax**

```
erase web-auth-https-file
```

**Mode** Privileged Exec

**Example** To remove the SSL server certificate file for web-based authentication use the command:

```
awplus# erase web-auth-https-file
```

**Related commands**

auth-web-server ssl

copy web-auth-https-file

show auth-web-server

# show auth

**Overview** This command shows the configuration state of authentication.

**Syntax** `show auth [all]`

| Parameter | Description |
|---|---|
| `all` | Display all authentication information for each authenticated interface. This can be a static channel (or static aggregator), or a dynamic (or LACP) channel group, or a switch port. |

**Mode** Privileged Exec

**Example** To display all authentication information, enter the command:

```
awplus# show auth all
```

**Output** Figure 43-1: Example output from the **show auth** command

```
awplus# show auth all
802.1X Port-Based Authentication Enabled
MAC-based Port Authentication Disabled
WEB-based Port Authentication Enabled
 RADIUS server address (auth): 150.87.17.192:1812
   Last radius message id: 4
Authentication Info for interface eth1
 portEnabled: true - portControl: Auto
 portStatus: Authorized
 reAuthenticate: disabled
 reAuthPeriod: 3600
 PAE: quietPeriod: 60 - maxReauthReq: 2 - txPeriod: 30
 BE: suppTimeout: 30 - serverTimeout: 30
 CD: adminControlledDirections: in
 KT: keyTxEnabled: false
 critical: disabled
 guestVlan: disabled
 authFailVlan: disabled
 dynamicVlanCreation: disabled
 multiVlanCreation: disabled
 hostMode: single-host
 dot1x: enabled
   protocolVersion: 1
 authMac: disabled
 authWeb: enabled
   method: PAP
   maxAuthFail: 3
   packetForwarding:
     10.0.0.1 80/tcp
     dns
     dhcp
```

# show auth diagnostics

**Overview** This command shows authentication diagnostics, optionally for the specified interface, which may be an Ethernet port.

If no interface is specified then authentication diagnostics are shown for all interfaces.

**Syntax** `show auth diagnostics [interface <interface-list>]`

| Parameter | Description |
|---|---|
| `interface` | Specify ports to show. |
| `<interface-list>` | The interfaces or ports to configure. An interface-list can be:<br>• an interface (e.g. `eth1`)<br>• a continuous range of interfaces, e.g. `eth1-2`<br>• a comma-separated list of the above; e.g. `eth1, eth2`.<br>The specified interfaces must exist. |

**Mode** Privileged Exec

**Example** To display authentication diagnostics for eth1, enter the command:

```
awplus# show auth diagnostics interface eth1
```

**Output** Figure 43-2: Example output from the **show auth diagnostics** command

```
Authentication Diagnostics for interface eth1
     Supplicant address: 00d0.59ab.7037
         authEnterConnecting: 2
         authEaplogoffWhileConnecting: 1
         authEnterAuthenticating: 2
         authSuccessWhileAuthenticating: 1
         authTimeoutWhileAuthenticating: 1
         authFailWhileAuthenticating: 0
         authEapstartWhileAuthenticating: 0
         authEaplogoggWhileAuthenticating: 0
         authReauthsWhileAuthenticated: 0
         authEapstartWhileAuthenticated: 0
      authEaplogoffWhileAuthenticated: 0
         BackendResponses: 2
         BackendAccessChallenges: 1
         BackendOtherrequestToSupplicant: 3
         BackendAuthSuccess: 1
```

# show auth interface

**Overview** This command shows the status of port authentication on the specified interface.

**Syntax** `show auth interface <interface-list>`

| Parameter | Description |
|---|---|
| *<interface-list>* | The interfaces to display information about. An interface-list can be:<br>• a VLAN (e.g. vlan2)<br>• a switchport (e.g. port1.0.4)<br>• a static channel group (e.g. sa2)<br>• a dynamic (LACP) channel group (e.g. po2)<br>• a continuous range of interfaces separated by a hyphen (e.g. port1.0.1-port1.0.3)<br>• a comma-separated list (e.g. port1.0.1, port1.0.3-port1.0.4). Do not mix interface types in a list. |

**Mode** Privileged Exec

**Example** To display the port-based authentication status for eth1, enter the command:

```
awplus# show auth interface eth1
```

If port-based authentication is not configured, the output will be:

```
% Port-Control not configured on eth1
```

To display the port-based authentication status for eth1, enter the command:

```
awplus# show auth interface eth1
```

```
awplus# show auth interface eth1
Authentication Info for interface eth1
 portEnabled: true - portControl: Auto
 portStatus: Authorized
 reAuthenticate: disabled
 reAuthPeriod: 3600
 PAE: quietPeriod: 60 - maxReauthReq: 2 - txPeriod: 30
 BE: suppTimeout: 30 - serverTimeout: 30
 CD: adminControlledDirections: in
 KT: keyTxEnabled: false
 critical: disabled
 guestVlan: disabled
 authFailVlan: disabled
 dynamicVlanCreation: disabled
 hostMode: single-host
 dot1x: enabled
   protocolVersion: 1
 authMac: disabled
 authWeb: enabled
   method: PAP
   maxAuthFail: 3
   packetForwarding:
     10.0.0.1 80/tcp
     dns
     dhcp
 twoStepAuthentication:
   configured: enabled
   actual: enabled
   order: dot1x auth-web
 supplicantMac: none
```

**Related commands**

show auth diagnostics

show dot1x sessionstatistics

show dot1x statistics interface

show dot1x supplicant interface

# show auth sessionstatistics

**Overview** This command shows authentication session statistics for the specified interface.

**Syntax** `show auth sessionstatistics [interface <interface-list>]`

| Parameter | Description |
|---|---|
| `interface` | Specify ports to show. |
| `<interface-list>` | The interfaces or ports to configure. An interface-list can be:<br>• an interface (e.g. `eth1`)<br>• a continuous range of interfaces, e.g. `eth1-2`<br>• a comma-separated list of the above; e.g. `eth1,eth2`<br>The specified interfaces must exist. |

**Mode** Privileged Exec

**Example** To display authentication statistics for eth1, enter the command:

```
awplus# show auth sessionstatistics interface eth1
```

**Output** Figure 43-3: Example output from the **show auth sessionstatistics** command

```
Authentication session statistics for interface eth1     session
user name: manager
         session authentication method: Remote server
         session time: 19440 secs
         session terminat cause: Not terminated yet
```

# show auth statistics interface

**Overview** Use this command to show the authentication statistics for the specified interface.

**Syntax**

```
show auth statistics interface <interface-list>
```

| Parameter | Description |
|---|---|
| *<interface-list>* | The interfaces to display information about. An interface-list can be:<br>• a VLAN (e.g. vlan2)<br>• a switchport (e.g. port1.0.4)<br>• a static channel group (e.g. sa2)<br>• a dynamic (LACP) channel group (e.g. po2)<br>• a continuous range of interfaces separated by a hyphen (e.g. port1.0.1-port1.0.3)<br>• a comma-separated list (e.g. port1.0.1, port1.0.3-port1.0.4). Do not mix interface types in a list. |

**Mode** Privileged Exec

**Example** To display authentication statistics for port1.0.2, enter the command:

```
awplus# show auth statistics interface port1.0.2
```

**Output** Figure 43-4: Example output from **show auth statistics interface** for a port

```
awplus# show auth statistics interface port1.0.2
802.1X statistics for interface port1.0.2
   EAPOL Frames Rx: 5 - EAPOL Frames Tx: 16
   EAPOL Start Frames Rx: 0 - EAPOL Logoff Frames Rx: 0
   EAP Rsp/Id Frames Rx: 3 - EAP Response Frames Rx: 2
   EAP Req/Id Frames Tx: 8 - EAP Request Frames Tx: 2
   Invalid EAPOL Frames Rx: 0 - EAP Length Error Frames Rx: 0
   EAPOL Last Frame Version Rx: 1 - EAPOL Last Frame
Src:00d0.59ab.7037
```

**Related commands** show dot1x interface

# show auth supplicant

**Overview** Use this command to show the supplicant (client device) state when authentication is configured for the switch. Use the optional **brief** parameter to show a summary of the supplicant state.

**Syntax** `show auth supplicant [<macadd>] [brief]`

| Parameter | Description |
|---|---|
| *<macadd>* | Mac (hardware) address of the supplicant.<br>Entry format is HHHH.HHHH.HHHH (hexadecimal). |
| `brief` | Brief summary of the supplicant state. |

**Mode** Privileged Exec

**Examples** To display a summary of authenticated supplicant information on the device, enter the command:

```
awplus# show auth supplicant brief
```

To display authenticated supplicant information on the device, enter the command:

```
awplus# show auth supplicant
```

To display authenticated supplicant information for the device with MAC address 0000.5E00.5301, enter the command:

```
awplus# show auth supplicant 0000.5E00.5301
```

**Output** Figure 43-5: Example output from **show auth supplicant brief**

```
awplus#show auth supplicant brief
Interface port1.0.3
  authenticationMethod: dot1x/mac/web
  Two-Step Authentication
    firstMethod: mac
    secondMethod: dot1x/web
  totalSupplicantNum: 1
  authorizedSupplicantNum: 1
    macBasedAuthenticationSupplicantNum: 0
    dot1xAuthenticationSupplicantNum: 0
    webBasedAuthenticationSupplicantNum: 1
    otherAuthenticationSupplicantNum: 0

Interface   VID  Mode MAC Address    Status            IP Address      Username
=========== ==== ==== ============== ================= =============== ========
port1.0.3   1    W    001c.233e.e15a Authenticated     192.168.1.181   test
port1.0.3   1    D    0240.4040.4040 Authenticated     --              test
port1.0.3   1    Q    0230.3030.3030 Authenticated     192.168.1.181   test
```

Figure 43-6: Example output from **show auth supplicant**

```
awplus#show auth supplicant
Interface port1.0.3
  authenticationMethod: dot1x/mac/web
  Two-Step Authentication
    firstMethod: mac
    secondMethod: dot1x/web
  totalSupplicantNum: 1
  authorizedSupplicantNum: 1
    macBasedAuthenticationSupplicantNum: 0
    dot1xAuthenticationSupplicantNum: 0
    webBasedAuthenticationSupplicantNum: 1
    otherAuthenticationSupplicantNum: 0

  Supplicant name: test
  Supplicant address: 0000.5E00.5301
    authenticationMethod: WEB-based Authentication
    Two-Step Authentication:
      firstAuthentication: Pass - Method: mac
      secondAuthentication: Pass - Method: web
    portStatus: Authorized - currentId: 1
    abort:F fail:F start:F timeout:F success:T
    PAE: state: Authenticated - portMode: Auto
    PAE: reAuthCount: 0 - rxRespId: 0
    PAE: quietPeriod: 60 - maxReauthReq: 2
    BE: state: Idle - reqCount: 0 - idFromServer: 0
    CD: adminControlledDirections: in - operControlledDirections: in
    CD: bridgeDetected: false
    KR: rxKey: false
    KT: keyAvailable: false - keyTxEnabled: false
    dynamicVlanId: 999
    dynamicTaggedVlanId: 0
    RADIUS server group (auth): radius
    RADIUS server (auth): 192.168.1.40
    Session timeout enabled: No
    dynamicACL Rules:
      ip:deny ip 10.37.165.10/24 any
      ip:permit ip any any
      ipv6:deny ipv6 any any
    Quarantined: true
    Quarantine Vlan: 999
```

Figure 43-7: Example output from **show auth supplicant 0000.5E00.5301**

```
awplus#show auth supplicant 0000.5E00.5301
Interface port1.0.3
  Supplicant name: test
  Supplicant address: 0000.5E00.5301
    authenticationMethod: WEB-based Authentication
    Two-Step Authentication:
      firstAuthentication: Pass - Method: mac
      secondAuthentication: Pass - Method: web
    portStatus: Authorized - currentId: 1
    abort:F fail:F start:F timeout:F success:T
    PAE: state: Authenticated - portMode: Auto
    PAE: reAuthCount: 0 - rxRespId: 0
    PAE: quietPeriod: 60 - maxReauthReq: 2
    BE: state: Idle - reqCount: 0 - idFromServer: 0
    CD: adminControlledDirections: in - operControlledDirections: in
    CD: bridgeDetected: false
    Quarantined: true
    Quarantine Vlan: 999
    KR: rxKey: false
    KT: keyAvailable: false - keyTxEnabled: false
    RADIUS server group (auth): radius
    RADIUS server (auth): 192.168.1.40
    Session timeout enabled: No
    dynamicACL Rules:
      ip:deny ip 10.37.165.10/24 any
      ip:permit ip any any
      ipv6:deny ipv6 any any
```

**Related commands**

aaa accounting auth-mac

aaa accounting auth-web

aaa accounting dot1x

aaa authentication auth-mac

aaa authentication auth-web

aaa authentication dot1x

# show auth supplicant interface

**Overview** This command shows the supplicant (client device) state for the authentication mode set for the interface. Use the optional **brief** parameter to show a summary of the supplicant state.

**Syntax** `show auth-web supplicant interface <interface-list> [brief]`

| Parameter | Description |
|---|---|
| `<interface-list>` | The interfaces or ports to configure. An interface-list can be:<br>• an interface (e.g. `eth1`)<br>• a continuous range of interfaces, e.g. `eth1-2`<br>• a comma-separated list of the above; e.g. `eth1,eth2`<br>The specified interfaces must exist. |
| `brief` | Brief summary of the supplicant state. |

**Mode** Privileged Exec

**Examples** To display the authenticated supplicant on the interface eth1, enter the command:

```
awplus# show auth supplicant interface eth1
```

To display brief summary output for the authenticated supplicant on the interface eth1, enter the command:

```
awplus# show auth supplicant interface eth1 brief
```

# show auth two-step supplicant brief

**Overview** This command displays the supplicant state of the two-step authentication feature on the interface.

**Syntax**

```
show auth two-step supplicant [interface <interface-list>]
brief
```

| Parameter | Description |
|---|---|
| `interface` | The interface selected for display. |
| `<interface-list>` | The interfaces to display information about. An interface-list can be:<br>• a VLAN (e.g. vlan2)<br>• a switchport (e.g. port1.0.4)<br>• a static channel group (e.g. sa2)<br>• a dynamic (LACP) channel group (e.g. po2)<br>• a continuous range of interfaces separated by a hyphen (e.g. port1.0.1-port1.0.3)<br>• a comma-separated list (e.g. port1.0.1, port1.0.3-port1.0.4). Do not mix interface types in a list. |

**Mode** Privileged Exec

**Usage notes** Do not mix interface types in a list. The specified interfaces must exist.

**Example** To display the supplicant state of the two-step authentication feature, enter the command:

```
awplus# show two-step supplicant interface port1.0.2 brief
```

**Output** Figure 43-8: Example output from **show auth two-step supplicant brief**

```
interface port1.0.2

  authenticationMethod: dot1x/mac

  Two-Step Authentication:
    firstMethod:mac
    secondMethod:dot1x
  totalSupplicantNum: 1
  authorizedSupplicantNum: 1
    macBasedAuthenticationSupplicantNum: 0
    dot1xAuthenticationSupplicantNum: 1
    webBasedAuthenticationSupplicantNum: 0
    otherAuthenticationSupplicantNum: 0

Interface  VID Mode  MAC Address       Status          FirstStep     SecondStep
========== === ====  ===========       ======          =========     ==========
port1.0.8  1   D     000b..db67.00f7   Authenticated   Pass          Pass
```

**Related commands** auth two-step enable

**Command changes** Version 5.4.9-2.1: command added to AR2050V, AR3050S, and AR4050S

# show auth-web-server

**Overview** This command shows the Web-Authentication server configuration and status on the switch.

**Syntax**

```
show auth-web-server
```

**Mode** Privileged Exec

**Example** To display Web-Authentication server configuration and status, enter the command:

```
awplus# show auth-web-server
```

**Output** Figure 43-9: Example output from the **show auth-web-server** command

```
Web authentication server
     Server status: enabled
     Server mode: none
     Server address: 192.168.1.1/24
       DHCP server enabled
       DHCP lease time: 20
       DHCP WPAD Option URL: http://192.168.1.1/proxy.pac
     HTTP Port No: 80
     Security: disabled
     Certification: default
     SSL Port No: 443
     Redirect URL: --
     Redirect Delay Time: 5
     HTTP Redirect: enabled
     Session keep: disabled
     PingPolling: disabled
     PingInterval: 30
     Timeout: 1
     FailCount: 5
     ReauthTimerReFresh: disabled
```

**Related commands**

auth-web-server ipaddress

auth-web-server port

auth-web-server redirect-delay-time

auth-web-server redirect-url

auth-web-server session-keep

auth-web-server ssl

# show auth-web-server page

**Overview** This command displays the web-authentication page configuration and status.

**Syntax** `show auth-web-server page`

**Mode** Privileged Exec

**Examples** To show the web-authentication page information, use the command:

```
awplus# show auth-web-server page
```

Figure 43-10: Example output from the **show auth-web-server page** command

```
awplus#show auth-web-server page
Web authentication page
  Logo: auto
  Title: default
  Sub-Title: Web Authentication
  Welcome message: Your welcome message
  Success message: Your success message
```

**Related commands**

auth-web forward

auth-web-server page logo

auth-web-server page sub-title

auth-web-server page success-message

auth-web-server page title

auth-web-server page welcome-message

# show proxy-autoconfig-file

**Overview** This command displays the contents of the proxy auto configuration (PAC) file.

**Syntax**

```
show proxy-autoconfig-file
```

**Mode** Privileged Exec

**Example** To display the contents of the proxy auto configuration (PAC) file, enter the command:

```
awplus# show auth proxy-autoconfig-file
```

**Output** Figure 43-11: Example output from **show proxy-autoconfig-file**

```
function FindProxyForURL(url,host)
{
 if (isPlainHostName(host) ||
     isInNet(host, “192.168.1.0”,”255.255.255.0”)) {
   return “DIRECT”;
}
 else {
   return “PROXY 192.168.110.1:8080”;
 }
}
```

**Related commands** copy proxy-autoconfig-file

erase proxy-autoconfig-file

# 44 AAA Commands

## Introduction

**Overview**

AAA is the collective title for the three related functions of Authentication, Authorization and Accounting. These function can be applied in a variety of methods with a variety of servers.

The purpose of the AAA commands is to map instances of the AAA functions to sets of servers. The Authentication function can be performed in multiple contexts, such as authentication of users logging in at a console, or 802.1X-Authentication of devices connecting to Ethernet ports.

For each of these contexts, you may want to use different sets of servers for examining the proffered authentication credentials and deciding if they are valid. AAA Authentication commands enable you to specify which servers will be used for different types of authentication.

The AR3050S supports port authentication with the following limitations:

- MAC authentication is supported on the device's switch ports static channel-groups and dynamic (LACP) channel-groups.
- 802.1X authentication is supported on the device's switch ports only. It is not supported on static channel-groups and dynamic (LACP) channel-groups.
- Web authentication is supported on the device's Eth interfaces only.

This chapter provides an alphabetical reference for AAA commands for Authentication, Authorization and Accounting. For more information, see the AAA and Port_Authentication Feature Overview and Configuration Guide.

**Command List**


- "aaa accounting auth-mac" on page 2181
- "aaa accounting auth-web" on page 2183
- "aaa accounting commands" on page 2185
- "aaa accounting dot1x" on page 2187
- "aaa accounting login" on page 2189
- "aaa accounting update" on page 2192

- "aaa authentication auth-mac" on page 2194
- "aaa authentication auth-web" on page 2196
- "aaa authentication dot1x" on page 2198
- "aaa authentication enable default group tacacs+" on page 2200
- "aaa authentication enable default local" on page 2202
- "aaa authentication isakmp" on page 2203
- "aaa authentication login" on page 2204
- "aaa authentication openvpn" on page 2206
- "aaa authorization commands" on page 2207
- "aaa authorization config-commands" on page 2209
- "aaa group server" on page 2210
- "aaa local authentication attempts lockout-time" on page 2212
- "aaa local authentication attempts max-fail" on page 2213
- "aaa login fail-delay" on page 2214
- "accounting login" on page 2215
- "authorization commands" on page 2216
- "clear aaa local user lockout" on page 2218
- "debug aaa" on page 2219
- "login authentication" on page 2220
- "proxy-port" on page 2221
- "radius-secure-proxy aaa" on page 2222
- "server (radsecproxy-aaa)" on page 2223
- "server mutual-authentication" on page 2225
- "server name-check" on page 2226
- "server trustpoint" on page 2227
- "show aaa local user locked" on page 2229
- "show aaa server group" on page 2230
- "show debugging aaa" on page 2231
- "show radius server group" on page 2232
- "undebug aaa" on page 2234

# aaa accounting auth-mac

**Overview** This command configures an accounting method list for MAC-based authentication. An accounting method list specifies what type of accounting messages are sent and which RADIUS servers the accounting messages are sent to. Use this command to configure either the default method list, which is automatically applied to interfaces with MAC-based authentication enabled, or a named method list, which can be applied to an interface with the auth-mac accounting command.

Use the **no** variant of this command to disable either the default or a named accounting method list for MAC-based authentication. Once all method lists are disabled, AAA accounting for MAC-based authentication is disabled globally.

**Syntax**

```
aaa accounting auth-mac {default|<list-name>}
{start-stop|stop-only|none} group {<group-name>|radius}
```

```
no aaa accounting auth-mac {default|<list-name>}
```

| Parameter | Description |
|---|---|
| `default` | Configure the default accounting method list |
| `<list-name>` | Configure a named accounting method list |
| `start-stop` | Sends a start accounting message at the beginning of the session and a stop accounting message at the end of the session. |
| `stop-only` | Only sends a stop accounting message at the end of the session. |
| `none` | No accounting record sent. |
| `group` | Use a server group |
| `<group-name>` | Server group name. |
| `radius` | Use all RADIUS servers. |

**Default** RADIUS accounting for MAC-based Authentication is disabled by default

**Mode** Global Configuration

**Usage notes** This command can be used to configure either the default accounting method list or a named accounting method list:

- **default**: the default accounting method list which is automatically applied to all interfaces with MAC-based authentication enabled.
- *<list-name>*: a user named list which can be applied to an interface using the auth-mac accounting command.

There are two ways to define servers where RADIUS accounting messages are sent:

- **group radius**: use all RADIUS servers configured by radius-server host command

- **group** <*group-name*>: use the specified RADIUS server group configured with the aaa group server command

The accounting event to send to the RADIUS server is configured with the following options:

- **start-stop**: sends a **start** accounting message at the beginning of a session and a **stop** accounting message at the end of the session.
- **stop-only**: sends a **stop** accounting message at the end of a session.
- **none**: disables accounting.

## Examples

To enable the default RADIUS accounting for MAC-based authentication, and use all available RADIUS servers, use the commands:

```
awplus# configure terminal
awplus(config)# aaa accounting auth-mac default start-stop
group radius
```

To disable RADIUS accounting for MAC-based Authentication, use the commands:

```
awplus# configure terminal
awplus(config)# no aaa accounting auth-mac default
```

To enable a named RADIUS accounting method list 'vlan10_acct' for MAC-based authentication, with the RADIUS server group 'rad_group_vlan10, use the commands:

```
awplus# configure terminal
awplus(config)# aaa accounting auth-mac vlan10_acct start-stop
group rad_group_vlan10
```

To disable a named RADIUS accounting method list 'vlan10_acct' for MAC-based authentication, use the commands:

```
awplus# configure terminal
awplus(config)# no aaa accounting auth-mac vlan10_acct
```

## Related commands

aaa authentication auth-mac

aaa group server

auth-mac accounting

auth-mac enable

radius-server host

show aaa server group

# aaa accounting auth-web

**Overview** This command configures an accounting method list for Web-based authentication. An accounting method list specifies what type of accounting messages are sent and which RADIUS servers the accounting messages are sent to. Use this command to configure either the default method list, which is automatically applied to interfaces with Web-based authentication enabled, or a named method list, which can be applied to an interface with the auth-web accounting command.

Use the **no** variant of this command to disable either the default or a named accounting method list for Web-based authentication. Once all method lists are disabled, AAA accounting for Web-based authentication is disabled globally.

**Syntax**

```
aaa accounting auth-web {default|<list-name>}
{start-stop|stop-only|none} group {<group-name>|radius}
```

```
no aaa accounting auth-web {default|<list-name>}
```

| Parameter | Description |
|---|---|
| `default` | Configure the default accounting method list |
| `<list-name>` | Configure a named accounting method list |
| `start-stop` | Sends a start accounting message at the beginning of the session and a stop accounting message at the end of the session. |
| `stop-only` | Only sends a stop accounting message at the end of the session. |
| `none` | No accounting record sent. |
| `group` | Use a server group |
| `<group-name>` | Server group name. |
| `radius` | Use all RADIUS servers. |

**Default** RADIUS accounting for Web-based authentication is disabled by default.

**Mode** Global Configuration

**Usage notes** This command can be used to configure either the default accounting method list or a named accounting method list:

- **default**: the default accounting method list which is automatically applied to all interfaces with Web-based authentication enabled.
- *<list-name>*: a user named list which can be applied to an interface using the auth-web accounting command.

There are two ways to define servers where RADIUS accounting messages are sent:

- **group radius**: use all RADIUS servers configured by radius-server host command

- **group** <*group-name*>: use the specified RADIUS server group configured with the aaa group server command

Configure the accounting event to be sent to the RADIUS server with the following options:

- **start-stop**: sends a start accounting message at the beginning of a session and a stop accounting message at the end of the session.
- **stop-only**: sends a stop accounting message at the end of a session.
- **none**: disables accounting.

## Examples

To enable the default RADIUS accounting method for Web-based authentication, and use all available RADIUS servers, use the commands:

```
awplus# configure terminal
awplus(config)# aaa accounting auth-web default start-stop
group radius
```

To disable the default RADIUS accounting method for Web-based authentication, use the commands:

```
awplus# configure terminal
awplus(config)# no aaa accounting auth-web default
```

To enable a named RADIUS accounting method list 'example_acct' for Web-based authentication, with the RADIUS server group 'rad_group_example, use the commands:

```
awplus# configure terminal
awplus(config)# aaa accounting auth-web example_acct start-stop
group rad_group_example
```

To disable a named RADIUS accounting method list 'example_acct' for Web-based authentication, use the commands:

```
awplus# configure terminal
awplus(config)# no aaa accounting auth-web example_acct
```

## Related commands

aaa authentication auth-web

aaa group server

auth-web accounting

auth-web enable

radius-server host

show aaa server group

# aaa accounting commands

**Overview**

This command configures and enables TACACS+ accounting on commands entered at a specified privilege level. Once enabled for a privilege level, accounting messages for commands entered at that privilege level will be sent to a TACACS+ server.

In order to account for all commands entered on a device, configure command accounting for each privilege level separately.

The command accounting message includes, the command as entered, the date and time the command finished executing, and the user-name of the user who executed the command.

Use the **no** variant of this command to disable command accounting for a specified privilege level.

**Syntax**

```
aaa accounting commands <1-15> default stop-only group tacacs+
no aaa accounting commands <1-15> default
```

| Parameter | Description |
|---|---|
| *<1-15>* | The privilege level being configured, in the range 1 to 15. |
| `default` | Use the default method list, this means the command is applied globally to all user exec sessions. |
| `stop-only` | Send accounting message when the commands have stopped executing. |
| `group` | Specify the server group where accounting messages are sent. Only the tacacs+ group is available for this command. |
| `tacacs+` | Use all TACACS+ servers configured by the tacacs-server host command. |

**Default**

TACACS+ command accounting is disabled by default.

**Mode**

Global Configuration

**Usage notes**

This command only supports a **default** method list, this means that it is applied to every console and VTY line.

The **stop-only** parameter indicates that the command accounting messages are sent to the TACACS+ server when the commands have stopped executing.

The **group tacacs+** parameters signifies that the command accounting messages are sent to the TACACS+ servers configured by the tacacs-server host command.

Note that up to four TACACS+ servers can be configured for accounting. The servers are checked for reachability in the order they are configured with only the first reachable server being used. If no server is found, the accounting message is dropped.

Command accounting cannot coexist with triggers. An error message is displayed if you attempt to enable command accounting while a trigger is configured. Likewise, an error message is displayed if you attempt to configure a trigger while command accounting is configured.

**Examples**

To configure command accounting for privilege levels 1, 7, and 15, use the following commands:

```
awplus# configure terminal
awplus(config)# aaa accounting commands 1 default stop-only
group tacacs+
awplus(config)# aaa accounting commands 7 default stop-only
group tacacs+
awplus(config)# aaa accounting commands 15 default stop-only
group tacacs+
```

To disable command accounting for privilege levels 1, 7, and 15, use the following commands:

```
awplus# configure terminal
awplus(config)# no aaa accounting commands 1 default
awplus(config)# no aaa accounting commands 7 default
awplus(config)# no aaa accounting commands 15 default
```

**Related commands**

aaa authentication login

aaa accounting login

accounting login

tacacs-server host

# aaa accounting dot1x

**Overview** Use this command to configure an accounting method list for IEEE 802.1X-based authentication. An accounting method list specifies what type of accounting messages are sent and which RADIUS servers the accounting messages are sent to. Use this command to configure either the default method list, which is automatically applied to interfaces with IEEE 802.1X-based authentication enabled, or a named method list, which can be applied to an interface with the dot1x accounting command.

Use the **no** variant of this command to disable either the default or a named accounting method list for 802.1X-based authentication. Once all method lists are disabled, AAA accounting for 802.1x-based authentication is disabled globally.

**Syntax**

```
aaa accounting dot1x {default|<list-name>}
{start-stop|stop-only|none} group {<group-name>|radius}
no aaa accounting dot1x {default|<list-name>}
```

| Parameter | Description |
|---|---|
| `default` | Configure the default accounting method list |
| `<list-name>` | Configure a named accounting method list |
| `start-stop` | Sends a start accounting message at the beginning of the session and a stop accounting message at the end of the session. |
| `stop-only` | Only sends a stop accounting message at the end of the session. |
| `none` | No accounting record sent. |
| `group` | Use a server group |
| `<group-name>` | Server group name. |
| `radius` | Use all RADIUS servers. |

**Default** RADIUS accounting for 802.1X-based authentication is disabled by default (there is no default server set by default).

**Mode** Global Configuration

**Usage notes** This command can be used to configure either the default accounting method list or a named accounting method list:

- **default**: the default accounting method list which is automatically applied to all interfaces with 802.1X-based authentication enabled.
- *<list-name>*: a user named list which can be applied to an interface using the dot1x accounting command.

There are two ways to define servers where RADIUS accounting messages will be sent:

- **group radius**: use all RADIUS servers configured by radius-server host command.
- **group** <*group-name*>: use the specified RADIUS server group configured with the aaa group server command.

The accounting event to send to the RADIUS server is configured by the following options:

- **start-stop**: sends a **start** accounting message at the beginning of a session and a **stop** accounting message at the end of the session.
- **stop-only**: sends a **stop** accounting message at the end of a session.
- **none**: disables accounting.

**Examples**

To enable RADIUS accounting for 802.1X-based authentication, and use all available RADIUS Servers, use the commands:

```
awplus# configure terminal
awplus(config)# aaa accounting dot1x default start-stop group
radius
```

To disable RADIUS accounting for 802.1X-based authentication, use the commands:

```
awplus# configure terminal
awplus(config)# no aaa accounting dot1x default
```

To enable a named RADIUS accounting method list 'vlan10_acct' for 802.1X-based authentication, with the RADIUS server group 'rad_group_vlan10, use the commands:

```
awplus# configure terminal
awplus(config)# aaa accounting dot1x vlan10_acct start-stop
group rad_group_vlan10
```

To disable a named RADIUS accounting method list 'vlan10_acct' for 802.1X-based authentication, use the commands:

```
awplus# configure terminal
awplus(config)# no aaa accounting dot1x vlan10_acct
```

**Related commands**

aaa accounting update

aaa authentication dot1x

aaa group server

dot1x accounting

dot1x port-control

radius-server host

show aaa server group

**Command changes**

Version 5.4.9-2.1: command added to AR2050V, AR3050S, and AR4050S

# aaa accounting login

**Overview** This command configures RADIUS and TACACS+ accounting for login shell sessions. The specified method list name can be used by the **accounting login** command in the Line Configuration mode. If the **default** parameter is specified, then this creates a default method list that is applied to every console and VTY line, unless another accounting method list is applied on that line.

Note that unlimited RADIUS servers and up to four TACACS+ servers can be configured and consulted for accounting. The first server configured is regarded as the primary server and if the primary server fails then the backup servers are consulted in turn. A backup server is consulted if the primary server fails, i.e. is unreachable.

Use the **no** variant of this command to remove an accounting method list for login shell sessions configured by an **aaa accounting login** command. If the method list being deleted is already applied to a console or VTY line, accounting on that line will be disabled. If the default method list name is removed by this command, it will disable accounting on every line that has the default accounting configuration.

**Syntax**

```
aaa accounting login
{default|<list-name>}{start-stop|stop-only|none} {group
{radius|tacacs+|<group-name>}}
```

```
no aaa accounting login {default|<list-name>}
```

| Parameter | Description |
|---|---|
| `default` | Default accounting method list. |
| `<list-name>` | Named accounting method list. |
| `start-stop` | Start and stop records to be sent. |
| `stop-only` | Stop records to be sent. |
| `none` | No accounting record to be sent. |
| `group` | Specify the servers or server group where accounting packets are sent. |
| `radius` | Use all RADIUS servers configured by the radius-server host command. |
| `tacacs+` | Use all TACACS+ servers configured by the tacacs-server host command. |
| `<group-name>` | Use the specified RADIUS server group, as configured by the aaa group server command. |

**Default** Accounting for login shell sessions is disabled by default.

**Mode** Global Configuration

## Usage notes

This command enables you to define a named accounting method list. The items that you define in the accounting options are:

- the types of accounting packets that will be sent
- the set of servers to which the accounting packets will be sent

You can define a default method list with the name **default** and any number of other named method lists. The name of any method list that you define can then be used as the <*list-name*> parameter in the accounting login command.

If the method list name already exists, the command will replace the existing configuration with the new one.

There are two ways to define servers where RADIUS accounting messages are sent:

- **group radius** : use all RADIUS servers configured by radius-server host command
- **group** <*group-name*> : use the specified RADIUS server group configured with the aaa group server command

There is one way to define servers where TACACS+ accounting messages are sent:

- **group tacacs+** : use all TACACS+ servers configured by tacacs-server host command

The accounting event to send to the RADIUS or TACACS+ server is configured with the following options:

- **start-stop** : sends a **start** accounting message at the beginning of a session and a **stop** accounting message at the end of the session.
- **stop-only** : sends a **stop** accounting message at the end of a session.
- **none** : disables accounting.

## Examples

To configure RADIUS accounting for login shell sessions, use the following commands:

```
awplus# configure terminal
awplus(config)# aaa accounting login default start-stop group
radius
```

To configure TACACS+ accounting for login shell sessions, use the following commands:

```
awplus# configure terminal
awplus(config)# aaa accounting login default start-stop group
tacacs+
```

To reset the configuration of the default accounting list, use the following commands:

```
awplus# configure terminal
awplus(config)#  no aaa accounting login default
```

**Related commands**

aaa accounting commands

aaa authentication login

aaa accounting login

accounting login

radius-server host

tacacs-server host

# aaa accounting update

**Overview**

This command enables periodic accounting reporting to either the RADIUS or TACACS+ accounting server(s) wherever login accounting has been configured.

Note that unlimited RADIUS servers and up to four TACACS+ servers can be configured and consulted for accounting. The first server configured is regarded as the primary server and if the primary server fails then the backup servers are consulted in turn. A backup server is consulted if the primary server fails, i.e. is unreachable.

Use the **no** variant of this command to disable periodic accounting reporting to the accounting server(s).

**Syntax**

```
aaa accounting update [periodic <1-65535>]
no aaa accounting update
```

| Parameter | Description |
|---|---|
| `periodic` | Send accounting records periodically. |
| *<1-65535>* | The interval to send accounting updates (in minutes). The default is 30 minutes. |

**Default**

Periodic accounting update is disabled by default.

**Mode**

Global Configuration

**Usage notes**

Use this command to enable the device to send periodic AAA login accounting reports to the accounting server. When periodic accounting report is enabled, interim accounting records are sent according to the interval specified by the **periodic** parameter. The accounting updates are start messages.

If the **no** variant of this command is used to disable periodic accounting reporting, any interval specified by the **periodic** parameter is reset to the default of 30 minutes when accounting reporting is reenabled, unless this interval is specified.

**Examples**

To configure the switch to send period accounting updates every 30 minutes, the default period, use the following commands:

```
awplus# configure terminal
awplus(config)# aaa accounting update
```

To configure the switch to send period accounting updates every 10 minutes, use the following commands:

```
awplus# configure terminal
awplus(config)# aaa accounting update periodic 10
```

To disable periodic accounting update wherever accounting has been configured, use the following commands:

```
awplus# configure terminal
awplus(config)# no aaa accounting update
```

**Related commands**

aaa accounting auth-mac

aaa accounting auth-web

aaa accounting dot1x

aaa accounting login

# aaa authentication auth-mac

**Overview** This command enables MAC-based authentication globally and allows you to enable either the default authentication method list (in this case, a list of RADIUS servers), which is automatically applied to every interface running MAC-based authentication, or a user named authentication method list, which is applied to an interface with the auth-mac authentication command.

Use the **no** variant of this command to disable either the default or a named method list for MAC-based authentication. Once all method lists are disabled MAC-based authentication is disabled globally.

**Syntax**

```
aaa authentication auth-mac {default|<list-name>} group
{<group-name>|radius}
```

```
no aaa authentication auth-mac {default|<list-name>}
```

| Parameter | Description |
|---|---|
| `default` | Configure the default authentication method list |
| `<list-name>` | Configure a named authentication method list |
| `group` | Use a server group |
| `<group-name>` | Server group name. |
| `radius` | Use all RADIUS servers. |

**Default** MAC-based Port Authentication is disabled by default.

**Mode** Global Configuration

**Usage notes** This command can be used to configure either the default authentication method list or a named authentication method list:

- **default**: the default authentication method list which is automatically applied to all interfaces with Web-based authentication enabled.
- *<list-name>*: a user named list which can be applied to an interface using the auth-web authentication command.

There are two ways to define servers where RADIUS accounting messages are sent:

- **group radius**: use all RADIUS servers configured by radius-server host command
- **group** *<group-name>*: use the specified RADIUS server group configured with the aaa group server command

All configured RADIUS Servers are automatically members of the server group **radius**. If a server is added to a named group *<group-name>*, it also remains a member of the group **radius**.

**Examples**

To enable MAC-based authentication globally for all RADIUS servers, and use all available RADIUS servers, use the commands:

```
awplus# configure terminal
awplus(config)# aaa authentication auth-mac default group radius
```

To disable MAC-based authentication, use the commands:

```
awplus# configure terminal
awplus(config)# no aaa authentication auth-mac default
```

To enable MAC-based authentication for named list 'vlan10_auth', with RADIUS server group 'rad_group_vlan10, use the commands:

```
awplus# configure terminal
awplus(config)# aaa authentication auth-mac vlan10_auth group rad_group_vlan10
```

To disable MAC-based authentication for named list 'vlan10_auth', use the commands:

```
awplus# configure terminal
awplus(config)# no aaa authentication auth-mac vlan10_acct
```

**Related commands**

aaa accounting auth-mac

aaa group server

auth-mac authentication

auth-mac enable

radius-server host

show aaa server group

# aaa authentication auth-web

**Overview** This command enables Web-based authentication globally and allows you to enable either the default authentication method list (in this case, a list of RADIUS servers), which is automatically applied to every interface running Web-based authentication, or a user named authentication method list, which is applied to an interface with the auth-web authentication command.

Use the **no** variant of this command to disable either the default or a named method list for Web-based authentication. Once all method lists are disabled Web-based authentication is disabled globally.

**Syntax**

```
aaa authentication auth-web {default|<list-name>} group
{<group-name>|radius}
```

```
no aaa authentication auth-web {default|<list-name>}
```

| Parameter | Description |
|---|---|
| `default` | Configure the default authentication method list |
| `<list-name>` | Configure a named authentication method list |
| `group` | Use a server group |
| `<group-name>` | Server group name. |
| `radius` | Use all RADIUS servers. |

**Default** Web-based authentication is disabled by default.

**Mode** Global Configuration

**Usage notes** This command can be used to configure either the default authentication method list or a named authentication method list:

- **default**: the default authentication method list which is automatically applied to all interfaces with Web-based authentication enabled.
- *<list-name>*: a user named list which can be applied to an interface using the auth-web authentication command.

There are two ways to define servers where RADIUS accounting messages are sent:

- **group radius**: use all RADIUS servers configured by radius-server host command
- **group** *<group-name>*: use the specified RADIUS server group configured with the aaa group server command

Note that you need to configure an IPv4 address for the VLAN interface on which Web authentication is running.

**Examples**

To enable Web-based authentication globally for all RADIUS servers, and use all available RADIUS servers, use the commands:

```
awplus# configure terminal
awplus(config)# aaa authentication auth-web default group radius
```

To disable Web-based authentication, use the commands:

```
awplus# configure terminal
awplus(config)# no aaa authentication auth-web default
```

To enable Web-based authentication for named list 'example_auth', with RADIUS server group 'rad_group_example, use the commands:

```
awplus# configure terminal
awplus(config)# aaa authentication auth-web example_auth group rad_group_example
```

To disable Web-based authentication for named list 'example_auth', use the commands:

```
awplus# configure terminal
awplus(config)# no aaa authentication example_auth
```

**Related commands**

aaa accounting auth-web

aaa group server

auth-web authentication

radius-server host

# aaa authentication dot1x

**Overview** Use this command to enable IEEE 802.1X-based authentication globally and to allow you to enable either the default authentication method list (in this case, a list of RADIUS servers), which is automatically applied to every interface running IEEE 802.1X-based authentication, or a user named authentication method list, which is applied to an interface with the dot1x authentication command.

Use the **no** variant of this command to disable either the default or a named method list for 802.1X-based authentication. Once all method lists are disabled 802.1x-based authentication is disabled globally.

**Syntax**

```
aaa authentication dot1x {default|<list-name>} group
{<group-name>|radius}
```

```
no aaa authentication dot1x {default|<list-name>}
```

| Parameter | Description |
|---|---|
| `default` | Configure the default authentication method list |
| `<list-name>` | Configure a named authentication method list |
| `group` | Use a server group |
| `<group-name>` | Server group name. |
| `radius` | Use all RADIUS servers. |

**Default** 802.1X-based Port Authentication is disabled by default.

**Mode** Global Configuration

**Usage notes** This command can be used to configure either the default authentication method list or a named authentication method list:

- **default**: the default authentication method list which is automatically applied to all interfaces with 802.1X-based authentication enabled.
- *<list-name>*: a user named list which can be applied to an interface using the aaa authentication dot1x command.

There are two ways to define servers where RADIUS accounting messages are sent:

- **group radius**: use all RADIUS servers configured by radius-server host command
- **group** *<group-name>*: use the specified RADIUS server group configured with the aaa group server command

**Examples** To enable 802.1X-based authentication globally with all RADIUS servers, and use all available RADIUS servers, use the command:

```
awplus# configure terminal
awplus(config)# aaa authentication dot1x default group radius
```

To disable 802.1X-based authentication, use the command:

```
awplus# configure terminal
awplus(config)# no aaa authentication dot1x default
```

To enable 802.1X-based authentication for named list 'vlan10_auth', with RADIUS server group 'rad_group_vlan10', use the commands:

```
awplus# configure terminal
awplus(config)# aaa authentication dot1x vlan10_auth group
rad_group_vlan10
```

To disable 802.1X-based authentication for named list 'vlan10_auth' use the commands:

```
awplus# configure terminal
awplus(config)# no aaa authentication dot1x vlan10_acct
```

**Related commands**

aaa accounting dot1x

aaa group server

dot1x authentication

dot1x port-control

radius-server host

show aaa server group

**Command changes**

Version 5.4.9-2.1: command added to AR2050V, AR3050S, and AR4050S

# aaa authentication enable default group tacacs+

**Overview** This command enables privilege level authentication against a TACACS+ server.

Use the **no** variant of this command to disable privilege level authentication.

**Syntax**

```
aaa authentication enable default group tacacs+ [local] [none]
no aaa authentication enable default
```

| Parameter | Description |
|---|---|
| `local` | Use the locally configured enable password (**enable password** command) for authentication. |
| `none` | No authentication. |

**Default** Local privilege level authentication is enabled by default (aaa authentication enable default local command).

**Mode** Global Configuration

**Usage notes** A user is configured on a TACACS+ server with a maximum privilege level. When they enter the enable (Privileged Exec mode) command they are prompted for an enable password which is authenticated against the TACACS+ server. If the password is correct and the specified privilege level is equal to or less than the users maximum privilege level, then they are granted access to that level. If the user attempts to access a privilege level that is higher than their maximum configured privilege level, then the authentication session will fail and they will remain at their current privilege level.

***NOTE:*** *If both **local** and **none** are specified, you must always specify **local** first.*

If the TACACS+ server goes offline, or is not reachable during enable password authentication, and command level authentication is configured as:

- **aaa authentication enable default group tacacs+**

  then the user is never granted access to Privileged Exec mode.

- **aaa authentication enable default group tacacs+ local**

  then the user is authenticated using the locally configured enable password, which if entered correctly grants the user access to Privileged Exec mode. If no enable password is locally configured (**enable password** command), then the enable authentication will fail until the TACACS+ server becomes available again.

- **aaa authentication enable default group tacacs+ none**

  then the user is granted access to Privileged Exec mode with no authentication. This is true even if a locally configured enable password is configured.

- **aaa authentication enable default group tacacs+ local none**

  then the user is authenticated using the locally configured enable password. If no enable password is locally configured, then the enable authentication will grant access to Privileged Exec mode with no authentication.

If the password for the user is not successfully authenticated by the server, then the user is again prompted for an enable password when they enter **enable** via the CLI.

## Examples

To enable a privilege level authentication method that will not allow the user to access Privileged Exec mode if the TACACS+ server goes offline, or is not reachable during enable password authentication, use the following commands:

```
awplus# configure terminal
awplus(config)# aaa authentication enable default group tacacs+
```

To enable a privilege level authentication method that will allow the user to access Privileged Exec mode if the TACACS+ server goes offline, or is not reachable during enable password authentication, and a locally configured enable password is configured, use the following commands:

```
awplus# configure terminal
awplus(config)# aaa authentication enable default group tacacs+
local
```

To disable privilege level authentication, use the following commands:

```
awplus# configure terminal
awplus(config)# no aaa authentication enable default
```

## Related commands

aaa authentication login

aaa authentication enable default local

enable (Privileged Exec mode)

enable password

enable secret (deprecated)

tacacs-server host

# aaa authentication enable default local

**Overview**

This command enables local privilege level authentication.

Use the **no** variant of this command to disable local privilege level authentication.

**Syntax**

```
aaa authentication enable default local
no aaa authentication enable default
```

**Default**

Local privilege level authentication is enabled by default.

**Mode**

Global Configuration

**Usage notes**

The privilege level configured for a particular user in the local user database is the privilege threshold above which the user is prompted for an enable (Privileged Exec mode) command.

**Examples**

To enable local privilege level authentication, use the following commands:

```
awplus# configure terminal
awplus(config)# aaa authentication enable default local
```

To disable local privilege level authentication, use the following commands:

```
awplus# configure terminal
awplus(config)# no aaa authentication enable default
```

**Related commands**

aaa authentication login

enable (Privileged Exec mode)

enable password

enable secret (deprecated)

# aaa authentication isakmp

**Overview**

Use this command to enable global RADIUS authentication for ISAKMP tunnels.

Use the **no** variant of this command to disable global RADIUS authentication of ISAKMP tunnels.

**Syntax**

```
aaa authentication isakmp default group [<group-name>|radius]
no aaa authentication isakmp default
```

| Parameter | Description |
|---|---|
| *<group-name>* | Server group name |
| radius | Use all RADIUS servers |

**Default**

Disabled

**Mode**

Global Configuration

**Usage notes**

When RADIUS authentication is enabled globally to ISAKMP tunnels it is automatically applied to every ISAKMP tunnel interface.

There are two ways to define servers where radius accounting messages are sent:

- Group radius, where all RADIUS servers configured using this command are used
- Group *<group-name>*, where the specified RADIUS server group configured is used

**Examples**

To enable RADIUS authentication for ISAKMP tunnels globally and use all available radius servers, use the commands:

```
awplus# configure terminal
awplus(config)# aaa authentication isakmp default group radius
```

To disable RADIUS authentication for ISAKMP tunnels, use the commands:

```
awplus# configure terminal
awplus(config)# no authentication isakmp default
```

**Related commands**

radius-server host

aaa group server

**Command changes**

Version 5.4.9-0.1: command added

# aaa authentication login

**Overview** Use this command to create an ordered list of methods to use to authenticate user login, or to replace an existing method list with the same name. Specify one or more of the options **local** or **group**, in the order you want them to be applied. If the **default** method list name is specified, it is applied to every console and VTY line immediately unless another method list is applied to that line by the login authentication command. To apply a non-default method list, you must also use the login authentication command.

Use the **no** variant of this command to remove an authentication method list for user login. The specified method list name is deleted from the configuration. If the method list name has been applied to any console or VTY line, user login authentication on that line will fail.

Note that the **no aaa authentication login default** command does not remove the default method list. This will return the default method list to its default state (**local** is the default).

**Syntax**

```
aaa authentication login {default|<list-name>} {[local] [group
{radius|tacacs+|<group-name>}]}
```

```
no aaa authentication login {default|<list-name>}
```

| Parameter | Description |
|---|---|
| `default` | Set the default authentication server for user login. |
| `<list-name>` | Name of authentication server. |
| `local` | Use the local username database. |
| `group` | Use server group. |
| `radius` | Use all RADIUS servers configured by the radius-server host command. |
| `tacacs+` | Use all TACACS+ servers configured by the tacacs-server host command. |
| `<group-name>` | Use the specified RADIUS server group, as configured by the aaa group server command. |

**Default** If the default server is not configured using this command, user login authentication uses the local user database only.

If the **default** method list name is specified, it is applied to every console and VTY line immediately unless a named method list server is applied to that line by the **loginauthentication** command.

**local** is the default state for the default method list unless a named method list is applied to that line by the **login authentication** command. Reset to the default method list using the **no aaa authentication login default** command.

**Mode** Global Configuration

## Usage notes

When a user attempts to log in, the switch sends an authentication request to the first authentication server in the method list. If the first server in the list is reachable and it contains a username and password matching the authentication request, the user is authenticated and the login succeeds. If the authentication server denies the authentication request because of an incorrect username or password, the user login fails. If the first server in the method list is unreachable, the switch sends the request to the next server in the list, and so on.

For example, if the method list specifies **group tacacs+ local**, and a user attempts to log in with a password that does not match a user entry in the first TACACS+ server, if this TACACS+ server denies the authentication request, then the switch does not try any other TACACS+ servers not the local user database; the user login fails.

## Examples

To configure the default authentication method list for user login to first use all available RADIUS servers for user login authentication, and then use the local user database, use the following commands:

```
awplus# configure terminal
awplus(config)# aaa authentication login default group radius
local
```

To configure a user login authentication method list called **USERS** to first use the RADIUS server group RAD_GROUP1 for user login authentication, and then use the local user database, use the following commands:

```
awplus# configure terminal
awplus(config)# aaa authentication login USERS group RAD_GROUP1
local
```

To configure a user login authentication method list called USERS to first use the TACACS+ servers for user login authentication, and then use the local user database, use the following commands:

```
awplus# configure terminal
awplus(config)# aaa authentication login USERS group tacacs+
local
```

To return to the default method list (**local** is the default server), use the following commands:

```
awplus# configure terminal
awplus(config)# no aaa authentication login default
```

To delete an existing authentication method list USERS created for user login authentication, use the following commands:

```
awplus# configure terminal
awplus(config)# no aaa authentication login USERS
```

## Related commands

aaa accounting commands

aaa authentication enable default group tacacs+

login authentication

# aaa authentication openvpn

**Overview** This command enables RADIUS authentication of OpenVPN tunnels globally. It is automatically applied to every OpenVPN tunnel interface.

Use the **no** variant of this command to globally disable RADIUS authentication of OpenVPN tunnels.

**Syntax**

```
aaa authentication openvpn default group {<group-name>|radius}
no aaa authentication openvpn default
```

| Parameter | Description |
|---|---|
| `radius` | Use all RADIUS servers. |
| `<group-name>` | Server group name. |

**Default** RADIUS authentication of OpenVPN tunnels is disabled by default.

**Mode** Global Configuration

**Usage notes** Use the **no** variant of this command to reset the default authentication method for OpenVPN tunnels, to its default, that is, to use the group **radius**, containing all RADIUS servers configured by the **radius-server host** command.

Note that if the default authentication method is used, all OpenVPN tunnels will use the group **radius**, containing all RADIUS servers.

There are two ways to define servers where RADIUS accounting messages are sent:

- **group radius** : use all RADIUS servers configured by radius-server host command
- **group** *<group-name>* : use the specified RADIUS server group configured with the aaa group server command

**Examples** To enable RADIUS authentication of OpenVPN tunnels globally and use all available RADIUS servers, use the commands:

```
awplus# configure terminal
awplus(config)# aaa authentication openvpn default group radius
```

To disable RADIUS authentication of OpenVPN tunnels, use the commands:

```
awplus# configure terminal
awplus(config)# no aaa authentication openvpn default
```

**Related commands** aaa group server

radius-server host

# aaa authorization commands

**Overview** This command configures a method list for commands authorization that can be applied to console or VTY lines. When command authorization is enabled for a privilege level, only authorized users can executed commands in that privilege level.

Use the **no** variant of this command to remove a named method list or disable the default method list for a privilege level.

**Syntax**

```
aaa authorization commands <privilege-level>
{default|<list-name>} group tacacs+ [none]
```

```
no aaa authorization commands <privilege-level>
{default|<list-name>}
```

| Parameter | Description |
|---|---|
| *<privilege-level>* | The privilege level of the set of commands the method list will be applied to.<br>AlliedWare Plus defines three sets of commands, that are indexed by a level value:<br>**Level = 1**: All commands that can be accessed by a user with privilege level between 1 and 6 inclusive<br>**Level = 7:** All commands that can be accessed by a user with privilege level between 7 and 14 inclusive<br>**Level = 15**: All commands that can be accessed by a user with privilege level 15 |
| `group` | Specify the server group where authorization messages are sent. Only the `tacacs+` group is available for this command. |
| `tacacs+` | Use all TACACS+ servers configured by the tacacs-server host command. |
| `default` | Configure the default authorization commands method list. |
| *<list-name>* | Configure a named authorization commands method list |
| `none` | If specified, this provides a local fallback to command authorization so that if authorization servers become unavailable then the device will accept all commands normally allowed for the privilege level of the user. |

**Mode** Global Configuration

**Usage notes** TACACS+ command authorization provides centralized control of the commands available to a user of an AlliedWare Plus device. Once enabled:

- The command string and username are encrypted and sent to the first available configured TACACS+ server (the first server configured) for authorization.

- The TACACS+ server decides if the user is authorized to execute the command and returns the decision to the AlliedWare Plus device.
- Depending on this decision the device will then either execute the command or notify the user that authorization has failed.

If multiple TACACS+ servers are configured, and the first server is unreachable or does not respond, the other servers will be queried, in turn, for an authorization decision. If all servers are unreachable and a local fallback has been configured, with the **none** parameter, then commands are authorized based on the user's privilege level; the same behavior as if command authorization had not been configured. If, however, the local fallback is not configured and all servers become unreachable then all commands except **logout**, **exit**, and **quit** will be denied.

The **default** method list is defined with a local fallback unless configured differently using this command.

**Example**

To configure a commands authorization method list, named TAC15, using all TACACS+ servers to authorize commands for privilege level 15, with a local fallback, use the following commands:

```
awplus# configure terminal
awplus(config)# aaa authorization commands 15 TAC15 group
tacacs+ none
```

To configure the default method list to authorize commands for privilege level 7, with no local fallback, use the following commands:

```
awplus# configure terminal
awplus(config)# aaa authorization commands 7 default group
tacacs+
```

To remove the authorization method list TAC15, use the following commands:

```
awplus# configure terminal
awplus(config)# no aaa authorization commands 15 TAC15
```

**Related commands**

aaa authorization config-commands

authorization commands

tacacs-server host

**Command changes**

Version 5.4.6-2.1: command added

# aaa authorization config-commands

**Overview**

Use this command to enable command authorization on configuration mode commands. By default, command authorization applies to commands in exec mode only.

Use the **no** variant of this command to disable command authorization on configuration mode commands.

**Syntax**

```
aaa authorization config-commands
no aaa authorization config-commands
```

**Default**

By default, command authorization is disabled on configuration mode commands.

**Mode**

Global Configuration

**Usage notes**

If authorization of configuration mode commands is not enabled then all configuration commands are accepted by default, including command authorization commands.

***NOTE:*** *Authorization of configuration commands is required for a secure TACACS+ command authorization configuration as it prevents the feature from being disabled to gain access to unauthorized exec mode commands.*

**Example**

To enable command authorization for configuration mode commands, use the commands:

```
awplus# configure terminal
awplus(config)# aaa authorization config-commands
```

To disable command authorization for configuration mode commands, use the commands:

```
awplus# configure terminal
awplus(config)# no aaa authorization config-commands
```

**Related commands**

aaa authorization commands

authorization commands

tacacs-server host

**Command changes**

Version 5.4.6-2.1: command added

# aaa group server

**Overview** This command configures a RADIUS server group. A server group can be used to specify a subset of RADIUS servers in **aaa** commands. The group name **radius** is predefined, which includes all RADIUS servers configured by the **radius-server host** command.

RADIUS servers are added to a server group using the **server** command. Each RADIUS server should be configured using the **radius-server host** command.

Use the **no** variant of this command to remove an existing RADIUS server group.

**Syntax**

```
aaa group server radius <group-name>
no aaa group server radius <group-name>
```

| Parameter | Description |
|---|---|
| *<group-name>* | Server group name. |

**Mode** Global Configuration

**Usage notes** Use this command to create an AAA group of RADIUS servers, and to enter Server Group Configuration mode, in which you can add servers to the group. Use a server group to specify a subset of RADIUS servers in AAA commands. Each RADIUS server must be configured by the **radius-server host** command. To add RADIUS servers to a server group, use the **server** command.

**Examples** To create a RADIUS server group named GROUP1 with hosts `192.168.1.1`, `192.168.2.1` and `192.168.3.1`, use the commands:

```
awplus(config)# aaa group server radius GROUP1
awplus(config-sg)# server 192.168.1.1 auth-port 1812 acct-port
1813
awplus(config-sg)# server 192.168.2.1 auth-port 1812 acct-port
1813
awplus(config-sg)# server 192.168.3.1 auth-port 1812 acct-port
1813
```

To remove a RADIUS server group named GROUP1 from the configuration, use the command:

```
awplus(config)# no aaa group server radius GROUP1
```

**Related commands**

aaa accounting auth-mac

aaa accounting auth-web

aaa accounting dot1x

aaa accounting login

aaa authentication auth-mac

aaa authentication auth-web

aaa authentication dot1x

aaa authentication login

radius-server host

server (server group)

show radius server group

# aaa local authentication attempts lockout-time

**Overview**

This command configures the duration of the user lockout period.

Use the **no** variant of this command to restore the duration of the user lockout period to its default of 300 seconds (5 minutes).

**Syntax**

```
aaa local authentication attempts lockout-time <lockout-time>
no aaa local authentication attempts lockout-time
```

| Parameter | Description |
|---|---|
| *<lockout-time>* | <0-10000>. Time in seconds to lockout the user. |

**Mode**

Global Configuration

**Default**

The default for the lockout-time is 300 seconds (5 minutes).

**Usage notes**

While locked out all attempts to login with the locked account will fail. The lockout can be manually cleared by another privileged account using the clear aaa local user lockout command.

**Examples**

To configure the lockout period to 10 minutes (600 seconds), use the commands:

```
awplus# configure terminal
awplus(config)# aaa local authentication attempts lockout-time
600
```

To restore the default lockout period of 5 minutes (300 seconds), use the commands:

```
awplus# configure terminal
awplus(config)# no aaa local authentication attempts
lockout-time
```

**Related commands**

aaa local authentication attempts max-fail

# aaa local authentication attempts max-fail

**Overview**

This command configures the maximum number of failed login attempts before a user account is locked out. Every time a login attempt fails the failed login counter is incremented.

Use the **no** variant of this command to restore the maximum number of failed login attempts to the default setting (five failed login attempts).

**Syntax**

```
aaa local authentication attempts max-fail <failed-logins>
no aaa local authentication attempts max-fail
```

| Parameter | Description |
|---|---|
| *<failed-logins>* | <1-32>. Number of login failures allowed before locking out a user. |

**Mode**

Global Configuration

**Default**

The default for the maximum number of failed login attempts is five failed login attempts.

**Usage**

When the failed login counter reaches the limit configured by this command that user account is locked out for a specified duration configured by the aaa local authentication attempts lockout-time command.

When a successful login occurs the failed login counter is reset to `0`. When a user account is locked out all attempts to login using that user account will fail.

**Examples**

To configure the number of login failures that will lock out a user account to two login attempts, use the commands:

```
awplus# configure terminal
awplus(config)# aaa local authentication attempts max-fail 2
```

To restore the number of login failures that will lock out a user account to the default number of login attempts (five login attempts), use the commands:

```
awplus# configure terminal
awplus(config)# no aaa local authentication attempts max-fail
```

**Related commands**

aaa local authentication attempts lockout-time

clear aaa local user lockout

# aaa login fail-delay

**Overview** Use this command to configure the minimum time period between failed login attempts. This setting applies to login attempts via the console, SSH and Telnet.

Use the **no** variant of this command to reset the minimum time period to its default value.

**Syntax**

```
aaa login fail-delay <1-10>
no aaa login fail-delay
```

| Parameter | Description |
|---|---|
| *<1-10>* | The minimum number of seconds required between login attempts |

**Default** 1 second

**Mode** Global configuration

**Example** To apply a delay of at least 5 seconds between login attempts, use the following commands:

```
awplus# configure terminal
awplus(config)# aaa login fail-delay 5
```

**Related commands**

aaa authentication login

aaa local authentication attempts lockout-time

clear aaa local user lockout

# accounting login

**Overview**

This command applies a login accounting method list to console or VTY lines for user login. When login accounting is enabled using this command, logging events generate an accounting record to the accounting server.

The accounting method list must be configured first using this command. If an accounting method list is specified that has not been created by this command then accounting will be disabled on the specified lines.

The **no** variant of this command resets AAA Accounting applied to console or VTY lines for local or remote login. **default** login accounting is applied after issuing the **no accounting login** command. Accounting is disabled with **default**.

**Syntax**

```
accounting login {default|<list-name>}
no accounting login
```

| Parameter | Description |
|---|---|
| `default` | Default accounting method list. |
| `<list-name>` | Named accounting method list. |

**Default**

By default login accounting is disabled in the **default** accounting server. No accounting will be performed until accounting is enabled using this command.

**Mode**

Line Configuration

**Examples**

To apply the accounting server USERS to all VTY lines, use the following commands:

```
awplus# configure terminal
awplus(config)# line vty 0 32
awplus(config-line)# accounting login USERS
```

To reset accounting for login sessions on the console, use the following commands:

```
awplus# configure terminal
awplus(config)# line console 0
awplus(config-line)# no accounting login
```

**Related commands**

aaa accounting commands

aaa accounting login

# authorization commands

**Overview** This command applies a command authorization method list, defined using the aaa authorization commands command, to console and VTY lines.

Use the **no** variant of this command to reset the command authorization configuration on the console and VTY lines.

**Syntax**

```
authorization commands <privilege-level> {default|<list-name>}
no authorization commands <privilege-level>
```

| Parameter | Description |
|---|---|
| `<privilege-level>` | The privilege level of the set of commands the method list will be applied to.<br>AlliedWare Plus defines three sets of commands, that are indexed by a level value:<br>**Level = 1**: All commands that can be accessed by a user with privilege level between 1 and 6 inclusive<br>**Level = 7:** All commands that can be accessed by a user with privilege level between 7 and 14 inclusive<br>**Level = 15**: All commands that can be accessed by a user with privilege level 15 |
| `default` | Configure the default authorization commands method list. |
| `<list-name>` | Configure a named authorization commands method list |

**Default** The **default** method list is applied to each console and VTY line by default.

**Mode** Line Configuration

**Usage notes** If the specified method list does not exist users will not be enable to execute any commands in the specified method list on the specified VTY lines.

**Example** To apply the TAC15 command authorization method list with privilege level 15 to VTY lines 0 to 5, use the following commands:

```
awplus# configure terminal
awplus(config)# line vty 0 5
awplus(config-line)# authorization commands 15 TAC15
```

To reset the command authorization configuration with privilege level 15 on VTY lines 0 to 5, use the following commands:

```
awplus# configure terminal
awplus(config)# line vty 0 5
awplus(config-line)# no authorization commands 15
```

**Related commands** aaa authorization commands

aaa authorization config-commands

tacacs-server host

**Command changes**

Version 5.4.6-2.1: command added

# clear aaa local user lockout

**Overview** Use this command to clear the lockout on a specific user account or all user accounts.

**Syntax** `clear aaa local user lockout {username <username>|all}`

| Parameter | Description |
|---|---|
| `username` | Clear lockout for the specified user. |
| `<username>` | Specifies the user account. |
| `all` | Clear lockout for all user accounts. |

**Mode** Privileged Exec

**Examples** To unlock the user account 'bob' use the following command:

```
awplus# clear aaa local user lockout username bob
```

To unlock all user accounts use the following command:

```
awplus# clear aaa local user lockout all
```

**Related commands** aaa local authentication attempts lockout-time

# debug aaa

**Overview** This command enables AAA debugging.

Use the **no** variant of this command to disable AAA debugging.

**Syntax**

```
debug aaa [accounting|all|authentication|authorization]
no debug aaa [accounting|all|authentication|authorization]
```

| Parameter | Description |
|---|---|
| `accounting` | Accounting debugging. |
| `all` | All debugging options are enabled. |
| `authentication` | Authentication debugging. |
| `authorization` | Authorization debugging. |

**Default** AAA debugging is disabled by default.

**Mode** Privileged Exec

**Examples** To enable authentication debugging for AAA, use the command:

```
awplus# debug aaa authentication
```

To disable authentication debugging for AAA, use the command:

```
awplus# no debug aaa authentication
```

**Related commands**

show debugging aaa

undebug aaa

# login authentication

**Overview**

Use this command to apply an AAA server for authenticating user login attempts from a console or remote logins on these console or VTY lines. The authentication method list must be specified by the **aaa authentication login** command. If the method list has not been configured by the **aaa authentication login** command, login authentication will fail on these lines.

Use the **no** variant of this command to reset AAA Authentication configuration to use the default method list for login authentication on these console or VTY lines.

**Command Syntax**

```
login authentication {default|<list-name>}
no login authentication
```

| Parameter | Description |
|---|---|
| `default` | The default authentication method list. If the default method list has not been configured by the aaa authentication login command, the local user database is used for user login authentication. |
| `<list-name>` | Named authentication server. |

**Default**

The default login authentication method list, as specified by the aaa authentication login command, is used to authenticate user login. If this has not been specified, the default is to use the local user database.

**Mode**

Line Configuration

**Examples**

To apply the authentication method list called `CONSOLE` to the console port terminal line (asyn 0), use the following commands:

```
awplus# configure terminal
awplus(config)# line console 0
awplus(config-line)# login authentication CONSOLE
```

To reset user authentication configuration on all VTY lines, use the following commands:

```
awplus# configure terminal
awplus(config)# line vty 0 32
awplus(config-line)# no login authentication
```

**Related commands**

aaa authentication login

line

# proxy-port

**Overview** Use this command to change the local UDP port used for communication between local RADIUS client applications and the RadSecProxy AAA application. Any unused UDP port may be selected. The default port is 1645.

Use the **no** variant of this command to change the UDP port back to the default of 1645.

**Syntax**

```
proxy-port <port>
no proxy-port
```

| Parameter | Description |
|---|---|
| *<port>* | UDP Port Number, 1-65536. |

**Default** The default port is 1645.

**Mode** RadSecProxy AAA Configuration Mode

**Usage notes** It is not necessary to change the value from the default unless UDP port 1645 is required for another purpose.RADIUS requests received on this port from external devices will be ignored. The port is only used for local (intra-device) communication.

**Example** To configure change the UDP port to 7001, use the following commands:

```
awplus# configure terminal
awplus(config)# radius-secure-proxy aaa
awplus(config-radsecproxy-aaa)# proxy-port 7001
```

**Related commands**

radius-secure-proxy aaa

server (radsecproxy-aaa)

server name-check

server trustpoint

# radius-secure-proxy aaa

**Overview** Use this command to enter the RadSecProxy AAA (authentication, authorization, and accounting) application configuration mode. This application allows local RADIUS-based clients on system to communicate with remote RadSec servers via a secure (TLS) proxy.

**Syntax**

```
radius-secure-proxy aaa
```

**Mode** Global Configuration Mode

**Example** To change mode from User Exec mode to the RadSecProxy AAA configuration mode, use the commands:

```
awplus# configure terminal
awplus(config)# radius-secure-proxy aaa
awplus(config-radsecproxy-aaa)#
```

**Related commands**

proxy-port

server (radsecproxy-aaa)

server name-check

server trustpoint

# server (radsecproxy-aaa)

**Overview** Use this command to add a server to the RadSecProxy AAA application. Local RADIUS client applications will attempt, via the proxy, to communicate with any RadSec servers that are operational (in addition to any non-TLS RADIUS servers that are configured).

Use the **no** variant of this command to delete a previously-configured server from the RadSecProxy AAA application.

**Syntax**

```
server {<hostname>|<ip-addr>} [timeout <1-1000>] [name-check {on|off}]
no server {<hostname>|<ip-addr>}
```

| Parameter | Description | |
|---|---|---|
| *<hostname>* | Hostname of RadSec server | |
| *<ip-addr>* | Specify the client IPv4 address, in dotted decimal notation (A.B.C.D). | |
| timeout | Specify the amount of time that the RadSecProxy AAA application should wait for replies from this server. RADIUS server timeout (which defaults to 5 seconds). | |
| <1-1000> | Time in seconds to wait for a server reply. | |
| name-check | Specify whether or not to enforce certificate name checking for this client. If the parameter is not specified then the global behavior, which defaults to **on**, is used. | |
| | on | Enable name checking for this client. |
| | off | Disable name checking for this client. |

**Mode** RadSecProxy AAA Configuration Mode

**Usage notes** The server may be specified by its domain name or by its IPv4 address. If a domain name is used, it must be resolvable using a configured DNS name server.

Each server may be configured with a timeout; if not specified, the global timeout value for RADIUS servers will be used. The global timeout may be changed using the **radius-server timeout** command. The default global timeout is 5 seconds.

Each server may be configured to use certificate name-checking; if not specified, the global behavior defined by **server name-check** or **no server name-check** will be used. If name checking is enabled, the Common Name portion of the subject field of the server's X.509 certificate must match the domain name or IP address specified in this command.

**Example** To add a server 'mynas.local' with a timeout of 3 seconds, and name checking off, use the commands:

```
awplus# configure terminal
awplus(config)# radius-secure-proxy aaa
awplus(config-radsecproxy-aaa)# server mynas.local name-check off
```

**Related commands**

proxy-port

radius-secure-proxy aaa

server name-check

server trustpoint

# server mutual-authentication

**Overview**

This command enables or disables mutual certificate authentication for all RadSecProxy servers. When enabled, the RadSecProxy AAA application will send a local X.509 certificate to the server when establishing a TLS connection.

Use the **no** variant of this command to disable mutual certificate validation causing the RadSecProxy AAA application to not transmit a certificate to the server.

***NOTE:*** *If mutual authentication is disabled on the client (AAA) application but enabled on the server, a connection will not be established.*

**Syntax**

```
server mutual-authentication
no server mutual-authentication
```

**Default**

Mutual authentication is enabled by default.

**Mode**

RadSecProxy AAA Configuration Mode

**Example**

Disable mutual certificate validation with the following command:

```
awplus# configure terminal
awplus(config)# radius-secure-proxy aaa
awplus(config-radsecproxy-aaa)# no server
mutual-authentication
```

**Related commands**

radius-secure-proxy aaa

server name-check

server (radsecproxy-aaa)

**Command changes**

Version 5.4.6-2.1: command added

# server name-check

**Overview** This command sets the global behavior for certificate name-checking for the RadSecProxy AAA application to **on**. This behavior will be used for all servers associated with the application that do not specify a behavior on a per-server basis. If name-checking is enabled, the Common Name portion of the subject field of the client's X.509 certificate must match the domain name or IP address specified in the **server (radsecproxy-aaa)** command.

Use the **no** variant of this command to set the global behavior for certificate name checking to **off**

**Syntax**

```
server name-check
no server name-check
```

**Default** Certificate name checking is on by default.

**Mode** RadSecProxy AAA Configuration Mode

**Example** Disable certificate name checking globally with the following command:

```
awplus# configure terminal
awplus(config)# radius-secure-proxy aaa
awplus(config-radsecproxy-aaa)# no server name-check
```

**Related commands**

proxy-port

radius-secure-proxy aaa

server (radsecproxy-aaa)

server trustpoint

# server trustpoint

**Overview**

This command adds one or more trustpoints to be used with the RadSecProxy AAA application. Multiple trustpoints may be specified, or the command may be executed more than once, to add multiple trustpoints to the application.

The **no** version of this command removes one or more trustpoints from the list of trustpoints associated with the application.

**Syntax**

```
server trustpoint [<trustpoint-list>]
no server trustpoint [<trustpoint-list>]
```

| Parameter | Description |
|---|---|
| *<trustpoint-list>* | Specify one or more trustpoints to be added or deleted. |

**Default**

By default, no trustpoints are associated with the application.

**Mode**

RadSecProxy AAA Configuration Mode

**Usage notes**

The device certificate associated with first trustpoint added to the application will be transmitted to remote servers. The certificate received from the remote server must have an issuer chain that terminates with the root CA certificate for any of the trustpoints that are associated with the application.

If no trustpoints are specified in the command, the trustpoint list will be unchanged.

If **no server trustpoint** is issued without specifying any trustpoints, then all trustpoints will be disassociated from the application.

**Example**

You can add multiple trustpoints to the RadSecProxy AAA application by executing the command multiple times:

```
awplus# configure terminal
awplus(config)# radius-secure-proxy aaa
awplus(config-radsecproxy-aaa)# server trustpoint example_1
awplus(config-radsecproxy-aaa)# server trustpoint example_2
```

Alternatively, add multiple trustpoints with a single command:

```
awplus(config-radsecproxy-aaa)# server trustpoint example_3
example_4
```

Disassociate all trustpoints from the RadSecProxy AAA application using the command:

```
awplus(config-radsecproxy-aaa)# no server trustpoint
```

**Related commands**

proxy-port

radius-secure-proxy aaa

server (radsecproxy-aaa)

server name-check

# show aaa local user locked

**Overview** This command displays the current number of failed attempts, last failure time and location against each user account attempting to log into the device.

Note that once the lockout count has been manually cleared by another privileged account using the clear aaa local user lockout command or a locked account successfully logs into the system after waiting for the lockout time, this command will display nothing for that particular account.

**Syntax**

```
show aaa local user locked
```

**Mode** User Exec and Privileged Exec

**Example** To display the current failed attempts for local users, use the command:

```
awplus# show aaa local user locked
```

**Output** Figure 44-1: Example output from the **show aaa local user locked** command

```
awplus# show aaa local user locked
Login           Failures Latest failure     From
bob                 3    05/23/14 16:21:37  ttyS0
manager             5    05/23/14 16:31:44  192.168.1.200
```

**Related commands**

aaa local authentication attempts lockout-time

aaa local authentication attempts max-fail

clear aaa local user lockout

# show aaa server group

**Overview** Use this command to list AAA users and any method lists applied to them.

**Syntax**

```
show aaa server group
```

**Mode** Privileged Exec

**Example** To show the AAA configuration on a device, use the command:

```
awplus# show aaa server group
```

**Output** Figure 44-2: Example output from **show aaa server group**

```
awplus#show aaa server group
User           List Name     Method                   Acct-Event
======== ==== ============= ================ ======= ==========
login    auth default       -                local   -
-------- ---- ------------- ---------------- ------- ----------
cmd-1    auth -             -                -       -
-------- ---- ------------- ---------------- ------- ----------
cmd-7    auth -             -                -       -
-------- ---- ------------- ---------------- ------- ----------
cmd-15   auth -             -                -       -
-------- ---- ------------- ---------------- ------- ----------
login    acct -             -                -       -
-------- ---- ------------- ---------------- ------- ----------
dot1x    auth default       radius           group   -
-------- ---- ------------- ---------------- ------- ----------
dot1x    acct vlan30_acct   rad_group_4      group   start-stop
-------- ---- ------------- ---------------- ------- ----------
auth-mac auth default       radius           group   -
-------- ---- ------------- ---------------- ------- ----------
auth-mac acct vlan10_acct   rad_group_vlan10 group   start-stop
-------- ---- ------------- ---------------- ------- ----------
auth-web auth default       radius           group   -
-------- ---- ------------- ---------------- ------- ----------
auth-web acct default       rad_group_3      group   start-stop
-------- ---- ------------- ---------------- ------- ----------
openvpn  auth -             -                -       -
-------- ---- ------------- ---------------- ------- ----------
isakmp   auth default       radius           group   -
-------- ---- ------------- ---------------- ------- ----------
```

**Related commands**

aaa accounting auth-mac

aaa accounting auth-web

aaa accounting dot1x

aaa accounting auth-mac

aaa authentication auth-web

aaa authentication dot1x

# show debugging aaa

**Overview** Use this command to see what debugging is turned on for AAA (Authentication, Authorization, Accounting).

**Syntax** `show debugging aaa`

**Mode** User Exec and Privileged Exec

**Example** To display the current debugging status of AAA, use the command:

```
awplus# show debug aaa
```

**Output** Figure 44-3: Example output from the **show debug aaa** command

```
AAA debugging status:
 Authentication debugging is on
 Accounting debugging is off
```

# show radius server group

**Overview** Use this command to show the RADIUS server group configuration.

**Syntax** `show radius server group [<group-name>]`

| Parameter | Description |
|---|---|
| *<group-name>* | RADIUS server group name. |

**Default** Command name is set to something by default.

**Mode** Privileged Exec

**Usage** Use this command with the *<group-name>* parameter to display information for a specific RADIUS server group, or without the parameter to display information for all RADIUS server groups.

**Example** To display information for all RADIUS server groups, use the command:

```
awplus# show radius server group
```

To display a information for a RADIUS server group named 'rad_group_list1', use the command:

```
awplus# show radius server group rad_group_list1
```

**Output** Figure 44-4: Example output from **show radius server group**

```
awplus#show radius server group
RADIUS Group Configuration
  Group Name : radius?
    Server Host/    Auth  Acct  Auth    Acct
    IP Address      Port  Port  Status  Status
    ----------------------------------------
    192.168.1.101   1812  1813  Active  Active
    192.168.1.102   1812  1813  Active  Active

  Group Name : rad_group_list1
    Server Host/    Auth  Acct  Auth    Acct
    IP Address      Port  Port  Status  Status
    ----------------------------------------
    192.168.1.101   1812  1813  Active  Active

  Group Name : rad_group_list2
    Server Host/    Auth  Acct  Auth    Acct
    IP Address      Port  Port  Status  Status
    ----------------------------------------
    192.168.1.102   1812  1813  Active  Active
```

Figure 44-5: Example output from **show radius server group rad_group_list1**

```
awplus#show radius server group rad_group_list1
RADIUS Group Configuration
  Group Name : rad_group_list1
    Server Host/    Auth  Acct  Auth    Acct
    IP Address      Port  Port  Status  Status
    ----------------------------------------
    192.168.1.101   1812  1813  Active  Active
```

**Related commands**

aaa group server

# undebug aaa

**Overview** This command applies the functionality of the **no** debug aaa command.

# 45 RADIUS Commands

## Introduction

**Overview** This chapter provides an alphabetical reference for commands used to configure the device to use RADIUS servers. For more information, see the RADIUS Feature Overview and Configuration Guide.

**Command List**


- "deadtime (RADIUS server group)" on page 2236
- "debug radius" on page 2237
- "ip radius source-interface" on page 2238
- "radius-server deadtime" on page 2239
- "radius-server host" on page 2240
- "radius-server key" on page 2243
- "radius-server retransmit" on page 2244
- "radius-server timeout" on page 2246
- "server (server group)" on page 2248
- "show debugging radius" on page 2250
- "show radius" on page 2251
- "undebug radius" on page 2254

# deadtime (RADIUS server group)

**Overview**

Use this command to configure the **deadtime** parameter for the RADIUS server group. This command overrides the global dead-time configured by the radius-server deadtime command. The configured deadtime is the time period in minutes to skip a RADIUS server for authentication or accounting requests if the server is "dead". Note that a RADIUS server is considered "dead" if there is no response from the server within a defined time period.

Use the **no** variant of this command to reset the deadtime configured for the RADIUS server group. If the global deadtime for RADIUS server is configured the value will be used for the servers in the group. The global deadtime for the RADIUS server is set to 0 minutes by default.

**Syntax**

```
deadtime <0-1440>
no deadtime
```

| Parameter | Description |
|---|---|
| *<0-1440>* | Amount of time in minutes. |

**Default**

The deadtime is set to 0 minutes by default.

**Mode**

Server Group Configuration

**Usage**

If the RADIUS server does not respond to a request packet, the packet is retransmitted the number of times configured for the **retransmit** parameter (after waiting for a **timeout** period to expire). The server is then marked "dead", and the time is recorded. The **deadtime** parameter configures the amount of time to skip a dead server; if a server is dead, no request message is sent to the server for the **deadtime** period.

**Examples**

To configure the deadtime for 5 minutes for the RADIUS server group "GROUP1", use the command:

```
awplus(config)# aaa group server radius GROUP1
awplus(config-sg)# server 192.168.1.1
awplus(config-sg)# deadtime 5
```

To remove the deadtime configured for the RADIUS server group "GROUP1", use the command:

```
awplus(config)# aaa group server radius GROUP1
awplus(config-sg)# no deadtime
```

**Related commands**

aaa group server

radius-server deadtime

# debug radius

**Overview** This command enables RADIUS debugging. If no option is specified, all debugging options are enabled.

Use the **no** variant of this command to disable RADIUS debugging. If no option is specified, all debugging options are disabled.

**Syntax**

```
debug radius [packet|event|all]
no debug radius [packet|event|all]
```

| Parameter | Description |
|---|---|
| `packet` | Debugging for RADIUS packets is enabled or disabled. |
| `event` | Debugging for RADIUS events is enabled or disabled. |
| `all` | Enable or disable all debugging options. |

**Default** RADIUS debugging is disabled by default.

**Mode** Privileged Exec

**Examples** To enable debugging for RADIUS packets, use the command:

```
awplus#  debug radius packet
```

To enable debugging for RADIUS events, use the command:

```
awplus#  debug radius event
```

To disable debugging for RADIUS packets, use the command:

```
awplus# no debug radius packet
```

To disable debugging for RADIUS events, use the command:

```
awplus# no debug radius event
```

**Related commands** show debugging radius

undebug radius

# ip radius source-interface

**Overview** This command configures the source IP address of every outgoing RADIUS packet to use a specific IP address or the IP address of a specific interface. If the specified interface is down or there is no IP address on the interface, then the source IP address of outgoing RADIUS packets depends on the interface the packets leave.

Use the **no** variant of this command to remove the source interface configuration. The source IP address in outgoing RADIUS packets will be the IP address of the interface from which the packets are sent.

**Syntax**

```
ip radius source-interface {<interface>|<ip-address>}
no ip radius source-interface
```

| Parameter | Description |
|---|---|
| *<interface>* | Interface name. |
| *<ip-address>* | IP address in the dotted decimal format A.B.C.D. |

**Default** Source IP address of outgoing RADIUS packets depends on the interface the packets leave.

**Mode** Global Configuration

**Examples** To configure all outgoing RADIUS packets to use the IP address of the interface "vlan1" for the source IP address, use the following commands:

```
awplus# configure terminal
awplus(config)# ip radius source-interface vlan1
```

To configure the source IP address of all outgoing RADIUS packets to use 192.168.1.10, use the following commands:

```
awplus# configure terminal
awplus(config)# ip radius source-interface 192.168.1.10
```

To reset the source interface configuration for all outgoing RADIUS packets, use the following commands:

```
awplus# configure terminal
awplus(config)# no ip radius source-interface
```

**Related commands** radius-server host

# radius-server deadtime

**Overview**

Use this command to specify the global **deadtime** for all RADIUS servers. If a RADIUS server is considered dead, it is skipped for the specified deadtime. This command specifies for how many minutes a RADIUS server that is not responding to authentication requests is passed over by requests for RADIUS authentication.

Use the **no** variant of this command to reset the global deadtime to the default of 0 seconds, so that RADIUS servers are not skipped even if they are dead.

**Syntax**

```
radius-server deadtime <minutes>
no radius-server deadtime
```

| Parameter | Description |
|---|---|
| *<minutes>* | RADIUS server deadtime in minutes in the range 0 to 1440 (24 hours). |

**Default**

The default RADIUS deadtime configured on the system is 0 seconds.

**Mode**

Global Configuration

**Usage**

The RADIUS client considers a RADIUS server to be dead if it fails to respond to a request after it has been retransmitted as often as specified globally by the radius-server retransmit command or for the server by the radius-server host command. To improve RADIUS response times when some servers may be unavailable, set a **deadtime** to skip dead servers.

**Examples**

To set the dead time of the RADIUS server to 60 minutes, use the following commands:

```
awplus# configure terminal
awplus(config)# radius-server deadtime 60
```

To disable the dead time of the RADIUS server, use the following commands:

```
awplus# configure terminal
awplus(config)# no radius-server deadtime
```

**Related commands**

deadtime (RADIUS server group)

radius-server host

radius-server retransmit

# radius-server host

**Overview** Use this command to specify a remote RADIUS server host for authentication or accounting, and to set server-specific parameters. The parameters specified with this command override the corresponding global parameters for RADIUS servers. This command specifies the IP address or host name of the remote RADIUS server host and assigns authentication and accounting destination UDP port numbers.

This command adds the RADIUS server address and sets parameters to the RADIUS server. The RADIUS server is added to the running configuration after you issue this command. If parameters are not set using this command then common system settings are applied.

Use the **no** variant of this command to remove the specified server host as a RADIUS authentication and/or accounting server and set the destination port to the default RADIUS server port number (1812).

**Syntax**

```
radius-server host {<host-name>|<ip-address>} [acct-port
<0-65535>] [auth-port <0-65535>] [key <key-string>] [retransmit
<0-100>] [timeout <1-1000>]
```

```
no radius-server host {<host-name>|<ip-address>} [acct-port
<0-65535>] [auth-port <0-65535>]
```

| Parameter | Description |
|---|---|
| *<host-name>* | Server host name. The DNS name of the RADIUS server host. |
| *<ip-address>* | The IP address of the RADIUS server host. |
| `acct-port` | Accounting port. Specifies the UDP destination port for RADIUS accounting requests. If 0 is specified, the server is not used for accounting. The default UDP port for accounting is 1813. |
| *<0-65535>* | UDP port number. (Accounting port number is set to (accounting port number is set to 1813 by default) Specifies the UDP destination port for RADIUS accounting requests. If 0 is specified, the host is not used for accounting. |
| `auth-port` | Authentication port. Specifies the UDP destination port for RADIUS authentication requests. If 0 is specified, the server is not used for authentication. The default UDP port for authentication is 1812. |
| *<0-65535>* | UDP port number (authentication port number is set to 1812 by default). Specifies the UDP destination port for RADIUS authentication requests. If 0 is specified, the host is not used for authentication. |
| `timeout` | Specifies the amount of time to wait for a response from the server. If this parameter is not specified the global value configured by the **radius-server timeout** command is used. |

| Parameter | Description |
|---|---|
| *<1-1000>* | Time in seconds to wait for a server reply (timeout is set to 5 seconds by default). The time interval (in seconds to wait for the RADIUS server to reply before retransmitting a request or considering the server dead. This setting overrides the global value set by the **radius-server timeout** command. If no timeout value is specified for this server, the global value is used. |
| `retransmit` | Specifies the number of retries before skip to the next server. If this parameter is not specified the global value configured by the **radius-server retransmit** command is used. |
| *<0-100>* | Maximum number of retries (maximum number of retries is set to 3 by default). The maximum number of times to resend a RADIUS request to the server, if it does not respond within the timeout interval, before considering it dead and skipping to the next RADIUS server. This setting overrides the global setting of the **radius- server retransmit** command. If no retransmit value is specified, the global value is used. |
| `key` | Set shared secret key with RADIUS servers. |
| *<key-string>* | Shared key string applied. Specifies the shared secret authentication or encryption key for all RADIUS communications between this device and the RADIUS server. This key must match the encryption used on the RADIUS daemon. All leading spaces are ignored, but spaces within and at the end of the string are used.<br>If spaces are used in the string, do not enclose the string in quotation marks unless the quotation marks themselves are part of the key. This setting overrides the global setting of the **radius-server key** command. If no key value is specified, the global value is used. |

**Default** The RADIUS client address is not configured (null) by default. No RADIUS server is configured.

**Mode** Global Configuration

**Usage** Multiple **radius -server host** commands can be used to specify multiple hosts. The software searches for hosts in the order they are specified. If no host-specific timeout, retransmit, or key values are specified, the global values apply to that host. If there are multiple RADIUS servers for this client, use this command multiple times—once to specify each server.

If you specify a host without specifying the auth port or the acct port, it will by default be configured for both authentication and accounting, using the default UDP ports. To set a host to be a RADIUS server for authentication requests only, set the **acct-port** parameter to 0; to set the host to be a RADIUS server for accounting requests only, set the auth-port parameter to 0.

A RADIUS server is identified by IP address, authentication port and accounting port. A single host can be configured multiple times with different authentication or accounting ports. All the RADIUS servers configured with this command are included in the predefined RADIUS server group radius, which may be used by AAA authentication, authorization and accounting commands. The client transmits

(and retransmits, according to the **retransmit** and **timeout** parameters) RADIUS authentication or accounting requests to the servers in the order you specify them, until it gets a response.

## Examples

To add the RADIUS server `10.0.0.20`, use the following commands:

```
awplus# configure terminal
awplus(config)# radius-server host 10.0.0.20
```

To set the secret key to **allied** on the RADIUS server `10.0.0.20`, use the following commands:

```
awplus# configure terminal
awplus(config)# radius-server host 10.0.0.20 key allied
```

To delete the RADIUS server `10.0.0.20`, use the following commands:

```
awplus# configure terminal
awplus(config)# no radius-server host 10.0.0.20
```

To configure `rad1.company.com` for authentication only, use the following commands:

```
awplus# configure terminal
awplus(config)# radius-server host rad1.company.com acct-port 0
```

To remove the RADIUS server `rad1.company.com` configured for authentication only, use the following commands:

```
awplus# configure terminal
awplus(config)# no radius-server host rad1.company.com
acct-port 0
```

To configure `rad2.company.com` for accounting only, use the following commands:

```
awplus# configure terminal
awplus(config)# radius-server host rad2.company.com auth-port 0
```

To configure 192.168.1.1 with authentication port 1000, accounting port 1001 and retransmit count 5, use the following commands:

```
awplus# configure terminal
awplus(config)# radius-server host 192.168.1.1 auth-port 1000
acct-port 1001 retransmit 5
```

## Command changes

Version 5.4.9-2.1: **key-encrypted** parameter added.

## Related commands

aaa group server

radius-server key

radius-server retransmit

radius-server timeout

# radius-server key

**Overview** This command sets a global secret key for RADIUS authentication on the device. The shared secret text string is used for RADIUS authentication between the device and a RADIUS server.

Note that if no secret key is explicitly specified for a RADIUS server, the global secret key will be used for the shared secret for the server.

Use the **no** variant of this command to reset the secret key to the default (null).

**Syntax**

```
radius-server key <key-string>
no radius-server key
```

| Parameter | Description |
|---|---|
| *<key-string>* | Shared secret among RADIUS server and 802.1X client. |

**Default** The RADIUS server secret key on the system is not set by default (null).

**Mode** Global Configuration

**Usage** Use this command to set the global secret key shared between this client and its RADIUS servers. If no secret key is specified for a particular RADIUS server using the **radius-server host** command, this global key is used.

After enabling AAA authentication with the **aaa authentication login** command, set the authentication and encryption key using the **radius-server key** command so the key entered matches the key used on the RADIUS server.

**Examples** To set the global secret key to **allied** for RADIUS server, use the following commands:

```
awplus# configure terminal
awplus(config)# radius-server key allied
```

To set the global secret key to **secret** for RADIUS server, use the following commands:

```
awplus# configure terminal
awplus(config)# radius-server key secret
```

To delete the global secret key for RADIUS server, use the following commands:

```
awplus# configure terminal
awplus(config)# no radius-server key
```

**Related commands** radius-server host

# radius-server retransmit

**Overview** This command sets the retransmit counter to use RADIUS authentication on the device. This command specifies how many times the device transmits each RADIUS request to the RADIUS server before giving up.

This command configures the **retransmit** parameter for RADIUS servers globally. If the **retransmit** parameter is not specified for a RADIUS server by the **radius-server host** command then the global configuration set by this command is used for the server instead.

Use the **no** variant of this command to reset the re-transmit counter to the default (3).

**Syntax**

```
radius-server retransmit <retries>
no radius-server retransmit
```

| Parameter | Description |
|---|---|
| *<retries>* | RADIUS server retries in the range <0-100>.<br>The number of times a request is resent to a RADIUS server that does not respond, before the server is considered dead and the next server is tried. If no retransmit value is specified for a particular RADIUS server using the **radius-server host** command, this global value is used. |

**Default** The default RADIUS retransmit count on the device is 3.

**Mode** Global Configuration

**Examples** To set the RADIUS **retransmit** count to 1, use the following commands:

```
awplus# configure terminal
awplus(config)# radius-server retransmit 1
```

To set the RADIUS **retransmit** count to the default (3), use the following commands:

```
awplus# configure terminal
awplus(config)# no radius-server retransmit
```

To configure the RADIUS **retransmit** count globally with 5, use the following commands:

```
awplus# configure terminal
awplus(config)# radius-server retransmit 5
```

To disable retransmission of requests to a RADIUS server, use the following commands:

```
awplus# configure terminal
awplus(config)# radius-server retransmit 0
```

**Related commands**

radius-server deadtime

radius-server host

# radius-server timeout

**Overview** Use this command to specify the RADIUS global timeout value. This is how long the device waits for a reply to a RADIUS request before retransmitting the request, or considering the server to be dead. If no timeout is specified for the particular RADIUS server by the **radius-server host** command, it uses this global timeout value.

Note that this command configures the **timeout** parameter for RADIUS servers globally.

The **no** variant of this command resets the transmit timeout to the default (5 seconds).

**Syntax**

```
radius-server timeout <seconds>
no radius-server timeout
```

| Parameter | Description |
|---|---|
| *<seconds>* | RADIUS server timeout in seconds in the range 1 to 1000.<br>The global time in seconds to wait for a RADIUS server to reply to a request before retransmitting the request, or considering the server to be dead (depending on the **radius-server retransmit** command). |

**Default** The default RADIUS transmit timeout on the system is 5 seconds.

**Mode** Global Configuration

**Examples** To globally set the device to wait 20 seconds before retransmitting a RADIUS request to unresponsive RADIUS servers, use the following commands:

```
awplus# configure terminal
awplus(config)# radius-server timeout 20
```

To set the RADIUS **timeout** parameter to 1 second, use the following commands:

```
awplus# configure terminal
awplus(config)# radius-server timeout 1
```

To set the RADIUS **timeout** parameter to the default (5 seconds), use the following commands:

```
awplus# configure terminal
awplus(config)# no radius-server timeout
```

To configure the RADIUS server **timeout** period globally with 3 seconds, use the following commands:

```
awplus# configure terminal
awplus(config)# radius-server timeout 3
```

To reset the global **timeout** period for RADIUS servers to the default, use the following command:

```
awplus# configure terminal
awplus(config)# no radius-server timeout
```

**Related commands**

radius-server deadtime

radius-server host

radius-server retransmit

# server (server group)

**Overview** This command adds a RADIUS server to a server group in Server-Group Configuration mode. The RADIUS server should be configured by the radius-server host command.

The server is appended to the server list of the group and the order of configuration determines the precedence of servers. If the server exists in the server group already, it will be removed before added as a new server.

The server is identified by IP address and authentication and accounting UDP port numbers. So a RADIUS server can have multiple entries in a group with different authentication and/or accounting UDP ports. The **auth-port** specifies the UDP destination port for authentication requests to the server. To disable authentication for the server, set `auth-port` to 0. If the authentication port is missing, the default port number is 1812. The **acct-port** specifies the UDP destination port for accounting requests to the server. To disable accounting for the server, set `acct-port` to 0. If the accounting port is missing, the default port number is 1812.

Use the **no** variant of this command to remove a RADIUS server from the server group.

**Syntax**

```
server {<hostname>|<ip-address>} [auth-port
<0-65535>][acct-port <0-65535>]
```

```
no server {<hostname>|<ip-address>} [auth-port
<0-65535>][acct-port <0-65535>]
```

| Parameter | Description |
|---|---|
| *<hostname>* | Server host name |
| *<ip-address>* | Server IP address<br>The server is identified by IP address, authentication and accounting UDP port numbers. So a RADIUS server can have multiple entries in a group with different authentication and/or accounting UDP ports. |
| `auth-port` | Authentication port<br>The **auth-port** specifies the UDP destination port for authentication requests to the server. To disable authentication for the server, set **auth-port** to 0. If the authentication port is missing, the default port number is 1812. |
| *<0-65535>* | UDP port number (default: 1812) |
| `acct-port` | Accounting port<br>The **acct-port** specifies the UDP destination port for accounting requests to the server. To disable accounting for the server, set **acct-port** to 0. If the accounting port is missing, the default port number is 1813. |
| *<0-65535>* | UDP port number (default: 1813) |

**Default** The default Authentication port number is 1812 and the default Accounting port number is 1813.

**Mode** Server Group Configuration

**Usage notes** The RADIUS server to be added must be configured by the **radius-server host** command. In order to add or remove a server, the **auth-port** and **acct-port** parameters in this command must be the same as the corresponding parameters in the **radius-server host** command.

**Examples** To create a RADIUS server group RAD_AUTH1 for authentication, use the following commands:

```
awplus# configure terminal
awplus(config)# aaa group server radius RAD_AUTH1
awplus(config-sg)# server 192.168.1.1 acct-port 0
awplus(config-sg)# server 192.168.2.1 auth-port 1000 acct-port
0
```

To create a RADIUS server group RAD_ACCT1 for accounting, use the following commands:

```
awplus# configure terminal
awplus(config)# aaa group server radius RAD_ACCT1
awplus(config-sg)# server 192.168.2.1 auth-port 0 acct-port
1001
awplus(config-sg)# server 192.168.3.1 auth-port 0
```

To remove server 192.168.3.1 from the existing server group **GROUP1**, use the following commands:

```
awplus# configure terminal
awplus(config)# aaa group server radius GROUP1
awplus(config-sg)# no server 192.168.3.1
```

**Related commands**

aaa accounting login

aaa authentication login

aaa group server

radius-server host

# show debugging radius

**Overview** This command displays the current debugging status for the RADIUS servers.

**Syntax** `show debugging radius`

**Mode** User Exec and Privileged Exec

**Example** To display the current debugging status of RADIUS servers, use the command:

```
awplus# show debugging radius
```

**Output** Figure 45-1: Example output from the **show debugging radius** command

```
RADIUS debugging status:
 RADIUS event debugging is off
 RADIUS packet debugging is off
```

# show radius

**Overview** This command displays the current RADIUS server configuration and status.

**Syntax** `show radius`

**Mode** User Exec and Privileged Exec

**Example** To display the current status of RADIUS servers, use the command:

```
awplus# show radius
```

**Output** Figure 45-2: Example output from the **show radius** command showing RADIUS servers

```
RADIUS Global Configuration
 Source Interface : not configured
 Secret Key : secret
 Timeout : 5 sec
 Retransmit Count : 3
 Deadtime : 20 min
Server Host : 192.168.1.10
 Authentication Port : 1812
 Accounting Port : 1813
 Secret Key : secret
 Timeout : 3 sec
 Retransmit Count : 2
Server Host : 192.168.1.11
 Authentication Port : 1812
 Accounting Port : not configured

Server Name/   Auth   Acct   Auth     Acct
IP Address     Port   Port   Status   Status
-------------------------------------------------------------
192.168.1.10   1812   1813   Alive    Alive
192.168.1.11   1812   N/A    Alive    N/A
```

**Example** See the sample output below showing RADIUS client status and RADIUS configuration:

```
awplus# show radius
```

**Output** Figure 45-3: Example output from the **show radius** command showing RADIUS client status

```
RADIUS global interface name: awplus
 Secret key:
 Timeout: 5
 Retransmit count: 3
 Deadtime: 0

Server Address: 150.87.18.89
 Auth destination port: 1812
 Accounting port: 1813
 Secret key: swg
 Timeout: 5
 Retransmit count: 3
 Deadtime: 0
```

| Output Parameter | Meaning |
|---|---|
| `Source Interface` | The interface name or IP address to be used for the source address of all outgoing RADIUS packets. |
| `Secret Key` | A shared secret key to a radius server. |
| `Timeout` | A time interval in seconds. |
| `Retransmit Count` | The number of retry count if a RADIUS server does not response. |
| `Deadtime` | A time interval in minutes to mark a RADIUS server as “dead”. |
| `Interim-Update` | A time interval in minutes to send Interim-Update Accounting report. |
| `Group Deadtime` | The deadtime configured for RADIUS servers within a server group. |
| `Server Host` | The RADIUS server hostname or IP address. |
| `Authentication Port` | The destination UDP port for RADIUS authentication requests. |
| `Accounting Port` | The destination UDP port for RADIUS accounting requests. |

| Output Parameter | Meaning | |
|---|---|---|
| `Auth Status` | The status of the authentication port.<br>The status ("dead", "error", or "alive") of the RADIUS authentication server and, if dead, how long it has been dead for. | |
| | `Alive` | The server is alive. |
| | `Error` | The server is not responding. |
| | `Dead` | The server is detected as dead and it will not be used for deadtime period. The time displayed in the output shows the server is in dead status for that amount of time. |
| | `Unknown` | The server is never used or the status is unknown. |
| `Acct Status` | The status of the accounting port.<br>The status ("dead", "error", or "alive") of the RADIUS accounting server and, if dead, how long it has been dead for. | |

# undebug radius

**Overview** This command applies the functionality of the **no** debug radius command.

# 46 Local RADIUS Server Commands

## Introduction

**Overview** This chapter provides an alphabetical reference for commands used to configure the local RADIUS server on the device. For more information, see the Local RADIUS Server Feature Overview and Configuration Guide.

**Command List**


- "attribute" on page 2257
- "authentication" on page 2259
- "client (radsecproxy-srv)" on page 2260
- "client mutual-authentication" on page 2262
- "client name-check" on page 2263
- "client trustpoint" on page 2264
- "clear radius local-server statistics" on page 2265
- "copy fdb-radius-users (to file)" on page 2266
- "copy local-radius-user-db (from file)" on page 2268
- "copy local-radius-user-db (to file)" on page 2269
- "crypto pki enroll local (deleted)" on page 2270
- "crypto pki enroll local local-radius-all-users (deleted)" on page 2271
- "crypto pki enroll local user (deleted)" on page 2272
- "crypto pki export local pem (deleted)" on page 2273
- "crypto pki export local pkcs12 (deleted)" on page 2274
- "crypto pki trustpoint local (deleted)" on page 2275
- "debug crypto pki (deleted)" on page 2276
- "domain-style" on page 2277
- "egress-vlan-id" on page 2278

- "egress-vlan-name" on page 2279
- "group" on page 2280
- "nas" on page 2281
- "help radius-attribute" on page 2282
- "radius-secure-proxy local-server" on page 2284
- "radius-server local" on page 2285
- "server auth-port" on page 2286
- "server enable" on page 2287
- "show radius local-server group" on page 2288
- "show radius local-server nas" on page 2289
- "show radius local-server statistics" on page 2290
- "show radius local-server user" on page 2291
- "user (RADIUS server)" on page 2293
- "vlan (RADIUS server)" on page 2295

# attribute

**Overview** Use this command to define a RADIUS attribute for the local RADIUS server user group.

For a complete list of defined RADIUS attributes and values, see the Local RADIUS Server Feature Overview and Configuration Guide.

When used with the **value** parameter the **attribute** command configures RADIUS attributes to the user group. If the specified attribute is already defined then it is replaced with the new value.

Use the **no** variant of this command to delete an attribute from the local RADIUS server user group.

**Syntax**

```
attribute [repeated] {<attribute-name>|<attribute-id>} <value>
no attribute {<attribute-name>|<attribute-id>}
```

| Parameter | Description |
|---|---|
| `repeated` | This optional parameter allows you to set multiple instances of the same attribute name or attribute id. |
| *<attribute-name>* | RADIUS attribute name for standard attributes or Vendor-Specific attributes (see the Local RADIUS Server Feature Overview and Configuration Guide for tables of attributes). |
| *<attribute-id>* | RADIUS attribute numeric identifier for standard attributes. |
| *<value>* | RADIUS attribute value. |

**Default** By default, no attributes are configured.

**Mode** RADIUS Server Group Configuration

**Usage notes** For the Standard attributes, the attribute may be specified using either the attribute name, or its numeric identifier. For example, the command:

```
awplus(config-radsrv-group)# attribute acct-terminate-cause 1
```

will produce the same results as the command:

```
awplus(config-radsrv-group)# attribute 49 1
```

In the same way, where the specific attribute has a pre-defined value, the parameter *<value>* may be substituted with the Value Name or with its numeric value, for example the command:

```
awplus(config-radsrv-group)# attribute acct-terminate-cause
user-request
```

will produce the same results as the command:

```
awplus(config-radsrv-group)# attribute 49 1
```

or the command:

```
awplus(config-radsrv-group)# attribute acct-terminate-cause 1
```

You can define more than one instance of an attribute name (or id) by using the **repeated** parameter. For example:

```
awplus(config-radsrv-group)# attribute repeated
Nas-filter-Rule "deny in tcp from any to 0.0.0.0/0 23”
```

```
awplus(config-radsrv-group)# attribute repeated
Nas-filter-Rule "deny in tcp from any to fe80::b1 23"
```

## Examples

To define the attribute name ‘Service-Type’ with Administrative User (6) to the RADIUS User Group ‘Admin’, use the following commands:

```
awplus# configure terminal
awplus(config)# radius-server local
awplus(config-radsrv)# group Admin
awplus(config-radsrv-group)# attribute Service-Type 6
```

To delete the attribute ‘Service-Type’ from the RADIUS User Group ‘Admin’, use the following commands:

```
awplus# configure terminal
awplus(config)# radius-server local
awplus(config-radsrv)# group Admin
awplus(config-radsrv-group)# no attribute Service-Type
```

To define multiple values for attribute 'NAS-Filter-Rule', use the commands:

```
awplus# configure terminal
awplus(config)# radius-server local
awplus(config-radsrv)# group dynamicAcl
awplus(config-radsrv-group)# attribute repeated
NAS-Filter-Rule "deny in tcp from any to 0.0.0.0/0 23"
awplus(config-radsrv-group)# attribute repeated
NAS-Filter-Rule "deny in tcp from any to fe80::b1 23"
```

To delete a specific value from the attribute 'NAS-Filter-Rule', use the commands:

```
awplus# configure terminal
awplus(config)# radius-server local
awplus(config-radsrv)# group dynamicAcl
awplus(config-radsrv-group)# no attribute NAS-Filter-Rule "deny
in tcp from any to 0.0.0.0/0 23"
```

## Related commands

egress-vlan-id

egress-vlan-name

help radius-attribute

## Command changes

Version 5.5.0-1.1: **repeated** parameter added

# authentication

**Overview** Use this command to enable the specified authentication methods on the local RADIUS server.

Use the **no** variant of this command to disable specified authentication methods on the local RADIUS server.

**Syntax**

```
authentication {mac|eapmd5|eaptls|peap}
no authentication {mac|eapmd5|eaptls|peap}
```

| Parameter | Description |
|---|---|
| mac | Enable MAC authentication method. |
| eapmd5 | Enable EAP-MD5 authentication method. |
| eaptls | Enable EAP-TLS authentication method. |
| peap | Enable EAP-PEAP authentication method. |

**Default** All authentication methods are enabled by default.

**Mode** RADIUS Server Configuration

**Examples** The following commands enable EAP-MD5 authentication methods on the local RADIUS server.

```
awplus# configure terminal
awplus(config)# radius-server local
awplus(config-radsrv)# authentication eapmd5
```

The following commands disable EAP-MD5 authentication methods on Local RADIUS server.

```
awplus# configure terminal
awplus(config)# radius-server local
awplus(config-radsrv)# no authentication eapmd5
```

**Related commands** server enable

show radius local-server statistics

# client (radsecproxy-srv)

**Overview**

Use this command to add a RadSec client (for example, a NAS device) to the RadSecProxy local-server application. The application will accept RADIUS requests from all configured clients.

Use the **no** variant of this command to delete a previously-configured client from the RadSecProxy local-server application.

**Syntax**

```
client {<hostname>|<ip-addr>} [name-check {on|off}]
no client {<hostname>|<ip-addr>}
```

| Parameter | Description | |
|---|---|---|
| *<hostname>* | Hostname of client. | |
| *<ip-addr>* | Specify the client IPv4 address, in dotted decimal notation (A.B.C.D). | |
| `name-check` | Specify whether or not to enforce certificate name checking for this client. If the parameter is not specified then the global behavior, which defaults to **on**, is used. | |
| | `on` | Enable name checking for this client. |
| | `off` | Disable name checking for this client. |

**Mode**

RadSecProxy Local Server Configuration

**Usage notes**

The client may be specified by its domain name or by its IPv4 address. If a domain name is used, it must be resolvable using a configured DNS name server.

Each client may be configured to use certificate name-checking; if not specified, the global behavior defined by **client name-check** or **no client name-check** will be used. If name checking is enabled, the Common Name portion of the subject field of the client's X.509 certificate must match the domain name or IP address specified in this command.

***NOTE:*** *If mutual authentication is disabled then this parameter has no effect, see the client mutual-authentication command.*

**Example**

To add a client called 'mynas.local' with certificate name checking **off**, use the commands:

```
awplus# configure terminal
awplus(config)# radius-secure-proxy local-server
awplus(config-radsecproxy-srv)# client mynas.local name-check
off
```

**Related commands**

client mutual-authentication

client name-check

client trustpoint

radius-secure-proxy local-server

# client mutual-authentication

**Overview**

This command enables or disables mutual certificate authentication for all RadSecProxy clients. When enabled, the RadSecProxy local-server application will request and validate an X.509 certificate from the client when establishing a connection.

The **no** variant of this command disables mutual certificate validation. The local-server application will still transmit the local server certificate to the client, but will not expect or validate a certificate from the client.

**Syntax**

```
client mutual-authentication
no client mutual-authentication
```

**Default**

Mutual authentication is enabled by default.

**Mode**

RadSecProxy Local Server Configuration

**Example**

Disable mutual certificate validation with the following command:

```
awplus# configure terminal
awplus(config)# radius-secure-proxy local-server
awplus(config-radsecproxy-srv)# no client
mutual-authentication
```

**Related commands**

client (radsecproxy-srv)

client name-check

radius-secure-proxy local-server

**Command changes**

Version 5.4.6-2.1: command added

# client name-check

**Overview**

This command sets the global behavior for certificate name-checking for the RadSecProxy localserver application to **on**. This behavior will be used for all clients associated with the application that do not specify a behavior on a per-client basis. If name-checking is enabled, the Common Name portion of the subject field of the client's X.509 certificate must match the domain name or IP address specified in the **client (radsecproxy-aaa)** command.

Use the **no** variant of this command to set the global behavior for certificate name checking to **off**

**Syntax**

```
client name-check
no client name-check
```

**Default**

Certificate name checking is on by default.

**Mode**

RadSecProxy Local Server Configuration

**Example**

Disable certificate name checking globally with the following command:

```
awplus# configure terminal
awplus(config)# radius-secure-proxy local-server
awplus(config-radsecproxy-srv)# no client name-check
```

**Related commands**

client (radsecproxy-srv)

client trustpoint

radius-secure-proxy local-server

# client trustpoint

**Overview**

This command adds one or more trustpoints to be used with the RadSecProxy local-server application. Multiple trustpoints may be specified, or the command may be executed more than once, to add multiple trustpoints to the application.

The **no** version of this command removes one or more trustpoints from the list of trustpoints associated with the application.

**Syntax**

```
client trustpoint [<trustpoint-list>]
no client trustpoint [<trustpoint-list>]
```

| Parameter | Description |
|---|---|
| *<trustpoint-list>* | Specify one or more trustpoints to be added or deleted. |

**Mode**

RadSecProxy Local Server Configuration

**Usage notes**

The device certificate associated with the first trustpoint added to the application will be transmitted to remote servers. The certificate received from the remote server must have an issuer chain that terminates with the root CA certificate for any of the trustpoints that are associated with the application.

If you enter **client trustpoint** without specifying a trustpoint, the trustpoint list will be unchanged.

If you enter **no client trustpoint** without specifying a trustpoint, all trustpoints will be disassociated from the application.

**Example**

You can add multiple trustpoints to the RadSecProxy local-server by executing the command multiple times:

```
awplus# configure terminal
awplus(config)# radius-secure-proxy local-server
awplus(config-radsecproxy-srv)# client trustpoint example_1
awplus(config-radsecproxy-srv)# client trustpoint example_2
```

Alternatively, add multiple trustpoints with a single command:

```
awplus(config-radsecproxy-srv)# client trustpoint example_3
example_4
```

Disassociate all trustpoints from the RadSecProxy local-server application using the command:

```
awplus(config-radsecproxy-srv)# no client trustpoint
```

**Related commands**

client (radsecproxy-srv)

client name-check

radius-secure-proxy local-server

# clear radius local-server statistics

**Overview** Use this command to clear the statistics stored on the device for the local RADIUS server.

Use this command without any parameters to clear all types of local RADIUS server statistics.

**Syntax**

```
clear radius local-server statistics [nas|server|user]
```

| Parameter | Description |
|---|---|
| nas | Clear the NAS (Network Access Server) statistics on the device. For example, clearing statistics stored for NAS server invalid passwords. |
| server | Clear the Local RADIUS Server statistics on the device. For example, clearing Local RADIUS Servers statistics for all failed login attempts. |
| user | Clear the Local RADIUS Server user statistics. For example, clearing statistics stored for the number of successful user logins. |

**Mode** Privileged Exec

**Usage** Refer to the sample output for the show radius local-server statistics for further information about the type of statistics each parameter option for this command clears. Both the **nas** and **server** parameters clear unknown username and invalid passwords statistics, while the `user` parameter clears the number of successful and failed logins for each local RADIUS server user.

**Examples** To clear the NAS (Network Access Server) statistics stored on the device, use the command:

```
awplus# clear radius local-server statistics nas
```

To clear the local RADIUS server statistics stored on the device, use the command:

```
awplus# clear radius local-server statistics server
```

To clear the local RADIUS server user statistics stored on the device, use the command:

```
awplus# clear radius local-server statistics user
```

**Related commands** show radius local-server statistics

# copy fdb-radius-users (to file)

**Overview** Use this command to create a set of local RADIUS server users from MAC addresses in the local FDB. A local RADIUS server user created using this command can be used for MAC authentication.

**Syntax**

```
copy fdb-radius-users
{local-radius-user-db|nvs|flash|card|usb|debug|tftp|scp|
fserver|<url>} [interface <port>] [vlan <vid>] [group <name>]
[export-vlan [<radius-group-name>]]
```

| Parameter | Description |
|---|---|
| `local-radius-user-db` | Copy the local RADIUS server users created to the local RADIUS server. |
| `nvs` | Copy the local RADIUS server users created to NVS memory. |
| `flash` | Copy the local RADIUS server users created to Flash memory. |
| `card` | Copy the local RADIUS server users created to SD card. |
| `usb` | Copy the local RADIUS server users created to USB storage device. |
| `debug` | Copy the local RADIUS server users created to debug. |
| `tftp` | Copy the local RADIUS server users created to the TFTP destination. |
| `scp` | Copy the local RADIUS server users created to the SCP destination. |
| `fserver` | Copy the local RADIUS server users created to the remote file server. |
| `<url>` | Copy the local RADIUS server users created to the specified URL. |
| `interface <port>` | Copy only MAC addresses learned on a specified device port. Wildcards may be used when specifying an interface name. |
| `vlan <vid>` | Copy only MAC addresses learned on a specified VLAN. |
| `group <name>` | Assign a group name to the local RADIUS server users created. |
| `export-vlan` | Export VLAN ID assigned to exported FDB entry. |
| `<radius-group-name>` | Prefix for Radius group name storing VLAN ID |

**Mode** Privileged Exec

**Usage notes** The local RADIUS server users created are written to a specified destination file in local RADIUS user CSV (Comma Separated Values) format. The local RADIUS server users can then be imported to a local RADIUS server using the copy local-radius-user-db (from file) command.

The name and password of the local RADIUS server users created use a MAC address, which can be used for MAC authentication.

This command does not copy a MAC address learned by the CPU or the management port.

This command can filter FDB entries by the interface name and the VLAN ID. When the interface name and the VLAN ID are specified, this command generates local RADIUS server users from only the MAC address learned on the specified interface and on the specified VLAN.

**Examples**

To register the local RADIUS server users from the local FDB directly to the local RADIUS server, use the command:

```
awplus# copy fdb-radius-users local-radius-user-db
```

To register the local RADIUS server users from the interface port1.0.1 to the local RADIUS server, use the command:

```
awplus# copy fdb-radius-users local-radius-user-db interface
port1.0.1
```

To copy output generated as local RADIUS server user data from MAC addresses learned on vlan10 on interface port1.0.1 to the file radius-user.csv, use the command:

```
awplus# copy fdb-radius-users radius-user.csv interface
port1.0.1 vlan10
```

To copy output generated as local RADIUS server user data from MAC addresses learned on vlan10 on interface port1.0.1 to a file on the remote file server, use the command:

```
awplus# copy fdb-radius-users fserver interface port1.0.1
vlan10
```

**Related commands**

copy local-radius-user-db (to file)

copy local-radius-user-db (from file)

# copy local-radius-user-db (from file)

**Overview**

Use this command to copy the Local RADIUS server user data from a file. The file, including the RADIUS user data in the file, must be in the CSV (Comma Separated Values) format.

You can select **add** or **replace** as the copy method. The **add** parameter option copies the contents of specified file to the local RADIUS server user database. If the same user exists then the old user is removed before adding a new user. The **replace** parameter option deletes all contents of the local RADIUS server user database before copying the contents of specified file.

**Syntax**

```
copy <source-url> local-radius-user-db [add|replace]
```

| Parameter | Description |
|---|---|
| *<source-url>* | URL of the source file. |
| add | Add file contents to local RADIUS server user database. |
| replace | Replace current local RADIUS server user database with file contents. |

**Default**

When no copy method is specified with this command the **replace** option is applied.

**Mode**

Privileged Exec

**Examples**

To replace the current local RADIUS server user data to the contents of http://datahost/ user.csv, use the following command:

```
awplus# copy http://datahost/user.csv local-radius-user-db
```

To add the contents of http://datahost/user.csv to the current local RADIUS server user database, use the following command:

```
awplus# copy http://datahost/user.csv local-radius-user-db add
```

**Related commands**

copy fdb-radius-users (to file)

copy local-radius-user-db (to file)

# copy local-radius-user-db (to file)

**Overview** Use this command to copy the local RADIUS server user data to a file. The output file produced is CSV (Comma Separated Values) format.

**Syntax**

```
copy local-radius-user-db
{nvs|flash|card|usb|tftp|scp|<destination-url>}
```

| Parameter | Description |
|---|---|
| `nvs` | Copy to NVS memory. |
| `flash` | Copy to Flash memory. |
| `card` | Copy to SD card. |
| `usb` | Copy to USB storage device. |
| `tftp` | Copy to TFTP destination. |
| `scp` | Copy to SCP destination. |
| `<destination-url>` | URL of the Destination file. |

**Mode** Privileged Exec

**Example** Copy the current local RADIUS server user data to http://datahost/user.csv.

```
awplus# copy local-radius-user-db http://datahost/user.csv
```

**Related commands**

copy fdb-radius-users (to file)

copy local-radius-user-db (from file)

# crypto pki enroll local (deleted)

**Overview** This command is no longer available. Please use the following command instead:

```
crypto pki enroll <trustpoint>
```

Note that "local" is a valid name for a trustpoint, so you do not need to modify existing configurations or scripts.

# crypto pki enroll local local-radius-all-users (deleted)

**Overview** This command is no longer available. Please use the following command instead:

```
crypto pki enroll <trustpoint> local-radius-all-users
```

Note that "local" is a valid name for a trustpoint, so you do not need to modify existing configurations or scripts.

# crypto pki enroll local user (deleted)

**Overview** This command is no longer available. Please use the following command instead:

```
crypto pki enroll <trustpoint> user <username>
```

Note that "local" is a valid name for a trustpoint, so you do not need to modify existing configurations or scripts.

# crypto pki export local pem (deleted)

**Overview** This command is no longer available. Please use the crypto pki export pem command instead:

```
crypto pki export <trustpoint> pem [terminal|<url>]
```

Note that "local" is a valid name for a trustpoint, so you do not need to modify existing configurations or scripts.

# crypto pki export local pkcs12 (deleted)

**Overview** This command is no longer available. Please use the crypto pki export pkcs12 command instead:

```
crypto pki export <trustpoint> pkcs12 {ca|server|<username>}
<url>
```

Note that "local" is a valid name for a trustpoint, so you do not need to modify existing configurations or scripts.

# crypto pki trustpoint local (deleted)

**Overview** This command is no longer available. Please use the following command instead:

```
crypto pki trustpoint <trustpoint>
```

Note that "local" is a valid name for a trustpoint, so you do not need to modify existing configurations or scripts.

# debug crypto pki (deleted)

**Overview** This command is no longer available.

# domain-style

**Overview** Use this command to enable a specified domain style on the local RADIUS server. The local RADIUS server decodes the domain portion of a username login string when this command is enabled.

Use the **no** variant of this command to disable the specified domain style on the local RADIUS server.

**Syntax**

```
domain-style {suffix-atsign|ntdomain}
no domain-style {suffix-atsign|ntdomain}
```

| Parameter | Description |
|---|---|
| `suffix-atsign` | Enable at sign "@" delimited suffix style, i.e. "user@domain". |
| `ntdomain` | Enable NT domain style, i.e. "domain\user". |

**Default** This feature is disabled by default.

**Mode** RADIUS Server Configuration

**Usage notes** When both domain styles are enabled, the first domain style configured has the highest priority. A username login string is matched against the first domain style enabled. Then, if the username login string is not decoded, it is matched against the second domain style enabled.

**Examples** To enable NT domain style on the local RADIUS server, use the commands:

```
awplus# configure terminal
awplus(config)# radius-server local
awplus(config-radsrv)# domain-style ntdomain
```

To disable NT domain style on the local RADIUS server, use the commands:

```
awplus# configure terminal
awplus(config)# radius-server local
awplus(config-radsrv)# no domain-style ntdomain
```

**Related commands** server enable

# egress-vlan-id

**Overview** Use this command to configure the standard RADIUS attribute "Egress-VLANID (56)" for the local RADIUS Server user group.

Use the **no** variant of this command to remove the Egress-VLANID attribute from the local RADIUS server user group.

**Syntax**

```
egress-vlan-id <vid> [tagged|untagged]
no egress-vlan-id
```

| Parameter | Description |
|---|---|
| `<vid>` | The VLAN identifier to be used for the Egress VLANID attribute, in the range 1 to 4094. |
| `tagged` | Set frames on the VLAN as tagged. This sets the tag indication field to indicate that all frames on this VLAN are tagged. |
| `untagged` | Set all frames on the VLAN as untagged. This sets the tag indication field to indicate that all frames on this VLAN are untagged. |

**Default** By default, no Egress-VLANID attributes are configured.

**Mode** RADIUS Server Group Configuration

**Examples** To set the "Egress-VLANID" attribute for the *NormalUsers* local RADIUS server user group to VLAN identifier 200, with tagged frames, use the commands:

```
awplus# configure terminal
awplus(config)# radius-server local
awplus(config-radsrv)# group NormalUsers
awplus(config-radsrv-group)# egress-vlan-id 200 tagged
```

To remove the "Egress-VLANID" attribute for the *NormalUsers* local RADIUS server user group, use the commands:

```
awplus# configure terminal
awplus(config)# radius-server local
awplus(config-radsrv)# group NormalUsers
awplus(config-radsrv-group)# no egress-vlan-id
```

**Related commands** attribute

egress-vlan-name

# egress-vlan-name

**Overview** Use this command to configure the standard RADIUS attribute "Egress-VLAN-Name (58)" for the local RADIUS server user group.

Use the **no** variant of this command to remove the Egress-VLAN-Name attribute from the local RADIUS server user group.

**Syntax**

```
egress-vlan-name <vlan-name> [tagged|untagged]
no egress-vlan-name
```

| Parameter | Description |
|---|---|
| `<vlan-name>` | The VLAN name to be configured as the Egress-VLAN-Name attribute. |
| `tagged` | Set frames on the VLAN as tagged. This sets the tag indication field to indicate that all frames on this VLAN are tagged. |
| `untagged` | Set all frames on the VLAN as untagged. This sets the tag indication field to indicate that all frames on this VLAN are untagged. |

**Default** By default, no Egress-VLAN-Name attributes are configured.

**Mode** RADIUS Server Group Configuration

**Examples** To configure the "Egress-VLAN-Name" attribute for the RADIUS server user group *NormalUsers* with the VLAN name *vlan2* and all frames on this VLAN tagged, use the commands:

```
awplus# configure terminal
awplus(config)# radius-server local
awplus(config-radsrv)# group NormalUsers
awplus(config-radsrv-group)# egress-vlan-name vlan2 tagged
```

To delete the "Egress-VLAN-Name" attribute for the *NormalUsers* group, use the commands:

```
awplus# configure terminal
awplus(config)# radius-server local
awplus(config-radsrv)# group NormalUsers
awplus(config-radsrv-group)# no egress-vlan-name
```

**Related commands** attribute

egress-vlan-id

# group

**Overview** Use this command to create a local RADIUS server user group, and enter local RADIUS Server User Group Configuration mode.

Use the **no** variant of this command to delete the local RADIUS server user group.

**Syntax**

```
group <user-group-name>
no group <user-group-name>
```

| Parameter | Description |
|---|---|
| *<user-group-name>* | User group name string. |

**Mode** RADIUS Server Configuration

**Examples** The following command creates the user group NormalUsers.

```
awplus# configure terminal
awplus(config)# radius-server local
awplus(config-radsrv)# group NormalUsers
```

The following command deletes user group NormalUsers.

```
awplus# configure terminal
awplus(config)# radius-server local
awplus(config-radsrv)# no group NormalUsers
```

**Related commands**

user (RADIUS server)

show radius local-server user

vlan (RADIUS server)

# nas

**Overview** This command adds a client device (the Network Access Server or the NAS) to the list of devices that are able to send authentication requests to the local RADIUS server. The NAS is identified by its IP address and a shared secret (also referred to as a shared key) must be defined that the NAS will use to establish its identity.

Use the **no** variant of this command to remove a NAS client from the list of devices that are allowed to send authentication requests to the local RADIUS server.

**Syntax**

```
nas <ip-address> key <nas-keystring>
no nas <ip-address>
```

| Parameter | Description |
|---|---|
| *<ip-address>* | RADIUS NAS IP address. |
| *<nas-keystring>* | NAS shared keystring. |

**Mode** RADIUS Server Configuration

**Examples** The following commands add the NAS with an IP address of `192.168.1.2` to the list of clients that may send authentication requests to the local RADIUS server. Note the shared key that this NAS will use to establish its identify is `NAS_PASSWORD`.

```
awplus# configure terminal
awplus(config)# radius-server local
awplus(config-radsrv)# nas 192.168.1.2 key NAS_PASSWORD
```

The following commands remove the NAS with an IP address of `192.168.1.2` from the list of clients that are allowed to send authentication requests to the local RADIUS server:

```
awplus# configure terminal
awplus(config)# radius-server local
awplus(config-radsrv)# no nas 192.168.1.2
```

**Related commands** show radius local-server nas

# help radius-attribute

**Overview** Use this command to display a list of standard and vendor specific valid RADIUS attributes that are supported by the local RADIUS server.

**Syntax** `help radius-attribute [<attribute-name>|<attribute-ID>]`

| Parameter | Description |
|---|---|
| *<attribute-name>* | List the details and predefined values for the named attribute. |
| *<attribute-ID>* | List the details and predefined values for the given attribute ID. |

**Mode** Privileged Exec

**Usage notes** When used without a parameter, this command lists all of the available RADIUS attributes.

When used with an attribute name or ID, this command displays the attribute name, value type, and any predefined values.

**Example** To list all available RADIUS attributes, use the following command:

```
awplus# help radius-attribute
```

```
awplus#help radius-attribute
Standard Attributes:
  1     User-Name
  2     User-Password
  3     CHAP-Password
  4     NAS-IP-Address
  5     NAS-Port
  6     Service-Type
...
```

To display the details for the RADIUS attribute Frag-Status, use the following command:

```
awplus# help radius-attribute frag-status
```

```
awplus#help radius-attribute frag-status
Frag-Status : integer (Integer number)

Pre-defined values :
    Fragmentation-Supported (1)
    More-Data-Pending (2)
    More-Data-Request (3)
    Reserved (0)
```

**Related commands**

attribute

**Command changes**

Version 5.4.8-0.2: command added

Version 5.4.9-0.1: added to x530 Series products

# radius-secure-proxy local-server

**Overview** Use this command to enter the RadSecProxy local-server application configuration mode. This application allows remote RadSec clients to communicate with the local RADIUS server process via a secure (TLS) proxy.

**Syntax**

```
radius-secure-proxy local-server
```

**Mode** Global Configuration Mode

**Example** To change mode from User Exec mode to the RadSecProxy local-server configuration mode, use the commands:

```
awplus# configure terminal
awplus(config)# radius-secure-proxy local-server
awplus(config-radsecproxy-srv)#
```

**Related commands**

client (radsecproxy-srv)

client name-check

client trustpoint

# radius-server local

**Overview** Use this command to navigate to the Local RADIUS server configuration mode (`config-radsrv`) from the Global Configuration mode (`config`).

**Syntax**

```
radius-server local
```

**Mode** Global Configuration

**Example** Local RADIUS Server commands are available from `config-radsrv` configuration mode. To change mode from User Exec mode to the Local RADIUS Server mode (config- radsrv), use the commands:

```
awplus# configure terminal
awplus(config)# radius-server local
awplus(config-radsrv)#
```

**Output**

```
awplus(config)#radius-server local
Creating Local CA repository.....OK
Enrolling Local System to local trustpoint..OK
awplus(config-radsrv)#
```

**Related commands**

server enable

show radius local-server group

show radius local-server nas

show radius local-server statistics

show radius local-server user

# server auth-port

**Overview** Use this command to change the UDP port number for local RADIUS server authentication.

Use the **no** variant of this command to reset the RADIUS server authentication port back to the default.

**Syntax**

```
server auth-port <1-65535>
no server auth-port
```

| Parameter | Description |
|---|---|
| *<1-65535>* | UDP port number. |

**Default** The default local RADIUS server UDP authentication port number is 1812.

**Mode** RADIUS Server Configuration

**Examples** The following commands set the RADIUS server authentication port to 10000.

```
awplus# configure terminal
awplus(config)# radius-server local
awplus(config-radsrv)# server auth-port 10000
```

The following commands reset the RADIUS server authentication port back to the default UDP port of 1812.

```
awplus# configure terminal
awplus(config)# radius-server local
awplus(config-radsrv)# no server auth-port
```

**Related commands** server enable

show radius local-server statistics

# server enable

**Overview**

This command enables the local RADIUS server. The local RADIUS server feature is started immediately when this command is issued.

The **no** variant of this command disables local RADIUS server. When this command is issued, the local RADIUS server stops operating.

**Syntax**

```
server enable
no server enable
```

**Default**

The local RADIUS server is disabled by default and must be enabled for use with this command.

**Mode**

RADIUS Server Configuration

**Examples**

To enable the local RADIUS server, use the following commands:

```
awplus# configure terminal
awplus(config)# radius-server local
awplus(config-radsrv)# server enable
```

To disable the local RADIUS server, use the command:

```
awplus# configure terminal
awplus(config)# radius-server local
awplus(config-radsrv)# no server enable
```

**Related commands**

server auth-port

show radius local-server statistics

# show radius local-server group

**Overview** Use this command to display information about the local RADIUS server user group.

For information on filtering and saving command output, see the "Getting Started with AlliedWare Plus" Feature Overview and Configuration Guide.

**Syntax**

```
show radius local-server group [<user-group-name>]
```

| Parameter | Description |
|---|---|
| *<user-group-name>* | User group name string. |

**Mode** User Exec and Privileged Exec

**Example** The following command displays Local RADIUS server user group information.

```
awplus# show radius local-server group
```

**Output**

**Table 1:** Example output from the **show radius local-server group** command

```
Group-Name          Vlan
-------------------------------------------------------------
NetworkOperators    ManagementNet
NormalUsers         CommonNet
```

**Table 2:** Parameters in the output of the **show radius local-server group** command

| Parameter | Description |
|---|---|
| `Group-Name` | Group name. |
| `Vlan` | VLAN name assigned to the group. |

**Related commands** group

# show radius local-server nas

**Overview** Use this command to display information about NAS (Network Access Servers) registered to the local RADIUS server.

For information on filtering and saving command output, see the "Getting Started with AlliedWare Plus" Feature Overview and Configuration Guide.

**Syntax**

```
show radius local-server nas [<ip-address>]
```

| Parameter | Description |
|---|---|
| *<ip-address>* | Specify NAS IP address for show output. |

**Mode** User Exec and Privileged Exec

**Example** The following command displays NAS information.

```
awplus# show radius local-server nas
```

**Output**

**Table 3:** Example output from the **show radius local-server nas** command

```
NAS-Address      Shared-Key
-------------------------------------------------------
127.0.0.1       awplus-local-radius-server
```

**Table 4:** Parameters in the output of the **show radius local-server nas** command

| Parameter | Description |
|---|---|
| NAS-Address | IP address of NAS. |
| Shared-Key | Shared key used for RADIUS connection. |

**Related commands** nas

# show radius local-server statistics

**Overview**

Use this command to display statistics about the local RADIUS server.

For information on filtering and saving command output, see the "Getting Started with AlliedWare Plus" Feature Overview and Configuration Guide.

**Syntax**

```
show radius local-server statistics
```

**Mode**

User Exec and Privileged Exec

**Usage notes**

Both unknown usernames and invalid passwords will display as failed logins in the show output.

**Example**

The following command displays Local RADIUS server statistics.

```
awplus# show radius local-server statistics
```

**Output**

**Table 5:** Example output from the **show radius local-server statistics** command

```
Server status       : Run (administrative status is enable)
Enabled methods     : MAC EAP-MD5 EAP-TLS EAP-PEAP
Available methods   : MAC EAP-MD5 EAP-TLS EAP-PEAP
EAP trustpoints     : local

Successes             :1              Unknown NAS             :0
Failed Logins         :0              Invalid packet from NAS :0
Internal Error        :0              Unknown Error           :0

NAS : 127.0.0.1
Successes             :0              Shared key mismatch     :0
Failed Logins         :0              Unknown RADIUS message  :0
Unknown EAP message   :0              Unknown EAP auth type   :0
Corrupted packet      :0

NAS : 192.168.1.61
Successes             :0              Shared key mismatch     :0
Failed Logins         :0              Unknown RADIUS message  :0
Unknown EAP message   :0              Unknown EAP auth type   :0
Corrupted packet :0

Username  Successes  Failures
Tom               1         0
admin             0         0
```

**Related commands**

clear radius local-server statistics

radius-server local

server enable

server auth-port

# show radius local-server user

**Overview** Use this command to display information about the local RADIUS server user.

For information on filtering and saving command output, see the "Getting Started with AlliedWare Plus" Feature Overview and Configuration Guide.

**Syntax**

```
show radius local-server user [<user-name>]
show radius local-server user [<user-name>] format csv
show radius local-server user [<user-name>] detail
```

| Parameter | Description |
|---|---|
| *<user-name>* | RADIUS user name. If no user name is specified, information for all users is displayed. |
| `format csv` | Format output as CSV. This parameter is only available in Privileged Exec mode. |
| `detail` | Display detailed information about the user. |

**Mode** User Exec and Privileged Exec

**Examples** The following command displays Local RADIUS server user information for user Tom.

```
awplus# show radius local-server user Tom
```

**Table 6:** Example output from the **show radius local-server user** command

```
User-Name            Group               Vlan
-----------------------------------------------------------------
Tom                  NetworkOperators    ManagementNet
```

The following command displays all Local RADIUS server information for all users.

```
awplus# show radius local-server user
```

The following command displays Local RADIUS server user information for Tom in CSV format (only available in Privileged Exec mode).

```
awplus# show radius local-server user Tom format csv
```

**Table 7:** Example output from the **show radius local-server user Tom format csv** command

```
true,"NetworkOperators","Tom","abcd",0,2099/01/01,1,"","","Managem
entNet"false,3600,false,0,"",false,"",false,false,"","","",false,f
alse,false,,false,0,0,"",true
```

The following command displays detailed Local RADIUS server user information for all users.

```
awplus# show radius local-server user detail
```

**Table 8:** Example output from the **show radius local-server user detail** command

```
awplus# show radius local-server user detail
Total users: 1
Maximum users allowed by license: 3
----------------------------------------------------------------
    Username  : Tom
      Group   : NetworkOperators
      Vlan    : VlanName
```

**Table 9:** Parameters in the output from the **show radius local-server user** command

| Parameter | Description |
|---|---|
| `User-Name` | User name. |
| `Group` | Group name assigned to the user. |
| `Vlan` | VLAN name assigned to the user. |

**Related commands**

group

user (RADIUS server)

**Command changes**

Version 5.4.9-0.1: **detail** parameter added

# user (RADIUS server)

**Overview** Use this command to register a user to the local RADIUS server.

Use the **no** variant of this command to delete a user from the local RADIUS server.

**Syntax**

```
user <radius-user-name> [encrypted] password <user-password>
[group <user-group>]
```

```
no user <radius-user-name>
```

| Parameter | Description |
|---|---|
| *<radius-user-name>* | RADIUS user name. This can also be a MAC address in the IEEE standard format of HH-HH-HH-HH-HH-HH if you are configuring MAC authentication to use local RADIUS server. |
| encrypted | Specifies that the password is being entered in its encrypted form, so that it is not further encrypted.<br>When creating a new user, enter the password in plaintext, and do not use the **encrypted** parameter.<br>Use the **encrypted** parameter only when referring to a user that has previously been created. For instance, when adding an existing user from another RADIUS server, use the **encrypted** parameter, and enter the encrypted version of the password that appears in the output of **show** commands for the user. |
| *<user-password>* | User password. This can also be a MAC address in the IEEE standard format of HH-HH-HH-HH-HH-HH if you are configuring MAC authentication to use local RADIUS server. |
| group | Specify the group for the user. |
| *<user-group>* | User group name. |

**Mode** RADIUS Server Configuration

**Usage notes** RADIUS user names cannot contain question mark (?), space ( ), or quote (" ") characters. RADIUS user names containing the below characters cannot use certificate authentication:

```
/ \ '$ &()*;< > '|
```

Certificates cannot be created and exported for RADIUS user names that contain the above characters. We advise you to avoid using these characters in RADIUS user names if you need to use certificate authentication, because you will not be able to create and export certificates.

You also can use the IEEE standard format hexadecimal notation (HH-HH-HH-HH-HH-HH) to specify a supplicant MAC address to configure the user name and user password parameters to use local RADIUS server for MAC Authentication. See the AAA and Port_Authentication Feature Overview and Configuration_Guide for a sample MAC configuration. See also the command **user**

**00-db-59-ab-70-37 password 00-db-59-ab-70-37** as shown in the command examples.

## Examples

The following commands add user "Tom" to the local RADIUS server and sets his password to "QwerSD".

```
awplus# configure terminal
awplus(config)# radius-server local
awplus(config-radsrv)# user Tom password QwerSD
```

The following commands add user "Tom" to the local RADIUS server user group "NormalUsers" and sets his password "QwerSD".

```
awplus# configure terminal
awplus(config)# radius-server local
awplus(config-radsrv)# user Tom password QwerSD group
NormalUsers
```

The following commands remove user "Tom" from the local RADIUS server:

```
awplus# configure terminal
awplus(config)# radius-server local
awplus(config-radsrv)# no user Tom
```

The following commands add the supplicant MAC address 00-d0-59-ab-70-37 to the local RADIUS server:

```
awplus# configure terminal
awplus(config)# radius-server local
awplus(config-radsrv)# user 00-db-59-ab-70-37 password
00-db-59-ab-70-37
```

The following commands remove the supplicant MAC address 00-d0-59-ab-70-37 from the local RADIUS server:

```
awplus# configure terminal
awplus(config)# radius-server local
awplus(config-radsrv)# no user 00-db-59-ab-70-37
```

## Related commands

group

show radius local-server user

# vlan (RADIUS server)

**Overview**

Use this command to set the VLAN ID or name for the local RADIUS server user group. The VLAN information is used for authentication with the dynamic VLAN feature.

Use the **no** variant of this command to clear the VLAN ID or VLAN name for the local RADIUS server user group.

**Syntax**

```
vlan {<vid>|<vlan-name>}
no vlan
```

| Parameter | Description |
|---|---|
| *<vid>* | VLAN ID. |
| *<vlan-name>* | VLAN name. |

**Default**

VLAN information is not set by default.

**Mode**

RADIUS Server Group Configuration

**Examples**

The following commands set VLAN ID 200 to the group named *NormalUsers*:

```
awplus# configure terminal
awplus(config)# radius-server local
awplus(config-radsrv)# group NormalUsers
awplus(config-radsrv-group)# vlan 200
```

The following commands remove VLAN ID 200 from the group named *NormalUsers*:

```
awplus# configure terminal
awplus(config)# radius-server local
awplus(config-radsrv)# group NormalUsers
awplus(config-radsrv-group)# no vlan
```

**Related commands**

group

show radius local-server user

# 47 Public Key Infrastructure and Crypto Commands

## Introduction

**Overview** This chapter provides an alphabetical reference of commands used to configure the Public Key Infrastructure (PKI) capabilities on an AlliedWare Plus device. For more information about PKI, see the Public Key Infrastructure (PKI) Feature Overview and Configuration Guide.

**Command List**


- "crypto key generate rsa" on page 2297
- "crypto key zeroize" on page 2298
- "crypto pki authenticate" on page 2299
- "crypto pki enroll" on page 2300
- "crypto pki enroll user" on page 2301
- "crypto pki export pem" on page 2303
- "crypto pki export pkcs12" on page 2304
- "crypto pki import pem" on page 2306
- "crypto pki import pkcs12" on page 2308
- "crypto pki trustpoint" on page 2309
- "enrollment (ca-trustpoint)" on page 2310
- "fingerprint (ca-trustpoint)" on page 2311
- "no crypto pki certificate" on page 2313
- "rsakeypair (ca-trustpoint)" on page 2314
- "show crypto key mypubkey rsa" on page 2315
- "show crypto pki certificates" on page 2316
- "show crypto pki enrollment user" on page 2318
- "show crypto pki trustpoint" on page 2319
- "subject-name (ca-trustpoint)" on page 2320

# crypto key generate rsa

**Overview** Use this command to generate a cryptographic public/private key pair for the Rivest-Shamir-Adleman (RSA) encryption algorithm.

**Syntax**

```
crypto key generate rsa [label <keylabel>] [<1024-4096>]
```

| Parameter | Description |
|---|---|
| *<keylabel>* | The name of the key to be created. The name must start with an alphanumeric character, and may only contain alphanumeric characters, underscores, dashes, or periods. The maximum length of the name is 63 characters. If no label is specified the default value “server-default” is used. |
| *<1024-4096>* | The bit length for the key. If no bit length is specified the default of 2048 is used. |

**Mode** Privileged Exec

**Usage notes** The generated key may be used for multiple server certificates in the system. A key is referenced by its label. A bit length between 1024 and 4096 bits may be specified. Larger bit lengths are more secure, but require more computation time.

The specified key must not already exist.

**Example** To create a key with the label "example-server-key" and a bit length of 2048, use the commands:

```
awplus> enable
awplus# crypto key generate rsa label example-server-key 2048
```

**Related commands**

crypto key zeroize

rsakeypair (ca-trustpoint)

show crypto key mypubkey rsa

# crypto key zeroize

**Overview** Use this command to delete one or all cryptographic public/private key pairs.

**Syntax**

```
crypto key zeroize rsa <keylabel>
crypto key zeroize all
```

| Parameter | Description |
|---|---|
| `rsa <keylabel>` | Delete a single key pair for the Rivest-Shamir-Adleman (RSA) encryption algorithm. |
| `all` | Delete all keys. |

**Mode** Privileged Exec

**Usage notes** Note that this command has the same effect as using the **delete** command (it deletes the file from Flash memory but does not overwrite it with zeros).

The specified key must exist but must not be in use for any existing server certificates.

A key may not be deleted if it is associated with the server certificate or server certificate signing request for an existing trustpoint. To remove a server certificate so that the key may be deleted, use the **no crypto pki enroll** command to de-enroll the server.

**Example** To delete an RSA key named "example-server-key", use the following command:

```
awplus# crypto key zeroize rsa example-server-key
```

**Related commands**

crypto key generate rsa

show crypto key mypubkey rsa

**Command changes**

Version 5.4.6-1.1: zeroize functionality added to x930 Series

Version 5.4.8-1.2: zeroize functionality added to x220, XS900MX, x550 Series

Version 5.4.8-2.1: zeroize functionality added to SBx908 GEN2, x950 Series

# crypto pki authenticate

**Overview** Use this command to authenticate a trustpoint by generating or importing the root CA certificate. This must be done before the server can be enrolled to the trustpoint.

**Syntax**

```
crypto pki authenticate <trustpoint>
```

| Parameter | Description |
|---|---|
| *<trustpoint>* | The name of the trustpoint to be authenticated. |

**Mode** Privileged Exec

**Usage notes** If the trustpoint's **enrollment** setting is "selfsigned", then this command causes a private key to be generated for the root CA, and a self-signed certificate to be generated based on that key.

If the trustpoint's **enrollment** setting is "terminal", then this command prompts the user to paste a certificate Privacy Enhanced Mail (PEM) file at the CLI terminal. If the certificate is a valid selfsigned CA certificate, then it will be stored as the trustpoint's root CA certificate.

The specified trustpoint must already exist, and its enrollment mode must have been defined.

**Example** To show the **enrollment** setting of a trustpoint named "example" and then generate a certificate from it, use the commands:

```
awplus> enable
awplus# configure terminal
awplus(config)# crypto pki trustpoint example
awplus(ca-trustpoint)# enrollment selfsigned
awplus(config)# exit
awplus# exit
awplus# crypto pki authenticate example
```

**Related commands**

crypto pki import pem

crypto pki trustpoint

enrollment (ca-trustpoint)

# crypto pki enroll

**Overview**

Use this command to enroll the local server to the specified trustpoint.

Use the **no** variant of this command to de-enroll the server by removing its certificate

**Syntax**

```
crypto pki enroll <trustpoint>
no crypto pki enroll <trustpoint>
```

| Parameter | Description |
|---|---|
| *<trustpoint>* | The name of the trustpoint to be enrolled |

**Mode**

Privileged Exec

**Usage notes**

For the local server, "enrollment" is the process of creating of a certificate for the server that has been signed by a CA associated with the trustpoint. The public portion of the RSA key pair specified using the rsakeypair parameter for the trustpoint will be included in the server certificate.

If the trustpoint represents a locally self-signed certificate authority, then this command results in the direct generation of the server certificate, signed by the root CA for the trustpoint.

If the trustpoint represents an external certificate authority, then this command results in the generation of a Certificate Signing Request (CSR) file, which is displayed at the terminal in Privacy-Enhanced Mail (PEM) format, suitable for copying and pasting into a file or message. The CSR must be sent to the external CA for processing. When the CA replies with the signed certificate, that certificate should be imported using the crypto pki import pem command, to complete the enrollment process.

The specified trustpoint must already exist, and it must already be authenticated.

**Example**

To enroll the local server with the trustpoint "example", use the following commands:

```
awplus> enable
awplus# crypto pki enroll example
```

**Related commands**

crypto pki enroll user

crypto pki import pem

crypto pki trustpoint

enrollment (ca-trustpoint)

# crypto pki enroll user

**Overview**

Use this command to enroll a single RADIUS user or all RADIUS users to the specified trustpoint.

Use the **no** variant of this command to remove the PKCS#12 file from the system. Note that the PKCS#12 files are generated in a temporary (volatile) file system, so a system restart also results in removal of all of the files.

**Syntax**

```
crypto pki enroll <trustpoint>
{user <username>|local-radius-all-users}
```

```
no crypto pki enroll <trustpoint>
{user <username>|local-radius-all-users}
```

| Parameter | Description |
|---|---|
| *<trustpoint>* | The name of the trustpoint to which users are to be enrolled. |
| *<username>* | The name of the user to enroll to the trustpoint. |

**Mode**

Privileged Exec

**Usage notes**

For RADIUS users, “enrollment” is the process of generating a private key and a corresponding client certificate for each user, with the certificate signed by the root CA for the trustpoint. The resulting certificates may be exported to client devices, for use with PEAP or EAP-TLS authentication with the local RADIUS server.

The specified trustpoint must represent a locally self-signed certificate authority.

The private key and certificate are packaged into a PKCS#12-formatted file, suitable for export using the **crypto pki export pkcs12** command. The private key is encrypted for security, with a passphrase that is entered at the command line. The passphrase is required when the PKCS#12 file is imported on the client system. The passphrase is not stored anywhere on the device, so users are responsible for remembering it until the export-import process is complete.

If **local-radius-all-users** is specified instead of an individual user, then keys and certificates for all RADIUS users will be generated at once. All the keys will be encrypted using the same passphrase.

The specified trustpoint must already exist, it must represent a locally self-signed CA, and it must already have been authenticated.

**Example**

To enroll the user “example-user” with the trustpoint “example”, use the following commands:

```
awplus> enable
awplus# crypto pki enroll example user example-user
```

To enroll all local RADIUS users with the trustpoint "example", use the following commands:

```
awplus> enable
awplus# crypto pki enroll example local-radius-all-users
```

**Related commands**

crypto pki export pkcs12

crypto pki trustpoint

# crypto pki export pem

**Overview** Use this command to export the root CA certificate for the given trustpoint to a file in Privacy-Enhanced Mail (PEM) format. The file may be transferred to the specified destination URL, or displayed at the terminal.

**Syntax**

```
crypto pki export <trustpoint> pem [terminal|<url>]
```

| Parameter | Description |
|---|---|
| `<trustpoint>` | The name of the trustpoint for which the root CA certificate is tobe exported. |
| `terminal` | Display the PEM file to the terminal. |
| `<url>` | Transfer the PEM file to the specified URL. |

**Default** The PEM will be displayed to the terminal by default.

**Mode** Privileged Exec

**Usage notes** The specified trustpoint must already exist, and it must already be authenticated.

**Example** To display the PEM file for the trustpoint “example” to the terminal, use the following commands:

```
awplus> enable
awplus# crypto pki export example pem terminal
```

To export the PEM file “example.pem” for the trustpoint “example” to the URL “tftp://server_a/”, use the following commands:

```
awplus> enable
awplus# crypto pki export example pem
tftp://server_a/example.pem
```

**Related commands**

crypto pki authenticate

crypto pki import pem

crypto pki trustpoint

# crypto pki export pkcs12

**Overview** Use this command to export a certificate and private key for an entity in a trustpoint to a file in PKCS#12 format at the specified URL. The private key is encrypted with a passphrase for security.

**Syntax**

```
crypto pki export <trustpoint> pkcs12 {ca|server|<username>}
<url>
```

| Parameter | Description |
|---|---|
| `<trustpoint>` | The name of the trustpoint for which the certificate and key are tobe exported. |
| `ca` | If this option is specified, the command exports the root CA certificate and corresponding key. |
| `server` | If this option is specified, the command exports the server certificate and corresponding key. |
| `<username>` | If a RADIUS username is specified, the command exports the PKCS#12 file that was previously generated using the crypto pki enroll user command. To avoid ambiguity with keywords, the username may be prefixed by the string “user:”. |
| `<url>` | The destination URL for the PKCS#12 file. The format of the URLis the same as any valid destination for a file copy command. |

**Mode** Privileged Exec

**Usage notes** If the **ca** option is specified, this command exports the root CA certificate and the corresponding private key, if the trustpoint has been authenticated as a locally selfsigned CA. (If the trustpoint represents an external CA, then there is no private key on the system corresponding to the root CA certificate. Use the **crypto pki export pem** file to export the certificate by itself.) The command prompts for a passphrase to encrypt the private key.

If the **server** option is specified, this command exports the server certificate and the corresponding private key, if the server has been enrolled to the trustpoint. The command prompts for a passphrase to encrypt the private key.

If a RADIUS username is specified, this command exports the PKCS#12 file that was generated using the **crypto pki enroll user** command. (The key within the file was already encrypted as part of the user enrollment process.)

In the event that there is a RADIUS user named “ca” or “server”, enter “user:ca” or “user:server” as the username.

The key and certificate must already exist.

**Example**

To export the PKCS#12 file "example.pk12" for the trustpoint "example" to the URL "tftp://backup/", use the following commands:

```
awplus> enable
awplus# crypto pki export example pkcs12 ca
tftp://backup/example.pk12
```

**Related commands**

crypto pki enroll user

crypto pki export pem

crypto pki import pkcs12

# crypto pki import pem

**Overview** This command imports a certificate for the given trustpoint from a file in Privacy-Enhanced Mail (PEM) format. The file may be transferred from the specified destination URL, or entered at the terminal.

**Syntax**

```
crypto pki import <trustpoint> pem [terminal|<url>]
```

| Parameter | Description |
|---|---|
| `<trustpoint>` | The name of the trustpoint for which the root CA certificate is to be imported. |
| `terminal` | Optional parameter, If specified, the command prompts the user to enter (or paste) the PEM file at the terminal. If parameter is specified terminal is assumed by default. |
| `<url>` | Optional parameter, If specified, the PEM file is transferred from the specified URL |

**Default** The PEM will be imported from the terminal by default.

**Mode** Privileged Exec

**Usage notes** The command is generally used for trustpoints representing external certificate authorities. It accepts root CA certificates, intermediate CA certificates, and server certificates. The system automatically detects the certificate type upon import.

Using this command to import root CA certificates at the terminal is identical to the functionality provided by the crypto pki authenticate command, for external certificate authorities. The imported certificate is validated to ensure it is a proper CA certificate.

Intermediate CA certificates are validated to ensure they are proper CA certificates, and that the issuer chain ends in a root CA certificate already installed for the trustpoint. If there is no root CA certificate for the trustpoint (i.e., if the trustpoint is unauthenticated) then intermediate CA certificates may not be imported.

Server certificates are validated to ensure that the issuer chain ends in a root CA certificate already installed for the trustpoint. If there is no root CA certificate for the trustpoint (i.e., if the trustpoint is unauthenticated) then server certificates may not be imported.

The specified trustpoint must already exist. If the imported certificate is self-signed, then no certificates may exist for the trustpoint. Otherwise, the issuer's certificate must already be present for the trustpoint.

**Example** To import the PEM file for the trustpoint "example" from the terminal, use the following commands:

```
awplus> enable
awplus# crypto pki import example pem
```

To import the PEM file for the trustpoint "example" from the URL "tftp://server_a/", use the following commands:

```
awplus> enable
awplus# crypto pki import example pem
tftp://server_a/example.pem
```

**Related commands**

crypto pki authenticate

crypto pki export pem

crypto pki trustpoint

# crypto pki import pkcs12

**Overview** This command imports a certificate and private key for an entity in a trustpoint from a file in PKCS#12 format at the specified URL. The command prompts for a passphrase to decrypt the private key within the file.

**Syntax**

```
crypto pki import <trustpoint> pkcs12 {ca|server} <url>
```

| Parameter | Description |
|---|---|
| `<trustpoint>` | The name of the trustpoint for which the certificate and key are to be imported. |
| `ca` | If this option is specified, the command imports the root CA certificate and corresponding key. |
| `server` | If this option is specified, the command imports the server certificate and corresponding key. |
| `<url>` | The source URL for the PKCS#12 file. The format of the URLis the same as any valid destination for a file copy command. |

**Mode** Privileged Exec

**Usage notes** If the **ca** option is specified, this command imports the root CA certificate and the corresponding private key. This is only valid if the root CA certificate does not already exist for the trustpoint (i.e., if the trustpoint is unauthenticated).

If the **server** option is specified, this command imports the server certificate and the corresponding private key. The imported private key is given a new unique label of the form “localN”, where N is a non-negative integer. This operation is only valid if the server certificate does not already exist for the trustpoint (i.e., if the server is not enrolled to the trustpoint).

PKCS#12 files for RADIUS users may not be imported with this command. (There is no value in doing so, as the files are not needed on the local system.)

The specified trustpoint must already exist. The key and certificate must not already exist.

**Example** To import the PKCS#12 file “example.pk12” for the trustpoint “example” to the URL “tftp://backup/”, use the following commands:

```
awplus> enable
awplus# crypto pki import example pkcs12 ca
tftp://backup/example.pk12
```

**Related commands**

crypto pki export pkcs12

crypto pki import pem

# crypto pki trustpoint

**Overview**

Use this command to declare the named trustpoint and enter trustpoint configuration mode.

Use the **no** variant of this command to destroy the trustpoint.

**Syntax**

```
crypto pki trustpoint <trustpoint>
no crypto pki trustpoint <trustpoint>
```

| Parameter | Description |
|---|---|
| *<trustpoint>* | The name of the trustpoint. The name must start with an alphanumeric character, and may only contain alphanumeric characters, underscores, dashes, or periods. The maximum length of the name is 63 characters. |

**Mode**

Global Configuration

**Usage notes**

If the trustpoint did not previously exist, it is created as a new trustpoint. The trustpoint will be empty (unauthenticated) unless the name “local” is selected, in which case the system will automatically authenticate the trustpoint as a local self-signed certificate authority.

The **no** variant of this command destroys the trustpoint by removing all CA and server certificates associated with the trustpoint, as well as the private key associated with the root certificate (if the root certificate was locally self-signed). This is a destructive and irreversible operation, so this command should be used with caution.

**Example**

To configure a trustpoint named “example”, use the following commands:

```
awplus> enable
awplus# configure terminal
awplus(config)# crypto pki trustpoint example
```

**Related commands**

show crypto pki certificates

show crypto pki trustpoint

**Command changes**

Version 5.4.6-1.1: command added to x930 Series

Version 5.4.8-1: command added to x220, XS900MX, x550 Series

Version 5.4.8-2.1: command added to SBx908 GEN2, x950 Series

# enrollment (ca-trustpoint)

**Overview** Use this command to declare how certificates will be added to the system for the current trustpoint.

**Syntax**

```
enrollment {selfsigned|terminal}
```

| Parameter | Description |
|---|---|
| `selfsigned` | Sets the enrollment mode for the current trustpoint to selfsigned. |
| `terminal` | Sets the enrollment mode for the current trustpoint to terminal. |

**Mode** Trustpoint Configuration

**Usage notes** If the enrollment is set to **selfsigned**, then the system will generate a root CA certificate and its associated key when the **crypto pki authenticate** command is issued. It will generate a server certificate (signed by the root CA certificate) when the **crypto pki enroll** command is issued.

If the enrollment is set to **terminal**, then the system will prompt the user to paste the root CA certificate Privacy Enhanced Mail (PEM) file at the terminal, when the **crypto pki authenticate** command is issued. It will create a Certificate Signing Request (CSR) file for the local server when the **crypto pki enroll** command is issued. The server certificate received from the external CA should be imported using the **crypto pki import pem** command.

The trustpoint named “local” may only use the **selfsigned** enrollment setting.

If no enrollment mode is specified, the **crypto pki authenticate** command will fail for the trustpoint.

**Example** To configure the trustpoint named "example" and set its enrollment to **selfsigned**, use the following commands:

```
awplus> enable
awplus# configure terminal
awplus(config)# crypto pki trustpoint example
awplus(ca-trustpoint)# enrollment selfsigned
```

**Related commands** crypto pki enroll

# fingerprint (ca-trustpoint)

**Overview**

Use this command to declare that certificates with the specified fingerprint should be automatically accepted, when importing certificates from an external certificate authority. This can affect the behavior of the **crypto pki authenticate** and **crypto pki import pem** commands.

Use the **no** variant of this command to remove the specified fingerprint from the pre-accepted list.

**Syntax**

```
fingerprint <word>
no fingerprint <word>
```

| Parameter | Description |
|---|---|
| *<word>* | The fingerprint as a series of 40 hexadecimal characters, optionally separated into multiple character strings. |

**Default**

By default, no fingerprints are pre-accepted for the trustpoint.

**Mode**

Trustpoint Configuration

**Usage notes**

Specifying a fingerprint adds it to a list of pre-accepted fingerprints for the trustpoint. When a certificate is imported, if it matches any of the pre-accepted values, then it will be saved in the system automatically. If the imported certificate's fingerprint does not match any pre-accepted value, then the user will be prompted to verify the certificate contents and fingerprint visually.

This command is useful when certificates from an external certificate authority are being transmitted over an insecure channel. If the certificate fingerprint is delivered via a separate messaging channel, then pre-entering the fingerprint value via cut-and-paste may be less errorprone than attempting to verify the fingerprint value visually.

The fingerprint is a series of 40 hexadecimal characters. It may be entered as a continuous string, or as a series of up to multiple strings separated by spaces. The input format is flexible because different certificate authorities may provide the fingerprint string in different formats.

**Example**

To configure a fingerprint "5A81D34C 759CC4DA CFCA9F65 0303AD83 410B03AF" for the trustpoint named "example", use the following commands:

```
awplus> enable
awplus# configure terminal
awplus(config)# crypto pki trustpoint example
awplus(ca-trustpoint)# fingerprint 5A81D34C 759CC4DA CFCA9F65
0303AD83 410B03AF
```

**Related commands**

crypto pki authenticate

## crypto pki import pem

# no crypto pki certificate

**Overview** Use this command to delete a certificate with the specified fingerprint from the specified trustpoint.

**Syntax**

```
no crypto pki certificate <trustpoint> <word>
```

| Parameter | Description |
|---|---|
| *<trustpoint>* | The name of the trustpoint. |
| *<word>* | The fingerprint as a series of 40 hexadecimal characters, optionally separated into multiple character strings. |

**Default** By default, no fingerprints are pre-accepted for the trustpoint.

**Mode** Privileged Exec

**Usage notes** The fingerprint can be found in the output of the **show crypto pki certificates** command. If there are dependent certificates in the trustpoint (i.e., if other certificates were signed by the specified certificate), the command will be rejected.

If the specified certificate is the root CA certificate and the trustpoint represents a locally selfsigned CA, then the corresponding private key is also deleted from the system. Deleting the root CA certificate effectively resets the trustpoint to an unauthenticated state.

**Example** To delete a certificate with the fingerprint "594EDEF9 C7C4308C 36D408E0 77E784F0 A59E8792" from the trustpoint “example”, use the following commands:

```
awplus> enable
awplus# no crypto pki certificate example
594EDEF9 C7C4308C 36D408E0 77E784F0 A59E8792
```

**Related commands** no crypto pki trustpoint

show crypto pki certificates

# rsakeypair (ca-trustpoint)

**Overview**

Use this command to declare which RSA key pair should be used to enroll the local server with the trustpoint. Note that this defines the key pair used with the server certificate, not the key pair used with the root CA certificate.

Use the **no** variant of this command to restore the default value, “server-default”.

**Syntax**

```
rsakeypair <keylabel> [<1024-4096>]
no rsakeypair
```

| Parameter | Description |
|---|---|
| *<keylabel>* | The key to be used with the server certificate for this trustpoint. The name must start with an alphanumeric character, and may only contain alphanumeric characters, underscores, dashes, or periods. The maximum length of the name is 63 characters. |
| *<1024-4096>* | The bit length for the key, to be used if the key is implicitly generated during server enrollment. |

**Default**

The default value for **keylabel** is “server-default”.

The default value for the key bit length is 2048.

**Mode**

Trustpoint Configuration

**Usage notes**

If the label specified does not refer to an existing key created by the **crypto key generate rsa** command, the key will be implicitly generated when the **crypto pki enroll** command is issued to generate the server certificate or the server certificate signing request. The optional numeric parameter defines the bit length for the key, and is only applicable for keys that are implicitly created during enrollment.

This command does not affect server certificates or server certificate signing requests that have already been generated. The trustpoint’s server certificate is set to use whatever key pair was specified for the trustpoint at the time the **crypto pki enroll** command is issued.

The default key pair is “server-default”. The default bit length is 2048 bits.

**Example**

To configure trustpoint "example" to use the key pair "example-server-key" with a bit length of 2048, use the following commands:

```
awplus> enable
awplus# configure terminal
awplus(config)# crypto pki trustpoint example
awplus(ca-trustpoint)# rsakeypair example-server-key 2048
```

**Related commands**

crypto key generate rsa

# show crypto key mypubkey rsa

**Overview** Use this command to display information about the specified Rivest-Shamir-Adleman encryption key.

**Syntax**

```
show crypto key mypubkey rsa [<keylabel>]
```

| Parameter | Description |
|---|---|
| *<keylabel>* | The name of the key to be shown, if specified. |

**Default** By default, all keys will be shown.

**Mode** Privileged Exec

**Usage notes** If no key label is specified, information about all keys is shown. The command displays the bit length of the key, a key fingerprint (a hash of the key contents to help uniquely identify a key), and a list of trustpoints in which the server certificate is using the key.

The specified keys must exist.

**Example** To show all keys, use the following commands:

```
awplus> enable
awplus# show crypto key mypubkey rsa
```

**Output** Figure 47-1: Example output from **show crypto key mypubkey rsa**

```
awplus#show crypto key mypubkey rsa
--------------------
RSA Key Pair "example-server-key":
   Key size    : 2048 bits
   Fingerprint : 1A605D73 C2274CB7 853886B3 1C802FC6 7CDE45FB
   Trustpoints : example
--------------------
RSA Key Pair "server-default":
   Key size    : 2048 bits
   Fingerprint : 34AC4D2D 5249A168 29D426A3 434FFC59 C4A19901
   Trustpoints : local
```

**Related commands** crypto key generate rsa

# show crypto pki certificates

**Overview** Use this command to display information about existing certificates for the specified trustpoint.

**Syntax**

```
show crypto pki certificates [<trustpoint>]
```

| Parameter | Description |
|---|---|
| `<trustpoint>` | The trustpoint for which the certificates are to be shown. |

**Default** By default, the certificates for all trustpoints are shown.

**Mode** Privileged Exec

**Usage notes** If no trustpoint is specified, certificates for all trustpoints are shown. The command displays the certificates organized into certificate chains. It starts with the server certificate and then displays its issuer, and continues up the issuer chain until the root CA certificate is reached.

For each certificate, the command displays the certificate type, the subject's distinguished name (the entity identified by the certificate), the issuer's distinguished name (the entity that signed the certificate), the validity dates for the certificate, and the fingerprint of the certificate. The fingerprint is a cryptographic hash of the certificate contents that uniquely identifies the certificate.

The specified trustpoints must already exist.

**Example** To show the certificates for the trustpoint "example", use the following command:

```
awplus> enable
awplus# show crypto pki certificates example
```

**Output** Figure 47-2: Example output from **show crypto pki certificates**

```
awplus>enable
awplus#show crypto pki certificates example
--------------------
Trustpoint "example" Certificate Chain
--------------------
Server certificate
   Subject     : /O=local/CN=local.loc.lc
   Issuer      : /C=NZ/CN=local_Signing_CA
   Valid From  : Nov 11 15:35:21 2015 GMT
   Valid To    : Aug 31 15:35:21 2018 GMT
   Fingerprint : 5A81D34C 759CC4DA CFCA9F65 0303AD83 410B03AF
Intermediate CA certificate
   Subject     : /C=NZ/CN=example_Signing_CA
   Issuer      : /C=NZ/CN=example_Root_CA
   Valid From  : Sep 3 18:45:01 2015 GMT
   Valid To    : Oct 10 18:45:01 2020 GMT
   Fingerprint : AE2D5850 9867D258 ABBEE95E 2E0E3D81 60714920
Imported root certificate
   Subject     : /C=NZ/CN=example_Root_CA
   Issuer      : /C=NZ/CN=example_Root_CA
   Valid From  : Jul 23 18:12:10 2015 GMT
   Valid To    : May 12 18:12:10 2025 GMT
   Fingerprint : 594EDEF9 C7C4308C 36D408E0 77E784F0 A59E8792
```

**Related commands** crypto pki trustpoint

# show crypto pki enrollment user

**Overview** Use this command to display a list of trustpoints for which RADIUS user enrollments have been performed, using the **crypto pki enroll user** command. This indicates that PKCS#12 files for the user are available for export for the given trustpoints, using the **crypto pki export pkcs12** command.

**Syntax**

```
crypto pki enrollment user <username>
```

| Parameter | Description |
|---|---|
| *<username>* | The user for which enrollments are to be shown. |

**Mode** Privileged Exec

**Example** To show the list of trustpoints to which user "exampleuser1" is enrolled, use the following commands:

```
awplus> enable
awplus(config)# show crypto pki enrollment user exampleuser1
```

**Output** Figure 47-3: Example output from **show crypto pki enrollment user**

```
awplus> enable
awplus# show crypto pki enrollment user exampleuser1
User "exampleuser1" is enrolled to the following trustpoints:
local,example
```

**Related commands**

crypto pki enroll user

crypto pki export pkcs12

# show crypto pki trustpoint

**Overview** Use this command to display information about the specified trustpoint.

**Syntax**

```
show crypto pki trustpoint [<trustpoint>]
```

| Parameter | Description |
|---|---|
| *<trustpoint>* | The name of the trustpoint to be shown |

**Default** By default, all trustpoints are shown.

**Mode** Privileged Exec

**Usage notes** If no trustpoint is specified, information about all trustpoints is shown. The command displays the authentication status of the trustpoint, the fingerprint of the root CA certificate (if it exists), the enrollment status of the local server with the trustpoint, a list of any applications that are configured to use the trustpoint, and the trustpoint parameters that were configured from trustpoint-configuration mode.

The specified trustpoints must already exist.

**Example** To show the details of the trustpoint “example”, use the following commands:

```
awplus> enable
awplus# show crypto pki trustpoint example
```

**Output** Figure 47-4: Example output from **show crypto pki trustpoint**

```
awplus> enable
awplus# show crypto pki trustpoint example
--------------------
Trustpoint "example"
   Type            : Self-signed certificate authority
   Root Certificate: 50C1856B EEC7555A 0F3A61F6 690D9463 67DF74D1
   Local Server    : The server is enrolled to this trustpoint.
   Server Key      : example-server-key
   Applications    : RADIUS

Authentication and Enrollment Parameters:
   Enrollment      : selfsigned
   RSA Key Pair    : example-server-key (2048 bits)
--------------------
```

**Related commands** crypto pki trustpoint

show crypto pki certificates

# subject-name (ca-trustpoint)

**Overview** Use this command to specify the distinguished name string that should be used for the subject field in the server certificate, when enrolling the server (generating the server certificate or server certificate signing request).

**Syntax**

```
subject-name <word>
```

| Parameter | Description |
|---|---|
| *<word>* | Specify the subject name as a distinguished name string. Complex strings (e.g., strings containing spaces) should be surrounded with double-quote characters. |

**Default** If no subject name is specified for the trustpoint, then the system automatically builds a name of the form "/O=AlliedWare Plus/CN=xxxx.yyyy.zzz", where "xxxx" is the hostname of the system and "yyyy.zzz" is the default search domain for the system.

**Mode** Trustpoint Configuration

**Usage notes** The subject name is specified as a variable number of fields, where each field begins with a forward-slash character ("/"). Each field is of the form "XX=value", where "XX" is the abbreviation of the node type in the tree.

Common values include:

- "C" (country),
- "ST" (state),
- "L" (locality),
- "O" (organization),
- "OU" (organizational unit), and
- "CN" (common name).

Of these fields, "CN" is usually the most important.

***NOTE:*** *For a server certificate, many applications require that the network name of the server matches the common name in the server's certificate.*

**Example** To configure the trustpoint named "example" and set its subject name, use the following commands:

```
awplus> enable
awplus# configure terminal
awplus(config)# crypto pki trustpoint example
awplus(ca-trustpoint)# subject-name "/O=My
Company/CN=192.168.1.1
```

**Related commands** crypto pki enroll

# 48 TACACS+ Commands

## Introduction

**Overview** This chapter provides an alphabetical reference for commands used to configure the device to use TACACS+ servers. For more information about TACACS+, see the TACACS+ Feature Overview and Configuration Guide.

**Command List**


- "aaa authorization commands" on page 2323
- "aaa authorization config-commands" on page 2325
- "authorization commands" on page 2326
- "ip tacacs source-interface" on page 2328
- "show tacacs+" on page 2329
- "tacacs-server host" on page 2331
- "tacacs-server key" on page 2333
- "tacacs-server timeout" on page 2334

# aaa authorization commands

**Overview** This command configures a method list for commands authorization that can be applied to console or VTY lines. When command authorization is enabled for a privilege level, only authorized users can executed commands in that privilege level.

Use the **no** variant of this command to remove a named method list or disable the default method list for a privilege level.

**Syntax**

```
aaa authorization commands <privilege-level>
{default|<list-name>} group tacacs+ [none]
```

```
no aaa authorization commands <privilege-level>
{default|<list-name>}
```

| Parameter | Description |
|---|---|
| `<privilege-level>` | The privilege level of the set of commands the method list will be applied to.<br>AlliedWare Plus defines three sets of commands, that are indexed by a level value:<br>**Level = 1**: All commands that can be accessed by a user with privilege level between 1 and 6 inclusive<br>**Level = 7:** All commands that can be accessed by a user with privilege level between 7 and 14 inclusive<br>**Level = 15**: All commands that can be accessed by a user with privilege level 15 |
| `group` | Specify the server group where authorization messages are sent. Only the `tacacs+` group is available for this command. |
| `tacacs+` | Use all TACACS+ servers configured by the tacacs-server host command. |
| `default` | Configure the default authorization commands method list. |
| `<list-name>` | Configure a named authorization commands method list |
| `none` | If specified, this provides a local fallback to command authorization so that if authorization servers become unavailable then the device will accept all commands normally allowed for the privilege level of the user. |

**Mode** Global Configuration

**Usage notes** TACACS+ command authorization provides centralized control of the commands available to a user of an AlliedWare Plus device. Once enabled:

- The command string and username are encrypted and sent to the first available configured TACACS+ server (the first server configured) for authorization.

- The TACACS+ server decides if the user is authorized to execute the command and returns the decision to the AlliedWare Plus device.
- Depending on this decision the device will then either execute the command or notify the user that authorization has failed.

If multiple TACACS+ servers are configured, and the first server is unreachable or does not respond, the other servers will be queried, in turn, for an authorization decision. If all servers are unreachable and a local fallback has been configured, with the **none** parameter, then commands are authorized based on the user's privilege level; the same behavior as if command authorization had not been configured. If, however, the local fallback is not configured and all servers become unreachable then all commands except **logout**, **exit**, and **quit** will be denied.

The **default** method list is defined with a local fallback unless configured differently using this command.

**Example**

To configure a commands authorization method list, named TAC15, using all TACACS+ servers to authorize commands for privilege level 15, with a local fallback, use the following commands:

```
awplus# configure terminal
awplus(config)# aaa authorization commands 15 TAC15 group
tacacs+ none
```

To configure the default method list to authorize commands for privilege level 7, with no local fallback, use the following commands:

```
awplus# configure terminal
awplus(config)# aaa authorization commands 7 default group
tacacs+
```

To remove the authorization method list TAC15, use the following commands:

```
awplus# configure terminal
awplus(config)# no aaa authorization commands 15 TAC15
```

**Related commands**

aaa authorization config-commands

authorization commands

tacacs-server host

**Command changes**

Version 5.4.6-2.1: command added

# aaa authorization config-commands

**Overview**

Use this command to enable command authorization on configuration mode commands. By default, command authorization applies to commands in exec mode only.

Use the **no** variant of this command to disable command authorization on configuration mode commands.

**Syntax**

```
aaa authorization config-commands
no aaa authorization config-commands
```

**Default**

By default, command authorization is disabled on configuration mode commands.

**Mode**

Global Configuration

**Usage notes**

If authorization of configuration mode commands is not enabled then all configuration commands are accepted by default, including command authorization commands.

***NOTE:*** *Authorization of configuration commands is required for a secure TACACS+ command authorization configuration as it prevents the feature from being disabled to gain access to unauthorized exec mode commands.*

**Example**

To enable command authorization for configuration mode commands, use the commands:

```
awplus# configure terminal
awplus(config)# aaa authorization config-commands
```

To disable command authorization for configuration mode commands, use the commands:

```
awplus# configure terminal
awplus(config)# no aaa authorization config-commands
```

**Related commands**

aaa authorization commands

authorization commands

tacacs-server host

**Command changes**

Version 5.4.6-2.1: command added

# authorization commands

**Overview** This command applies a command authorization method list, defined using the aaa authorization commands command, to console and VTY lines.

Use the **no** variant of this command to reset the command authorization configuration on the console and VTY lines.

**Syntax**

```
authorization commands <privilege-level> {default|<list-name>}
no authorization commands <privilege-level>
```

| Parameter | Description |
|---|---|
| `<privilege-level>` | The privilege level of the set of commands the method list will be applied to.<br>AlliedWare Plus defines three sets of commands, that are indexed by a level value:<br>**Level = 1**: All commands that can be accessed by a user with privilege level between 1 and 6 inclusive<br>**Level = 7:** All commands that can be accessed by a user with privilege level between 7 and 14 inclusive<br>**Level = 15**: All commands that can be accessed by a user with privilege level 15 |
| `default` | Configure the default authorization commands method list. |
| `<list-name>` | Configure a named authorization commands method list |

**Default** The **default** method list is applied to each console and VTY line by default.

**Mode** Line Configuration

**Usage notes** If the specified method list does not exist users will not be enable to execute any commands in the specified method list on the specified VTY lines.

**Example** To apply the TAC15 command authorization method list with privilege level 15 to VTY lines 0 to 5, use the following commands:

```
awplus# configure terminal
awplus(config)# line vty 0 5
awplus(config-line)# authorization commands 15 TAC15
```

To reset the command authorization configuration with privilege level 15 on VTY lines 0 to 5, use the following commands:

```
awplus# configure terminal
awplus(config)# line vty 0 5
awplus(config-line)# no authorization commands 15
```

**Related commands** aaa authorization commands

aaa authorization config-commands

tacacs-server host

**Command changes**

Version 5.4.6-2.1: command added

# ip tacacs source-interface

**Overview**

This command sets the source interface, or IP address, to use for all TACACS+ packets sent from the device. By default, TACACS+ packets use the source IP address of the egress interface.

Use the **no** variant of this command to remove the source interface configuration and use the source IP address of the egress interface.

**Syntax**

```
ip tacacs source-interface {<interface>|<ip-address>}
no ip tacacs source-interface
```

| Parameter | Description |
|---|---|
| *<interface>* | Interface name. |
| *<ip-address>* | IP address in the dotted decimal format A.B.C.D. |

**Default**

The source IP address of outgoing TACACS+ packets default to the IP address of the egress interface.

**Mode**

Global Configuration

**Usage notes**

Setting the source interface ensures that all TACACS+ packets sent from the device will have the same source IP address. Once configured this affects all TACACS+ packets, namely accounting, authentication, and authorization.

If the specified interface is down or there is no IP address on the interface, then the source IP address of outgoing TACACS+ packets will default to the IP address of the egress interface.

**Example**

To configure all outgoing TACACS+ packets to use the IP address of the loop-back "lo" interface as the source IP address, use the following commands:

```
awplus# configure terminal
awplus(config)# ip tacacs source-interface lo
```

To reset the source interface configuration for all TACACS+ packets, use the following commands:

```
awplus# configure terminal
awplus(config)# no ip tacacs source-interface
```

**Related commands**

tacacs-server host

show tacacs+

**Command changes**

Version 5.4.6-2.1: command added

# show tacacs+

**Overview** This command displays the current TACACS+ server configuration and status.

**Syntax** `show tacacs+`

**Mode** User Exec and Privileged Exec

**Example** To display the current status of TACACS+ servers, use the command:

```
awplus# show tacacs+
```

**Output** Figure 48-1: Example output from the **show tacacs+** command

```
TACACS+ Global Configuration
  Source Interface     : not configured
  Timeout              : 5 sec

Server Host/       Server
IP Address         Status
-------------------------------------------------------------
192.168.1.10       Alive
192.168.1.11       Unknown
```

**Table 1:** Parameters in the output of the **show tacacs+** command

| Output Parameter | Meaning | |
|---|---|---|
| `Source Interface` | IP address of source interface if set with ip tacacs source-interface. | |
| `Timeout` | A time interval in seconds. | |
| `Server Host/IP Address` | TACACS+ server hostname or IP address. | |
| `Server Status` | The status of the authentication port. | |
| | `Alive` | The server is alive. |
| | `Dead` | The server has timed out. |
| | `Error` | The server is not responding or there is an error in the key string entered. |
| | `Unknown` | The server is never used or the status is unkown. |
| | `Unreachable` | The server is unreachable. |
| | `Unresolved` | The server name can not be resolved. |

**Command changes** Version 5.4.6-2.1: **Source Interface** parameter added

# tacacs-server host

**Overview** Use this command to specify a remote TACACS+ server host for authentication, authorization and accounting, and to set the shared secret key to use with the TACACS+ server. The parameters specified with this command override the corresponding global parameters for TACACS+ servers.

Use the **no** variant of this command to remove the specified server host as a TACACS+ authentication and authorization server.

**Syntax**

```
tacacs-server host {<host-name>|<ip-address>} [key
[8]<key-string>]
```

```
no tacacs-server host {<host-name>|<ip-address>}
```

| Parameter | Description |
|---|---|
| *<host-name>* | Server host name. The DNS name of the TACACS+ server host. |
| *<ip-address>* | The IP address of the TACACS+ server host, in dotted decimal notation A.B.C.D. |
| key | Set shared secret key with TACACS+ servers. |
| 8 | Specifies that you are entering a password as a string that has already been encrypted instead of entering a plain text password. The running config displays the new password as an encrypted string even if password encryption is turned off. |
| *<key-string>* | Shared key string applied, a value in the range 1 to 64 characters. Specifies the shared secret authentication or encryption key for all TACACS+ communications between this device and the TACACS+ server. This key must match the encryption used on the TACACS+ server. This setting overrides the global setting of the tacacs-server key command. If no key value is specified, the global value is used. |

**Default** No TACACS+ server is configured by default.

**Mode** Global Configuration

**Usage** A TACACS+ server host cannot be configured multiple times like a RADIUS server.

As many as four TACACS+ servers can be configured and consulted for login authentication, enable password authentication and accounting. The first server configured is regarded as the primary server and if the primary server fails then the backup servers are consulted in turn. A backup server is consulted if the primary server fails, not if a login authentication attempt is rejected. The reasons a server would fail are:

- it is not network reachable
- it is not currently TACACS+ capable

- it cannot communicate with the switch properly due to the switch and the server having different secret keys

**Examples**

To add the server `tac1.company.com` as the TACACS+ server host, use the following commands:

```
awplus# configure terminal
awplus(config)# tacacs-server host tac1.company.com
```

To set the secret key to `secret` on the TACACS+ server `192.168.1.1`, use the following commands:

```
awplus# configure terminal
awplus(config)# tacacs-server host 192.168.1.1 key secret
```

To remove the TACACS+ server `tac1.company.com`, use the following commands:

```
awplus# configure terminal
awplus(config)# no tacacs-server host tac1.company.com
```

**Related commands**

aaa accounting commands

aaa authentication login

tacacs-server key

tacacs-server timeout

show tacacs+

# tacacs-server key

**Overview**

This command sets a global secret key for TACACS+ authentication, authorization and accounting. The shared secret text string is used for TACACS+ communications between the switch and all TACACS+ servers.

Note that if no secret key is explicitly specified for a TACACS+ server with the tacacs-server host command, the global secret key will be used for the shared secret for the server.

Use the **no** variant of this command to remove the global secret key.

**Syntax**

```
tacacs-server key [8] <key-string>
no tacacs-server key
```

| Parameter | Description |
|---|---|
| 8 | Specifies a string in an encrypted format instead of plain text. The running config will display the new password as an encrypted string even if password encryption is turned off. |
| *<key-string>* | Shared key string applied, a value in the range 1 to 64 characters. Specifies the shared secret authentication or encryption key for all TACACS+ communications between this device and all TACACS+ servers. This key must match the encryption used on the TACACS+ server. |

**Mode**

Global Configuration

**Usage notes**

Use this command to set the global secret key shared between this client and its TACACS+ servers. If no secret key is specified for a particular TACACS+ server using the tacacs-server host command, this global key is used.

**Examples**

To set the global secret key to `secret` for TACACS+ server, use the following commands:

```
awplus# configure terminal
awplus(config)# tacacs-server key secret
```

To delete the global secret key for TACACS+ server, use the following commands:

```
awplus# configure terminal
awplus(config)# no tacacs-server key
```

**Related commands**

tacacs-server host

show tacacs+

# tacacs-server timeout

**Overview**

Use this command to specify the TACACS+ global timeout value. The timeout value is how long the device waits for a reply to a TACACS+ request before considering the server to be dead.

Note that this command configures the **timeout** parameter for TACACS+ servers globally.

The **no** variant of this command resets the transmit timeout to the default (5 seconds).

**Syntax**

```
tacacs-server timeout <seconds>
no tacacs-server timeout
```

| Parameter | Description |
|---|---|
| *<seconds>* | TACACS+ server timeout in seconds, in the range 1 to 1000. |

**Default**

The default timeout value is 5 seconds.

**Mode**

Global Configuration

**Examples**

To set the timeout value to 3 seconds, use the following commands:

```
awplus# configure terminal
awplus(config)# tacacs-server timeout 3
```

To reset the timeout period for TACACS+ servers to the default, use the following commands:

```
awplus# configure terminal
awplus(config)# no tacacs-server timeout
```

**Related commands**

tacacs-server host

show tacacs+

# Part 6: High Availability

# 49 High Availability Commands

## Introduction

**Overview** This chapter provides an alphabetical reference of commands used to configure high availability. For more information, see the High Availability Feature Overview and Configuration_Guide.

**Command List**


- "ha associate" on page 2337
- "wan-bypass (interface mode)" on page 2339

# ha associate

**Overview** This command is used to change the mode of a VRRP session to High Availability (HA) mode, and to associate it with a HA bypass port.

Use the **no** variant of this command to take the VRRP session out of HA-Mode.

**Syntax**

```
ha associate [wan-bypass <1-2>]
no ha associate [wan-bypass <1-2>]
```

| Parameter | Description |
|---|---|
| *<wan-bypass>* | The control wan bypass port. |
| *<1-2>* | The identifier number of wan bypass port. |

**Default** The default state of bypass port 1 and port 2 is deactivated.

**Mode** Router Configuration

**Usage notes** One VRRP session can have the control of one or two bypass ports. After VRRP has the control of the wan-bypass ports, the state of the wan-bypass ports will be determined by the VRRP state. If the VRRP session is in master state, then the associated wan-bypass ports will be deactivated. If the VRRP session is in backup or initial state, then the associated wan-bypass ports will be activated.

If no wan-bypass ports are specified, then it puts the VRRP session in HA mode and the wan-bypass ports will always be deactived.

If there are one or more VRRP sessions running in HA mode, then the wan-bypass ports should not be controlled by an other feature.

**Examples** To change a VRRP session into HA mode, use the following commands:

```
awplus#configure terminal
awplus(config)#router vrrp 1 vlan1
awplus(config-router)#ha associate
```

To change a VRRP session into HA mode and allow it to control wan-bypass port 1, use the following commands:

```
awplus#configure terminal
awplus(config)#vrrp 1 vlan1
awplus(config-router)#ha associate wan-bypass 1
```

To change a VRRP session to stop control of a wan-bypass port 1, use the following commands:

```
awplus#configure terminal
awplus(config)#router vrrp 1 vlan1
awplus(config-router)#no ha associate wan-bypass 1
```

To change a VRRP session out of HA-mode, use the following commands:

```
awplus#configure terminal
awplus(config)#router vrrp 1 vlan1
awplus(config-router)#no ha associate
```

**Related commands**

show vrrp

# wan-bypass (interface mode)

**Overview**

Use this command to manually activate bypass mode for a device's Ethernet interface. In bypass mode, the Ethernet interface is electrically disconnected from the device and diverted to the associated bypass port.

Use the **no** variant of this command to deactivate bypass mode.

**Syntax**

```
wan-bypass
no wan-bypass
```

**Default**

Bypass mode is deactivated by default.

**Mode**

Interface Configuration for an Eth interface.

**Example**

To activate bypass mode on the interface eth1, use the commands:

```
awplus# configure terminal
awplus(config)# interface eth1
awplus(config-if)# wan-bypass
```

To deactivate bypass mode on the interface eth1, use the commands:

```
awplus# configure terminal
awplus(config)# interface eth1
awplus(config-if)# no wan-bypass
```

**Related commands**

ha associate

**Command changes**

Version 5.5.0-1.3: command added

# 50 VRRP Commands

## Introduction

**Overview**

This chapter provides an alphabetical reference for commands used to configure the Virtual Router Redundancy Protocol (VRRP). For more information, see the VRRP Feature Overview and Configuration Guide.

For information on filtering and saving command output, see the "Getting Started with AlliedWare Plus" Feature Overview and Configuration Guide.

**Command List**


- "advertisement-interval" on page 2342
- "alternate-checksum-mode" on page 2344
- "circuit-failover" on page 2345
- "debug vrrp" on page 2347
- "debug vrrp events" on page 2348
- "debug vrrp packet" on page 2349
- "disable (VRRP)" on page 2350
- "enable (VRRP)" on page 2351
- "preempt-mode" on page 2352
- "priority" on page 2354
- "router ipv6 vrrp (interface)" on page 2356
- "router vrrp (interface)" on page 2358
- "show debugging vrrp" on page 2360
- "show running-config router ipv6 vrrp" on page 2361
- "show running-config router vrrp" on page 2362
- "show vrrp" on page 2363
- "show vrrp counters" on page 2365
- "show vrrp ipv6" on page 2368

- "show vrrp (session)" on page 2369
- "transition-mode" on page 2371
- "undebug vrrp" on page 2373
- "undebug vrrp events" on page 2374
- "undebug vrrp packet" on page 2375
- "virtual-ip" on page 2376
- "virtual-ipv6" on page 2378
- "vrrp vmac" on page 2380

# advertisement-interval

**Overview** Use this command to configure the advertisement interval of the virtual router. This is the length of time, in seconds, between each advertisement sent from the master to its backup(s).

IPv6 VRRP advertisements are sent to the multicast address assigned to the VRRP group (ff02:0:0:0:0) and a backup virtual router has to join all multicast groups within this range. VRRP advertisements are sent to a multicast address (ff02::12) every second by default.

Use the **no** variant of this command to remove an advertisement interval of the virtual router, which has been set using the **advertisement-interval** command, and revert to the default advertisement interval of 1 second.

**Syntax**

```
advertisement-interval [<1-255>|csec <1-4095>]
no advertisement-interval
```

| Parameter | Description |
|---|---|
| *<1-255>* | Specifies the advertisement interval in seconds. |
| csec | Use centiseconds instead of seconds for the advertisement interval. |
| *<1-4095>* | Specifies the advertisement interval in centiseconds. |

**Default** The default advertisement interval is 1 second.

**Mode** Router Configuration

**Usage notes** See the VRRP Feature Overview and Configuration Guide for more information about:

- setting the advertisement-interval when configuring VRRP
- using seconds for VRRPv2 host compatibility whenever you use transition-mode to upgrade or transition from VRRPv2 to VRRPv3
- VRRPv3 IPv4 configuration details
- VRRPv3 IPv6 configuration details

**Examples** The example below shows you how to configure the advertisement interval to 6 seconds for the VRRP IPv4 session with VR ID 5 on interface vlan2:

```
awplus# configure terminal
awplus(config)# router vrrp 5 vlan2
awplus(config-router)# advertisement-interval 6
```

The example below shows you how to reset the advertisement interval to the default of 1 second for the VRRP IPv4 session with VR ID 5 on interface vlan2:

```
awplus# configure terminal
awplus(config)# router vrrp 5 vlan2
awplus(config-router)# no advertisement-interval
```

The example below shows you how to configure the advertisement interval to 6 seconds for the VRRPv3 IPv6 session with VR ID 5 on interface vlan2:

```
awplus# configure terminal
awplus(config)# router ipv6 vrrp 5 vlan2
awplus(config-router)# advertisement-interval 6
```

**Related commands**

router vrrp (interface)

router ipv6 vrrp (interface)

# alternate-checksum-mode

**Overview**

Use this command to enable an alternate checksum mode for VRRPv3 to allow inter-operability with some other vendors' products. The IPv4 checksum for VRRPv3 advertisements will then use a pseudo header in the calculation.

This mode may be required if the other product indicates checksum errors on VRRP packets sent by AlliedWare Plus devices.

Use the **no** variant of this command to disable the alternate checksum mode.

**Syntax**

```
alternate-checksum-mode
no alternate-checksum-mode
```

**Default**

Disabled

**Mode**

Router Configuration

**Example**

To turn on the alternate checksum mode for VRRP instance 1 on VLAN1, use the commands:

```
awplus# configure terminal
awplus(config)# router vrrp 1 vlan1
awplus(config-router)# alternate-checksum-mode
```

To turn off the alternate checksum mode for VRRP instance 1 on VLAN1, use the commands:

```
awplus# configure terminal
awplus(config)# router vrrp 1 vlan1
awplus(config-router)# no alternate-checksum-mode
```

**Related commands**

show running-config

**Command changes**

Version 5.4.7-1.1: command added

# circuit-failover

**Overview** Use this command to enable the VRRP circuit failover feature.

Circuit failover enables the device to take action if the uplink interface goes down, so that the VRRP backup, whose uplink interface is still active, takes over as VRRP master. See the Usage section below and the VRRP Feature Overview and Configuration Guide for more information.

Use the **no** variant of this command to disable this feature.

**Syntax**

```
circuit-failover <interface> <1-253>
no circuit-failover [<interface> <1-253>]
```

| Parameter | Description |
|---|---|
| *<interface>* | The interface of the router that is monitored. The interface must exist on the router, and is usually an upstream interface. Should the interface go down, then another router that is configured as a backup router in the group takes over as the master. You should configure the circuit failover on an interface other than the active VRRP interface - generally the uplink interface. |
| *<1-253>* | Delta value. The value by which virtual routers decrement their priority value during a circuit failover event. Configure this value to be greater than the difference of priorities on the master and backup routers. In the case of failover, this priority delta value is subtracted from the current VR Master Router priority value. |

**Mode** Router Configuration

**Usage notes** You can use Circuit Failover to monitor up to 32 interfaces per VRRP instance. If a VRRP instance is configured to monitor multiple interfaces, the VRRP priority will be cumulatively decremented by the configured delta for each interface as it goes down.

For example, if VRRP is configured to monitor VLAN2 and VLAN3 with the commands:

```
awplus# configure terminal
awplus(config)# interface vlan1
awplus(config-if)# ip address 192.168.1.1/24
awplus(config-if)# exit
awplus(config)# router vrrp 1 vlan1
awplus(config-router)# virtual-ip 192.168.1.10 backup
awplus(config-router)# priority 100
awplus(config-router)# circuit-failover vlan2 10
awplus(config-router)# circuit-failover vlan3 20
```

then the following examples explain the effect of each VLAN going down:

- If only VLAN2 fails, then the VRRP priority will be decremented by 10. VRRP priority would be adjusted to become 90, because 100 - 10 = 90.
- If only VLAN3 fails, then the VRRP priority will be decremented by 20. VRRP priority would be adjusted to become 80, because 100 - 20 = 80.
- If both VLAN2 and VLAN3 fail, then the VRRP priority will be decremented by the cumulative delta values of all monitored interfaces. VRRP priority would therefore be adjusted to become 70, because 100 - 10 - 20 = 70.

As each monitored interface recovers, the VRRP priority is incremented by the same delta value.

When you configure the delta values of the monitored interfaces, make sure their sum is high enough to ensure that the VRRP priority stays above zero if all the interfaces go down.

**Examples**

To configure circuit failover on an IPv4 VRRP instance, so that if interface VLAN3 goes down, then the priority of VRRP instance 1 is reduced by 30, use the commands:

```
awplus# configure terminal
awplus(config)# router vrrp 1 vlan2
awplus(config-router)# circuit-failover vlan3 30
```

To remove all configured circuit failovers for the VRRP IPv4 session with VR ID 1 on interface vlan2, use the commands:

```
awplus# configure terminal
awplus(config)# router vrrp 1 vlan2
awplus(config-router)# no circuit-failover
```

To configure circuit failover on a VRRPv3 IPv6 session with VR ID 1, so that when interface VLAN3 goes down, the priority of VRRP instance 1is reduced by 30, use the commands:

```
awplus# configure terminal
awplus(config)# router ipv6 vrrp 1 vlan2
awplus(config-router)# circuit-failover vlan3 30
```

To remove all configured circuit failovers for the VRRPv3 IPv6 session with VR ID 1 on interface vlan2, use the commands:

```
awplus# configure terminal
awplus(config)# router ipv6 vrrp 1 vlan2
awplus(config-router)# no circuit-failover
```

**Related commands**

router vrrp (interface)

router ipv6 vrrp (interface)

# debug vrrp

**Overview**

Use this command to specify debugging options for VRRP. The **all** parameter turns on all the debugging options.

Use the **no** variant of this command to disable this function.

**Syntax**

```
debug vrrp [all]
no debug vrrp [all]
```

**Mode**

Privileged Exec and Global Configuration

**Usage notes**

See the VRRP Feature Overview and Configuration Guide for more information about VRRPv3 debugging details.

**Examples**

The example below shows you how to enable all debugging for VRRP:

```
awplus# configure terminal
awplus(config)# debug vrrp all
```

The example below shows you how to disable all debugging for VRRP:

```
awplus# configure terminal
awplus(config)# no debug vrrp all
```

**Related commands**

show debugging vrrp

undebug vrrp

# debug vrrp events

**Overview**

Use this command to specify debugging options for VRRP event troubleshooting.

Use the **no** variant of this command to disable this function.

**Syntax**

```
debug vrrp events
no debug vrrp events
```

**Mode**

Privileged Exec and Global Configuration

**Usage notes**

The **debug vrrp events** command enables the display of debug information related to VRRP internal events.

See the VRRP Feature Overview and Configuration Guide for more information about VRRPv3 debugging details.

**Examples**

The example below shows you how to enable events debugging for VRRP:

```
awplus# configure terminal
awplus(config)# debug vrrp events
```

The example below shows you how to disable events debugging for VRRP:

```
awplus# configure terminal
awplus(config)# no debug vrrp events
```

**Related commands**

show debugging vrrp

undebug vrrp events

# debug vrrp packet

**Overview**

Use this command to specify debugging options for VRRP packets.

Use the **no** variant of this command to disable this function.

**Syntax**

```
debug vrrp packet [send|recv]
no debug vrrp packet [send|recv]
```

| Parameter | Description |
|---|---|
| send | Specifies the debug option set for sent packets. |
| recv | Specifies the debug option set for received packets. |

**Mode**

Privileged Exec and Global Configuration

**Usage notes**

The **debug vrrp packet** command enables the display of debug information related to the sending and receiving of packets.

See the VRRP Feature Overview and Configuration Guide for more information about VRRPv3 debugging details.

**Examples**

The example below shows you how to enable received and sent packet debugging for VRRP:

```
awplus# configure terminal
awplus(config)# debug vrrp packet
```

The example below shows you how to enable only received packet debugging for VRRP:

```
awplus# configure terminal
awplus(config)# debug vrrp packet recv
```

The example below shows you how to enable only sent packet debugging for VRRP:

```
awplus# configure terminal
awplus(config)# debug vrrp packet send
```

The example below shows you how to disable packet debugging for VRRP:

```
awplus# configure terminal
awplus(config)# no debug vrrp packet
```

**Related commands**

show debugging vrrp

undebug vrrp packet

# disable (VRRP)

**Overview**

Use this command to disable a VRRP IPv4 session or a VRRPv3 IPv6 session on the router to stop it participating in virtual routing. Note that when this command is configured then a backup router assumes the role of master router depending on its priority. See the enable (VRRP) command to enable a VRRP IPv4 session or a VRRPv3 IPv6 session on the router.

**Syntax**

```
disable
```

**Mode**

Router Configuration

**Usage notes**

See the VRRP Feature Overview and Configuration Guide for more information about VRRPv3 IPv4 and IPv6 configuration details.

**Examples**

The example below shows you how to disable the VRRP session for VRRP VR ID 5 on vlan2:

```
awplus# configure terminal
awplus(config)# router vrrp 5 vlan2
awplus(config-router)# disable
```

The example below shows you how to disable the VRRPv3 session for VRRPv3 VR ID 3 on vlan1:

```
awplus# configure terminal
awplus(config)# router ipv6 vrrp 3 vlan1
awplus(config-router)# disable
```

**Related commands**

enable (VRRP)

router vrrp (interface)

router ipv6 vrrp (interface)

show vrrp

# enable (VRRP)

**Overview** Use this command to enable the VRRP session on the router to make it participate in virtual routing. To make changes to the VRRP configuration, first disable the router from participating in virtual routing using the disable (VRRP) command.

**Syntax** `enable`

**Mode** Router Configuration

**Usage notes** You must configure the virtual IP address and define the interface for the VRRP session (using the virtual-ip or virtual-ipv6 and the router vrrp (interface) or router ipv6 vrrp (interface) commands) before using this command.

See the VRRP Feature Overview and Configuration Guide for more information about VRRPv3 IPv4 and IPv6 configuration details.

**Examples** To enable the VRRP session for VRRP VR ID 5 on vlan2, use the commands:

```
awplus# configure terminal
awplus(config)# router vrrp 5 vlan2
awplus(config-router)# enable
```

To enable the VRRPv3 session for VRRPv3 VR ID 3 on vlan1, use the commands:

```
awplus# configure terminal
awplus(config)# router ipv6 vrrp 3 vlan1
awplus(config-router)# enable
```

**Related commands**

disable (VRRP)

router vrrp (interface)

router ipv6 vrrp (interface)

show vrrp

virtual-ip

virtual-ipv6

# preempt-mode

**Overview** Use this command to configure preempt mode. If preempt-mode is set to **true**, then the highest priority backup will always be the master when the default master is unavailable.

If preempt-mode is set to **false**, then a higher priority backup will not preempt a lower priority backup who is acting as master.

If preempt-mode is set to **true**, an extra parameter is available called **delay-time**. If the delay-time parameter is used, a VRRP router with a higher priority will wait the configured length of time before it preempts the lower priority VRRP router to take over as master.

**Syntax**

```
preempt-mode {true|false}[delay-time <0-3600>]
```

| Parameter | Description |
|---|---|
| `true` | Preemption is enabled. |
| `false` | Preemption is disabled. |
| `delay-time` | Enable preempting but delay the preempt by the amount of seconds specified by the delay-time value. Note, a delay-time of 0 means delayed preempting is disabled. |

**Default** The default is **true**.

**Mode** Router Configuration

**Usage notes** When the master router fails, the backup routers come online in priority order—highest to lowest. Preempt mode means that a higher priority back up router will take over the master role from a lower priority back up. Preempt mode set to **true** allows a higher priority backup router to relieve a lower priority backup router.

By default, a preemptive scheme is enabled whereby a higher priority backup virtual router that becomes available takes over from the backup virtual router that was previously elected to become the master virtual router.

This preemptive scheme can be disabled using the **preempt-mode false** command. If preemption is disabled on a backup virtual router that is starting up, and this router has a higher priority than the current master, the higher priority backup will not preempt the current master, and the lower priority master will stay in the master role.

See the VRRP Feature Overview and Configuration Guide for more information about:

- VRRPv3 IPv4 configuration details
- VRRPv3 IPv6 configuration details
- preempt mode and preempt delay-time

**Examples**

The example below shows you how to configure preempt-mode as true for VRRP VR ID 5 on vlan2:

```
awplus# configure terminal
awplus(config)# router vrrp 5 vlan2
awplus(config-router)# preempt-mode true
```

The example below shows you how to configure preempt-mode as false for VRRP VR ID 5 on vlan2:

```
awplus# configure terminal
awplus(config)# router vrrp 5 vlan2
awplus(config-router)# preempt-mode false
```

The example below shows you how to configure preempt-mode as true for VRRPv3 VR ID 3 on vlan1:

```
awplus# configure terminal
awplus(config)# router ipv6 vrrp 3 vlan1
awplus(config-router)# preempt-mode true
```

The example below shows you how to configure preempt-mode as false for VRRPv3 VR ID 3 on vlan1:

```
awplus# configure terminal
awplus(config)# router ipv6 vrrp 3 vlan1
awplus(config-router)# preempt-mode false
```

The example below shows you how to configure delay-time as 20 seconds for VRRPv3 VR ID 5 on vlan5:

```
awplus# configure terminal
awplus(config)# router ipv6 vrrp 5 vlan5
awplus(config-router)# preempt-mode true delay-time 20
```

**Related commands**

circuit-failover

priority

router vrrp (interface)

router ipv6 vrrp (interface)

# priority

**Overview** Use this command to configure the VRRP router priority within the virtual router. The highest priority router is Master (unless preempt-mode is false).

Use the **no** variant of this command to remove the VRRP router priority within the virtual router, which has been set using the **priority** command.

**Syntax**

```
priority <1-255>
no priority
```

| Parameter | Description |
|---|---|
| *<1-255>* | The priority. For the master router, use 255 for this parameter; otherwise use any number from the range <1-254>. |

**Default** Defaults for priority are: **master router**= 255; **backup**= 100.

**Mode** Router Configuration

**Usage notes** Priority determines the role that each VRRP router plays and what happens if the master virtual router fails. If a VRRP router owns the IP address of the virtual router and the IP address of the interface, then this VRRP router functions as the master virtual router.

Priority also determines whether a VRRP router functions as a backup virtual router and the order of ascendancy to becoming a master virtual router if the master virtual router fails. Configure the priority of each backup virtual router with a a value of 1 through 254.

See the VRRP Feature Overview and Configuration Guide for more information about VRRPv3 IPv4 and IPv6 configuration details.

**Examples** The example below shows you how to configure 101 as the priority for VRRP VR ID 5 on vlan2:

```
awplus# configure terminal
awplus(config)# router vrrp 5 vlan2
awplus(config-router)# priority 101
```

The example below shows you how to remove the priority configured for VRRP VR ID 5 on vlan2:

```
awplus# configure terminal
awplus(config)# router vrrp 5 vlan2
awplus(config-router)# no priority
```

The example below shows you how to configure 101 as the priority for VRRPv3 VR ID 3 on vlan1:

```
awplus# configure terminal
awplus(config)# router ipv6 vrrp 3 vlan1
awplus(config-router)# priority 101
```

The example below shows you how to remove the configured priority for VRRPv3 VR ID 3 on vlan1:

```
awplus# configure terminal
awplus(config)# router ipv6 vrrp 3 vlan1
awplus(config-router)# no priority
```

**Related commands**

circuit-failover

preempt-mode

# router ipv6 vrrp (interface)

**Overview** Use this command to configure VRRPv3 for IPv6 and define the interface that will participate in virtual routing to send and receive advertisement messages. This command allows you to enter the Router Configuration mode.

Use the **no** variant of this command to remove the VRRPv3 for IPv6 configuration. Disable the VRRP session before using the **no** variant of this command.

**Syntax**

```
router ipv6 vrrp <vrid> <interface>
no router ipv6 vrrp <vrid> <interface>
```

| Parameter | Description |
|---|---|
| *<vrid>* | *<1-255>* The ID of the virtual router VRRPv3 IPv6 session to create. |
| *<interface>* | Specify the name of the interface that will participate in the virtual routing. The interface must exist on the router. The interface specified sends and receives VRRPv3 IPv6 advertisement messages. |

**Mode** Global Configuration

**Usage notes** Use the required *<interface>* placeholder to define the interface that will participate in virtual routing. This interface is used for two purposes - to send/receive advertisement messages and to forward on behalf of the virtual router when in master state.

***NOTE:*** *Tunnels and PPP interfaces are not supported. VRRP is only configurable on VLANs.*

***NOTE:*** *Configuring a high number of instances may adversely affect the device's performance, depending on the device CPU, the other protocols it is running, and whether you set the advertisement interval to less than 1 second.*

See the VRRP Feature Overview and Configuration Guide for more information about VRRPv3 IPv6 configuration details.

**Examples** The example below shows you how to enable a VRRPv3 session with VR ID 3 on vlan2:

```
awplus# configure terminal
awplus(config)# router ipv6 vrrp 3 vlan2
awplus(config-router)# enable
awplus(config-router)#
```

The example below shows you how to disable a VRRPv3 session with VR ID 3 on vlan2:

```
awplus(config-router)# disable
awplus(config-router)# exit
awplus(config)# no router ipv6 vrrp 3 vlan2
awplus(config)#
```

**Related commands**

advertisement-interval

circuit-failover

# router vrrp (interface)

**Overview** Use this command to configure VRRP IPv4 and define the interface that will participate in virtual routing to send and receive advertisement messages. This command allows you to enter the Router Configuration mode.

Use the **no** variant of this command to remove the VRRP IPv4 configuration. Disable the VRRP session before using the **no** variant of this command.

**Syntax**

```
router vrrp <vrid> <interface>
no router vrrp <vrid> <interface>
```

| Parameter | Description |
|---|---|
| *<vrid>* | *<1-255>* The ID of the virtual router VRRP IPv4 session to create. |
| *<interface>* | Specify the name of the interface that will participate in the virtual routing. The interface must exist on the router. The interface specified sends and receives VRRP IPv4 advertisement messages. |

**Mode** Global Configuration

**Usage notes** Use the required *<interface>* placeholder to define the interface that will participate in virtual routing. This interface is used for two purposes - to send/receive advertisement messages and to forward on behalf of the virtual router when in master state.

***NOTE:*** *Tunnels and PPP interfaces are not supported. VRRP is only configurable on VLANs*

***NOTE:*** *Configuring a high number of instances may adversely affect the device's performance, depending on the device CPU, the other protocols it is running, and whether you set the advertisement interval to less than 1 second.*

See the VRRP Feature Overview and Configuration Guide for more information about VRRPv3 IPv4 configuration details.

**Examples** To enable a VRRP session with VR ID 5 on vlan1, use the commands:

```
awplus# configure terminal
awplus(config)# router vrrp 5 vlan1
awplus(config-router)# enable
```

To disable a VRRP session with VR ID 5 on vlan1, use the commands:

```
awplus(config-router)# disable
awplus(config-router)# exit
awplus(config)# no router vrrp 5 vlan1
```

**Related commands**

advertisement-interval

circuit-failover

disable (VRRP)

enable (VRRP)

# show debugging vrrp

**Overview**

Use this command to display the set VRRP debugging option. Use the terminal monitor command to display output on the console otherwise debug output is in the log file.

For information on filtering and saving command output, see the "Getting Started with AlliedWare Plus" Feature Overview and Configuration Guide.

See the VRRP Feature Overview and Configuration Guide for more information about VRRPv3 debugging details.

**Syntax**

```
show debugging vrrp
```

**Mode**

User Exec and Privileged Exec

**Example**

The example below shows you how to display VRRP debugging:

```
awplus# show debugging vrrp
```

**Related commands**

debug vrrp

debug vrrp events

debug vrrp packet

# show running-config router ipv6 vrrp

**Overview** Use this command to show the running configuration for VRRPv3 IPv6.

For information on filtering and saving command output, see the "Getting Started with AlliedWare Plus" Feature Overview and Configuration Guide.

See the VRRP Feature Overview and Configuration Guide for more information about VRRPv3 IPv6 configuration details.

**Syntax**

```
show running-config router vrrp
```

**Mode** Privileged Exec, Global Configuration, Line Configuration, and Interface Configuration.

**Example** The example below shows you how to display the running configuration for VRRPv3 IPv6:

```
awplus# show running-config router ipv6 vrrp
```

**Output** Figure 50-1: Example output from the **show running-config router ipv6 vrrp** command

```
!
router ipv6 vrrp 3 vlan3
 virtual-ip fe80::202:b3ff:fed5:983e master
 circuit-failover vlan3 3
 advertisement-interval 6
 preempt-mode false
!
```

# show running-config router vrrp

**Overview** Use this command to show the running configuration for VRRP IPv4.

For information on filtering and saving command output, see the "Getting Started with AlliedWare Plus" Feature Overview and Configuration Guide.

See the VRRP Feature Overview and Configuration Guide for more information about VRRPv3 IPv4 configuration details.

**Syntax**

```
show running-config router vrrp
```

**Mode** Privileged Exec, Global Configuration, Line Configuration, and Interface Configuration.

**Example** The example below shows you how to display the running configuration for VRRP IPv4:

```
awplus# show running-config router vrrp
```

**Output** Figure 50-2: Example output from the **show running-config router vrrp** command

```
!
router vrrp 2 vlan2
 circuit-failover vlan2 2
 advertisement-interval 4
 preempt-mode true
!
```

# show vrrp

**Overview** Use this command to display information about all VRRP IPv4 sessions. This command shows a summary when the optional **brief** parameter is used.

For information on filtering and saving command output, see the "Getting Started with AlliedWare Plus" Feature Overview and Configuration Guide.

See the VRRP Feature Overview and Configuration Guide for more information about VRRPv3 IPv4 configuration details.

**Syntax** `show vrrp [brief]`

| Parameter | Description |
|---|---|
| `brief` | Brief summary of VRRP sessions. |

**Mode** User Exec and Privileged Exec

**Example** To display information about all VRRP IPv4 sessions, enter the command:

```
awplus# show vrrp
```

To display brief summary output about VRRP IPv4 sessions, enter the command:

```
awplus# show vrrp brief
```

**Output** Figure 50-3: Example output from the **show vrrp** command

```
awplus#show vrrp
VMAC enabled
Address family IPv4
VRRP Id: 1 on interface: vlan2
 State: AdminUp   - Master
 Virtual IP address: 192.168.1.2 (Not-owner)
 Priority is 100
 Advertisement interval: 100 centiseconds
 Preempt mode: TRUE
 Multicast membership on IPv4 interface vlan2: JOINED
 Transition mode: FALSE
 Accept mode: FALSE
 Master address: 192.168.1.3
 High Availability: enabled
  wan-bypass 1 (eth1) is on
```

Figure 50-4: Example output from the **show vrrp brief** command

```
awplus#show vrrp brief
Interface         Grp  Prio Own  Pre  State      Master addr      Group addr
 vlan10             1   200   N    P  Master     192.168.10.4     192.168.10.253
 vlan10             2   150   N    P  Backup     192.168.10.4     192.168.10.254
 vlan11             3   200   N    P  Master     192.168.11.4     192.168.11.253
 vlan11             4   150   N    P  Backup     192.168.11.4     192.168.11.254
```

**Related commands**

enable (VRRP)

disable (VRRP)

# show vrrp counters

**Overview** This command displays VRRP SNMP counters on the console, as described in the VRRP MIB and RFC2787, for debugging use while you configure VRRP with commands in this chapter.

For information on filtering and saving command output, see the "Getting Started with AlliedWare Plus" Feature Overview and Configuration Guide.

**Syntax**

```
show vrrp counters
```

**Mode** User Exec and Privileged Exec

**Usage notes** The output has a section for global counters and a section of counters for each VRRP instance configured. See the descriptions of the counters below the sample output as per RFC2787.

***NOTE:*** *Note that the counters displayed with this commands are the same counters as described in RFC 2787 (Copyright (C) The Internet Society (2000). All Rights Reserved) except for the "Monitored Circuit Up" and "Monitored Circuit Down" counters, which are additions beyond the MIB.*

**Example** To display information about VRRP SNMP counters on the console, enter the command:

```
awplus# show vrrp counters
```

Figure 50-5: Example output from the **show vrrp counters** command

```
awplus#show vrrp counters
VRRP Global Counters:
  Checksum Errors .... 230
  Version Errors ..... 0
  VRID Errors ........ 230

VRRP IPv4 counters for VR 10/vlan10:
  Master Transitions ........ 0
  Received Advertisements ... 0
  Internal Errors ........... 0
  TTL Errors ................ 0
  Received Priority 0 Pkt ... 0
  Sent Priority 0 Pkt ....... 0
  Received Invalid Type ..... 0
  Address List Errors ....... 0
  Packet Length Errors ...... 0
  Monitored Circuit Up ...... 0
  Monitored Circuit Down..... 0
```

```
VRRP IPv4 counters for VR 100/vlan100:
  Master Transitions ........ 1
  Received Advertisements ... 1614
  Internal Errors ........... 0
  TTL Errors ................ 0
  Received Priority 0 Pkt ... 0
  Sent Priority 0 Pkt ....... 0
  Received Invalid Type ..... 0
  Address List Errors ....... 0
  Packet Length Errors ...... 0
  Monitored Circuit Up ...... 0
  Monitored Circuit Down..... 2
```

**Table 1:** Global counters with descriptions for the **show vrrp counters** command:

| Counter | Description |
|---|---|
| `Checksum Errors` | The total number of VRRP packets received with an invalid VRRP checksum value. |
| `Version Errors` | The total number of VRRP packets received with an unknown or unsupported version number. |
| `VRID Errors` | The total number of VRRP packets received with an invalid VRID for this virtual router. |

**Table 2:** Per VR counters with descriptions for the **show vrrp counters** command:

| Counter | Description |
|---|---|
| `Master Transitions` | The total number of times that this virtual router's state has transitioned to MASTER. |
| `Received Advertisements` | The total number of VRRP advertisements received by this virtual router. |
| `Internal Errors` | The total number of VRRP advertisement packets received for which the advertisement interval is different than the one configured for the local virtual router. |
| `TTL Errors` | The total number of VRRP packets received by the virtual router with IP TTL (Time-To-Live) not equal to 255. |
| `Received Priority 0 Pkt` | The total number of VRRP packets received by the virtual router with a priority of '`0`'. |
| `Sent Priority 0 Pkt` | The total number of VRRP packets sent by the virtual router with a priority of '`0`'. |
| `Received Invalid Type` | The number of VRRP packets received by the virtual router with an invalid value in the '`type`' field. |
| `Address List Errors` | The total number of packets received for which the address list does not match the locally configured list for the virtual router. |

**Table 2:** Per VR counters with descriptions for the **show vrrp counters** command: (cont.)

| Counter | Description |
|---|---|
| `Packet Length Errors` | The total number of packets received with a packet length less than the length of the VRRP header. |
| `Monitored Circuit Up` | The total number of times the monitored circuit has generated the UP event. |
| `Monitored Circuit Down` | The total number of times the monitored circuit has generated the down event. |

# show vrrp ipv6

**Overview** Use this command to display information about all configured VRRPv3 IPv6 sessions for all interfaces, or all VRRPv3 IPv6 sessions for a given interface with the optional parameter.

For information on filtering and saving command output, see the "Getting Started with AlliedWare Plus" Feature Overview and Configuration Guide.

See the VRRP Feature Overview and Configuration Guide for more information about VRRPv3 IPv6 configuration details.

**Syntax**

```
show vrrp ipv6 [<interface>]
```

| Parameter | Description |
|---|---|
| *<interface>* | Specify the name of the interface that will participate in the virtual routing. The interface must exist on the router. The interface specified sends and receives VRRPv3 IPv6 advertisement messages. |

**Mode** User Exec and Privileged Exec

**Example** To display information about all VRRPv3 IPv6 sessions, enter the command:

```
awplus# show vrrp ipv6
```

**Output** Figure 50-6: Example output from the **show vrrp ipv6 vlan2** command

```
awplus#show vrrp ipv6 vlan2
VrId <1>
 State is Master
 Virtual IP is fe80::202:b3ff:fed5:983e (Owner)
 Interface is vlan2
 Priority is 255
 Advertisement interval is 4 sec
 Preempt mode is FALSE
```

**Related commands**

enable (VRRP)

disable (VRRP)

# show vrrp (session)

**Overview** Use this command to display information for a particular VRRP session.

For information on filtering and saving command output, see the "Getting Started with AlliedWare Plus" Feature Overview and Configuration Guide.

See the VRRP Feature Overview and Configuration Guide for more information about VRRPv3 IPv4 configuration details.

**Syntax** `show vrrp <vrid> <interface>`

| Parameter | Description |
|---|---|
| *<vrid>* | *<1-255>* The virtual router ID for which to display information. Session must already exist. |
| *<interface>* | The interface to display information about, for instance, `vlan2`. |

**Mode** User Exec and Privileged Exec

**Usage notes** See the below sample output from the **show vrrp** command displaying information about VRRP session 1 configured on **vlan2**. Output shows that a Virtual IP address has been set.

```
awplus# show vrrp 1 vlan2
```

```
awplus#show vrrp 1 vlan2
Address family IPv4
VrId <1>
 Interface is vlan2
 State is Initialize
 Virtual IP address is 10.10.11.250 (Not IP owner)
 Priority is 100
 Advertisement interval is 1 sec
 Preempt mode is TRUE
 Multicase membership on IPv4 interface vlan1: JOINED
 Transition mode: FALSE
 Accept mode: TRUE
 Master address: 192.168.24.5
 High Availability:
enabled
  wan-bypass 1 (eth1) is on
```

See the below sample output from the **show vrrp** command displaying information about VRRP session 1 configured on **vlan3**. Output shows a Virtual IP address has not been set.

```
awplus# show vrrp 1 vlan3
```

```
awplus#show vrrp 1 vlan3
Address family IPv4
VrId <1>
 Interface is vlan3
 State is Initialize
 Virtual IP address is unset
 Priority is 100
 Advertisement interval is 1 sec
 Preempt mode is TRUE
Preempt mode is TRUE
 Multicase membership on IPv4 interface vlan3: JOINED
 Transition mode: FALSE
 Accept mode: TRUE
 Master address: 192.168.24.5
 High Availability:
enabled
  wan-bypass 1 (eth1) is on
```

**Example** The following command shows information about VRRP session 5 for interface **vlan2**.

```
awplus# show vrrp 5 vlan2
```

# transition-mode

**Overview** Use this command to configure the IPv4 transition mode. Transition mode allows you to upgrade from VRRPv2 to VRRPv3 and gives interoperability between VRRPv2 and VRRPv3.

If transition-mode is set to **true**, then the IPv4 transition mode is enabled and VRRPv2 and VRRPv3 advertisements are sent allowing VRRPv2 and VRRPv3 interoperability. Received VRRPv2 advertisement packets are accepted and processed when transition-mode is true.

If transition-mode is set to **false**, then the IPv4 transition mode is disabled and only VRRPv3 advertisements are sent. Received VRRPv2 advertisement packets are dropped.

Note the advertisement-interval should not be configured to less than 1 second when using transition-mode. VRRPv2 can only use advertisements in whole second intervals.

**Syntax** `transition-mode {true|false}`

| Parameter | Description |
|---|---|
| `true` | Transition mode is enabled. This results in VRRPv2 and VRRPv3 IPv4 advertisements being sent. Transition mode is only available on VRRPv3 for interoperability with VRRPv2 while upgrading to VRRPv3. |
| `false` | Transition mode is disabled. This stops VRRPv2 IPv4 advertisements being sent. Only VRRPv3 advertisements are sent when disabled. Disable transition-mode after upgrading from VRRPv2 to VRRPv3. |

**Default** The default is **false**.

**Mode** Router Configuration

**Usage notes** See the VRRP Feature Overview and Configuration Guide for more information:

- VRRPv3 IPv4 configuration details
- VRRPv3 IPv6 configuration details
- further information about configuring transition mode to upgrade from VRRPv2 to VRRPv3

**Examples** The example below shows you how to configure IPv4 transition-mode as true for VRRP VR ID 5 on vlan2:

```
awplus# configure terminal
awplus(config)# router vrrp 5 vlan2
awplus(config-router)# transition-mode true
```

The example below shows you how to configure IPv4 transition-mode as false for VRRP VR ID 5 on vlan2:

```
awplus# configure terminal
awplus(config)# router vrrp 5 vlan2
awplus(config-router)# transition-mode false
```

**Related commands**

router vrrp (interface)

# undebug vrrp

**Overview** Use this command to disable all VRRP debugging.

**Syntax**

```
undebug vrrp all
```

**Mode** Privileged Exec

**Example** The example below shows you how to disable all VRRP debugging:

```
awplus# undebug vrrp all
```

**Related commands** debug vrrp

# undebug vrrp events

**Overview** Use this command to disable debugging options for VRRP event troubleshooting.

**Syntax**

```
undebug vrrp events
```

**Mode** Privileged Exec

**Example** The example below shows you how to disable VRRP event debugging:

```
awplus# undebug vrrp events
```

**Related commands** debug vrrp events

# undebug vrrp packet

**Overview** Use this command to disable debugging options for VRRP packets.

**Syntax**

```
undebug vrrp packet [send|recv]
```

| Parameter | Description |
|---|---|
| send | Disable the debug option set for sent packets. |
| recv | Disable the debug option set for received packets. |

**Mode** Privileged Exec

**Examples** The example below shows you how to disable VRRP sent packet debugging:

```
awplus# undebug vrrp packet send
```

The example below shows you how to disable VRRP received packet debugging:

```
awplus# undebug vrrp packet recv
```

The example below shows you how to disable all VRRP packet debugging:

```
awplus# undebug vrrp packet
```

**Related commands** debug vrrp packet

# virtual-ip

**Overview** Use this command to set the virtual IP address for the VRRP session. This is the IP address of the virtual router that end hosts set as their default gateway.

Use the **no** variant of this command to disable this feature.

**Syntax**

```
virtual-ip <ip-address> [master|backup|owner]
no virtual-ip
```

| Parameter | Description |
|---|---|
| *<ip-address>* | The virtual IPv4 address of the virtual router, entered in dotted decimal format A.B.C.D. |
| master | Sets the default state of the VRRP router within the Virtual Router as **master**. For master, the router must own the Virtual IP address. Specify the **owner** option before using **master** option. |
| backup | Sets the default state of the VRRP router within the Virtual Router as **backup**. |
| owner | Sets the IPv6 address of the VRRP router within the Virtual Router as the **owner**. Specify this before using the **master** option. |

**Mode** Router Configuration

**Usage notes** The VRRP master and owner of the virtual IPv4 address for the VRRP session only responds to the packets destined to the virtual IPv6 address. The VRRP master that is not an owner of the virtual IPv4 address for the VRRP session does not respond to the packets destined to the virtual IPv4 address, but forwards packets with a VMAC as the destination address. See the vrrp vmac command to enable and disable this feature.

See the VRRP Feature Overview and Configuration Guide for more information about VRRPv3 IPv4 configuration details.

**Examples** The example below shows you how to set the virtual IP address for VRRP VR ID 5 and the router as the VRRP master:

```
awplus# configure terminal
awplus(config)# router vrrp 5 vlan2
awplus(config-router)# virtual-ip 192.0.2.30 master
```

The example below shows you how to set the virtual IPv4 address for VRRP VR ID 5 and the router as the VRRP backup:

```
awplus# configure terminal
awplus(config)# router vrrp 5 vlan2
awplus(config-router)# virtual-ip 192.0.2.30 backup
```

The example below shows you how to set the virtual IPv4 address for VRRP VR ID 5 and the router as owner of the virtual IPv4 address:

```
awplus# configure terminal
awplus(config)# router vrrp 5 vlan2
awplus(config-router)# virtual-ip 192.0.2.30 owner
```

The example below shows you how to disable the virtual IPv4 address for VRRP VR ID 5

```
awplus# configure terminal
awplus(config)# router vrrp 5 vlan2
awplus(config-router)# no virtual-ip
```

**Related commands**

router vrrp (interface)

enable (VRRP)

vrrp vmac

# virtual-ipv6

**Overview** Use this command to set the virtual IPv6 address for the VRRPv3 session. This is the IPv6 address of the virtual router that end hosts set as their default gateway.

Note that the primary IPv6 address specified is an IPv6 link-local address. See the Usage note below for further information.

Use the **no** variant of this command to disable this feature.

**Syntax**

```
virtual-ipv6 <ipv6-address> [master|backup]
[primary|secondary]
```

```
no virtual-ipv6
```

| Parameter | Description |
|---|---|
| `<ipv6-address>` | The IPv6 address of the virtual router, entered in hexadecimal, in the format X:X::X.X. |
| `master` | Sets **master** to be the default state of the VRRPv3 router within the Virtual Router. For **master**, we recommend using a Virtual IP address that is not owned by any of the VRRP routers in the same grouping (that share the same VRID). |
| `backup` | Sets **backup** to be the default state of the VRRPv3 router within the Virtual Router. |
| `primary` | Sets the specified address as the primary IPv6 address. The primary address must be a link-local IPv6 address. |
| `secondary` | Sets the specified address as the secondary IPv6 address. Normally this would be a globally-routable IPv6 address. This enables you to specify a globally-routable address as the default gateway address for all the hosts on a VLAN. |

**Mode** Router Configuration

**Usage notes** The virtual router will reply to ping, telnet, and SSH requests to the virtual IP address. The virtual router will reply even if it does not own the virtual IP address.

The AlliedWare Plus VRRPv3 implementation supports one IPv6 virtual link local address per virtual router ID. Note that in the command examples fe80::1 is an IPv6 link-local address. An IPv6 link-local address is used because IPv6 link-local addresses are used by IPv6 ND (Neighbor Discovery). A host's default route to a router points to the IPv6 link- local address, not a specific global IPv6 address for the router. For the host's traffic to switch over to a backup router, the IPv6 link-local address of the router is used by VRRPv3.

See the VRRP Feature Overview and Configuration Guide for more information about VRRPv3 IPv6 configuration details.

**Examples**

The example below shows you how to set the virtual IPv6 address for VRRPv3 VR ID 3 and the router as the VRRPv3 master:

```
awplus# configure terminal
awplus(config)# router ipv6 vrrp 3 vlan1
awplus(config-router)# virtual-ipv6 fe80::1 master
```

The example below shows you how to set the virtual IPv6 address for VRRPv3 VR ID 3 and the router as the VRRPv3 backup:

```
awplus# configure terminal
awplus(config)# router ipv6 vrrp 3 vlan1
awplus(config-router)# virtual-ipv6 fe80::1 backup
```

The example below shows you disable the virtual IPv6 address for VRRPv3 VR ID 3:

```
awplus# configure terminal
awplus(config)# router ipv6 vrrp 3 vlan1
awplus(config-router)# no virtual-ipv6
```

**Related commands**

router ipv6 vrrp (interface)

enable (VRRP)

vrrp vmac

# vrrp vmac

**Overview**

Use this command to enable or disable the VRRP Virtual MAC feature. This feature is used by VRRP to make the hosts use the virtual MAC address as the physical hardware address of their gateway.

A VRRP router master will use the virtual MAC address for any ARP responses associated with the virtual IP address, or any gratuitous ARPs sent on behalf of the virtual IP address.

All VRRP advertisements are sent using this virtual MAC address as the source MAC address.

The virtual MAC address has the form 00:00:5e:00:01:<VRID>, where VRID is the ID of the Virtual Router.

**Syntax**

```
vrrp vmac {enable|disable}
```

**Mode**

Global Configuration

**Examples**

To enable Virtual MAC enter:

```
awplus# configure terminal
awplus(config)# vrrp vmac enable
```

To disable Virtual MAC enter:

```
awplus# configure terminal
awplus(config)# vrrp vmac disable
```

**Related commands**

virtual-ip

virtual-ipv6

# Part 7: Network Management

# 51 Allied Telesis Management Framework™ (AMF) Commands

## Introduction

**Overview**

This chapter provides an alphabetical reference for Allied Telesis Management Framework™ (AMF) commands.

**AMF master nodes**

Every AMF network must have at least one master node, which acts as the core of the AMF network. Not all AlliedWare Plus devices are capable of acting as an AMF master. See the AMF Feature Overview and Configuration Guide for information about AMF master support.

**AMF edge**

AlliedWare Plus CentreCOM® Series switches can only be used as edge switches in an AMF network. The full management power and convenience of AMF is available on these switches, but they can only link to one other AMF node. They cannot form cross-links or virtual links.

**AMF naming convention**

When AMF is enabled on a device, it will automatically be assigned a host name. If a host name has already been assigned, by using the command hostname on page 277, this will remain. If however, no host name has been assigned, then the name applied will be the prefix, **host_** followed (without a space) by the MAC address of the device. For example, a device whose MAC address is **0016.76b1.7a5e** will have the name **host_0016_76b1_7a5e** assigned to it.

To efficiently manage your network using AMF, we strongly advise that you devise a naming convention for your network devices, and apply an appropriate hostname to each device in your AMF network.

**AMF and STP**

On AR-Series UTM firewalls and Secure VPN routers, you cannot use STP at the same time as AMF.

**Command List**


- "application-proxy ip-filter" on page 2388
- "application-proxy quarantine-vlan" on page 2389
- "application-proxy redirect-url" on page 2390
- "application-proxy threat-protection" on page 2391
- "application-proxy threat-protection send-summary" on page 2392

- "application-proxy whitelist advertised-address" on page 2393
- "application-proxy whitelist enable" on page 2394
- "application-proxy whitelist protection tls" on page 2395
- "application-proxy whitelist server" on page 2396
- "application-proxy whitelist trustpoint (deprecated)" on page 2398
- "area-link" on page 2399
- "atmf-arealink" on page 2401
- "atmf-link" on page 2403
- "atmf area" on page 2404
- "atmf area password" on page 2406
- "atmf authorize" on page 2408
- "atmf authorize provision" on page 2410
- "atmf backup" on page 2412
- "atmf backup area-masters delete" on page 2413
- "atmf backup area-masters enable" on page 2414
- "atmf backup area-masters now" on page 2415
- "atmf backup area-masters synchronize" on page 2416
- "atmf backup bandwidth" on page 2417
- "atmf backup delete" on page 2418
- "atmf backup enable" on page 2419
- "atmf backup guests delete" on page 2420
- "atmf backup guests enable" on page 2421
- "atmf backup guests now" on page 2422
- "atmf backup guests synchronize" on page 2423
- "atmf backup now" on page 2424
- "atmf backup redundancy enable" on page 2426
- "atmf backup server" on page 2427
- "atmf backup stop" on page 2429
- "atmf backup synchronize" on page 2430
- "atmf cleanup" on page 2431
- "atmf container" on page 2432
- "atmf container login" on page 2433
- "atmf controller" on page 2434
- "atmf distribute firmware" on page 2435
- "atmf domain vlan" on page 2437

- "atmf enable" on page 2440
- "atmf group (membership)" on page 2441
- "atmf guest-class" on page 2443
- "atmf log-verbose" on page 2445
- "atmf management subnet" on page 2446
- "atmf management vlan" on page 2449
- "atmf master" on page 2451
- "atmf mtu" on page 2452
- "atmf network-name" on page 2453
- "atmf provision (interface)" on page 2454
- "atmf provision node" on page 2455
- "atmf reboot-rolling" on page 2457
- "atmf recover" on page 2461
- "atmf recover guest" on page 2463
- "atmf recover led-off" on page 2464
- "atmf recover over-eth" on page 2465
- "atmf recovery-server" on page 2466
- "atmf remote-login" on page 2468
- "atmf restricted-login" on page 2470
- "atmf retry guest-link" on page 2472
- "atmf secure-mode" on page 2473
- "atmf secure-mode certificate expire" on page 2475
- "atmf secure-mode certificate expiry" on page 2476
- "atmf secure-mode certificate renew" on page 2477
- "atmf secure-mode enable-all" on page 2478
- "atmf select-area" on page 2480
- "atmf topology-gui enable" on page 2481
- "atmf trustpoint" on page 2482
- "atmf virtual-crosslink" on page 2484
- "atmf virtual-link" on page 2486
- "atmf virtual-link description" on page 2489
- "atmf virtual-link protection" on page 2490
- "atmf working-set" on page 2492
- "bridge-group" on page 2494
- "clear application-proxy threat-protection" on page 2495

- "clear atmf links" on page 2496
- "clear atmf links virtual" on page 2497
- "clear atmf links statistics" on page 2498
- "clear atmf recovery-file" on page 2499
- "clear atmf secure-mode certificates" on page 2500
- "clear atmf secure-mode statistics" on page 2501
- "clone (amf-provision)" on page 2502
- "configure boot config (amf-provision)" on page 2504
- "configure boot system (amf-provision)" on page 2506
- "copy (amf-provision)" on page 2508
- "create (amf-provision)" on page 2509
- "debug atmf" on page 2511
- "debug atmf packet" on page 2513
- "delete (amf-provision)" on page 2516
- "discovery" on page 2518
- "description (amf-container)" on page 2520
- "erase factory-default" on page 2521
- "http-enable" on page 2522
- "identity (amf-provision)" on page 2524
- "license-cert (amf-provision)" on page 2526
- "locate (amf-provision)" on page 2528
- "log event-host" on page 2530
- "login-fallback enable" on page 2531
- "modeltype" on page 2532
- "service atmf-application-proxy" on page 2533
- "show application-proxy threat-protection" on page 2534
- "show application-proxy whitelist advertised-address" on page 2536
- "show application-proxy whitelist interface" on page 2537
- "show application-proxy whitelist server" on page 2539
- "show application-proxy whitelist supplicant" on page 2540
- "show atmf" on page 2542
- "show atmf area" on page 2546
- "show atmf area guests" on page 2549
- "show atmf area guests-detail" on page 2551
- "show atmf area nodes" on page 2553

- "show atmf area nodes-detail" on page 2555
- "show atmf area summary" on page 2557
- "show atmf authorization" on page 2558
- "show atmf backup" on page 2561
- "show atmf backup area" on page 2565
- "show atmf backup guest" on page 2567
- "show atmf container" on page 2569
- "show atmf detail" on page 2572
- "show atmf group" on page 2574
- "show atmf group members" on page 2576
- "show atmf guests" on page 2578
- "show atmf guests detail" on page 2580
- "show atmf links" on page 2583
- "show atmf links detail" on page 2585
- "show atmf links guest" on page 2594
- "show atmf links guest detail" on page 2596
- "show atmf links statistics" on page 2600
- "show atmf nodes" on page 2603
- "show atmf provision nodes" on page 2605
- "show atmf recovery-file" on page 2607
- "show atmf secure-mode" on page 2608
- "show atmf secure-mode audit" on page 2610
- "show atmf secure-mode audit link" on page 2611
- "show atmf secure-mode certificates" on page 2612
- "show atmf secure-mode sa" on page 2615
- "show atmf secure-mode statistics" on page 2618
- "show atmf tech" on page 2620
- "show atmf virtual-links" on page 2623
- "show atmf working-set" on page 2625
- "show debugging atmf" on page 2626
- "show debugging atmf packet" on page 2627
- "show running-config atmf" on page 2628
- "state" on page 2629
- "switchport atmf-agentlink" on page 2631
- "switchport atmf-arealink" on page 2632

- "switchport atmf-crosslink" on page 2634
- "switchport atmf-guestlink" on page 2636
- "switchport atmf-link" on page 2638
- "type atmf node" on page 2639
- "undebug atmf" on page 2642
- "username" on page 2643

# application-proxy ip-filter

**Overview**

Use this command to enable global IP filtering on a device. Once enabled the device will add a global ACL in response to a threat message from an AMF Security (AMF-Sec) Controller.

Use the **no** variant of this command to disable global IP filtering.

**Syntax**

```
application-proxy ip-filter
no application-proxy ip-filter
```

**Default**

Global IP filtering is disabled by default.

**Mode**

Global Configuration

**Usage notes**

For this feature to work, the AMF Application Proxy service needs to be enabled on your network, using the command service atmf-application-proxy.

**Example**

To enable global IP filtering, use the commands:

```
awplus# configure terminal
awplus(config)# application-proxy ip-filter
```

To disable global IP filtering, use the commands:

```
awplus# configure terminal
awplus(config)# no application-proxy ip-filter
```

**Related commands**

application-proxy redirect-url

application-proxy threat-protection

clear application-proxy threat-protection

service atmf-application-proxy

show application-proxy threat-protection

**Command changes**

Version 5.4.7-2.5: command added

# application-proxy quarantine-vlan

**Overview**

Use this command to set the quarantine VLAN to use when an AMF Security (AMF-Sec) Controller detects a threat. The port/s on which the threat is detected are moved to this VLAN if the application-proxy threat-protection action is set to **quarantine**.

Use the **no** variant of this command to delete the quarantine VLAN. If no quarantine VLAN is specified then no quarantine action will be performed.

**Syntax**

```
application-proxy quarantine-vlan <vlan-id>
no application-proxy quarantine-vlan
```

| Parameter | Description |
|---|---|
| *<vlan-id>* | The ID of the VLAN to use. In the range 1-4094. |

**Default**

By default, no quarantine VLAN is configured.

**Mode**

Global Configuration

**Example**

To configure VLAN 100 as the quarantine VLAN, use the commands:

```
awplus# configure terminal
awplus(config)# application-proxy quarantine-vlan 100
```

To delete the quarantine VLAN, use the commands:

```
awplus# configure terminal
awplus(config)# no application-proxy quarantine-vlan
```

**Related commands**

application-proxy threat-protection

clear application-proxy threat-protection

application-proxy threat-protection send-summary

service atmf-application-proxy

show application-proxy threat-protection

**Command changes**

Version 5.4.7-2.2: command added

# application-proxy redirect-url

**Overview**

Use this command to redirect a user to a helpful URL when they are blocked because of an application-proxy ip-filter.

Use the **no** variant of this command to remove the URL redirect.

**Syntax**

```
application-proxy redirect-url <url>
no application-proxy redirect-url
```

| Parameter | Description |
|---|---|
| *<url>* | URL to redirect the user to. |

**Default**

No URL is configured by default.

**Mode**

Global Configuration

**Example**

To configure a redirect URL, use the command:

```
awplus# application-proxy redirect-url http://my.dom/help.html
```

To remove a redirect URL, use the command:

```
awplus# no application-proxy redirect-url
```

**Related commands**

application-proxy ip-filter

application-proxy threat-protection

clear application-proxy threat-protection

service atmf-application-proxy

show application-proxy threat-protection

**Command changes**

Version 5.4.9-0.1: command added

# application-proxy threat-protection

**Overview**

Use this command to set the blocking action to take when a threat detected message is received from an AMF Security (AMF-Sec) Controller.

Use the **no** variant of this command to disable threat protection blocking actions on the port.

**Syntax**

```
application-proxy threat-protection {drop|link-down|
quarantine|log-only}
```

```
no application-proxy threat-protection
```

| Parameter | Description |
|---|---|
| `drop` | Apply a Layer 2 drop for traffic generating the threat reports. |
| `link-down` | Set the link to error disabled in response to threats. |
| `quarantine` | Move the offending port to a quarantine VLAN. |
| `log-only` | Log when a threat is detected. |

**Default**

Threat protection is disabled by default.

**Mode**

Interface Configuration

**Example**

To set the threat protection blocking action on port1.0.4 to drop, use the commands:

```
awplus# configure terminal
awplus(config)# interface port1.0.4
awplus(config-if)# application-proxy threat-protection drop
```

To disable threat protection blocking actions on port1.0.4, use the commands:

```
awplus# configure terminal
awplus(config)# interface port1.0.4
awplus(config-if)# no application-proxy threat-protection
```

**Related commands**

application-proxy quarantine-vlan

application-proxy threat-protection send-summary

clear application-proxy threat-protection

service atmf-application-proxy

show application-proxy threat-protection

**Command changes**

Version 5.4.7-2.2: command added

Version 5.4.9-0.1: **log-only** parameter added

# application-proxy threat-protection send-summary

**Overview**

Use this command to send a summary of all current threat-protection blocking requests to all AMF Application Proxy service nodes. This command can only be performed on an AMF master.

**Syntax**

```
application-proxy threat-protection send-summary
```

**Mode**

Privileged Exec

**Example**

To send a summary of all current threat-protection blocking requests to all AMF Application Proxy service nodes, use the command:

```
awplus# application-proxy threat-protection send-summary
```

**Related commands**

application-proxy quarantine-vlan

application-proxy threat-protection

clear application-proxy threat-protection

service atmf-application-proxy

show application-proxy threat-protection

**Command changes**

Version 5.4.7-2.2: command added

# application-proxy whitelist advertised-address

**Overview**

Use this command to register a Layer 3 interface, and the IPv4 address that is attached to this interface, as the advertised application-proxy whitelist address for a device.

Use the **no** variant of this command to stop advertising the Layer 3 interface and its associated IPv4 address.

**Syntax**

```
application-proxy whitelist advertised-address <interface>
no application-proxy whitelist advertised-address
```

| Parameter | Description |
|---|---|
| *<interface>* | Layer 3 interface to configure as the advertised address. |

**Default**

No address advertised by default.

**Mode**

Global Configuration

**Example**

To configure the IPv4 address attached to VLAN 1as the advertised address, use the commands:

```
awplus# configure terminal
awplus(config)# application-proxy whitelist advertised-address
vlan1
```

To remove the advertised address, use the commands:

```
awplus# configure terminal
awplus(config)# no application-proxy whitelist
advertised-address
```

**Related commands**

application-proxy whitelist server

show application-proxy whitelist advertised-address

**Command changes**

Version 5.4.9-1.1: command added

# application-proxy whitelist enable

**Overview**

Use this command to enable application-proxy whitelist based authentication on an interface.

Use the **no** variant of this command to disable the whitelist authentication.

**Syntax**

```
application-proxy whitelist enable
no application-proxy whitelist enable
```

**Default**

Application-proxy whitelist is disabled by default.

**Mode**

Interface Configuration

**Usage notes**

When **port-control** is set to **auto**, the 802.1X authentication feature is executed on the interface, but only if the **aaa authentication dot1x** command has been issued.

If you attempt to change the authentication configuration on an interface that has threat protection quarantine configured, you will see the following error message:

```
% portx.x.x: Application Proxy quarantine configuration must be
removed before port authentication is changed
```

Before changing the interface's authentication configuration you must either:

- remove the interface's threat protection configuration, or
- shut down the interface.

**Example**

To enable application-proxy whitelist authentication on the interface port1.0.4, use the commands:

```
awplus# configure terminal
awplus(config)# interface port1.0.4
awplus(config-if)# application-proxy whitelist enable
```

To disable application-proxy whitelist authentication on the interface port1.0.4, use the commands:

```
awplus# configure terminal
awplus(config)# interface port1.0.4
awplus(config-if)# no application-proxy whitelist enable
```

**Related commands**

application-proxy whitelist server

show application-proxy whitelist interface

show application-proxy whitelist server

show application-proxy whitelist supplicant

**Command changes**

Version 5.4.9-0.1: command added

# application-proxy whitelist protection tls

**Overview**

Use this command to configure the application-proxy whitelist control channel to use TLS protection. If no trustpoint is specified then TLS will operate without authentication.

Use the **no** variant of this command to stop using TLS.

**Syntax**

```
application-proxy whitelist protection tls [trustpoint <name>]
no application-proxy whitelist protection tls
```

| Parameter | Description |
|---|---|
| `trustpoint` | Specify an optional trustpoint. If no trustpoint is specified then TLS will operate without authentication. |
| *<name>* | Name of the trustpoint. |

**Default**

TLS is disabled by default.

**Mode**

Global Configuration

**Example**

To configure an AMF application-proxy whitelist to use TLS with the trustpoint 'corpca', use the commands:

```
awplus# configure terminal
awplus(config)# application-proxy whitelist protection tls
trustpoint corpca
```

To configure an AMF application-proxy whitelist to stop using TLS, use the commands:

```
awplus# configure terminal
awplus(config)# no application-proxy whitelist protection tls
```

**Related commands**

application-proxy whitelist enable

application-proxy whitelist server

show application-proxy whitelist server

**Command changes**

Version 5.5.0-2.1: command added

# application-proxy whitelist server

**Overview** Use this command to set an AMF master to act as a whitelist authentication proxy between AMF members, acting as Network Access Servers, and an external whitelist RADIUS server.

Use the **no** variant of this command to disable the whitelist proxy functionality.

**Syntax**

```
application-proxy whitelist server <ip-address> key <key>
[auth-port <1-65535>]
```

```
no application-proxy whitelist server
```

| Parameter | Description |
|---|---|
| `<ip-address>` | IPv4 address of the upstream RADIUS server in dotted decimal format A.B.C.D. |
| `key <key>` | Set the shared secret encryption key for communication with the upstream RADIUS server. |
| `auth-port <1-65535>` | Set the RADIUS server UDP port. This is only necessary if you don't want to use the default port 1812. |

**Default** Disabled by default.

**Mode** Global Configuration

**Example** To configure an AMF master to work as a proxy to the external RADIUS server 192.168.1.10, with shared secret 'mysecurekey', on port 1822, use the commands:

```
awplus# configure terminal
awplus(config)# application-proxy whitelist server 192.168.1.10
key mysecurekey auth-port 1822
```

To configure an AMF master to work as a proxy to the external RADIUS server 192.168.1.10, with shared secret 'mysecurekey', on the default port (1812), use the commands:

```
awplus# configure terminal
awplus(config)# application-proxy whitelist server 192.168.1.10
key mysecurekey
```

To disable the whitelist proxy, use the commands:

```
awplus# configure terminal
awplus(config)# no application-proxy whitelist server
```

**Related commands**

application-proxy whitelist enable

service atmf-application-proxy

show application-proxy whitelist interface

show application-proxy whitelist server

show application-proxy whitelist supplicant

**Command changes**

Version 5.4.9-0.1: command added

# application-proxy whitelist trustpoint (deprecated)

**Overview**

This command has been deprecated. It has been replaced by the application-proxy whitelist protection tls command.

This command sets the trustpoint to use when communicating with the external whitelist RADIUS server. This enables RADIUS over TLS (RadSec) protection.

**Syntax**

```
application-proxy whitelist trustpoint <name>
no application-proxy whitelist trustpoint
```

**Command changes**

Version 5.4.9-1.1: command added

Version 5.5.0-2.1: command deprecated

# area-link

**Overview** Use this command to create an area-link between a Virtual AMF Appliance (VAA) host controller and an AMF container.

An AMF container is an isolated instance of AlliedWare Plus with its own network interfaces, configuration, and file system. The features available inside an AMF container are a sub-set of the features available on the host VAA. These features enable the AMF container to function as a uniquely identifiable AMF master and allows for multiple tenants (up to 60) to run on a single VAA host. See the AMF Feature Overview and Configuration Guide for more information on running multiple tenants on a single VAA host.

Use the **no** variant of this command to remove an area-link from a container.

**Syntax**

```
area-link <area-name>
no area-link
```

| Parameter | Description |
|---|---|
| *<area-name>* | AMF area name of the container's area. |

**Mode** AMF Container Configuration

**Usage notes** The AMF area-link connects the AMF controller on a VAA host to the AMF container. Once a container has been created with the atmf container command and an area-link configured with the **area-link** command, it can be enabled using the state command.

You can only configure a single area-link on a container. You will see the following message if you try and configure a second one:

```
% AreaLink already configured for this container
```

Each container has two virtual interfaces:

- Interface eth0, used to connect to the AMF controller on the VAA host via an AMF area-link, configured using this area-link command.
- Interface eth1, used to connect to the outside world using a bridged L2 network link, configured using the bridge-group command.

See the AMF Feature Overview and Configuration_Guide for more information on these virtual interfaces and links.

**Example** To create the area-link to "wlg" on container "vac-wlg-1", use the commands:

```
awplus# configure terminal
awplus(config)# atmf container vac-wlg-1
awplus(config-atmf-container)# area-link wlg
```

To remove an area-link from container "vac-wlg-1", use the commands:

```
awplus# configure terminal
awplus(config)# atmf container vac-wlg-1
awplus(config-atmf-container)# no area-link
```

**Related commands**

atmf container

show atmf container

**Command changes**

Version 5.4.7-0.1: command added

# atmf-arealink

**Overview** This command to enable an Eth interface, on an AR-series device, as an AMF area link. AMF area links are designed to operate between two nodes in different areas in an AMF network. This command is only available if your network is running in AMF secure mode (see atmf secure-mode for more information on AMF secure mode).

Use the **no** variant of this command to remove any AMF area links that may exist for the selected Eth interface.

**Syntax**

```
atmf-arealink remote-area <area-name> vlan <2-4094>
no atmf-arealink
```

| Parameter | Description |
|---|---|
| *<area-name>* | The name of the remote area that the interface is connecting to. |
| *<2-4094>* | The VLAN ID for the link. This VLAN cannot be used for any other purpose, and the same VLAN ID must be used at each end of the link. |

**Default** By default, no area links are configured

**Mode** Eth interface on an AR-series device.

**Usage notes** Run this command on the interface at both ends of the link.

Each area must have the area-name configured, and the same area password must exist on both ends of the link.

Running this command will synchronize the area information stored on the two nodes.

You can configure multiple area links between two area nodes, but only one area link at any time will be in use. All other area links will block information, to prevent network storms.

***NOTE:*** *See the switchport atmf-arealink command to configure an AMF area link on an a switch port or link aggregator*

**Example** To configure eth1 as an AMF area link to the 'Auckland' area on VLAN 6, use the following commands:

```
master_1# configure terminal
master_1(config)# interface eth1
master_1(config-if)# atmf-arealink remote-area Auckland vlan 6
```

To remove eth1 as an AMF area link, use the following commands:

```
master_1# configure terminal
master_1(config)# interface eth1
master_1(config-if)# no atmf-arealink
```

**Related commands**

atmf area

atmf area password

atmf virtual-link

show atmf links

**Command changes**

Version 5.5.0-1.1: command added

# atmf-link

**Overview**

Use this command to enable an Eth interface on an AR-series device as an up/down AMF link. This command is only available if your network is running in AMF secure mode (see atmf secure-mode for more information on AMF secure mode).

Use the **no** variant of this command to remove any AMF link that may exist for the selected Eth interface.

**Syntax**

```
atmf-link
no atmf-link
```

**Mode**

Eth interface on an AR-series device.

**Usage notes**

Up/down links and virtual links interconnect domains in a vertical hierarchy, with the highest domain being the core domain. In effect, they form a tree of interconnected AMF domains. This tree must be loop-free. Therefore you must configure your up/down and virtual links so that no loops are formed.

If you run the command and AMF secure mode is not enabled, you will see the following error message:

```
Node_1(config)#int eth1
Node_1(config-if)#atmf-link
% Cannot configure eth1 because atmf secure-mode is not enabled.
```

***NOTE:*** *See the switchport atmf-link command to configure an AMF up/down link on an a switch port or link aggregator*

**Example**

To configure eth1 as an AMF up/down link, use the following commands:

```
Node_1# configure terminal
Node_1(config)# interface eth1
Node_1(config-if)# atmf-link
```

To remove eth1 as an AMF up/down link, use the following commands:

```
Node_1# configure terminal
Node_1(config)# interface eth1
Node_1(config-if)# no atmf-link
```

**Related commands**

atmf recover over-eth

atmf secure-mode

show atmf detail

show atmf links

switchport atmf-link

**Command changes**

Version 5.5.0-1.1: command added

# atmf area

**Overview** This command creates an AMF area and gives it a name and ID number.

Use the **no** variant of this command to remove the AMF area.

This command is only valid on AMF controllers, master nodes and gateway nodes.

**Syntax**

```
atmf area <area-name> id <1-126> [local]
no atmf area <area-name>
```

| Parameter | Description |
|---|---|
| *<area-name>* | The AMF area name. The area name can be up to 15 characters long. Valid characters are:<br>a..z<br>A..Z<br>0..9<br>-<br>_<br>Names are case sensitive and must be unique within an AMF network. The name cannot be the word "local" or an abbreviation of the word "local" (such as "l", "lo" etc.). |
| *<1-126>* | An ID number that uniquely identifies this area. |
| `local` | Set the area to be the local area. The local area contains the device you are configuring. |

**Mode** Global Configuration

**Usage notes** This command enables you to divide your AMF network into areas. Each area is managed by at least one AMF master node. Each area can have up to 120 nodes, depending on the license installed on that area's master node.

The whole AMF network is managed by up to 8 AMF controllers. Each AMF controller can communicate with multiple areas. The number of areas supported on a controller depends on the license installed on that controller.

You must give each area in an AMF network a unique name and ID number.

Only one local area can be configured on a device. You must specify a local area on each controller, remote AMF master, and gateway node.

**Example** To create the AMF area named *New-Zealand*, with an ID of 1, and specify that it is the local area, use the command:

```
controller-1(config)# atmf area New-Zealand id 1 local
```

To configure a remote area named *Auckland*, with an ID of 100, use the command:

```
controller-1(config)# atmf area Auckland id 100
```

**Related commands**

atmf area password

show atmf area

show atmf area summary

show atmf area nodes

switchport atmf-arealink

# atmf area password

**Overview** This command sets a password on an AMF area.

Use the **no** variant of this command to remove the password.

This command is only valid on AMF controllers, master nodes and gateway nodes. The area name must have been configured first.

**Syntax**

```
atmf area <area-name> password [8] <password>
no atmf area <area-name> password
```

| Parameter | Description |
|---|---|
| *<area-name>* | The AMF area name. |
| 8 | This parameter is displayed in **show running-config** output to indicate that it is displaying the password in encrypted form. You should not enter **8** on the CLI yourself. |
| *<password>* | The password is between 8 and 32 characters long. It can include spaces. |

**Mode** Global Configuration

**Usage notes** You must configure a password on each area that an AMF controller communicates with, except for the controller's local area. The areas must already have been created using the atmf area command.

Enter the password identically on both of:

- the area that locally contains the controller, and
- the remote AMF area masters

The command **show running-config atmf** will display the encrypted version of this password. The encryption keys will match between the controller and the remote AMF master.

If multiple controller and masters exist in an area, they must all have the same area configuration.

**Example** To give the AMF area named *Auckland* a password of "secure#1" use the following command on the controller:

```
controller-1(config)# atmf area Auckland password secure#1
```

and also use the following command on the master node for the Auckland area:

```
auck-master(config)# atmf area Auckland password secure#1
```

**Related commands**

atmf area

show atmf area

show atmf area summary

show atmf area nodes

switchport atmf-arealink

# atmf authorize

**Overview**

On an AMF network, with secure mode enabled, use this command on an AMF master to authorize an AMF node to join the network. AMF nodes waiting to be authorized appear in the pending authorization queue, which can be examined using the show atmf authorization command with the **pending** parameter.

Use the **no** variant of this command to revoke authorization for an AMF node on an AMF master.

**Syntax**

```
atmf authorize {<node-name> [area <area-name>]|all-pending}
no atmf authorize <node-name> [area <area-name>]
```

| Parameter | Description |
|---|---|
| *<node-name>* | The name of the node to be authorized or have its authorization revoked. |
| `area` | Specify an AMF area. |
| *<area-name>* | This is the name of the area the node belongs to. |
| `all-pending` | Authorize all nodes in the pending queue. |

**Mode**

Privileged Exec

**Usage notes**

On an AMF controller, AMF remote-area masters must be authorized by the controller, and the AMF remote-area masters will also need to authorized access from the AMF controller.

**Example**

To authorize all AMF nodes in the pending authorization queue on an AMF master, use the command:

```
awplus# atmf authorize all-pending
```

To authorize a node called “node2” in remote AMF area “area3”, use the command:

```
awplus# atmf authorize node2 area “area3”
```

To authorize a node called “node4” on an AMF master, use the command:

```
awplus# atmf authorize node4
```

To revoke authorization for a node called “node4” on an AMF master, use the command:

```
awplus# no atmf authorize node4
```

**Related commands**

atmf secure-mode

clear atmf secure-mode certificates

show atmf authorization

show atmf secure-mode

show atmf secure-mode certificates

show atmf secure-mode statistics

**Command changes**

Version 5.4.7-0.3: command added

# atmf authorize provision

**Overview** Use this command from an AMF controller or AMF master to pre-authorize a node on an AMF network running in secure mode. This allows a node to join the AMF network the moment the atmf secure-mode command is run on that node.

Use the **no** variant of this command to remove a provisional authorization from and AMF controller or AMF master.

**Syntax**

```
atmf authorize provision [timeout <minutes>] node <node-name>
interface <interface-name> [area <area-name>]
atmf authorize provision [timeout <minutes>] mac <mac-address>
atmf authorize provision [timeout <minutes>] all
no atmf authorize provision node <node-name> interface
<interface-name> [area <area-name>]
no atmf authorize provision mac <mac-address>
no atmf authorize provision all
```

| Parameter | Description |
|---|---|
| `timeout` | Timeout for provisional authorization. Authorization for provisioned nodes expires after the timeout period specified. |
| `<minutes>` | Timeout in minutes. A value between 1 and 6000 is permissible with the default being 60 minutes. |
| `node` | Specify a node to provision by node name. |
| `<node-name>` | The name of the node to provisionally authorize. |
| `interface` | Specify the interface the node will connect on. |
| `<interface-name>` | The name of the interface, this can be a switchport, link aggregator, LACP link, or virtual link. |
| `area` | Specify the AMF area. |
| `<area-name>` | This is the name of the area the node belongs to. |
| `mac` | Specify a node to provision by MAC address. |
| `<mac-address>` | Enter a MAC address to provisionally authorize in the format HHHH.HHHH.HHHH. |
| `all` | Provision authorization for all secure mode capable nodes. |

**Default** The default timeout is 60 minutes.

**Mode** Privileged Exec

**Example** To provisionally authorize all non-secure AMF nodes, use the command:

```
awplus# atmf authorize provision all
```

To authorize a node with a MAC address of 0000.cd28.0880 for 2 hours, use the command:

```
awplus# authorize provision timeout 120 mac 0000.cd28.0880
```

To remove all provisional authorization, on an AMF master, use the command:

```
awplus# no atmf authorize provision all
```

**Related commands**

show atmf authorization

show atmf secure-mode

**Command changes**

Version 5.4.7-0.3: command added

# atmf backup

**Overview** This command can only be applied to a master node. It manually schedules an AMF backup to start at a specified time and to execute a specified number of times per day.

Use the **no** variant of this command to disable the schedule.

**Syntax**

```
atmf backup {default|<hh:mm> frequency <1-24>}
```

| Parameter | Description |
|---|---|
| `default` | Restore the default backup schedule. |
| `<hh:mm>` | Sets the time of day to apply the first backup, in hours and minutes. Note that this parameter uses the 24 hour clock. |
| `backup` | Enables AMF backup to external media. |
| `frequency <1-24>` | Sets the number of times within a 24 hour period that backups will be taken. |

**Default** Backups run daily at 03:00 AM, by default

**Mode** Global Configuration

**Usage notes** Running this command only configures the schedule. To enable the schedule, you should then apply the command atmf backup enable.

We recommend using the ext3 or ext4 filesystem on external media that are used for AMF backups.

**Example** To schedule backup requests to begin at 11 am and execute twice per day (11 am and 11 pm), use the following command:

```
node_1# configure terminal
node_1(config)# atmf backup 11:00 frequency 2
```

***CAUTION:*** *File names that comprise identical text, but with differing case, such as Test.txt and test.txt, will not be recognized as being different on FAT32 based backup media such as a USB storage device. However, these filenames will be recognized as being different on your Linux based device. Therefore, for good practice, ensure that you apply a consistent case structure for your back-up file names.*

**Related commands**

atmf backup enable

atmf backup stop

show atmf backup

# atmf backup area-masters delete

**Overview** Use this command to delete from external media, a backup of a specified node in a specified area.

Note that this command can only be run on an AMF controller.

**Syntax**

```
atmf backup area-masters delete area <area-name> node
<node-name>
```

| Parameter | Description |
|---|---|
| *<area-name>* | The area that contains the node whose backup will be deleted. |
| *<node-name>* | The node whose backup will be deleted. |

**Mode** Privileged Exec

**Example** To delete the backup of the remote area-master named “well-gate” in the AMF area named Wellington, use the command:

```
controller-1# atmf backup area-masters delete area Wellington
node well-gate
```

**Related commands** show atmf backup area

# atmf backup area-masters enable

**Overview**

Use this command to enable backup of remote area-masters from the AMF controller. This command is only valid on AMF controllers.

Use the **no** form of the command to stop backups of remote area-masters.

**Syntax**

```
atmf backup area-masters enable
no atmf backup area-masters enable
```

**Mode**

Global configuration

**Default**

Remote area backups are disabled by default

**Usage notes**

Use the following commands to configure the remote area-master backups:

- atmf backup to configure when the backups begin and how often they run
- atmf backup server to configure the backup server.

We recommend using the ext3 or ext4 filesystem on external media that are used for AMF backups.

**Example**

To enable scheduled backups of AMF remote area-masters, use the commands:

```
controller-1# configure terminal
controller-1(config)# atmf backup area-masters enable
```

To disable scheduled backups of AMF remote area-masters, use the commands:

```
controller-1# configure terminal
controller-1(config)# no atmf backup area-masters enable
```

**Related commands**

atmf backup server

atmf backup

show atmf backup area

# atmf backup area-masters now

**Overview**

Use this command to run an AMF backup of one or more remote area-masters from the AMF controller immediately.

This command is only valid on AMF controllers.

**Syntax**

`atmf backup area-masters now [area <area-name>|area <area-name> node <node-name>]`

| Parameter | Description |
|---|---|
| `<area-name>` | The area whose area-masters will be backed up. |
| `<node-name>` | The node that will be backed up. |

**Mode**

Privileged Exec

**Example**

To back up all local master nodes in all areas controlled by controller-1, use the command

```
controller-1# atmf backup area-masters now
```

To back up all local masters in the AMF area named Wellington, use the command

```
controller-1# atmf backup area-masters now area Wellington
```

To back up the local master “well-master” in the Wellington area, use the command

```
controller-1# atmf backup area-masters now area Wellington node well-master
```

**Related commands**

atmf backup area-masters enable

atmf backup area-masters synchronize

show atmf backup area

# atmf backup area-masters synchronize

**Overview**

Use this command to synchronize backed-up area-master files between the active remote file server and the backup remote file server. Files are copied from the active server to the remote server.

Note that this command is only valid on AMF controllers.

**Syntax**

```
atmf backup area-masters synchronize
```

**Mode**

Privileged Exec

**Example**

To synchronize backed-up files between the remote file servers for all area-masters, use the command:

```
controller-1# atmf backup area-masters synchronize
```

**Related commands**

atmf backup area-masters enable

atmf backup area-masters now

show atmf backup area

# atmf backup bandwidth

**Overview**

This command sets the maximum bandwidth in kilobytes per second (kBps) available to the AMF backup process. This command enables you to restrict the bandwidth that is utilized for downloading file contents during a backup.

***NOTE:*** *This command will only run on an AMF master. An error message will be generated if the command is attempted on node that is not a master.*

*Also note that setting the bandwidth value to zero will allow the transmission of as much bandwidth as is available, which can exceed the maximum configurable speed of 1000 kBps. In effect, zero means unlimited.*

Use the **no** variant of this command to reset (to its default value of zero) the maximum bandwidth in kilobytes per second (kBps) available when initiating an AMF backup. A value of zero tells the backup process to transfer files using unlimited bandwidth.

**Syntax**

```
atmf backup bandwidth <0-1000>
no atmf backup bandwidth
```

| Parameter | Description |
|---|---|
| *<0-1000>* | Sets the bandwidth in kilobytes per second (kBps) |

**Default**

The default value is zero, allowing unlimited bandwidth when executing an AMF backup.

**Mode**

Global Configuration

**Examples**

To set an atmf backup bandwidth of 750 kBps, use the commands:

```
node2# configure terminal
node2(config)# atmf backup bandwidth 750
```

To set the AMF backup bandwidth to the default value for unlimited bandwidth, use the commands:

```
node2# configure terminal
node2(config)# no atmf backup bandwidth
```

**Related commands**

show atmf backup

# atmf backup delete

**Overview** This command removes the backup file from the external media of a specified AMF node.

Note that this command can only be run from an AMF master node.

**Syntax**

```
atmf backup delete <node-name>
```

| Parameter | Description |
|---|---|
| *<node-name>* | The AMF node name of the backup file to be deleted. |

**Mode** Privileged Exec

**Example** To delete the backup file from node2, use the following command:

```
Node_1# atmf backup delete node2
```

**Related commands**

show atmf backup

atmf backup now

atmf backup stop

# atmf backup enable

**Overview**

This command enables automatic AMF backups on the AMF master node that you are connected to. By default, automatic backup starts at 3:00 AM. However, this schedule can be changed by the atmf backup command. Note that backups are initiated and stored only on the master nodes.

Use the **no** variant of this command to disable any AMF backups that have been scheduled and previously enabled.

**Syntax**

```
atmf backup enable
no atmf backup enable
```

**Default**

Automatic AMF backup functionality is enabled on the AMF master when it is configured and external media, i.e. an SD card or a USB storage device or remote server, is detected.

**Mode**

Global Configuration

**Usage notes**

A warning message will appear if you run the atmf backup enable command with either insufficient or marginal memory availability on your external storage device.

You can use the command show atmf backup on page 2561 to check the amount of space available on your external storage device.

We recommend using the ext3 or ext4 filesystem on external media that are used for AMF backups.

**Example**

To turn on automatic AMF backup, use the following command:

```
AMF_Master_1# configure terminal
AMF_Master_1(config)# atmf backup enable
```

**Related commands**

show atmf

show atmf backup

atmf backup

atmf backup now

atmf enable

# atmf backup guests delete

**Overview** This command removes a guest node's backup files from external media such as a USB drive, SD card, or an external file server.

**Syntax**

```
atmf backup guests delete <node-name> <guest-port>
```

| Parameter | Description |
|---|---|
| *<node-name>* | The name of the guest's parent node. |
| *<guest-port>* | The port number on the parent node. |

**Mode** User Exec/Privileged Exec

**Example** On a parent node named "node1" (which, in this case, the user has a direct console connection to) use the following command to remove the backup files of the guest node that is directly connected to port1.0.3.

```
node1# atmf backup guests delete node1 port1.0.3
```

**Related Command**

atmf backup delete

atmf backup area-masters delete

show atmf backup guest

# atmf backup guests enable

**Overview**

Use this command to enable backups of remote guest nodes from an AMF master.

Use the **no** variant of this command to disable the ability of the guest nodes to be backed up.

**Syntax**

```
atmf backup guests enable
no atmf backup guests enable
```

**Default**

Guest node backups are enabled by default.

**Mode**

Global Config

**Usage notes**

We recommend using the ext3 or ext4 filesystem on external media that are used for AMF backups.

**Example**

On the AMF master node, enable all scheduled guest node backups:

```
atmf-master# configure terminal
atmf-master(config)# atmf backup guests enable
```

**Related commands**

atmf backup area-masters enable

show atmf backup guest

atmf backup guests synchronize

# atmf backup guests now

**Overview** This command manually triggers an AMF backup of guest nodes on a AMF Master.

**Syntax** `atmf backup guests now [<node-name>] [<guest-port>]`

| Parameter | Description |
|---|---|
| *<node-name>* | The name of the guest's parent node. |
| *<guest-port>* | The port number that connects to the guest node. |

**Default** n/a

**Mode** Privileged Exec

**Example** Use the following command to manually trigger the backup of all guests in the AMF network

```
awplus# atmf backup guests now
```

**Example** To manually trigger the backup of a guest node connected to port 1.0.23 of node1, use the following command:

```
awplus# atmf backup guests now node1 port1.0.23
```

**Related commands** show atmf backup guest

# atmf backup guests synchronize

**Overview** This command initiates a manual synchronization of all guest backup file-sets across remote file servers and various redundancy backup media, such as USB storage devices. This facility ensures that each device contains the same backup image files. Note that this backup synchronization process will occur as part of the regular backups scheduled by the atmf backup command.

**Syntax**

```
atmf backup guests synchronize
```

**Default** n/a

**Mode** User Exec/Privileged Exec

**Example** To synchronize backups across remote file servers and storage devices, use the command:

```
Node1#atmf backup guests synchronize
```

**Related commands**

atmf backup redundancy enable

show atmf guests

atmf backup guests enable

# atmf backup now

**Overview** This command initiates an immediate AMF backup of either all AMF members, or a selected AMF member. Note that this backup information is stored in the external media on the master node of the device on which this command is run, even though the selected AMF member may not be a master node.

Note that this command can only be run on an AMF master node.

**Syntax**

```
atmf backup now [<nodename>]
```

| Parameter | Description |
|---|---|
| `<nodename>` or `<hostname>` | The name of the AMF member to be backed up, as set by the command hostname on page 277. Where no name has been assigned to this device, then you must use the default name, which is the word "host", then an underscore, then (without a space) the MAC address of the device to be backed up. For example host_0016_76b1_7a5e. Note that the node-name appears as the command Prompt when in Privileged Exec mode. |

**Default** A backup is initiated for all nodes on the AMF (but stored on the master nodes).

**Mode** Privileged Exec

**Usage notes** Although this command will select the AMF node to be backed-up, it can only be run from any AMF master node.

***NOTE:*** *The backup produced will be for the selected node but the backed-up config will reside on the external media of the AMF master node on which the command was run. However, this process will result in the information on one master being more up-to-date. To maintain concurrent backups on both masters, you can apply the backup now command to the master working-set. This is shown in Example 4 below.*

**Example 1** In this example, an AMF member has not been assigned a host name. The following command is run on the AMF_Master_2 node to immediately backup the device that is identified by its MAC address of 0016.76b1.7a5e:

```
AMF_Master_2# atmf backup now host_0016_76b1_7a5e
```

***NOTE:*** *When a host name is derived from its MAC address, the syntax format entered changes from XXXX.XXXX.XXXX to XXXX_XXXX_XXXX.*

**Example 2** In this example, an AMF member has the host name, **office_annex**. The following command will immediately backup this device:

```
AMF_Master_2# atmf backup now office_annex
```

This command is initiated on the device's master node named **AMF_Master_2** and initiates an immediate backup on the device named **office_annex**.

**Example 3** To initiate from AMF_master_1 an immediate backup of all AMF member nodes, use the following command:

```
AMF_Master_1# amf backup now
```

**Example 4** To initiate an immediate backup of the node with the host-name "office_annex" and store the configuration on both masters, use the following process:

From the AMF_master_1, set the working-set to comprise only of the automatic group, master nodes.

```
AMF_Master_1# atmf working-set group master
```

This command returns the following display:

```
============================
AMF_Master_1, AMF_Master_2
==============================

Working set join
```

Backup the AMF member with the host name, **office_annex** on both the master nodes as defined by the working set.

```
AMF_Master[2]# atmf backup now office_annex
```

Note that the [2] shown in the command prompt indicates a 2 node working-set.

**Related commands**

atmf backup

atmf backup stop

hostname

show atmf backup

# atmf backup redundancy enable

**Overview** This command is used to enable or disable AMF backup redundancy.

**Syntax**

```
atmf backup redundancy enable
no atmf backup redundancy enable
```

**Default** Disabled

**Mode** Global Configuration

**Usage notes** If the AMF Master or Controller supports any removable media (SD card/USB), it uses the removable media as the redundant backup for the AMF data backup.

This feature is valid only if remote file servers are configured on the AMF Master or Controller.

We recommend using the ext3 or ext4 filesystem on external media that are used for AMF backups.

**Example** To enable AMF backup redundancy, use the commands:

```
awplus# configure terminal
awplus(config)# atmf backup redundancy enable
```

To disable AMF backup redundancy, use the commands:

```
awplus# configure terminal
awplus(config)# no atmf backup redundancy enable
```

**Related commands**

atmf backup synchronize

show atmf backup

show atmf backup area

# atmf backup server

**Overview** This command configures remote file servers as the destination for AMF backups.

Use the **no** variant of this command to remove the destination server(s). When all servers are removed the system will revert to backup from external media.

**Syntax**

```
atmf backup server id {1|2} <hostlocation> username <username>
[path <path>|port <1-65535>]
```

```
no atmf backup server id {1|2}
```

| Parameter | Description |
|---|---|
| `id` | Remote server backup server identifier. |
| `{1\|2}` | The backup server identifier number (1 or 2). Note that there can be up to two backup servers, numbered 1 and 2 respectively, and you would need to run this command separately for each server. |
| `<hostlocation>` | Either the name or the IP address (IPv4 or IPv6) of the selected backup server (1 or 2). |
| `username` | Configure the username to log in with on the selected remote file server. |
| `<username>` | The selected remote file server's username. |
| `path` | The location of the backup files on the selected remote file server. By default this will be the home directory of the username used to log in with. |
| `<path>` | The directory path utilized to store the backup files on the selected remote file server. No spaces are allowed in the path. |
| `port` | The connection to the selected remote backup file server using SSH. By default SSH connects to a device on TCP port 22 but this can be changed with this command. |
| `<1-65535>` | A TCP port within the specified range. |

**Defaults** Remote backup servers are not configured. The default SSH TCP port is 22. The path utilized on the remote file server is the home directory of the username.

**Mode** Global Exec

**Usage notes** The hostname and username parameters must both be configured.

**Examples** To configure server 1 with an IPv4 address and a username of *backup1*, use the commands:

```
AMF_Master_1# configure terminal
```

```
AMF_Master_1(config)# atmf backup server id 1 192.168.1.1
username backup1
```

To configure server 1 with an IPv6 address and a username of *backup1*, use the command:

```
AMF_backup1_1# configure terminal
AMF_Master_1(config)# atmf backup server id 1 FFEE::01 username backup1
```

To configure server 2 with a hostname and username, use the command:

```
AMF_Master_1# configure terminal
AMF_Master_1(config)# atmf backup server id 2 www.example.com username backup2
```

To configure server 2 with a hostname and username in addition to the optional path and port parameters, use the command:

```
AMF_Master_1# configure terminal
AMF_Master_1(config)# atmf backup server id 2 www.example.com username backup2 path tokyo port 1024
```

To unconfigure the AMF remote backup file server 1, use the command:

```
AMF_Master_1# configure terminal
AMF_Master_1(config)# no atmf backup server id 1
```

**Related commands**

show atmf backup

# atmf backup stop

**Overview**

Running this command stops a backup that is currently running on the master node you are logged onto. Note that if you have two masters and want to stop both, then you can either run this command separately on each master node, or add both masters to a working set, and issue this command to the working set.

Note that this command can only be run on a master node.

**Syntax**

```
atmf backup stop
```

**Mode**

Privileged Exec

**Usage notes**

This command is used to halt an AMF backup that is in progress. In this situation the backup process will finish on its current node and then stop.

**Example**

To stop a backup that is currently executing on master node node-1, use the following command:

```
AMF_Master_1# amf backup stop
```

**Related commands**

atmf backup

atmf backup enable

atmf backup now

show atmf backup

# atmf backup synchronize

**Overview**

For the master node you are connected to, this command initiates a system backup of files from the node's active remote file server to its backup remote file server. Note that this process happens automatically each time the network is backed up.

Note that this command can only be run from a master node.

**Syntax**

```
atmf backup synchronize
```

**Mode**

Privileged Exec

**Example**

When connected to the master node AMF_Master_1, the following command will initiate a backup of all system related files from its active remote file server to its backup remote file server.

```
AMF_Master_1# atmf backup synchronize
```

**Related commands**

atmf backup enable

atmf backup redundancy enable

show atmf

show atmf backup

# atmf cleanup

**Overview** This command is an alias to the erase factory-default command.

# atmf container

**Overview**

Use this command to create or update an AMF container on a Virtual AMF Appliance (VAA) virtual machine.

An AMF container is an isolated instance of AlliedWare Plus with its own network interfaces, configuration, and file system. The features available inside an AMF container are a sub-set of the features available on the host VAA. These features enable the AMF container to function as a uniquely identifiable AMF master and allows for multiple tenants (up to 60) to run on a single VAA host. See the AMF Feature Overview and Configuration Guide for more information on running multiple tenants on a single VAA host.

Use the **no** variant of this command to remove an AMF container.

**Syntax**

```
atmf container <container-name>
no atmf container <container-name>
```

| Parameter | Description |
|---|---|
| *<container-name>* | The name of the AMF container to create, update, or remove. |

**Mode**

AMF Container Configuration

**Usage notes**

You cannot delete a container while it is still running. First use the **state disable** command to stop the container.

**Examples**

To create or update the AMF container "vac-wlg-1", use the commands:

```
awplus# configure terminal
awplus(config)# atmf container vac-wlg-1
awplus(config-atmf-container)#
```

To remove the AMF container "vac-wlg-1", use the commands:

```
awplus# configure terminal
awplus(config)# no atmf container vac-wlg-1
```

**Related commands**

area-link

atmf container login

bridge-group

description (amf-container)

show atmf container

state

**Command changes**

Version 5.4.7-0.1: command added

# atmf container login

**Overview** Use this command to login to an AMF container on a Virtual AMF Appliance (VAA).

An AMF container is an isolated instance of AlliedWare Plus with its own network interfaces, configuration, and file system. The features available inside an AMF container are a sub-set of the features available on the host VAA. These features enable the AMF container to function as a uniquely identifiable AMF master and allows for multiple tenants (up to 60) to run on a single VAA host. See the AMF Feature Overview and Configuration Guide for more information on running multiple tenants on a single VAA host.

**Syntax** `atmf container login <container-name>`

| Parameter | Description |
|---|---|
| *<container-name>* | The name of the AMF container you wish to login into. |

**Mode** Privileged Exec

**Usage notes** If you try to login to a AMF container that has not been created, or is not running, you will see the following message:

```
% Container does not exist or is not running.
```

To exit from a container and return to the host VAA press `<Ctrl+a q>`.

**Example** To login to container "vac-wlg-1", use the command:

```
awplus# atmf container login vac-wlg-1
```

You will then be presented with a login screen for that container:

```
Connected to tty 1
Type <Ctrl+a q> to exit the console, <Ctrl+a Ctrl+a> to enter Ctrl+a itself

vac-wlg-1 login: manager
Password: friend

AlliedWare Plus (TM) 5.4.7 02/03/17 08:46:12

vac-wlg-1>
```

**Related commands** atmf container

show atmf container

**Command changes** Version 5.4.7-0.1: command added

# atmf controller

**Overview**

Use this command to configure the device as an AMF controller. This enables you to split a large AMF network into multiple areas.

AMF controller is a licensed feature. The number of areas supported on a controller depends on the license installed on that controller.

Use the **no** variant of this command to remove the AMF controller functionality.

**Syntax**

```
atmf controller
no atmf controller
```

**Mode**

Global configuration

**Usage notes**

If a valid AMF controller license is not available on the device, the device will accept this command but will not act as a controller until you install a valid license. The following message will warn you of this:

"An AMF Controller license must be installed before this feature will become active"

***NOTE:*** *If the AMF controller functionality is removed from a device using the* ***no atmf controller*** *command then the device must be rebooted if it is to function properly as an AMF master.*

**Example**

To configure the node named *controller-1* as an AMF controller, use the commands:

```
controller-1# configure terminal
controller-1(config)# atmf controller
```

To stop the node named *controller-1* from being an AMF controller, use the commands:

```
controller-1# configure terminal
controller-1(config)# no atmf controller
```

**Related commands**

atmf area

show atmf

# atmf distribute firmware

**Overview** This command can be used to upgrade software one AMF node at a time. A URL can be selected from any media location. The latest compatible release for a node will be selected from this location.

Several procedures are performed to ensure the upgrade will succeed. This includes checking the current node release boots from flash. If there is enough space on flash, the software release is copied to flash on the new location.

The new release name is updated using the **boot system** command. The old release will become the backup release file. If a release file exists in a remote device (such as TFTP or HTTP, for example) then the URL should specify the exact release filename without using a wild card character.

The command will continue to upgrade software until all nodes are upgraded. At the end of the upgrade cycle the command should be used on the working-set.

**Syntax**

```
atmf distribute firmware <filename>
```

| Parameter | Description |
|---|---|
| *<filename>* | The filename and path of the file. See the File Management Feature Overview and Configuration Guide for valid syntax. |

**Mode** Privileged Exec

**Examples** To upgrade nodes in a AMF network with a predefined AMF group called 'teams', use the following command:

```
Team1# atmf working-set group teams
```

```
============================
Team1, Team2, Team3:
============================
Working set join
```

```
ATMF_NETWORK[3]# atmf distribute firmware card:*.rel
```

```
Retrieving data from Team1
Retrieving data from Team2
Retrieving data from Team3

ATMF Firmware Upgrade:

Node Name          New Release File           Status
-----------------------------------------------------------------
Team1              x510-5.4.7-1.1.rel         Release ready
Team2              x930-5.4.7-1.1.rel         Release ready
Team3              x930-5.4.7-1.1.rel         Release ready
Continue the rolling reboot ? (y/n):y
=================================================================
Copying Release    : x510-5.4.7-1.1.rel to Team1
Updating Release   : x510-5.4.7-1.1.rel information on Team1
=================================================================
Copying Release    : x930-5.4.7-1.1.rel to Team2
Updating Release   : x930-5.4.7-1.1.rel information on Team2
=================================================================
Copying Release    : x930-5.4.7-1.1.rel to Team3
Updating Release   : x930-5.4.7-1.1.rel information on Team3

=================================================================
New firmware will not take effect until nodes are rebooted.
=================================================================

ATMF_NETWORK[3]#
```

**Related commands** atmf working-set

# atmf domain vlan

**Overview**

The AMF domain VLAN is created when the AMF network is first initiated and is assigned a default VID of 4091. This command enables you to change the VID from this default value on this device.

The AMF domain VLAN is one of AMF's internal VLANs (the management VLAN is the other internal VLAN). AMF uses these internal VLANs to communicate network status information between nodes. These VLANs must be reserved for AMF and not used for other purposes.

An important point conceptually is that although the domain VLAN exists globally across the AMF network, it is assigned separately to each domain. The AMF network therefore can be thought of as comprising a series of domain VLANs each having the same VID and each being applied to a horizontal slice (domain) of the AMF. It follows therefore that the domain VLANs are only applied to ports that form cross-links and not to ports that form uplinks/downlinks.

***CAUTION:*** *Every member of your AMF network must have the same domain VLAN, management VLAN, and management subnet.*

***CAUTION:*** *If you change the domain VLAN, management VLAN, or management subnet of a node, that change takes effect immediately and the node will immediately leave the AMF network and try to rejoin it. The AMF network will not be complete until you have given all devices the same setting, so they can all rejoin the AMF network.*

Use the **no** variant of this command to reset the VLAN ID to its default value of 4091.

**Syntax**

```
atmf domain vlan <2-4090>
no atmf domain vlan
```

| Parameter | Description |
|---|---|
| *<2-4090>* | The VLAN number in the range 2 to 4090. |

**Default**

VLAN 4091

**Mode**

Global Configuration

**Usage notes**

We recommend you only change the domain VLAN when first creating the AMF network, and only if VLAN 4091 is already being used in your network.

However, if you do need to change the VLAN on an existing AMF network, use the following steps:

1) Create a working set of the whole of your AMF network, using the commands:

```
master# atmf working-set group all
```

You must use **working-set group all** if changing the domain VLAN. If you use a different working-set, nodes that are not in that working-set will lose contact with the AMF network.

2) The prompt will display the number of nodes in the AMF network. Record this number. In this example, the network is named "test" and has 10 nodes:

```
test[10]#
```

3) Enter the new VLAN ID, using the commands:

```
test[10]# configure terminal
test(config)[10]# atmf domain vlan <2-4090>
```

The nodes will execute the command in parallel, leave the AMF network, and attempt to rejoin through the new VLAN.

4) Create the working set again, using the commands:

```
master(config)# exit
master# atmf working-set group all
```

5) Save the configuration, using the command:

```
test[10]# write
```

6) The prompt will display the number of nodes in the AMF network. Check that this is the same as the number in step 1. If it is not, you will need to change the VLAN on missing devices by logging into their consoles directly.

***NOTE:*** *The domain VLAN will automatically be assigned an IP subnet address based on the value configured by the command atmf management subnet.*

The default VLAN ID lies outside the user-configurable range. If you need to reset the VLAN to the default VLAN ID, use the **no** variant of this command to do so.

## Examples

To change the AMF domain VLAN to 4090 in an existing AMF network, use the following commands:

```
master# atmf working-set group all
test[10]# configure terminal
test(config)[10]# atmf domain vlan 4090
master(config)# exit
master# atmf working-set group all
test[10]# write
```

To reset the AMF domain VLAN to its default of 4091in an existing AMF network, use the following commands:

```
master# atmf working-set group all
test[10]# configure terminal
test(config)[10]# no atmf domain vlan
master(config)# exit
master# atmf working-set group all
test[10]# write
```

**Related commands**

atmf management subnet

atmf management vlan

# atmf enable

**Overview** This command manually enables (turns on) the AMF feature for the device being configured.

Use the **no** variant of this command to disable (turn off) the AMF feature on the member node.

**Syntax**

```
atmf enable
no atmf enable
```

**Default** Once AMF is configured, the AMF feature starts automatically when the device starts up.

**Mode** Global Configuration

**Usage notes** The device does not auto negotiate AMF domain specific settings such as the Network Name. You should therefore, configure your device with any domain specific (non default) settings before enabling AMF.

**Examples** To turn off AMF, use the command:

```
MyNode# config terminal
MyNode(config)# no atmf enable
```

To turn on AMF, use the command:

```
MyNode(config)# atmf enable
```

This command returns the following display:

```
% Warning: The ATMF network config has been set to enable
% Save the config and restart the system for this change to take
effect.
```

# atmf group (membership)

**Overview** This command configures a device to be a member of one or more AMF groups. Groups exist in three forms: Implicit Groups, Automatic Groups, and User-defined Groups.

- Implicit Groups
  - all: All nodes in the AMF
  - current: The current working-set
  - local: The originating node.

Note that the Implicit Groups do not appear in show group output.

- Automatic Groups - These are defined by hardware architecture, e.g. x510, x230, x8100, AR3050S, AR4050S.
- User-defined Groups - These enable you to define arbitrary groups of AMF members based on your own criteria.

Each node in the AMF is automatically assigned membership to the implicit groups, and the automatic groups that are appropriate to its node type, e.g. x230, PoE. Similarly, nodes that are configured as masters are automatically assigned to the master group.

Use the **no** variant of this command to remove the membership.

**Syntax**

```
atmf group <group-list>
no atmf group <group-list>
```

| Parameter | Description |
|---|---|
| *<group-list>* | A list of group names. These should be entered as a comma delimited list without spaces.<br>Names can contain alphanumeric characters, hyphens and underscores. |

**Mode** Global Configuration

**Usage notes** You can use this command to define your own arbitrary groups of AMF members based on your own network's configuration requirements. Applying a node to a non existing group will result in the group automatically being created.

Note that the master nodes are automatically assigned to be members of the pre-existing master group.

The following example configures the device to be members of three groups; two are company departments, and one comprises all devices located in building_2. To avoid having to run this command separately on each device that is to be added to these groups, you can remotely assign all of these devices to a working-set, then use the capabilities of the working-set to apply the atmf group (membership) command to all members of the working set.

**Example 1** To specify the device to become a member of AMF groups named *marketing*, *sales*, and *building_2*, use the following commands:

```
node-1# configure terminal
node-1(config)# atmf group marketing,sales,building_2
```

**Example 2** To add the nodes *member_node_1* and *member_node_2* to groups *building1* and *sales*, first add the nodes to the working-set:

```
master_node# atmf working-set member_node_1,member_node_2
```

This command returns the following output confirming that the nodes *member_node_1* and *member_node_2* are now part of the working-set:

```
============================
member_node_1, member_node_2
============================

Working set join
```

Then add the members of the working set to the groups:

```
atmf-net[2]# configure terminal
atmf-net[2](config)# atmf group building1,sales
atmf-net[2](config)# exit
atmf-net[2]# show atmf group
```

This command returns the following output displaying the groups that are members of the working-set.

```
====================
member_node_1
====================

AMF group information

building1, sales
```

**Related commands**

show atmf group

show atmf group members

# atmf guest-class

**Overview**

This modal command creates a guest-class. Guest-classes are modal templates that can be applied to selected guest types. Once you have created a guest-class, you can select it by entering its mode. From here, you can then configure a further set of operational settings specifically for the new guest-class.

These settings can then all be applied to a guest link by running the switchport atmf-guestlink command. The following settings can be configured from each guest class mode:

- discovery method
- model type
- http-enable setting
- guest port, user name, and password

The **no** variant of this command removes the guest-class. Note that you cannot remove a guest-class that is assigned to a port.

**Syntax**

```
atmf guest-class <guest-class-name>
no atmf guest-class <guest-class-name>
```

| Parameter | Description |
|---|---|
| *<guest-class-name>* | The name assigned to the guest-class type. This can be chosen from an arbitrary string of up to 15 characters. |

**Mode**

Global Configuration

**Example**

To create a guest-class named 'camera' use the commands:

```
node1# configure terminal
node1(config)# atmf guest-class camera
node1(config-atmf-guest)#
```

To remove the guest-class named 'camera' use the commands:

```
node1# configure terminal
node1(config)# no atmf guest-class camera
```

**Related commands**

show atmf area guests

discovery

http-enable

username

modeltype

switchport atmf-guestlink

show atmf links guest

show atmf guests

login-fallback enable

# atmf log-verbose

**Overview** This command limits the number of log messages displayed on the console or permanently logged.

Use the **no** variant of this command to reset to the default.

**Syntax**

```
atmf log-verbose <1-3>
no atmf log-verbose
```

| Parameter | Description |
|---|---|
| *<1-3>* | The verbose limitation (3 = noisiest, 1 = quietest) |

**Default** The default log display is 3.

**Usage** This command is intended for use in large networks where verbose output can make the console unusable for periods of time while nodes are joining and leaving.

**Mode** Global Configuration

**Example** To set the log-verbose to noise level 2, use the command:

```
node-1# configure terminal
node-1(config)# atmf log-verbose 2
```

**Validation Command** show atmf

# atmf management subnet

**Overview** This command is used to assign a subnet that will be allocated to the AMF management and domain management VLANs. From the address space defined by this command, two subnets are created, a management subnet component and a domain component, as explained in the Usage section below.

AMF uses these internal IPv4 subnets to communicate network status information between nodes. These subnet addresses must be reserved for AMF and not used for other purposes.

***CAUTION:*** *Every member of your AMF network must have the same domain VLAN, management VLAN, and management subnet.*

***CAUTION:*** *If you change the domain VLAN, management VLAN, or management subnet of a node, that change takes effect immediately and the node will immediately leave the AMF network and try to rejoin it. The AMF network will not be complete until you have given all devices the same setting, so they can all rejoin the AMF network.*

Use the **no** variant of this command to remove the assigned subnet.

**Syntax**

```
atmf management subnet <a.b.0.0>
no atmf management subnet
```

| Parameter | Description |
|---|---|
| `<a.b.0.0>` | The IP address selected for the management subnet. Because a mask of 255.255.0.0 (i.e. /16) will be applied automatically, an IP address in the format a.b.0.0 must be selected.<br>Usually this subnet address is selected from an appropriate range from within the private address space of 172.16.0.0 to 172.31.255.255, or 192.168.0.0, as defined in RFC1918. |

**Default** 172.31.0.0. A subnet mask of 255.255.0.0 will automatically be applied.

**Mode** Global Configuration

**Usage notes** Running this command will result in the creation of a further two subnets (within the class B address space assigned) and the mask will extend from /16 to /17.

For example, if the management subnet is assigned the address 172.31.0.0/16, this will result in the automatic creation of the following two subnets:

- 172.31.0.0/17 assigned to the atmf management vlan
- 172.31.128.0/17 assigned to the atmf domain vlan.

We recommend you only change the management subnet when first creating the AMF network, and only if 172.31.0.0 is already being used in your network.

However, if you do need to change the subnet on an existing AMF network, use the following steps:

1) Create a working set of the whole of your AMF network, using the commands:

```
master# atmf working-set group all
```

You must use **working-set group all** if changing the domain VLAN, management VLAN, or management subnet. If you use a different working-set, nodes that are not in that working-set will lose contact with the AMF network.

2) The prompt will display the number of nodes in the AMF network. Record this number. In this example, the network is named "test" and has 10 nodes:

```
test[10]#
```

3) Enter the new subnet address, using the commands:

```
test[10]# configure terminal
test(config)[10]# atmf management subnet <a.b.0.0>
```

The nodes will execute the command in parallel, leave the AMF network, and attempt to rejoin through the new subnet.

4) Create the working set again, using the commands:

```
master(config)# exit
master# atmf working-set group all
```

5) Save the configuration, using the command:

```
test[10]# write
```

6) The prompt will display the number of nodes in the AMF network. Check that this is the same as the number in step 1. If it is not, you will need to change the subnet on missing devices by logging into their consoles directly.

**Examples** To change the AMF management subnet address to 172.25.0.0 in an existing AMF network, use the following commands:

```
master# atmf working-set group all
test[10]# configure terminal
test(config)[10]# atmf management subnet 172.25.0.0
master(config)# exit
master# atmf working-set group all
test[10]# write
```

To reset the AMF management subnet address to its default of 172.31.0.0 in an existing AMF network, use the following commands:

```
master# atmf working-set group all
test[10]# configure terminal
test(config)[10]# no atmf management subnet
master(config)# exit
master# atmf working-set group all
test[10]# write
```

**Related commands**

atmf domain vlan

atmf management vlan

# atmf management vlan

**Overview**

The AMF management VLAN is created when the AMF network is first initiated and is assigned a default VID of 4092. This command enables you to change the VID from this default value on this device.

The AMF management VLAN is one of AMF's internal VLANs (the domain VLAN is the other internal VLAN). AMF uses these internal VLANs to communicate network status information between nodes. These VLANs must be reserved for AMF and not used for other purposes.

***CAUTION:*** *Every member of your AMF network must have the same domain VLAN, management VLAN, and management subnet.*

***CAUTION:*** *If you change the domain VLAN, management VLAN, or management subnet of a node, that change takes effect immediately and the node will immediately leave the AMF network and try to rejoin it. The AMF network will not be complete until you have given all devices the same setting, so they can all rejoin the AMF network.*

Use the **no** variant of this command to restore the VID to the default of 4092.

**Syntax**

```
atmf management vlan <2-4090>
no atmf management vlan
```

| Parameter | Description |
|---|---|
| *<2-4090>* | The VID assigned to the AMF management VLAN. |

**Default**

VLAN 4092

**Mode**

Global Configuration

**Usage notes**

We recommend you only change the management VLAN when first creating the AMF network, and only if VLAN 4092 is already being used in your network.

However, if you do need to change the VLAN on an existing AMF network, use the following steps to ensure you change it on all nodes simultaneously:

1) Create a working set of the whole of your AMF network, using the commands:

```
master# atmf working-set group all
```

You must use **working-set group all** if changing the management VLAN. If you use a different working-set, nodes that are not in that working-set will lose contact with the AMF network.

2) The prompt will display the number of nodes in the AMF network. Record this number. In this example, the network is named "test" and has 10 nodes:

```
test[10]#
```

3) Enter the new VLAN ID, using the commands:

```
test[10]# configure terminal
test(config)[10]# atmf management vlan <2-4090>
```

The nodes will execute the command in parallel, leave the AMF network, and attempt to rejoin through the new VLAN.

4) Create the working set again, using the commands:

```
master(config)# exit
master# atmf working-set group all
```

5) Save the configuration, using the command:

```
test[10]# write
```

6) The prompt will display the number of nodes in the AMF network. Check that this is the same as the number in step 1. If it is not, you will need to change the VLAN on missing devices by logging into their consoles directly.

***NOTE:*** *The management VLAN will automatically be assigned an IP subnet address based on the value configured by the command atmf management subnet.*

The default VLAN ID lies outside the user-configurable range. If you need to reset the VLAN to the default VLAN ID, use the **no** variant of this command to do so.

## Examples

To change the AMF management VLAN to 4090 in an existing AMF network, use the following commands:

```
master# atmf working-set group all
test[10]# configure terminal
test(config)[10]# atmf management vlan 4090
master(config)# exit
master# atmf working-set group all
test[10]# write
```

To reset the AMF management VLAN to its default of 4092 in an existing AMF network, use the following commands:

```
master# atmf working-set group all
test[10]# configure terminal
test(config)[10]# no atmf management vlan
master(config)# exit
master# atmf working-set group all
test[10]# write
```

## Related commands

atmf domain vlan

atmf management subnet

# atmf master

**Overview**

This command configures the device to be an AMF master node and automatically creates an AMF master group. The master node is considered to be the core of the AMF network, and must be present for the AMF to form. The AMF master has its node depth set to 0. Note that the node depth vertical distance is determined by the number of uplinks/downlinks that exist between the node and its master.

An AMF master node must be present for an AMF network to form. Up to two AMF master nodes may exist in a network, and they **must** be connected by an AMF crosslink.

***NOTE:*** *Master nodes are an essential component of an AMF network. In order to run AMF, an AMF License is required for each master node.*

If the crosslink between two AMF masters fails, then one of the masters will become isolated from the rest of the AMF network.

Use the **no** variant of this command to remove the device as an AMF master node. The node will retain its node depth of 0 until the network is rebooted.

***NOTE:*** *Node depth is the vertical distance (or level) from the master node (whose depth value is 0).*

**Syntax**

```
atmf master
no atmf master
```

**Default**

The device is not configured to be an AMF master node.

**Mode**

Global Configuration

**Example**

To specify that this node is an AMF master, use the following command:

```
node-1# configure terminal
node-1(config)# atmf master
```

**Related commands**

show atmf

show atmf group

# atmf mtu

**Overview** This command configures the AMF network Maximum Transmission Unit (MTU). The MTU value will be applied to the AMF Management VLAN, the AMF Domain VLAN and AMF Area links.

Use the **no** variant of this command to restore the default MTU.

**Syntax**

```
atmf mtu <1300-1442>
no atmf mtu
```

| Parameter | Description |
|---|---|
| *<1300-1442>* | The value of the maximum transmission unit for the AMF network, which sets the maximum size of all AMF packets generated from the device. |

**Default** 1300

**Mode** Global Configuration

**Usage notes** The default value of 1300 will work for all AMF networks (including those that involve virtual links over IPsec tunnels). If there are virtual links over IPsec tunnels anywhere in the AMF network, we recommend not changing this default. If there are no virtual links over IPsec tunnels, then this AMF MTU value may be increased for network efficiency.

**Example** To change the ATMF network MTU to 1442, use the command:

```
awplus(config)# atmf mtu 1442
```

**Related commands** show atmf detail

# atmf network-name

**Overview** This command applies an AMF network name to a (prospective) AMF node. In order for an AMF network to be valid, its network-name must be configured on at least two nodes, one of which must be configured as a master and have an AMF License applied. These nodes may be connected using either AMF downlinks or crosslinks.

For more information on configuring an AMF master node, see the command atmf master.

Use the **no** variant of this command to remove the AMF network name.

**Syntax**

```
atmf network-name <name>
no atmf network-name
```

| Parameter | Description |
|---|---|
| *<name>* | The AMF network name. Up to 15 printable characters can be entered for the network-name. |

**Mode** Global Configuration

**Usage notes** This is one of the essential commands when configuring AMF and must be entered on each node that is to be part of the AMF.

A switching node (master or member) may be a member of only one AMF network.

***CAUTION:*** *Ensure that you enter the correct network name. Entering an incorrect name will cause the AMF network to fragment (at the next reboot).*

**Example** To set the AMF network name to amf_net use the command:

```
Node_1(config)# atmf network-name amf_net
```

# atmf provision (interface)

**Overview**

This command configures a specified port on an AMF node to accept a provisioned node, via an AMF link, some time in the future.

Use the **no** variant of this command to remove the provisioning on the node.

**Syntax**

```
atmf provision <nodename>
no atmf provision
```

| Parameter | Description |
|---|---|
| *<nodename>* | The name of the provisioned node that will appear on the AMF network in the future. |

**Mode**

Interface Configuration for a switchport, a static aggregator, dynamic channel group or an Eth port on an AR-Series device.

**Usage notes**

The port should be configured as an AMF link or cross link and should be 'down' to add or remove a provisioned node.

**Example**

To provision an AMF node named node1 for port1.0.1, use the commands:

```
host1(config)# interface port1.0.1
host1(config-if)# atmf provision node1
```

**Related commands**

atmf provision node

clone (amf-provision)

configure boot config (amf-provision)

configure boot system (amf-provision)

copy (amf-provision)

create (amf-provision)

delete (amf-provision)

identity (amf-provision)

license-cert (amf-provision)

locate (amf-provision)

show atmf provision nodes

show atmf links

switchport atmf-link

switchport atmf-crosslink

# atmf provision node

**Overview**

Use this command to provision a replacement node for a specified interface. Node provisioning is effectively the process of creating a backup file-set on a master node that can be loaded onto a provisioned node some time in the future. This file-set is created just as if the provisioned node really existed and was connected to the network. Typically these comprise configuration, operating system, and license files etc.

You can optionally provision a node with multiple device-type backups. When a device is then attached to the network, AMF uses its device-type to find the correct configuration to use. For example you can create an x510 and an x530 provisioning configuration for a node called 'node1' and if either an x510 or an x530 is attached to that node the appropriate configuration will be used.

Use the **no** variant of this command to remove a provisioned node.

**Syntax**

```
atmf provision node <nodename> [device <device-type>]
no atmf provision node <nodename> [device <device-type>]
```

| Parameter | Description |
|---|---|
| *<nodename>* | The name of the provisioned node that will appear on the AMF network. |
| `device` | Optionally specify a device type. |
| *<device-type>* | Any valid device type e.g. AR3050s, ie200, x950. For a full list of valid device types use the command **atmf provision node <nodename> device ?**. |

**Mode**

Privileged Exec

**Usage notes**

This command creates the directory structure for the provisioned node's file-set. It also switches to the AMF provision node prompt so that the nodes backup file-set can be created or updated. This is typically done with the create (amf-provision) or clone (amf-provision) commands.

For more information on AMF provisioning, see the AMF Feature Overview and Configuration Guide..

**Example**

To configure node named 'node1', use the command:

```
awplus# atmf provision node node1
awplus(atmf-provision)#
```

To configure a node named 'node1' for device type 'x530', use the command:

```
awplus# atmf provision node node1 device x530
awplus(atmf-provision)#
```

**Related commands**

atmf provision (interface)

clone (amf-provision)

configure boot config (amf-provision)

configure boot system (amf-provision)

copy (amf-provision)

create (amf-provision)

delete (amf-provision)

identity (amf-provision)

license-cert (amf-provision)

locate (amf-provision)

show atmf provision nodes

**Command changes**

Version 5.4.9-0.1: command added

# atmf reboot-rolling

**Overview**

This command enables you to reboot the nodes in an AMF working-set, one at a time, as a rolling sequence in order to minimize downtime. Once a rebooted node has finished running its configuration and its ports are up, it re-joins the AMF network and the next node is rebooted.

By adding the *url* parameter, you can also upgrade your devices' software one AMF node at a time.

The **force** parameter forces the rolling reboot to continue even if a previous node does not rejoin the AMF network. Without the **force** parameter, the unsuitable node will time-out and the rolling reboot process will stop. However, with the **force** parameter applied, the process will ignore the timeout and move on to reboot the next node in the sequence.

This command can take a significant amount of time to complete.

**Syntax**

```
atmf reboot-rolling [force] [<url>]
```

| Parameter | Description |
|---|---|
| `force` | Ignore a failed node and move on to the next node. Where a node fails to reboot a timeout is applied based on the time taken during the last reboot. |
| *<url>* | The path to the software upgrade file. |

**Mode**

Privileged Exec

**Usage notes**

You can load the software from a variety of locations. The latest compatible release for a node will be selected from your selected location, based on the parameters and URL you have entered.

For example card:/5.4.6/x*-5.4.6-*.rel will select from the folder card:/5.4.6 the latest file that matches the selection x (wildcard) -5.4.6-(wildcard).rel. Because x* is applied, each device type will be detected and its appropriate release file will be installed.

Other allowable entries are:

| Entry | Used when loading software |
|---|---|
| card:*.rel: | from an SD card |
| tftp:*<ip-address>*: | from a TFTP server |
| usb: | from a USB flash drive |
| flash: | from flash memory, e.g. from one x930 switch to another |
| scp: | using secure copy |
| http: | from an HTTP file server |

Several checks are performed to ensure the upgrade will succeed. These include checking the current node release boots from flash. If there is enough space on flash, the software release is copied to flash to a new location on each node as it is processed. The new release name will be updated using the **boot system**<*release-name*> command, and the old release will become the backup release file.

***NOTE:*** *If you are using TFTP or HTTP, for example, to access a file on a remote device then the URL should specify the exact release filename without using wild card characters.*

On bootup the software release is verified. Should an upgrade fail, the upgrading unit will revert back to its previous software version. At the completion of this command, a report is run showing the release upgrade status of each node.

***NOTE:*** *Take care when removing external media or rebooting your devices. Removing an external media while files are being written entails a significant risk of causing a file corruption.*

**Example 1** To reboot all x510 nodes in an AMF network, use the following command:

```
Bld2_Floor_1# atmf working-set group x510
```

This command returns the following type of screen output:

```
====================
node1, node2, node3:
====================

Working set join

AMF_NETWORK[3]#
```

```
ATMF_NETWORK[3]# atmf reboot-rolling
```

When the reboot has completed, a number of status screens appear. The selection of these screens will depend on the parameters set.

```
Bld2_Floor_1#atmf working-set group x510

=============================
SW_Team1, SW_Team2, SW_Team3:
=============================

Working set join

ATMF_NETWORK[3]#atmf reboot-rolling
ATMF Rolling Reboot Nodes:

                    Timeout
Node Name           (Minutes)
-----------------------------
SW_Team1               14
SW_Team2                8
SW_Team3                8
Continue the rolling reboot ? (y/n):y
==================================================
ATMF Rolling Reboot: Rebooting SW_Team1
==================================================

% SW_Team1 has left the working-set
Reboot of SW_Team1 has completed
==================================================
ATMF Rolling Reboot: Rebooting SW_Team2
==================================================

% SW_Team2 has left the working-set
Reboot of SW_Team2 has completed
==================================================
ATMF Rolling Reboot: Rebooting SW_Team3
==================================================

% SW_Team3 has left the working-set
Reboot of SW_Team3 has completed

==================================================
ATMF Rolling Reboot Complete
Node Name           Reboot Status
-----------------------------------
SW_Team1               Rebooted
SW_Team2               Rebooted
SW_Team3               Rebooted
==================================================
```

**Example 2** To update firmware releases, use the following command:

```
Node_1# atmf working-set group all
ATMF_NETWORK[9]# atmf reboot-rolling
card:/5.4.6/x*-5.4.6-*.rel
```

```
ATMF Rolling Reboot Nodes:

                     Timeout
Node Name            (Minutes)    New Release File             Status
-----------------------------------------------------------------------------
SW_Team1                8         x510-5.4.6-0.1.rel           Release Ready
SW_Team2               10         x510-5.4.6-0.1.rel           Release Ready
SW_Team3                8         ---                          Not Supported
HW_Team1                6         ---                          Incompatible
Bld1_Floor_2            2         x930-5.4.6-0.1.rel           Release Ready
Bld1_Floor_1            4         ---                          Incompatible
Building_1              2         ---                          Incompatible
Building_2              2         x908-5.4.6-0.1.rel           Release Ready
Continue upgrading releases ? (y/n):
```

# atmf recover

**Overview** This command is used to manually initiate the recovery (or replication) of an AMF node, usually when a node is being replaced.

**Syntax**

```
atmf recover [<node-name> master <node-name>]
atmf recover [<node-name> controller <node-name>]
```

| Parameter | Description |
|---|---|
| *<node-name>* | The name of the device whose configuration is to be recovered or replicated. |
| `master` *<node-name>* | The name of the master device that holds the required configuration information.<br>Note that although you can omit both the node name and the master name; you cannot specify a master name unless you also specify the node name. |
| `controller` *<node-name>* | The name of the controller that holds the required configuration information.<br>Note that although you can omit both the node name and the controller name; you cannot specify a controller name unless you also specify the node name. |

**Mode** Privileged Exec

**Usage notes** The recovery/replication process involves loading the configuration file for a node that is either about to be replaced or has experienced some problem. You can specify the configuration file of the device being replaced by using the *<node-name>* parameter, and you can specify the name of the master node or controller holding the configuration file.

If the *<node-name>* parameter is not entered then the node will attempt to use one that has been previously configured. If the replacement node has no previous configuration (and has no previously used node-name), then the recovery will fail.

If the master or controller name is not specified then the device will poll all known AMF masters and controllers and execute an election process (based on the last successful backup and its timestamp) to determine which to use. If no valid backup master or controller is found, then this command will fail.

No error checking occurs when this command is run. Regardless of the last backup status, the recovering node will attempt to load its configuration from the specified master node or controller.

If the node has previously been configured, we recommend that you suspend any AMF backup before running this command. This is to prevent corruption of the backup files on the AMF master as it attempts to both backup and recover the node at the same time.

**Example**

To recover the AMF node named Node_10 from the AMF master node named Master_2, use the following command:

```
Master_2# atmf recover Node_10 master Master_2
```

**Related commands**

atmf backup stop

show atmf backup

show atmf

# atmf recover guest

**Overview** Use this command to initiate a guest node recovery or replacement by reloading its backup file-set that is located within the AMF backup system. Note that this command must be run on the edge node device that connects to the guest node.

**Syntax**

```
atmf recover guest [<guest-port>]
```

| Parameter | Description |
|---|---|
| *<guest-port>* | The port number that connects to the guest node. |

**Mode** User Exec/Privileged Exec

**Example** To recover a guest on node1 port1.0.1, use the following command

```
node1# atmf recover guest port1.0.1
```

**Related commands** show atmf backup guest

# atmf recover led-off

**Overview** This command turns off the recovery failure flashing port LEDs. It reverts the LED's function to their normal operational mode, and in doing so assists with resolving the recovery problem. You can repeat this process until the recovery failure has been resolved. For more information, see the AMF Feature Overview and Configuration Guide.

**Syntax**

```
atmf recover led-off
```

**Default** Normal operational mode

**Mode** Privileged Exec

**Example** To revert the LEDs on Node1 from recovery mode display to their normal operational mode, use the command:

```
Node1# atmf recover led-off
```

**Related commands** atmf recover

# atmf recover over-eth

**Overview**

Use this command to enable AMF recovery over an AR-series device's Eth port. This setting persists even after restoring a device to a 'clean' state with the erase factory-default or atmf cleanup command.

Use the **no** variant of this command to disable AMF recover over an Eth port.

**Syntax**

```
atmf recover over-eth
no atmf recover over-eth
```

**Default**

Eth ports cannot be used for recovery.

**Mode**

Privileged Exec

**Usage notes**

AMF links over Eth ports are only available if your network is running in AMF secure mode (see atmf secure-mode for more information on AMF secure mode).

**Example**

To enable AMF recovery over an Eth port, use the command:

```
awplus# atmf recover over-eth
```

To disable AMF recovery over an Eth port, use the commands:

```
awplus# no atmf recover over-eth
```

**Related commands**

atmf-link

atmf recover

atmf secure-mode

erase factory-default

show atmf detail

**Command changes**

Version 5.5.0-1.1: command added

# atmf recovery-server

**Overview**

Use this command on an AMF master to process recovery requests from isolated AMF nodes. An isolated node is an AMF member that is only connected to the rest of the AMF network via a virtual-link.

This option allows these nodes, which have no AMF neighbors, to be identified for recovery or provisioning purposes. They are identified using an identity token which is stored on the AMF master.

Use the **no** variant of this command to disable processing of recovery requests from isolated AMF nodes.

**Syntax**

```
atmf recovery-server
no atmf recovery-server
```

**Default**

Recovery-server is disabled by default.

**Mode**

Global Configuration

**Usage notes**

Once **recovery-server** is enabled on an AMF network, the next time an isolated node is backed up its identity token will be stored in the AMF master's database. Should the device fail it can then be replaced and auto-recovery will occur as long as:

- the AMF master is accessible to the isolated node, and
- either, a DHCP server is configured to send the Uniform Resource Identifier (URI) of the AMF master to the recovering node, or
- a DNS server is configured to resolve the default recovery URI ( https://amfrecovery.alliedtelesis.com) to the IP address of the AMF master.

Provisioning of isolated nodes is achieved by creating an identity token for the new node using the identity (amf-provision) command.

See the AMF Feature Overview and Configuration Guide for information on preparing your network for recovering or provisioning isolated nodes.

**Example**

To enable recovery-server on an AMF master, use the commands:

```
awplus# configure terminal
awplus(config)# atmf recovery-server
```

To disable recovery-server on an AMF master, use the commands:

```
awplus# configure terminal
awplus(config)# no atmf recovery-server
```

**Related commands**

atmf backup

atmf cleanup

identity (amf-provision)

atmf virtual-link

**Command changes** Version 5.4.7-2.1: command added

# atmf remote-login

**Overview** Use this command to remotely login to other AMF nodes in order to run commands as if you were a local user of that node.

**Syntax**

```
atmf remote-login [user <name>] <nodename>
```

| Parameter | Description |
|---|---|
| *<name>* | The name of a user on the remote node. |
| *<nodename>* | The name of the remote AMF node you are connecting to. |

**Mode** Privileged Exec (This command will only run at privilege level 15)

**Usage notes** You do not need a valid login on the local device in order to run this command. The session will take you to the enable prompt on the new device. If the remote login session exits for any reason (e.g. device reboot) you will be returned to the originating node.

You can create additional user accounts on nodes. AMF's goal is to provide a uniform management plane across the whole network, so we recommend you use the same user accounts on all the nodes in the network.

In reality, though, it is not essential to have the same accounts on all the nodes. Users can remote login from one node to a second node even if they are logged into the first node with a user account that does not exist on the second node (provided that atmf restricted-login is disabled and the user account on the first node has privilege level 15).

Moreover, it is possible to use a RADIUS or TACACS+ server to manage user authentication, so users can log into AMF nodes using user accounts that are present on the RADIUS or TACACS+ server, and not present in the local user databases of the AMF nodes.

The software will not allow you to run multiple remote login sessions. You must exit an existing session before starting a new one.

If you disconnect from the VTY session without first exiting from the AMF remote session, the device will keep the AMF remote session open until the exec-timeout time expires (10 minutes by default). If the exec-timeout time is set to infinity (**exec-timeout 0 0**), then the device is unable to ever close the remote session. To avoid this, we recommend you use the **exit** command to close AMF remote sessions, instead of closing the associated VTY sessions. We also recommend you avoid setting the exec-timeout to infinity.

**Example** To remotely login from node Node10 to Node20, use the following command:

```
Node10# atmf remote-login node20
Node20>
```

To close the session on Node20 and return to Node10's command line, use the following command:

```
Node20# exit
Node10#
```

In this example, user User1 is a valid user of node5. They can remotely login from node5 to node3 by using the following commands:

```
node5# atmf remote-login user User1 node3
node3> enable
```

**Related commands**

atmf restricted-login

**Command changes**

Version 5.4.6-2.1: changes to AMF user account requirements

# atmf restricted-login

**Overview**

By default, users who are logged into any node on an AMF network are able to manage any other node by using either working-sets or an AMF remote login. If the access provided by this feature is too wide, or contravenes network security restrictions, it can be limited by running this command, which changes the access so that:

- users who are logged into non-master nodes cannot execute any commands that involve working-sets, and
- from non-master nodes, users can use remote-login, but only to login to a user account that is valid on the remote device (via a statically configured account or RADIUS/TACACS+). Users are also required to enter the password for that user account.

Once entered on any AMF master node, this command will propagate across the network.

Use the **no** variant of this command to disable restricted login on the AMF network. This allows access to the **atmf working-set** command from any node in the AMF network.

**Syntax**

```
atmf restricted-login
no atmf restricted-login
```

**Mode**

Privileged Exec

**Default**

Master nodes operate with **atmf restricted-login** disabled.

Member nodes operate with **atmf restricted-login** enabled.

***NOTE:*** *The default conditions of this command vary from those applied by its "no" variant. This is because the restricted-login action is only applied by **master** nodes, and in the absence of a master node, the default is to apply the restricted action to all **member** nodes with AMF configured.*

**Usage notes**

In the presence of a **master** node, its default of **atmf restricted-login disabled** will propagate to all its member nodes. Similarly, any change in this command's status that is made on a master node, will also propagate to all its member nodes

Note that once you have run this command, certain other commands that utilize the AMF working-set command, such as the **include**, **atmf reboot-rolling** and **show atmf group members** commands, will operate only on master nodes.

Restricted-login must be enabled on AMF areas with more than 120 nodes.

**Example**

To enable restricted login, use the command

```
Node_20(config)# atmf restricted-login node20
```

**Related commands**

atmf remote-login

show atmf

**Command changes** Version 5.4.6-2.1: changes to AMF user account requirements

# atmf retry guest-link

**Overview**

Use this command to retry an AMF guest-link by restarting AMF guest discovery on a port if it is currently in the failed state.

If no port is specified then all configured AMF guest-link ports that are in the failed state are retried.

If a port is specified then that port will only be retried if it is both:

- configured as an AMF guest-link, and
- it is currently in the failed state.

**Syntax**

```
atmf retry guest-link [<interface>]
```

| Parameter | Description |
|---|---|
| *<interface>* | Name of the interface the guest-link you want to retry is configured on. |

**Mode**

Privileged Exec

**Example**

To retry all configured AMF guest-link currently in a failed state, use the command:

```
awplus# atmf retry guest-link
```

To retry an AMF guest-link configured on port1.0.2 currently in a failed state, use the command:

```
awplus# atmf retry guest-link port1.0.2
```

**Related commands**

show atmf links guest

switchport atmf-guestlink

# atmf secure-mode

**Overview**

Use this command to enable AMF secure mode on an AMF node. AMF secure mode makes an AMF network more secure by:

- Adding an authorization mechanism before and AMF member is allowed to join an AMF network.
- The encryption of all AMF packets sent between AMF nodes.
- Adding support for user login authentication by RADIUS or TACACS+, and removing the requirement to have the same privileged user account in the local user database on all devices in the AMF network.
- Adding additional logging which enables network administrators to monitor attempts to gain unauthorized access to the AMF network.

Once the secure mode command is run on all nodes on an AMF network, the AMF masters and AMF controllers manage the addition of AMF nodes and AMF areas to the AMF network.

Use the **no** variant of this command to disable AMF secure mode on an AMF node.

**Syntax**

```
atmf secure-mode
no atmf secure-mode
```

**Default**

Secure mode is disabled by default.

**Mode**

Global Configuration

**Usage notes**

When an AMF network is running in AMF secure mode the atmf restricted-login feature is automatically enabled. This restricts the atmf working-set command to users that are logged on to an AMF master. This feature cannot be disabled independently of secure mode.

When AMF secure mode is enabled the AMF controllers and masters in the AMF network form a group of certificate authorities. A node may only join a secure AMF network once it has been authorized by a master or controller. When enabled, all devices in the AMF network must be running in secure mode. Unsecured devices will not be able to join a secure AMF network.

**Example**

To enable AMF secure mode on an AMF node, use the commands:

```
awplus# configure terminal
awplus(config)# atmf secure-mode
```

To disable AMF secure mode on an AMF node, use the commands:

```
awplus# configure terminal
awplus(config)# no atmf secure-mode
```

**Related commands**

atmf authorize

atmf secure-mode certificate expiry

clear atmf secure-mode certificates

clear atmf secure-mode statistics

show atmf

show atmf authorization

show atmf secure-mode

show atmf secure-mode certificates

show atmf secure-mode sa

show atmf secure-mode statistics

**Command changes**

Version 5.4.7-0.3: command added

# atmf secure-mode certificate expire

**Overview** Use this command on an AMF master to expire a secure mode certificate. Running this command will force the removal of the AMF node from the network.

**Syntax**

```
atmf secure-mode certificate expire <node-name> [area
<area-name>]
```

| Parameter | Description |
|---|---|
| *<node-name>* | Name of the AMF node you want to expire the certificate for. |
| `area` | Specify an AMF area. |
| *<area-name>* | Name of the AMF area you want to expire the AMF nodes certificate for. |

**Mode** Privileged Exec

**Example** To remove an AMF node named “node3” from an AMF network, use the following command on the AMF master:

```
awplus# atmf secure-mode certificate expire node3
```

To remove an AMF node named “node2” in an area named “area2”, use the following command on the AMF master:

```
awplus# atmf secure-mode certificate expire node2 area area2
```

**Related commands**

atmf secure-mode

show atmf secure-mode

show atmf secure-mode certificates

**Command changes** Version 5.4.7-0.3: command added

# atmf secure-mode certificate expiry

**Overview** Use this command to set the expiry time of AMF secure mode certificates. Once an AMF node's certificate expires it must re-authorize and obtain a new certificate from the AMF master.

Use the **no** variant of this command to reset the expiry time to 180 days.

**Syntax**

```
atmf secure-mode certificate expiry {<days>|infinite}
no atmf secure-mode certificate expiry
```

| Parameter | Description |
|---|---|
| *<days>* | Length of time, in days, that an AMF secure mode certificate remains valid. A value between 1 and 365. |
| `infinite` | The authorization certificate does not expire, in other words AMF nodes stay authorized indefinitely. |

**Default** The default expiry time is 180 days.

**Mode** Global Configuration

**Example** To set AMF secure mode certificate expiry to 7 days, use the commands:

```
awplus# configure terminal
awplus(config)# atmf secure-mode certificate expiry 7
```

To set AMF secure mode certificates to never expire, use the commands:

```
awplus# configure terminal
awplus(config)# atmf secure-mode certificate expiry infinite
```

To reset the certificate expiry to 180 days, use the commands:

```
awplus# configure terminal
awplus(config)# no atmf secure-mode certificate expiry
```

**Related commands**

atmf secure-mode

show atmf secure-mode

show atmf secure-mode certificates

**Command changes** Version 5.4.7-0.3: command added

# atmf secure-mode certificate renew

**Overview**

Use this command to force all local certificates to expire and be renewed on an AMF secure mode network.

Secure mode certificates renew automatically but this command could be used to renew a certificate in a situation where the automatic renewal may happen while the device is not attached to the AMF network.

**Syntax**

```
atmf secure-mode certificate renew
```

**Mode**

Privileged Exec

**Example**

To renew a local certificate on a AMF member or AMF master, use the command:

```
awplus# atmf secure-mode certificate renew
```

**Related commands**

show atmf secure-mode certificates

show atmf secure-mode statistics

**Command changes**

Version 5.4.7-0.3: command added

# atmf secure-mode enable-all

**Overview**

Use this command to enable AMF secure mode on an entire network. AMF secure mode makes an AMF network more secure by:

- Adding an authorization mechanism before an AMF member is allowed to join an AMF network.
- The encryption of all AMF packets sent between AMF nodes.
- Adding support for user login authentication by RADIUS or TACACS+, and removing the requirement to have the same privileged user account in the local user database on all devices in the AMF network.
- Adding additional logging which enables network administrators to monitor attempts to gain unauthorized access to the AMF network.

Once this command is run on an AMF network, the AMF masters and AMF controllers manage the addition of AMF nodes and AMF areas to the AMF network.

This command can only be run on an AMF master.

Use the **no** variant of this command to disable AMF secure mode on an entire network.

**Syntax**

```
atmf secure-mode enable-all
no atmf secure-mode enable-all
```

**Default**

Secure mode is disabled by default.

**Mode**

Privileged Exec

**Usage notes**

When an AMF network is running in AMF secure mode the atmf restricted-login feature is automatically enabled. This restricts the atmf working-set command to users that are logged on to an AMF master. This feature cannot be disabled independently of secure mode.

When AMF secure mode is enabled the AMF controllers and masters in the AMF network form a group of certificate authorities. A node may only join a secure AMF network once it has been authorized by a master or controller. When enabled, all devices in the AMF network must be running in secure mode. Unsecured devices will not be able to join a secure AMF network.

Running **atmf secure-mode enable-all**:

- Groups all AMF members in a working set.
- Executes clear atmf secure-mode certificates on the working set of members, which removes existing secure mode certificates from all the nodes.
- Groups all the AMF masters in a working set.
- Executes atmf authorize provision **all** on the working set of masters, so all masters provision all nodes.
- Groups all AMF nodes in a working set.

- Runs a script which executes atmf secure-mode and then writes the configuration file on each node.
- Starts a timer that ticks every 10 seconds, for a maximum of 10 times, and checks if all the secure mode capable nodes rejoin the AMF network.

Running **no atmf secure-mode enable-all**:

- Groups all AMF nodes in a working set.
- Runs a script which executes **no** atmf secure-mode and then writes the configuration file on each node.
- Starts a timer that ticks every 10 seconds, for a maximum of 10 times, and checks if all the secure mode capable nodes rejoin the AMF network.

***NOTE:*** *Enabling or disabling secure mode on the network saves the running-config on every device.*

**Example**

To enable AMF secure mode on the entire network, use the command:

```
awplus# atmf secure-mode enable-all
```

You will be prompted to confirm the action:

```
Total number of nodes 21
21 nodes support secure-mode

Enable secure-mode across the AMF network ? (y/n): y
```

To disable AMF secure mode on the entire network, use the command:

```
awplus# no atmf secure-mode enable-all
```

You will be prompted to confirm the action:

```
% Warning: All security certificates will be deleted.
Disable secure-mode across the AMF network ? (y/n): y
```

**Related commands**

aaa authentication auth-web

show atmf

**Command changes**

Version 5.4.7-0.3: command added

# atmf select-area

**Overview**

Use this command to access devices in an area outside the core area on the controller network. This command will connect you to the remote area-master of the specified area.

This command is only valid on AMF controllers.

The **no** variant of this command disconnects you from the remote area-master.

**Syntax**

```
atmf select-area {<area-name>|local}
no atmf select-area
```

| Parameter | Description |
|---|---|
| *<area-name>* | Connect to the remote area-master of the area with this name. |
| `local` | Return to managing the local controller area. |

**Mode**

Privileged Exec

**Usage notes**

After running this command, use the atmf working-set command to select the set of nodes you want to access in the remote area.

**Example**

To access nodes in the area Canterbury, use the command

```
controller-1# atmf select-area Canterbury
```

This displays the following output:

```
Test_network[3]#atmf select-area Canterbury
===============================================
Connected to area Canterbury via host Avensis:
===============================================
```

To return to the local area for controller-1, use the command

```
controller-1# atmf select-area local
```

Alternatively, to return to the local area for controller-1, use the command

```
controller-1# no atmf select-area
```

**Related commands**

atmf working-set

# atmf topology-gui enable

**Overview**

Use this command to enable the operation of Vista Manager EX on the Master device.

Vista Manager EX delivers state-of-the-art monitoring and management for your Autonomous Management Framework™ (AMF) network, by automatically creating a complete topology map of switches, firewalls and wireless access points (APs). An expanded view includes third-party devices such as security cameras.

Use the **no** variant of this command to disable operation of Vista Manager EX.

**Syntax**

```
atmf topology-gui enable
no atmf topology-gui enable
```

**Default**

Disabled by default on AMF Master and member nodes. Enabled by default on Controllers.

**Mode**

Global Configuration mode

**Usage notes**

To use Vista Manager EX, you must also enable the HTTP service on all AMF nodes, including all AMF masters and controllers. The HTTP service is enabled by default on AlliedWare Plus switches and disabled by default on AR-Series firewalls. To enable it, use the commands:

```
Node1# configure terminal
Node1(config)# service http
```

On one master in each AMF area in your network, you also need to configure the master to send event notifications to Vista Manager EX. To do this, use the commands:

```
Node1# configure terminal
Node1(config)# log event-host <ip-address> atmf-topology-event
```

**Examples**

To enable Vista Manager EX on Node1, use the commands:

```
Node1# configure terminal
Node1(config)# atmf topology-gui enable
```

To disable Vista Manager EX on Node1, use the commands:

```
Node1# configure terminal
Node1(config)# no atmf topology-gui enable
```

**Related commands**

atmf enable

log event-host

service http

# atmf trustpoint

**Overview** Use this command to set a PKI trustpoint for an AMF network. This command needs to be run on an AMF master or controller.

The self-signed certificate authority (CA) certificate is distributed to every node on the AMF network. It is used to verify client certificates signed by the trustpoint.

Use the **no** variant of this command to remove an AMF trustpoint.

**Syntax**

```
atmf trustpoint <trustpoint-name>
no atmf trustpoint <trustpoint-name>
```

| Parameter | Description |
|---|---|
| *<trustpoint-name>* | Name of the trustpoint. |

**Default** No trustpoint is configured by default.

**Mode** Global Configuration

**Usage notes** Before using the **atmf trustpoint** command you will need to establish a trustpoint. For example, you can create a local self-signed trustpoint using the procedure outlined below.

Create a self-signed trustpoint called 'our_trustpoint' with keypair 'our_key':

```
awplus# configure terminal
awplus(config)# crypto pki trustpoint our_trustpoint
awplus(ca-trustpoint)# enrollment selfsigned
awplus(ca-trustpoint)# rsakeypair our_key
awplus(ca-trustpoint)# exit
awplus(config)# exit
```

Create the root and server certificates for this trustpoint:

```
awplus# crypto pki authenticate our_trustpoint
awplus# crypto pki enroll our_trustpoint
```

For more information about the AlliedWare Plus implementation of Public Key Infrastructure (PKI), see the Public Key Infrastructure (PKI) Feature Overview and Configuration Guide

**Example** To configure an AMF trustpoint for the trustpoint 'our_trustpoint', use the commands:

```
awplus# configure terminal
awplus(config)# atmf trustpoint our_trustpoint
```

To remove an AMF trustpoint for the trustpoint 'our_trustpoint', use the commands:

```
awplus# configure terminal
awplus(config)# no atmf trustpoint our_trustpoint
```

**Related commands**

crypto pki trustpoint

show atmf

**Command changes**

Version 5.4.7-2.1: command added

# atmf virtual-crosslink

**Overview** Use this command to create a virtual crosslink. A virtual crosslink connects an AMF master or controller on a physical device to a Virtual AMF Appliance (VAA) master or controller.

All AMF master nodes must reside in the same AMF domain and are required to be directly connected using AMF crosslinks. In order to be able to meet this requirement for AMF masters running on VAAs, a virtual crosslink connects the AMF master or controller on the physical device to the master or controller on the VAA.

Use the **no** variant of this command to remove a virtual crosslink.

**Syntax**

```
atmf virtual-crosslink id <local-id> ip <local-ip> remote-id
<remote-id> remote-ip <remote-ip>
```

```
no atmf virtual-crosslink id <local-id>
```

| Parameter | Description |
|---|---|
| *<local-id>* | ID of the local tunnel port, a value between 1 and 4094. |
| *<local-ip>* | IPv4 address of the local tunnel port in a.b.c.d format. |
| *<remote-id>* | ID of the remote tunnel port, a value between 1 and 4094. |
| *<remote-ip>* | IPv4 address of the remote tunnel port in a.b.c.d format. |

**Default** No AMF virtual crosslinks are created by default.

**Mode** Global Configuration

**Usage notes** This command allows a virtual tunnel to be created between two remote sites over a layer 3 link. The tunnel encapsulates AMF packets and allows them to be sent transparently across a Wide Area Network (WAN) such as the Internet.

Configuration involves creating a local tunnel ID, a local IP address, a remote tunnel ID and a remote IP address. Each side of the tunnel must be configured with the same, but mirrored parameters.

***NOTE:*** *Virtual crosslinks are not supported on AMF container masters, therefore if multiple tenants on a single VAA host are configured for secure mode, only a single AMF master is supported per area.*

**Example** To setup a virtual link from a local site, “siteA”, to a remote site, “siteB”, (assuming there is already IP connectivity between the sites), run the following commands at the local site:

```
siteA# configure terminal
```

```
siteA(config)# atmf virtual-crosslink id 5 ip 192.168.100.1
remote-id 10 remote-ip 192.168.200.1
```

At the remote site, run the commands:

```
siteB# configure terminal
siteB(config)# atmf virtual-crosslink id 10 ip 192.168.200.1
remote-id 5 remote-ip 192.168.100.1
```

To remove this virtual crosslink, run the following commands on the local site:

```
siteA# configure terminal
siteA(config)# no atmf virtual-crosslink id 5
```

On the remote site, run the commands:

```
siteB# configure terminal
siteB(config)# no atmf virtual-crosslink id 10
```

**Related commands**

atmf virtual-crosslink

show atmf links

switchport atmf-crosslink

**Command changes**

Version 5.4.7-0.3: command added

# atmf virtual-link

**Overview** This command creates one or more Layer 2 tunnels that enable AMF nodes to transparently communicate across a wide area network using Layer 2 connectivity protocols.

Once connected through the tunnel, the remote member will have the same AMF capabilities as a directly connected AMF member.

Use the **no** variant of this command to remove the specified virtual link.

**Syntax**

```
atmf virtual-link id <1-4094> ip <a.b.c.d> remote-id <1-4094>
remote-ip <a.b.c.d> [remote-area <area-name>]
```

```
atmf virtual-link id <1-4094> interface <interface-name>
remote-id <1-4094> remote-ip <a.b.c.d> [remote-area
<area-name>]
```

```
no atmf virtual-link id <1-4094>
```

| Parameter | Description |
|---|---|
| id <1-4094> | ID of the local tunnel point, in the range 1 to 4094. |
| ip <a.b.c.d> | Specify the local IP address of the local interface for the virtual-link (alternatively you can specify the interface's name, see below). |
| interface <interface-name> | Specify the local interface name for the virtual-link. This allows you to use a dynamic, rather than a static, local IP address. |
| remote-id<1-4094> | The ID of the (same) tunnel that will be applied by the remote node. Note that this must match the local-id that is defined on the remote node. This means that (for the same tunnel) the local and remote tunnel IDs are reversed on the local and remote nodes. |
| remote-ip <a.b.c.d> | The IP address of the remote node. |
| remote-area <area-name> | The name of the remote area connected to this virtual-link. |

**Mode** Global Configuration

**Usage notes** The Layer 2 tunnel that this command creates enables a local AMF session to appear to pass transparently across a Wide Area Network (WAN) such as the Internet. The addresses configured as the local and remote tunnel IP addresses must have IP connectivity to each other. If the tunnel is configured to connect a head office and branch office over the Internet, typically this would involve using some type of managed WAN service such as a site-to-site VPN. Tunnels are only supported using IPv4.

Configuration involves creating a local tunnel ID, a local IP address, a remote tunnel ID and a remote IP address. A reciprocal configuration is also required on the corresponding remote device. The local tunnel ID must be unique to the device on which it is configured.

If an interface acquires its IP address dynamically then the local side of the tunnel can be specified by using the interface's name instead of using its IP address. When using a dynamic local address the remote address of the other side of the virtual-link must be configured with either:

- the IP address of the NAT device the dynamically configured interface is behind, or
- 0.0.0.0, if the virtual-link is configured as a secure virtual-link.

For instructions on how to configure dynamic IP addresses on virtual-links, see the AMF Feature Overview and Configuration Guide.

The tunneled link may operate via external (non AlliedWare Plus) routers in order to provide wide area network connectivity. However in this configuration, the routers perform a conventional router to router connection. The protocol tunneling function is accomplished by the AMF nodes.

***NOTE:*** *AMF cannot achieve zero touch replacement of the remote device that terminates the tunnel connection, because you must pre-configure the local IP address and tunnel ID on that remote device.*

**Example 1** Use the following commands to create the tunnel shown in the figure below.

Figure 51-1: AMF virtual link example

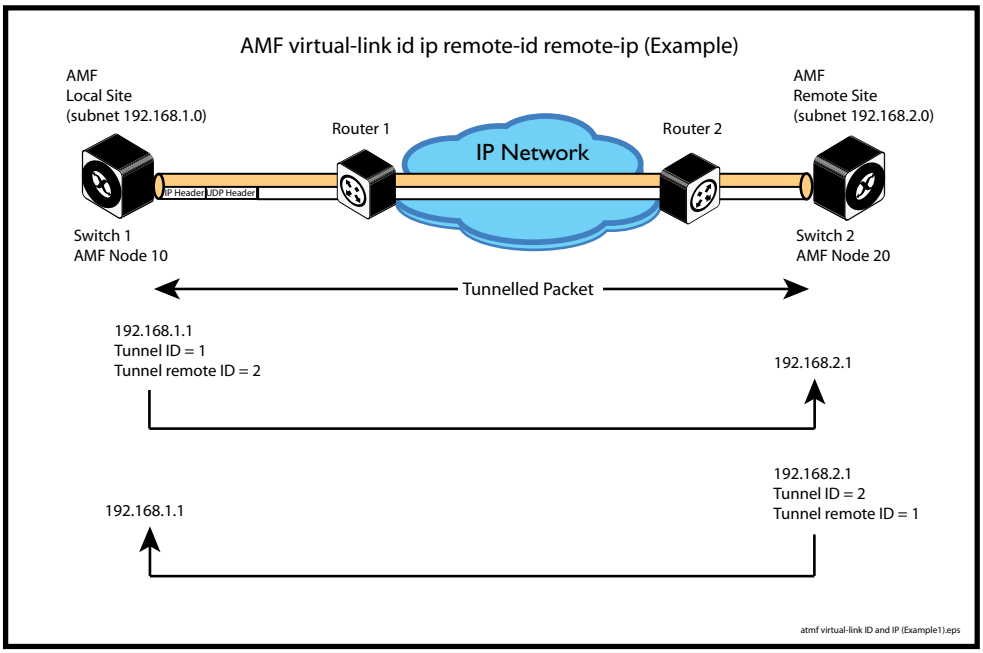


```
Node_10(config)# atmf virtual-link id 1 ip 192.168.1.1
remote-id 2 remote-ip 192.168.2.1
```

```
Node_20(config)# atmf virtual-link id 2 ip 192.168.2.1
remote-id 1 remote-ip 192.168.1.1
```

**Example 2** To set up an area virtual link to a remote site (assuming IP connectivity between the sites already), one site must run the following commands:

```
SiteA# configure terminal
SiteA(config)# atmf virtual-link id 5 ip 192.168.100.1
remote-id 10 remote-ip 192.168.200.1 remote-area SiteB-AREA
```

The second site must run the following commands:

```
SiteB# configure terminal
SiteB(config)# atmf virtual-link id 10 ip 192.168.200.1
remote-id 5 remote-ip 192.168.100.1 remote-area SiteA-AREA
```

Before you can apply the above **atmf virtual-link** command, you must configure the area names *SiteB-AREA* and *SiteA-AREA*.

**Related commands**

atmf virtual-link description

atmf virtual-link protection

show atmf

show atmf links

show atmf virtual-links

**Command changes** Version 5.4.9-0.1: **interface** parameter added

# atmf virtual-link description

**Overview** Use this command to add a description to an existing AMF virtual-link.

Use the **no** variant of this command to remove a description from an AMF virtual-link.

**Syntax**

```
atmf virtual-link id <1-4094> description <description>
no atmf virtual-link id <1-4094> description
```

| Parameter | Description |
|---|---|
| `id <1-4094>` | ID of the local tunnel point. |
| `<description>` | A description for the virtual-link. |

**Default** No description is set by default.

**Mode** Global Configuration

**Example** To add a description to the virtual-link with id '5', use the commands:

```
awplus# configure terminal
awplus(config)# atmf virtual-link id 5 description TO SITE B
```

To remove a description from the virtual-link with id '5', use the commands:

```
awplus# configure terminal
awplus(config)# no atmf virtual-link id 5
```

**Related commands**

atmf virtual-link

show atmf links

show atmf virtual-links

# atmf virtual-link protection

**Overview** Use this command to add protection to an existing AMF virtual-link. Secure AMF virtual-links encapsulate the L2TPv3 frames of the virtual-link with IPsec.

Use the **no** variant of this command to remove protection from an AMF virtual-link.

**Syntax**

```
atmf virtual-link id <1-4094> protection ipsec key [8]
<key-string>
```

```
no atmf virtual-link id <1-4094> protection
```

| Parameter | Description |
|---|---|
| `id` | Specify the link ID. |
| `<1-4094>` | Link ID in the range 1 to 4094, |
| `protection` | Protection is on for this link. |
| `ipsec` | Security provided using IPsec. |
| `key` | Set the shared key. |
| `8` | Specifies a string in an encrypted format instead of plain text. The running config will display the new password as an encrypted string even if password encryption is turned off. |
| `<key-string>` | Specify the shared key for the link. |

**Default** Protection is off by default.

**Mode** Global Configuration

**Usage notes** The following limitations need to be considered when creating secure virtual-links.

- Switch devices support a maximum of 20 downstream AMF nodes when using a secure virtual-link as an uplink.
- When there are two or more AMF members behind a shared NAT device, only one of the members will be able to use secure virtual-links.
- An AMF Multi-tenant environment supports a maximum cumulative total of 1200 secure virtual-links across all AMF containers.

Secure virtual-links are only supported on the following device listed in the table below. There is also a limit to the number of links these devices support.

| Device | Virtual-link Limit |
|---|---|
| AMF Cloud/ VAA | 300 |
| AR4050S<br>AR3050S<br>AR2050V<br>AR2010V | 60 |
| x220<br>x230/x230L<br>x310<br>x510/x510L<br>IX5-28GPX | 2 |

**Example**

To create and configure a virtual link with protection first create the virtual-link:

```
Host-A# configure terminal
Host-A(config)# atmf virtual-link id 1 ip 192.168.1.1 remote-id
2 remote-ip 192.168.2.1
```

Enable protection on the virtual link:

```
Host-A(config)# atmf virtual-link id 1 protection ipsec key
securepassword
```

Repeat these steps on the other side of the link:

```
Host-B(config)# atmf virtual-link id 2 ip 192.168.2.1 remote-id
1 remote-ip 192.168.1.1
Host-B(config)# atmf virtual-link id 2 protection ipsec key
securepassword
```

**Related commands**

atmf virtual-link

show atmf

show atmf links

show atmf virtual-links

**Command changes**

Version 5.4.9-0.1: command added

# atmf working-set

**Overview** Use this command to execute commands across an individually listed set of AMF nodes or across a named group of nodes.

Note that this command can only be run on a master node.

Use the **no** variant of this command to remove members or groups from the current working-set.

**Syntax**

```
atmf working-set {[<node-list>]|[group
{<group-list>|all|local|current}]}
```

```
no atmf working-set {[<node-list>]|[group <group-list>]}
```

| Parameter | Description |
|---|---|
| `<node-list>` | A comma delimited list (without spaces) of nodes to be included in the working-set. |
| `group` | The AMF group. |
| `<group-list>` | A comma delimited list (without spaces) of groups to be included in the working-set. Note that this can include either defined groups, or any of the Automatic, or Implicit Groups shown earlier in the bulleted list of groups. |
| `all` | All nodes in the AMF. |
| `local` | Local node<br>Running this command with the parameters **group local** will return you to the local prompt and local node connectivity. |
| `current` | Nodes in current list. |

**Mode** Privileged Exec

**Usage notes** You can put AMF nodes into groups by using the atmf group (membership) command.

This command opens a session on multiple network devices. When you change the working set to anything other than the local device, the prompt will change to the AMF network name, followed by the size of the working set, shown in square brackets. This command has to be run at privilege level 15.

In addition to the user defined groups, the following system assigned groups are automatically created:

- Implicit Groups
  - local: The originating node.
  - current: All nodes that comprise the current working-set.
  - all: All nodes in the AMF.

- Automatic Groups - These can be defined by hardware architecture, e.g. x510, x610, x8100, AR3050S or AR4050S, or by certain AMF nodal designations such as master.

Note that the Implicit Groups do not appear in show atmf group command output.

If a node is an AMF master it will be automatically added to the master group.

**Example 1** To add all nodes in the AMF to the working-set, use the command:

```
node1# atmf working-set group all
```

***NOTE:*** *This command adds the implicit group "all" to the working set, where "all" comprises all nodes in the AMF.*

This command displays an output screen similar to the one shown below:

```
=========================================
node1, node2, node3, node4, node5, node6:
=============================================

Working set join

ATMF_NETWORK_Name[6]#
```

**Example 2** To return to the local prompt, and connect to only the local node, use the command:

```
ATMF_Network_Name[6]# atmf working-set group local
node1#
```

The following table describes the meaning of the prompts in this example.

| Parameter | Description |
|---|---|
| ATMF_Network_Name | The name of the AMF network, as set by the atmf network-name command. |
| [6] | The number of nodes in the working-set. |
| node1 | The name of the local node, as set by the hostname command. |

# bridge-group

**Overview**

Use this command to connect an AMF container to a bridge created on a Virtual AMF Appliance (VAA) virtual machine. This allows the AMF container to connect to a physical network.

An AMF container is an isolated instance of AlliedWare Plus with its own network interfaces, configuration, and file system. The features available inside an AMF container are a sub-set of the features available on the host VAA. These features enable the AMF container to function as a uniquely identifiable AMF master and allows for multiple tenants (up to 60) to run on a single VAA host. See the AMF Feature Overview and Configuration Guide for more information on running multiple tenants on a single VAA host.

Use the **no** variant of this command to remove a bridge-group from an AMF container.

**Syntax**

```
bridge-group <bridge-id>
no bridge-group
```

| Parameter | Description |
|---|---|
| *<bridge-id>* | The ID of the bridge group to join, a number between 1 and 64. |

**Mode**

AMF Container Configuration

**Usage notes**

Each container has two virtual interfaces:

1) Interface eth0, used to connect to the AMF controller on the VAA host via an AMF area-link, and configured using this area-link command.

2) Interface eth1, used to connect to the outside world using a bridged L2 network link, and configured using the **bridge-group** command.

Before using this command, a bridge must be created with the same bridge-id on the VAA host using the **bridge <bridge-id>** command.

See the AMF Feature Overview and Configuration Guide for more information on configuring the bridge.

**Example**

To create a bridge group for AMF container “vac-wlg-1” and , use the commands:

```
awplus# configure terminal
awplus(config)# atmf container vac-wlg-1
awplus(config-atmf-container)# bridge-group 1
```

**Related commands**

atmf container

show atmf container

**Command changes**

Version 5.4.7-0.1: command added

# clear application-proxy threat-protection

**Overview** Use this command to clear the threat protection for a specified address.

**Syntax**

```
clear application-proxy threat-protection {<ip-address>|
<mac-address>|all}
```

| Parameter | Description |
|---|---|
| *<ip-address>* | The IPv4 address you wish to clear the threat for, in A.B.C.D format. |
| *<mac-address>* | The MAC address you wish to clear the threat for, in HHHH.HHHH.HHHH format. |
| `all` | Clear the threat for all IPv4 and MAC addresses. |

**Mode** Privileged Exec

**Example** To clear the threat for 10.34.199.117, use the command:

```
awplus# clear application-proxy threat-protection 10.34.199.117
```

**Related commands**

application-proxy quarantine-vlan

application-proxy threat-protection

application-proxy threat-protection send-summary

service atmf-application-proxy

show application-proxy threat-protection

**Command changes** Version 5.4.7-2.2: command added

# clear atmf links

**Overview**

Use this command with no parameters to manually reset all the AMF links on a device. You can optionally specify an interface or range of interfaces to reset the links on.

Certain events or topology changes can cause AMF links to be incorrect or outdated. Clearing the links forces AMF to relearn the information from neighboring nodes and create a fresh, correct, view of the network.

**Syntax**

```
clear atmf links [<interface-list>]
```

| Parameter | Description |
|---|---|
| *<interface-list>* | The interfaces or ports to perform the reset on. An interface-list can be:<br>• a switchport (e.g. port1.0.1)<br>• a static channel group (e.g. sa2)<br>• a dynamic (LACP) channel group (e.g. po2)<br>• a local port (e.g. of0)<br>• You can specify a continuous range of interfaces separated by a hyphen, or a comma-separated list (e.g. port1.0.1, port1.0.4-port1.0.18).<br>The specified interfaces must exist.<br>If this parameter is left out then all links of the specified type will be reset on the device. |

**Mode**

Privileged Exec

**Example**

To clear all AMF links on a device, use the following command:

```
awplus# clear atmf links
```

To clear all AMF links on port1.0.1 to port1.0.4 and static aggregator sa1, use the following command:

```
awplus# clear atmf links port1.0.1-port1.0.4,sa1
```

**Related commands**

clear atmf links virtual

show atmf links

**Command changes**

Version 5.4.8-2.1: command added

# clear atmf links virtual

**Overview**

Use this command with no parameters to manually reset all the AMF virtual links on a device. You can, optionally, specify a comma separated list of virtual links to reset.

Certain events or topology changes can cause AMF links to be incorrect or outdated. Clearing the links forces AMF to relearn the information from neighboring nodes and create a fresh, correct view of the network.

**Syntax**

```
clear atmf links virtual [<virtuallink-list>]
```

| Parameter | Description |
|---|---|
| *<virtuallink-list>* | A single, or list, of AMF virtual link identifiers to reset. This must be a comma separated list of links e.g. *vlink1, vlink2, vlink3*. Specifying a link range e.g *vlink1-vlink3* is not supported. |

**Mode**

Privileged Exec

**Example**

To clear all AMF virtual links on a device, use the following command:

```
awplus# clear atmf links virtual
```

To clear AMF virtual links vlink11 and vlink21, use the following command:

```
awplus# clear atmf links virtual vlink11,vlink22
```

**Related commands**

clear atmf links

show atmf links

**Command changes**

Version 5.4.8-2.1: command added

# clear atmf links statistics

**Overview** This command resets the values of all AMF link, port, and global statistics to zero.

**Syntax**

```
clear atmf links statistics
```

**Mode** Privilege Exec

**Example** To reset the AMF link statistics values, use the command:

```
node_1# clear atmf links statistics
```

**Related commands** show atmf links statistics

# clear atmf recovery-file

**Overview**

Use this command to delete all of a node's recovery files. It deletes the recovery files stored on:

- the local node,
- neighbor nodes, and
- external media (USB or SD card).

**Syntax**

```
clear atmf recovery-file
```

**Mode**

Privileged Exec

**Usage notes**

AMF recovery files are created for nodes with special links. Special links include:

- virtual links,
- area links terminating on an AMF master, and
- area virtual links terminating on an AMF master.

An AMF node with one of these special links pushes its startup configuration to its neighbors and to any attached external media. It then fetches and applies this configuration at recovery time. This configuration enables it to contact the AMF master and initiate a recovery.

Recovery files can become out of date if:

- a node's neighbor is off line when changes are made to its configuration, or
- when a node no longer contains a special link.

**Example**

To clear a node's recovery files, use the command:

```
node1# clear atmf recovery-file
```

**Output**

Figure 51-2: If AlliedWare Plus detects that a node contains a special link then the following message is displayed

```
node1#clear atmf recovery-file
% Warning: ATMF recovery files have been removed.
ATMF recovery may fail. Please save running-configuration.
```

**Related commands**

show atmf recovery-file

**Command changes**

Version 5.4.8-0.2: command added

# clear atmf secure-mode certificates

**Overview** Use this command to remove all certificates from an AMF member or master. AMF nodes will need to be re-authorized once this command has been run.

**Syntax**

```
clear atmf secure-mode certificates
```

**Mode** Privileged Exec

**Example** To clear all certificates from an AMF node, use the command:

```
awplus# clear atmf secure-mode certificates
```

If this is the only master on the network you will see the following warning:

```
% Warning: This node is the only master in the network!
All the nodes will become isolated and refuse to join any ATMF
network. The certificates on all the isolated nodes must be
cleared before rejoining an ATMF network will be possible.

To clear certificates a reboot of the device is required.
Clear certificates and Reboot ? (y/n):
```

On an AMF member you will see the following message:

```
To clear certificates a reboot of the device is required.
Clear certificates and Reboot ? (y/n):
```

**Related commands**

atmf authorize

atmf secure-mode

show atmf authorization

show atmf secure-mode certificates

**Command changes** Version 5.4.7-0.3: command added

# clear atmf secure-mode statistics

**Overview** Use this command to reset all secure mode statistics to 0.

**Syntax**

```
clear atmf secure-mode statistics
```

**Mode** Privileged Exec

**Example** To reset the AMF secure mode statistics information, use the command:

```
awplus# clear atmf secure-mode statistic
```

**Related commands**

show atmf secure-mode

show atmf secure-mode statistics

**Command changes** Version 5.4.7-0.3: command added

# clone (amf-provision)

**Overview**

This command sets up a space on the backup media for use with a provisioned node and copies into it almost all files and directories from a chosen backup or provisioned node.

Alternatively, you can set up a new, unique provisioned node by using the command create (amf-provision).

**Syntax**

`clone <source-nodename>`

| Parameter | Description |
|---|---|
| `<source-nodename>` | The name of the node whose configuration is to be copied for loading to the clone. |

**Mode**

AMF Provisioning

**Usage notes**

This command is only available on master nodes in the AMF network.

When using this command it is important to be aware of the following:

- A copy of *<media>*:atmf/*<atmf_name>*/nodes/*<source_node>*/flash will be made for the provisioned node and stored in the backup media.
- The directory *<node_backup_dir>*/flash/.config/ssh is excluded from the copy.
- All contents of *<root_backup_dir>*/nodes/*<nodename>* will be deleted or overwritten.
- Settings for the expected location of other provisioned nodes are excluded from the copy.

The active and backup configuration files are automatically modified in the following ways:

- The **hostname** command is modified to match the name of the provisioned node.
- The **stack virtual-chassis-id** command is removed, if present.

**Example**

To copy from the backup of 'device2' to create backup files for the new provisioned node 'device3' use the following command:

```
device1# atmf provision node device3
device1(atmf-provision)# clone device2
```

Figure 51-3: Sample output from the **clone** command

```
device1# atmf provision node device3
device1(atmf-provision)#clone device2
Copying...
Successful operation
```

To confirm that a new provisioned node has been cloned, use the command:

```
device1# show atmf backup
```

The output from this command is shown in the following figure, and shows the details of the new provisioned node 'device3'.

Figure 51-4: Sample output from the **show atmf backup** command

```
device1#show atmf backup

Scheduled Backup ...... Enabled
  Schedule ............ 1 per day starting at 03:00
  Next Backup Time .... 01 Oct 2018 03:00
Backup Bandwidth ...... Unlimited
Backup Media .......... USB (Total 7446.0MB, Free 7297.0MB)
Server Config .........
  Synchronization ..... Unsynchronized
    Last Run .......... -
   1 .................. Unconfigured
   2 .................. Unconfigured
Current Action ........ Idle
  Started ............ -
  Current Node ........ -

----------------------------------------------------------------
Node Name     Date         Time      In ATMF  On Media  Status
----------------------------------------------------------------
device3       -            -         No       Yes       Prov
device1       30 Sep 2018  00:05:49  No       Yes       Good
device2       30 Sep 2018  00:05:44  Yes      Yes       Good
```

**Related commands**

atmf provision (interface)

atmf provision node

configure boot config (amf-provision)

configure boot system (amf-provision)

copy (amf-provision)

create (amf-provision)

delete (amf-provision)

identity (amf-provision)

license-cert (amf-provision)

locate (amf-provision)

show atmf provision nodes

**Command changes**

Version 5.4.9-0.1: syntax change due to new AMF provisioning mode

# configure boot config (amf-provision)

**Overview**

This command sets the configuration file to use during the next boot cycle. This command can also set a backup configuration file to use if the main configuration file cannot be accessed for an AMF provisioned node. To unset the boot configuration or the backup boot configuration use the **no boot** command.

**Syntax**

```
configure boot config [backup] <file-path|URL>
configure no boot config [backup]
```

| Parameter | Description |
|---|---|
| backup | Specify that this is the backup configuration file. |
| *<file-path\|URL>* | The path or URL and name of the configuration file. |

**Default**

No boot configuration files or backup configuration files are specified for the provisioned node.

**Mode**

AMF Provisioning

**Usage notes**

When using this command to set a backup configuration file, the specified AMF provisioned node must exist. The specified file must exist in the flash directory created for the provisioned node in the AMF remote backup media.

**Examples**

To set the configuration file 'branch.cfg' on the AMF provisioned node 'node1', use the command:

```
MasterNodeName# atmf provision node node1
MasterNodeName(atmf-provision)# configure boot config
branch.cfg
```

To set the configuration file 'backup.cfg' as the backup to the main configuration file on the AMF provisioned node 'node1', use the command:

```
MasterNodeName(atmf-provision)# configure boot config backup
usb:/atmf/amf_net/nodes/node1/config/backup.cfg
```

To unset the boot configuration, use the command:

```
MasterNodeName(atmf-provision)# configure no boot config
```

To unset the backup boot configuration, use the command:

```
MasterNodeName(atmf-provision)# configure no boot config backup
```

**Related commands**

atmf provision (interface)

atmf provision node

clone (amf-provision)

configure boot system (amf-provision)

create (amf-provision)

delete (amf-provision)

identity (amf-provision)

license-cert (amf-provision)

locate (amf-provision)

show atmf provision nodes

**Command changes**

Version 5.4.9-0.1: syntax change due to new AMF provisioning mode

# configure boot system (amf-provision)

**Overview**

This command sets the release file that will load onto a specified provisioned node during the next boot cycle. This command can also set the backup release file to be loaded for an AMF provisioned node. To unset the boot system release file or the backup boot release file use the **no boot** command.

Use the **no** variant of this command to return to the default.

This command can only be run on AMF master nodes.

**Syntax**

```
configure boot system [backup] <file-path|URL>
configure no boot system [backup]
```

| Parameter | Description |
|---|---|
| *<file-path\|URL>* | The path or URL and name of the release file. |

**Default**

No boot release file or backup release files are specified for the provisioned node.

**Mode**

AMF Provisioning

**Usage notes**

When using this command to set a backup release file, the specified AMF provisioned node must exist. The specified file must exist in the flash directory created for the provisioned node in the AMF remote backup media.

**Examples**

To set the release file x930-5.4.9-0.1.rel on the AMF provisioned node 'node1', use the command:

```
MasterNodeName# atmf provision node node1
MasterNodeName(atmf-provision)# configure boot system
x930-5.4.9-0.1.rel
```

To set the backup release file x930-5.4.8-2.5.rel as the backup to the main release file on the AMF provisioned node 'node1', use the command:

```
MasterNodeName# atmf provision node node1
MasterNodeName(atmf-provision)# configure boot system backup
card:/atmf/amf_net/nodes/node1/flash/x930-5.4.8-2.5.rel
```

To unset the boot release, use the command:

```
MasterNodeName# atmf provision node node1
MasterNodeName(atmf-provision)# configure no boot system
```

To unset the backup boot release, use the command:

```
MasterNodeName# atmf provision node node1
MasterNodeName(atmf-provision)# configure no boot system backup
```

**Related commands**

atmf provision (interface)

atmf provision node

clone (amf-provision)

configure boot config (amf-provision)

create (amf-provision)

delete (amf-provision)

identity (amf-provision)

license-cert (amf-provision)

locate (amf-provision)

show atmf provision nodes

**Command changes**

Version 5.4.9-0.1: syntax change due to new AMF provisioning mode

# copy (amf-provision)

**Overview**

Use this command to copy configuration and release files for the node you are provisioning.

For more information about using the copy command see copy (filename) in the File and Configuration Management chapter.

**Syntax**

```
copy [force] <source-name> <destination-name>
```

| Parameter | Description |
|---|---|
| `force` | This parameter forces the copy command to overwrite the destination file, if it already exists, without prompting the user for confirmation. |
| *<source-name>* | The filename and path of the source file. See the Introduction of the File and Configuration Management chapter for valid syntax. |
| *<destination-name>* | The filename and path for the destination file. See Introduction of the File and Configuration Management chapter for valid syntax. |

**Mode**

AMF Provisioning

**Example**

To copy a configuration file named current.cfg from Node_4's Flash into the future_node directory, and set that configuration file to load onto future_node, use the following commands:

```
node_4# atmf provision node future_node
node_4(atmf-provision)# create
node_4(atmf-provision)# locate
node_4(atmf-provision)# copy flash:current.cfg
./future_node.cfg
node_4(atmf-provision)# configure boot config future_node.cfg
```

**Related commands**

atmf provision (interface)

atmf provision node

clone (amf-provision)

create (amf-provision)

delete (amf-provision)

locate (amf-provision)

show atmf provision nodes

**Command changes**

Version 5.4.9-2.1: command added

# create (amf-provision)

**Overview**

This command sets up an empty directory on the backup media for use with a provisioned node. This directory can have configuration and release files copied to it from existing devices. Alternatively, the configuration files can be created by the user.

An alternative way to create a new provisioned node is with the command clone (amf-provision).

This command can only run on AMF master nodes.

**Syntax**

```
create
```

**Mode**

AMF Provisioning

**Usage notes**

This command is only available on master nodes in the AMF network.

A date and time is assigned to the new provisioning directory reflecting when this command was executed. If there is a backup or provisioned node with the same name on another AMF master then the most recent one will be used.

**Example**

To create a new provisioned node named “device2” use the command:

```
device1# atmf provision node device2
device1(atmf-provision)# create
```

Running this command will create the following directories:

- <*media*>:atmf/<*atmf_name*>/nodes/<*node*>
- <*media*>:atmf/<*atmf_name*>/nodes/<*node*>/flash

To confirm the new node’s settings, use the command:

```
device1# show atmf backup
```

The output for the **show atmf backup** command is shown in the following figure, and shows details for the new provisioned node ‘device2’.

Figure 51-5: Sample output from the **show atmf backup** command

```
device1#show atmf backup

Scheduled Backup ...... Enabled
  Schedule ............ 1 per day starting at 03:00
  Next Backup Time .... 01 Oct 2018 03:00
Backup Bandwidth ...... Unlimited
Backup Media .......... USB (Total 7446.0MB, Free 7315.2MB)
Server Config .........
  Synchronization ..... Unsynchronized
    Last Run .......... -
   1 .................. Unconfigured
   2 .................. Unconfigured
Current Action ........ Idle
  Started ............ -
  Current Node ........ -

----------------------------------------------------------------
Node Name     Date         Time      In ATMF  On Media  Status
----------------------------------------------------------------
device2       -            -         No       Yes       Prov
device1       30 Sep 2018  00:05:49  No       Yes       Good
```

For instructions on how to configure on a provisioned node, see the AMF Feature Overview and Configuration Guide.

**Related commands**

atmf provision (interface)

atmf provision node

clone (amf-provision)

copy (amf-provision)

configure boot config (amf-provision)

configure boot system (amf-provision)

delete (amf-provision)

identity (amf-provision)

license-cert (amf-provision)

locate (amf-provision)

show atmf provision nodes

**Command changes**

Version 5.4.9-0.1: syntax change due to new AMF provisioning mode

# debug atmf

**Overview** This command enables the AMF debugging facilities, and displays information that is relevant (only) to the current node. The detail of the debugging displayed depends on the parameters specified.

If no additional parameters are specified, then the command output will display all AMF debugging information, including link events, topology discovery messages and all notable AMF events.

The **no** variant of this command disables either all AMF debugging information, or only the particular information as selected by the command's parameters.

**Syntax**

```
debug atmf
[link|crosslink|arealink|database|neighbor|error|all]
```

```
no debug atmf
[link|crosslink|arealink|database|neighbor|error|all]
```

| Parameter | Description |
|---|---|
| link | Output displays debugging information relating to uplink or downlink information. |
| crosslink | Output displays all crosslink events. |
| arealink | Output displays all arealink events. |
| database | Output displays only notable database events. |
| neighbor | Output displays only notable AMF neighbor events. |
| error | Output displays AMF error events. |
| all | Output displays all AMF events. |

**Default** All debugging facilities are disabled.

**Mode** User Exec and Global Configuration

**Usage notes** If no additional parameters are specified, then the command output will display all AMF debugging information, including link events, topology discovery messages and all notable AMF events.

***NOTE:*** *An alias to the **no** variant of this command is* *undebug atmf on page 2642.*

**Examples** To enable all AMF debugging, use the command:

```
node_1# debug atmf
```

To enable AMF uplink and downlink debugging, use the command:

```
node_1# debug atmf link
```

To enable AMF error debugging, use the command:

```
node_1# debug atmf error
```

**Related commands** no debug all

# debug atmf packet

**Overview** This command configures AMF Packet debugging parameters. The debug only displays information relevant to the current node. The command has following parameters:

**Syntax**

```
debug atmf packet [direction {rx|tx|both}] [level {1|2|3}]
[timeout <seconds>] [num-pkts <quantity>]
[filter {node <name>|interface <ifname>}
[pkt-type [1][2][3][4][5][6][7][8][9][10][11][12][13]]]
```

**Simplified Syntax**

| | |
|---|---|
| `debug atmf packet` | `[direction {rx\|tx\|both}]` |
| | `[level {[1][2\|3}]` |
| | `[timeout <seconds>]` |
| | `[num-pkts <quantity>]` |
| `debug atmf packet filter` | `[node <name>]` |
| | `[interface <ifname>]` |
| | `[pkt-type [1][2][3][4][5][6][7][8][9][10][11][12][13]]` |

***NOTE:*** *You can combine the syntax components shown, but when doing so, you must retain their original order.*

**Default** Level 1, both Tx and Rx, a timeout of 60 seconds with no filters applied.

***NOTE:*** *An alias to the **no** variant of this command - undebug atmf - can be found elsewhere in this chapter.*

**Mode** User Exec and Global Configuration

**Usage notes** If no additional parameters are specified, then the command output will apply a default selection of parameters shown below:

| Parameter | Description |
|---|---|
| `direction` | Sets debug to packet received, transmitted, or both |
| `rx` | packets received by this node |
| `tx` | Packets sent from this node |
| `1` | AMF Packet Control header Information, Packet Sequence Number. Enter 1 to select this level. |
| `2` | AMF Detailed Packet Information. Enter 2 to select this level. |
| `3` | AMF Packet HEX dump. Enter 3 to select this level. |
| `timeout` | Sets the execution timeout for packet logging |

| Parameter | Description |
|---|---|
| *<seconds>* | Seconds |
| num-pkts | Sets the number of packets to be dumped |
| *<quantity>* | The actual number of packets |
| filter | Sets debug to filter packets |
| node | Sets the filter on packets for a particular Node |
| *<name>* | The name of the remote node |
| interface | Sets the filter to dump packets from an interface (portx.x.x) on the local node |
| *<ifname>* | Interface port or virtual-link |
| pkt-type | Sets the filter on packets with a particular AMF packet type |
| 1 | Crosslink Hello BPDU packet with crosslink links information. Enter 1 to select this packet type. |
| 2 | Crosslink Hello BPDU packet with downlink domain information. Enter 2 to select this packet type. |
| 3 | Crosslink Hello BPDU packet with uplink information. Enter 3 to select this packet type. |
| 4 | Downlink and uplink hello BPDU packets. Enter 4 to select this packet type. |
| 5 | Non broadcast hello unicast packets. Enter 5 to select this packet type. |
| 6 | Stack hello unicast packets. Enter 6 to select this packet type. |
| 7 | Database description. Enter 7 to select this packet type. |
| 8 | DBE request. Enter 8 to select this packet type. |
| 9 | DBE update. Enter 9 to select this packet type. |
| 10 | DBE bitmap update. Enter 10 to select this packet type. |
| 11 | DBE acknowledgment. Enter 11 to select this packet type. |
| 12 | Area Hello Packets. Enter 12 to select this packet type. |
| 13 | Gateway Hello Packets. Enter 13 to select this packet type. |

**Examples**

To set a packet debug on node 1 with level 1 and no timeout, use the command:

```
node_1# debug atmf packet direction tx timeout 0
```

To set a packet debug with level 3 and filter packets received from AMF node 1:

```
node_1# debug atmf packet direction tx level 3 filter node_1
```

To enable send and receive 500 packets only on vlink1 for packet types 1, 7, and 11, use the command:

```
node_1# debug atmf packet num-pkts 500 filter interface vlink1
pkt-type 1 7 11
```

This example applies the **debug atmf packet** command and combines many of its options:

```
node_1# debug atmf packet direction rx level 1 num-pkts 60
filter node x930 interface port1.0.1 pkt-type 4 7 10
```

# delete (amf-provision)

**Overview** This command deletes files that have been created for loading onto a provisioned node. It can only be run on master nodes.

**Syntax**

```
delete
```

**Mode** AMF Provisioning

**Usage notes** This command is only available on master nodes in the AMF network. The command will only work if the provisioned node specified in the command has already been set up (although the device itself is still yet to be installed). Otherwise, an error message is shown when the command is run.

You may want to use the **delete** command to delete a provisioned node that was created in error or that is no longer needed.

This command cannot be used to delete backups created by the AMF backup procedure. In this case, use the command atmf backup delete to delete the files.

***NOTE:*** *This command allows provisioned entries to be deleted even if they have been referenced by the atmf provision (interface) command, so take care to only delete unwanted entries.*

**Example** To delete backup files for a provisioned node named device3 use the command:

```
device1# atmf provision node device3
device1(atmf-provision)# delete
```

To confirm that the backup files for provisioned node device3 have been deleted use the command:

```
device1# show atmf backup
```

The output should show that the provisioned node device3 no longer exists in the backup file, as shown in the figure below:

Figure 51-6: Sample output showing the **show atmf backup** command

```
device1#show atmf backup

Scheduled Backup ...... Enabled
  Schedule ............ 1 per day starting at 03:00
  Next Backup Time .... 01 Oct 2016 03:00
Backup Bandwidth ...... Unlimited
Backup Media .......... USB (Total 7446.0MB, Free 7297.0MB)
Server Config .........
  Synchronization ..... Unsynchronized
    Last Run .......... -
   1 .................. Unconfigured
   2 .................. Unconfigured
Current Action ........ Idle
  Started ............ -
  Current Node ........ -

----------------------------------------------------------------
Node Name     Date         Time      In ATMF  On Media  Status
----------------------------------------------------------------
device1       30 Sep 2016  00:05:49  No       Yes       Good
device2       30 Sep 2016  00:05:44  Yes      Yes       Good
```

**Related commands**

atmf provision (interface)

atmf provision node

clone (amf-provision)

configure boot config (amf-provision)

configure boot system (amf-provision)

create (amf-provision)

identity (amf-provision)

license-cert (amf-provision)

locate (amf-provision)

show atmf provision nodes

**Command changes**

Version 5.4.9-0.1: syntax change due to new AMF provisioning mode

# discovery

**Overview** Use this command to specify how AMF learns about guest nodes.

AMF nodes gather information about guest nodes by using one of two internally defined discovery methods: static or dynamic.

With dynamic learning (the default method), AMF learns IP address and MAC addresses of guest nodes from LLDP or DHCP snooping. Dynamic learning is only supported when using IPv4. For IPv6, use static learning.

With static learning, you use the switchport atmf-guestlink command to specify the guest class name and IP address of the guest node attached to each individual switch port. AMF then learns the MAC addresses of each of the guests of that class from ARP or Neighbor discovery tables.

If you are using the static method, ensure that you have configured the appropriate class type for each of your statically discovered guest nodes.

The **no** variant of this command returns the discovery method to **dynamic**.

**Syntax**

```
discovery [static|dynamic]
no discovery
```

| Parameter | Description |
|---|---|
| `static` | Statically assigned. |
| `dynamic` | Learned from DCHCP Snooping or LLDP. |

**Default** Dynamic

**Mode** AMF Guest Configuration

**Usage notes** This command is one of several modal commands that are configured and applied for a specific guest-class (mode). Its settings are automatically applied to a guest-node link by the switchport atmf-guestlink command.

***NOTE:*** *AMF guest nodes are not supported on ports using the OpenFlow protocol.*

**Example 1** To configure the discovery of the guest-class camera to operate statically, use the following commands:

```
Node1# configure terminal
Node1(config)# atmf guest-class camera
Node1(config-atmf-guest)# discovery static
```

**Example 2** To return the discovery method for the guest class TQ4600-1 to its default of **dynamic**, use the following commands:

```
Node1# configure terminal
Node1(config)# atmf guest-class TQ4600-1
Node1(config-atmf-guest)# no discovery
```

**Related commands**

atmf guest-class

switchport atmf-guestlink

show atmf links guest

show atmf nodes

# description (amf-container)

**Overview**

Use this command to set the description on an AMF container on a Virtual AMF Appliance (VAA).

An AMF container is an isolated instance of AlliedWare Plus with its own network interfaces, configuration, and file system. The features available inside an AMF container are a sub-set of the features available on the host VAA. These features enable the AMF container to function as a uniquely identifiable AMF master and allows for multiple tenants (up to 60) to run on a single VAA host. See the AMF Feature Overview and Configuration Guide for more information on running multiple tenants on a single VAA host.

Use the **no** variant of this command to remove the description from an AMF container.

**Syntax**

```
description <description>
no description
```

| Parameter | Description |
|---|---|
| *<description>* | Enter up to 128 characters of text describing the AMF container. |

**Mode**

AMF Container Configuration

**Example**

To set the description for AMF container “vac-wlg-1” to “Wellington area”, use the commands:

```
awplus# configure terminal
awplus(config)# atmf container vac-wlg-1
awplus(config-atmf-container)# description Wellington area
```

To remove the description for AMF container “vac-wlg-1”, use the commands:

```
awplus# configure terminal
awplus(config)# atmf container vac-wlg-1
awplus(config-atmf-container)# no description
```

**Related commands**

atmf container

show atmf container

**Command changes**

Version 5.4.7-0.1: command added

# erase factory-default

**Overview**

This command erases all data from NVS and all data from flash **except** the following:

- the boot release file (a .rel file) and its release setting file
- all license files
- the latest GUI release file

The device is then rebooted and returned to its factory default condition. The device can then be used for AMF automatic node recovery.

**Syntax**

```
erase factory-default
```

**Mode**

Privileged Exec

**Usage notes**

This command is an alias to the atmf cleanup command.

**Example**

To erase data, use the command:

```
Node_1# erase factory-default
This command will erase all NVS, all flash contents except for
the boot release, a GUI resource file, and any license files,
and then reboot the switch. Continue? (y/n):y
```

**Related commands**

atmf cleanup

# http-enable

**Overview**

This command is used to enable GUI access to a guest node. When **http-enable** is configured, the port number is set to its default of 80. If the guest node is using a different port for HTTP, you can configure this using the **port** parameter.

This command is used to inform the GUI that this device has an HTTP interface at the specified port number so that a suitable URL can be provided to the user.

Use the **no** variant of this command to disable HTTP.

**Syntax**

```
http-enable [port <port-number>]
no http-enable
```

| Parameter | Description |
|---|---|
| `port` | TCP port number. |
| `<port-number>` | The port number to be configured. |

**Default**

Not set

**Mode**

AMF Guest Configuration

**Usage notes**

If **http-enable** is selected without a **port** parameter the port number will default to 80.

**Example**

To enable HTTP access to a guest node on port 80 (the default), use the following commands:

```
node1# configure terminal
node1(config)# atmf guest-class Camera
node1(config-atmf-guest)# http-enable
```

To enable HTTP access to a guest node on port 400, use the following commands:

```
node1# configure terminal
node1(config)# atmf guest-class Camera
node1(config-atmf-guest)# http-enable port 400
```

To disable HTTP access to a guest node, use the following commands:

```
node1# configure terminal
node1(config)# atmf guest-class Camera
node1(config-atmf-guest)# no http-enable
```

**Related commands**

atmf guest-class

switchport atmf-guestlink

show atmf links guest

## show atmf nodes

# identity (amf-provision)

**Overview**

Use this command to create an identity token for provisioning an isolated AMF node. An isolated node is an AMF member that is only connected to the rest of the AMF network via a virtual-link.

This command allows these nodes, which have no AMF neighbors, to be identified for provisioning purposes. They are identified using an identity token which is based on either the next-hop MAC address of the provisioned node, or the serial number of the device being provisioned. This identity token is stored on the AMF master.

Use the **no** variant of this command to remove the identity token for a node.

**Syntax**

```
identity mac-address <mac-address> prefix
<ip-address/prefix-length>
```

```
identity serial-number <serial-number> prefix
<ip-address/prefix-length>
```

```
no identity
```

| Parameter | Description |
|---|---|
| `mac-address` | Specify the next-hop MAC address of the device being provisioned. |
| `<mac-address>` | MAC address of the port the provisioned node is connected to, in the format xxxx.xxxx.xxxx. |
| `serial-number` | Specify the serial number of the device to be provisioned. |
| `<serial-number>` | Serial number of the device that is being provisioned. |
| `prefix` | IPv4 address, and prefix length, of the virtual-link interface on the isolated node |
| `<ip-address/ prefix-length>` | IPv4 address, and prefix length, in A.B.C.D/M format. |

**Mode**

AMF Provisioning

**Usage notes**

To provision an isolated node, first create a configuration for the node using the create (amf-provision) and/or the clone (amf-provision) commands.

Then create an identity token for the provisioned node by either specifying its next-hop MAC address or by specifying the serial number of the replacement device. The advantage of using the next-hop MAC address is that any device, regardless of its serial number, can be added to the network but using the serial number maybe preferred in situations where the next-hop MAC address is not easy to obtain.

The atmf recovery-server option must be enabled on the AMF master before attempting to provision the device. This option allows the AMF master to process recovery requests from isolated AMF nodes.

See the AMF Feature Overview and Configuration Guide for information on preparing your network for recovering or provisioning isolated nodes.

**Example**

To create a identity token on your AMF master for a device named "my-x930" with serial number "A10064A172100008", use the command:

```
awplus# atmf provision node my-x930
awplus(atmf-provision)# identity serial-number
A10064A172100008 prefix 192.168.2.25/24
```

To create a identity token on your AMF master for a device named "my-x930" with next-hop MAC address "0000.cd28.0880", use the command:

```
awplus# atmf provision node my-x930
awplus(atmf-provision)# identity mac-address 0000.cd28.0880
prefix 192.168.2.25/24
```

To delete the identity token from your AMF master for a device named "my-x930", use the command:

```
awplus# atmf provision node my-x930
awplus(atmf-provision)# no identity
```

**Related commands**

atmf cleanup

atmf provision (interface)

atmf provision node

atmf recovery-server

atmf virtual-link

clone (amf-provision)

configure boot config (amf-provision)

configure boot system (amf-provision)

create (amf-provision)

delete (amf-provision)

license-cert (amf-provision)

locate (amf-provision)

show atmf provision nodes

**Command changes**

Version 5.4.9-0.1: syntax change due to new AMF provisioning mode

Version 5.4.7-2.1: command added

# license-cert (amf-provision)

**Overview**

This command is used to set up the license certificate for a provisioned node.

The certificate file usually has all the license details for the network, and can be stored anywhere in the network. This command makes a hidden copy of the certificate file and stores it in the space set up for the provisioned node on AMF backup media.

For node provisioning, the new device has not yet been part of the AMF network, so the user is unlikely to know its product ID or its MAC address. When such a device joins the network, assuming that this command has been applied successfully, the copy of the certificate file will be applied automatically to the provisioned node.

Once the new device has been resurrected on the network and the certificate file has been downloaded to the provisioned node, the hidden copy of the certificate file is deleted from AMF backup media.

Use the **no** variant of this command to set it back to the default.

This command can only be run on AMF master nodes.

**Syntax**

```
license-cert <file-path|URL>
no license-cert
```

| Parameter | Description |
|---|---|
| *<file-path\|URL>* | The name of the certificate file. This can include the file-path of the file. |

**Default**

No license certificate file is specified for the provisioned node.

**Mode**

AMF Provisioning

**Usage notes**

This command is only available on master nodes in the AMF network. It will only operate if the provisioned node specified in the command has already been set up, and if the license certification is present in the backup file. Otherwise, an error message is shown when the command is run.

**Example 1**

To apply the license certificate ‘cert1.txt’ stored on a TFTP server for AMF provisioned node “device2”, use the command:

```
device1# atmf provision node device2
device1(atmf-provision)# license-cert
tftp://192.168.1.1/cert1.txt
```

**Example 2**

To apply the license certificate ‘cert2.txt’ stored in the AMF master's flash directory for AMF provisioned node ‘host2’, use the command:

```
device1# atmf provision node host2
device1(atmf-provision)# license-cert /cert2.txt
```

To confirm that the license certificate has been applied to the provisioned node, use the command show atmf provision nodes. The output from this command is shown below, and displays license certification details in the last line.

Figure 51-7: Sample output from the **show atmf provision nodes** command

```
device1#show atmf provision nodes

ATMF Provisioned Node Information:

Backup Media .............: SD (Total 3827.0MB, Free 3481.1MB)

Node Name                 : device2
Date & Time               : 06-Oct-2016 & 23:25:44
Provision Path            : card:/atmf/nodes

Boot configuration :
Current boot image        : x510-5.4.6-1.4.rel (file exists)
Backup  boot image        : x510-5.4.6-1.3.rel (file exists)
Default boot config       : flash:/default.cfg (file exists)
Current boot config       : flash:/abc.cfg (file exists)
Backup  boot config       : flash:/xyz.cfg (file exists)

Software Licenses :
Repository file           : ./.configs/.sw_v2.lic
                          : ./.configs/.swfeature.lic
Certificate file          : card:/atmf/lok/nodes/awplus1/flash/.atmf-lic-cert
```

**Related commands**

atmf provision (interface)

atmf provision node

clone (amf-provision)

configure boot config (amf-provision)

configure boot system (amf-provision)

create (amf-provision)

delete (amf-provision)

identity (amf-provision)

locate (amf-provision)

show atmf provision nodes

**Command changes**

Version 5.4.9-0.1: syntax change due to new AMF provisioning mode

# locate (amf-provision)

**Overview**

This command changes the present working directory to the directory of a provisioned node. This makes it easier to edit files and create a unique provisioned node in the backup.

This command can only be run on AMF master nodes.

***NOTE:*** *We advise that after running this command, you return to a known working directory, typically flash.*

**Syntax**

`locate`

**Mode**

AMF Provisioning

**Example**

To change the working directory that happens to be on device1 to the directory of provisioned node device2, use the following command:

```
device1# atmf provision node device2
device1[atmf-provision]# locate
```

The directory of the node device2 should now be the working directory. You can use the command pwd to check this, as shown in the following figure.

Figure 51-8: Sample output from the **pwd** command

```
device2#pwd
card:/atmf/building_2/nodes/device2/flash
```

The output above shows that the working directory is now the flash of device2.

**Related commands**

atmf provision (interface)

atmf provision node

clone (amf-provision)

configure boot config (amf-provision)

configure boot system (amf-provision)

copy (amf-provision)

create (amf-provision)

delete (amf-provision)

identity (amf-provision)

license-cert (amf-provision)

locate (amf-provision)

pwd

show atmf provision nodes

**Command changes** Version 5.4.9-0.1: syntax change due to new AMF provisioning mode

# log event-host

**Overview** Use this command to set up an external host to log AMF topology events through Vista Manager. This command is run on the Master device.

Use the **no** variant of this command to disable log events through Vista Manager.

**Syntax**

```
log event-host [<ipv4-addr>|<ipv6-addr>] atmf-topology-event
no log event-host [<ipv4-addr>|<ipv6-addr>] atmf-topology-event
```

| Parameter | Description |
|---|---|
| *<ipv4-addr>* | ipv4 address of the event host |
| *<ipv6-addr>* | ipv6 address of the event host |

**Default** Log events are disabled by default.

**Mode** Global Configuration

**Usage notes** Event hosts are set so syslog sends the messages out as they come.

Note that there is a difference between log event and log host messages:

- Log event messages are sent out as they come by syslog
- Log host messages are set to wait for a number of messages (20) to send them out together for traffic optimization.

**Example** To enable Node 1 to log event messages from host IP address 192.0.2.31, use the following commands:

```
Node1# configure terminal
Node1(config)# log event-host 192.0.2.31 atmf-topology-event
```

To disable Node 1 to log event messages from host IP address 192.0.2.31, use the following commands:

```
Node1# configure terminal
Node1(config)# no log event-host 192.0.2.31 atmf-topology-event
```

**Related commands** atmf topology-gui enable

# login-fallback enable

**Overview**

Use this command to enable login fallback on TQ model AMF guest nodes.This allows AMF to try the factory default username and password if the guest node's saved username and password fail.

Use the **no** variant of this command to disable login fallback.

**Syntax**

```
login-fallback enable
no login-fallback enable
```

**Default**

Disabled

**Mode**

AMF Guest Configuration

**Usage notes**

This feature is only supported on TQ model guest nodes.

Login fallback means: if a guest node's saved username and password fail, AMF will try to connect to the node using the factory default username and password (manager/friend). When a new TQ replaces an existing TQ, this allows the new TQ to be discovered and managed as an AMF guest node. AMF can then start the AMF guest node recovery procedure.

**Example**

To use the login fallback feature, first create an AMF guest class for TQ model APs. Then enable the login fall back feature.

For example, to enable login fallback on the guest-class AT-TQ5k, use the commands:

```
node1#configuration terminal
node1(config)#atmf guest-class AT-TQ5k
node1(config-atmf-guest)#login-fallback enable
node1(config-atmf-guest)#end
node1#
```

**Related commands**

atmf guest-class

modeltype

switchport atmf-guestlink

show atmf links guest

**Command changes**

Version 5.5.0-1.1: command added

# modeltype

**Overview**

This command sets the expected model type of the guest node. The model type will default to **other** if nothing is set.

Use the **no** variant of this command to reset the model type to **other**.

**Syntax**

```
modeltype {alliedware|aw+|onvif|tq|other}
no modeltype
```

| Parameter | Description |
|---|---|
| alliedware | A legacy Allied Telesis operating system. |
| aw+ | The Allied Telesis AlliedWare Plus operating system. |
| onvif | ONVIF (Open Network Video Interface Forum) Profile Q devices |
| tq | An Allied Telesis TQ Series wireless access point. |
| other | Used where the model type is outside the above definitions. |

**Default**

Default to **other**

**Mode**

AMF Guest Configuration

**Examples**

To assign the model type **tq** to the guest-class called 'tq_device', use the commands:

```
node1# configure terminal
node1(config)# atmf guest-class tq_device
node1(config-atmf-guest)# modeltype tq
```

To remove the model type **tq** from the guest-class called 'tq_device', and reset it to the default of **other**, use the commands:

```
node1# configure terminal
node1(config)# atmf guest-class tq_device
node1(config-atmf-guest)# no modeltype
```

**Related commands**

atmf guest-class

switchport atmf-guestlink

show atmf links guest

**Command changes**

Version 5.4.9-2.1: **onvif** parameter added

# service atmf-application-proxy

**Overview**

Use this command to enable the AMF Application Proxy service. This service distributes messages across all AMF nodes.

Currently this is used for threat protection. When an AMF Security (AMF-Sec) Controller detects a threat, it issues a request to block the address the threat originated from. The AMF Application Proxy service distributes this message to all AMF nodes. An AMF master accepts this block request and instructs the subordinate AMF node to block the relevant device.

Use the **no** variant of this command to disable the AMF Application Proxy service.

**Syntax**

```
service atmf-application-proxy
no service atmf-application-proxy
```

**Default**

The AMF Application Proxy service is disabled by default.

**Mode**

Global Configuration

**Usage notes**

The AMF master maintains a list of all threats and will send this list to any AMF node, or VCS member, when it boots and joins the AMF network.

In order for this to work the follow must be configured:

- the AMF Application Proxy service on all AMF nodes that need to receive the messages.
- the Hypertext Transfer Protocol (HTTP) service on all nodes that are running the AMF Application Proxy service (see service http).

**Example**

To enable the AMF Application Proxy service, use the commands

```
awplus# configure terminal
awplus(config)# service atmf-application-proxy
```

To disable the AMF Application Proxy service, use the commands

```
awplus# configure terminal
awplus(config)# no service atmf-application-proxy
```

**Related commands**

application-proxy threat-protection

application-proxy whitelist server

clear application-proxy threat-protection

show application-proxy threat-protection

**Command changes**

Version 5.4.7-2.2: command added

# show application-proxy threat-protection

**Overview** Use this command to list all the IP addresses blocked by the AMF Application Proxy service. It also shows the global threat-detection configuration.

**Syntax**

```
show application-proxy threat-protection [all]
```

| Parameter | Description |
|---|---|
| `all` | Include information for non-local blocks. |

**Mode** Privileged Exec

**Example** To list the addresses blocked by the AMF Application Proxy service, use the command:

```
awplus# show application-proxy threat-protection
```

**Output** Figure 51-9: Example output from **show application-proxy threat-protection**

```
awplus#show application-proxy threat-protection
Quarantine Vlan            : vlan200
Global IP-Filter           : Enabled
IP-Filter Limit Exceeded   : 0
Redirect-URL               : http://my.dom/help.html

Client IP        Interface    MAC Address     VLAN      Action
-----------------------------------------------------------------
10.34.199.110    -            -               -      link-down
10.34.199.116    port1.0.3    001a.eb93.ec5d  1           drop
10.1.179.1       *            *               *      ip-filter
...
```

Table 51-1: Parameters in the output from **show application-proxy threat-protection**

| Parameter | Description |
|---|---|
| `Quarantine Vlan` | The name of the quarantine VLAN. |
| `Global IP-Filter` | The status of global IP filtering. |
| `IP-Filter Limit Exceeded` | The number of times an ACL failed to be installed due to insufficient space. |
| `Redirect-URL` | The URL a blocked user is redirected to. |

**Related commands** application-proxy quarantine-vlan

application-proxy threat-protection

clear application-proxy threat-protection

service atmf-application-proxy

**Command changes**

Version 5.4.7-2.2: command added

# show application-proxy whitelist advertised-address

**Overview** Use this command to show the Layer 3 interface and its IPv4 address that is advertised as the application-proxy whitelist address.

**Syntax**

```
show application-proxy whitelist advertised-address
```

**Mode** Privileged Exec

**Example** To display the interface and IPv4 address advertised as the application-proxy whitelist address, use the command:

```
awplus# show application-proxy whitelist advertised-address
```

**Output** Figure 51-10: Example output from **show application-proxy whitelist advertised-address**

```
awplus#show application-proxy whitelist advertised-address
ATMF Application Proxy Whitelist advertised-address:
  Interface  : vlan1001
  IP address : 10.34.16.5
```

**Related commands** application-proxy whitelist advertised-address

application-proxy whitelist server

**Command changes** Version 5.4.9-1.1: command added

# show application-proxy whitelist interface

**Overview** Use this command to display the status of port authentication on the specified interface.

**Syntax**

```
show application-proxy whitelist interface [<interface-list>]
```

| Parameter | Description |
|---|---|
| *<interface-list>* | The interfaces or ports to display information about. An interface-list can be:<br>• a switchport (e.g. port1.0.4)<br>• a static channel group (e.g. sa2)<br>• a dynamic (LACP) channel group (e.g. po2)<br>• a continuous range of ports separated by a hyphen (e.g. port1.0.1-1.0.4)<br>• a comma-separated list (e.g. port1.0.1,port1.0.3-1.0.4). Do not mix port types in the same list.<br>The specified interface must exist. |

**Mode** Privileged Exec

**Example** To display the port authentication information for all interfaces, use the command:

```
awplus# show application-proxy whitelist interface
```

To display the port authentication information for port1.0.4, use the command

```
awplus# show application-proxy whitelist interface port1.0.4
```

**Output** Figure 51-11: Example output from **show application-proxy whitelist interface**

```
awplus#sh application-proxy whitelist interface
Authentication Info for interface port1.0.1
  portEnabled: false - portControl: Auto
  portStatus: Unknown
  reAuthenticate: disabled
  reAuthPeriod: 3600
  PAE: quietPeriod: 60 - maxReauthReq: 2 - txPeriod: 30
  PAE: connectTimeout: 30
  BE: suppTimeout: 30 - serverTimeout: 30
  CD: adminControlledDirections: in
  KT: keyTxEnabled: false
  critical: disabled
  guestVlan: disabled
  guestVlanForwarding:
    none
  authFailVlan: disabled
  dynamicVlanCreation: disabled
  multiVlanSession: disabled
  hostMode: single-host
  dot1x: disabled
  authMac: enabled
    method: PAP
    scheme: mac
    reauthRelearning: disabled
  authWeb: disabled
  twoStepAuthentication:
    configured: disabled
    actual: disabled
  supplicantMac: none
  supplicantIpv4: none
Authentication Info for interface port1.0.2
...
```

**Related commands**

application-proxy whitelist enable

application-proxy whitelist server

show application-proxy whitelist server

show application-proxy whitelist supplicant

**Command changes** Version 5.4.9-0.1: command added

# show application-proxy whitelist server

**Overview** Use this command to display the external RADIUS server details for the application-proxy whitelist feature.

**Syntax**

```
show application-proxy whitelist server
```

**Mode** Privileged Exec

**Example** To display the external RADIUS server details for the application-proxy whitelist feature, use the command:

```
awplus# show application-proxy whitelist server
```

**Output** Figure 51-12: Example output from **show application-proxy whitelist server**

```
awplus#show application-proxy whitelist server

Application Proxy Whitelist Details:

External Server Details:
 IP: 192.168.1.10
 Port: 2083
  Protection: TLS
  Trustpoint: None (Authentication disabled)

Proxy Details:
 IP: 172.31.0.5
 Status: Alive
```

**Related commands**

application-proxy whitelist enable

application-proxy whitelist server

show application-proxy whitelist interface

show application-proxy whitelist supplicant

**Command changes** Version 5.4.9-0.1: command added

# show application-proxy whitelist supplicant

**Overview** Use this command to display the current configuration and status for each supplicant attached to an application-proxy whitelist port.

**Syntax**

```
show application-proxy whitelist supplicant [interface
<interface-list>|<mac-addr>|brief]
```

| Parameter | Description |
|---|---|
| `interface <interface-list>` | The interfaces or ports to display information about. An interface-list can be:<br>• a switchport (e.g. port1.0.4)<br>• a static channel group (e.g. sa2)<br>• a dynamic (LACP) channel group (e.g. po2)<br>• a continuous range of ports separated by a hyphen (e.g. port1.0.1-1.0.4)<br>• a comma-separated list (e.g. port1.0.1,port1.0.3-1.0.4). Do not mix port types in the same list.<br>The specified interface must exist. |
| `<mac-addr>` | MAC (hardware) address of the supplicant.Entry format is HHHH.HHHH.HHHH (hexadecimal) |
| `brief` | Brief summary of the supplicant state. |

**Mode** Privileged Exec

**Example** To display the supplicant information for all ports, use the command:

```
awplus# show application-proxy whitelist supplicant
```

To display the supplicant information for port1.0.4, use the command:

```
awplus# show application-proxy whitelist supplicant interface
port1.0.4
```

**Output** Figure 51-13: Example output from **show application-proxy whitelist supplicant**

```
awplus#show application-proxy whitelist supplicant
Interface port1.0.4
  authenticationMethod: dot1x/mac/web
  Two-Step Authentication
    firstMethod: mac
    secondMethod: dot1x/web
  totalSupplicantNum: 1
  authorizedSupplicantNum: 1
    macBasedAuthenticationSupplicantNum: 0
    dot1xAuthenticationSupplicantNum: 0
    webBasedAuthenticationSupplicantNum: 1
    otherAuthenticationSupplicantNum: 0

  Supplicant name: test
  Supplicant address: 001c.233e.e15a
    authenticationMethod: WEB-based Authentication
    Two-Step Authentication:
      firstAuthentication: Pass - Method: mac
      secondAuthentication: Pass - Method: web
    portStatus: Authorized - currentId: 1
    abort:F fail:F start:F timeout:F success:T
    PAE: state: Authenticated - portMode: Auto
    PAE: reAuthCount: 0 - rxRespId: 0
    PAE: quietPeriod: 60 - maxReauthReq: 2
    BE: state: Idle - reqCount: 0 - idFromServer: 0
    CD: adminControlledDirections: in operControlledDirections: in
    CD: bridgeDetected: false
    KR: rxKey: false
    KT: keyAvailable: false - keyTxEnabled: false
    RADIUS server group (auth): radius
    RADIUS server (auth): 192.168.1.40
...
```

**Related commands**

application-proxy whitelist enable

application-proxy whitelist server

show application-proxy whitelist interface

show application-proxy whitelist server

**Command changes** Version 5.4.9-0.1: command added

# show atmf

**Overview** Displays information about the current AMF node.

**Syntax** `show atmf [summary|tech|nodes|session]`

| Parameter | Description |
|---|---|
| `summary` | Displays summary information about the current AMF node. |
| `tech` | Displays global AMF information. |
| `nodes` | Displays a list of AMF nodes together with brief details. |
| `session` | Displays information on an AMF session. |

**Default** Only summary information is displayed.

**Mode** User Exec and Privileged Exec

**Usage notes** AMF uses internal VLANs to communicate between nodes about the state of the AMF network. Two VLANs have been selected specifically for this purpose. Once these have been assigned, they are reserved for AMF and cannot be used for other purposes

For information on filtering and saving command output, see the "Getting Started with AlliedWare Plus" Feature Overview and Configuration Guide.

**Example 1** To show summary information on AMF node_1 use the following command:

```
node_1# show atmf summary
```

**Table 52:** Output from the **show atmf summary** command

```
node_1#show atmf summary
ATMF Summary Information:

ATMF Status            : Enabled
Network Name           : Test_network
Node Name              : node_1
Role                   : Master
Restricted login       : Disabled
Current ATMF Nodes     : 3
```

**Example 2** To show information specific to AMF nodes use the following command:

```
node_1# show atmf nodes
```

**Example 3** The **show amf session** command displays all CLI (Command Line Interface) sessions for users that are currently logged in and running a CLI session.

To display AMF active sessions, use the following command:

```
node_1# show atmf session
```

For example, in the output below, node_1 and node_5 have active users logged in.

**Table 53:** Output from the **show atmf session** command

```
node_1#show atmf session

CLI Session Neighbors

Session ID                            : 73518
Node Name                             : node_1
PID                                   : 7982
Link type                             : Broadcast-cli
MAC Address                           : 0000.0000.0000
Options                               : 0
Our bits                              : 0
Link State                            : Full
Domain Controller                     : 0
Backup Domain Controller              : 0
Database Description Sequence Number  : 00000000
First Adjacency                       : 1
Number Events                         : 0
DBE Retransmit Queue Length           : 0
DBE Request List Length               : 0
Session ID                            : 410804
Node Name                             : node_5
PID                                   : 17588
Link type                             : Broadcast-cli
MAC Address                           : 001a.eb56.9020
Options                               : 0
Our bits                              : 0
Link State                            : Full
Domain Controller                     : 0
Backup Domain Controller              : 0
Database Description Sequence Number  : 00000000
First Adjacency                       : 1
Number Events                         : 0
DBE Retransmit Queue Length           : 0
DBE Request List Length               : 0
```

**Example 4** The AMF tech command collects all the AMF commands, and displays them. You can use this command when you want to see an overview of the AMF network.

To display AMF technical information, use the following command:

```
node_1# show atmf tech
```

**Table 54:** Output from the **show atmf tech** command

```
node_1#show atmf tech
ATMF Summary Information:

ATMF Status            : Enabled
Network Name           : ATMF_NET
Node Name              : node_1
Role                   : Master
Current ATMF Nodes     : 8

ATMF Technical information:

Network Name                        : ATMF_NET
Domain                              : node_1's domain
Node Depth                          : 0
Domain Flags                        : 0
Authentication Type                 : 0
MAC Address                         : 0014.2299.137d
Board ID                            : 287
Domain State                        : DomainController
Domain Controller                   : node_1
Backup Domain Controller            : node2
Domain controller MAC               : 0014.2299.137d
Parent Domain                       : -
Parent Domain Controller            : -
Parent Domain Controller MAC        : 0000.0000.0000
Number of Domain Events             : 0
Crosslink Ports Blocking            : 0
Uplink Ports Waiting on Sync        : 0
Crosslink Sequence Number           : 7
Domains Sequence Number             : 28
Uplink Sequence Number              : 2
Number of Crosslink Ports           : 1
Number of Domain Nodes              : 2
Number of Neighbors                 : 5
Number of Non Broadcast Neighbors   : 3
Number of Link State Entries        : 1
Number of Up Uplinks                : 0
Number of Up Uplinks on This Node   : 0
DBE Checksum                        : 84fc6
Number of DBE Entries               : 0
Management Domain Ifindex           : 4391
Management Domain VLAN              : 4091
Management ifindex                  : 4392
Management VLAN                     : 4092
```

**Table 55:** Parameter definitions from the **show atmf tech** command

| Parameter | Definition |
|---|---|
| `ATMF Status` | The Node's AMF status, either Enabled or Disabled. |
| `Network Name` | The AMF network that a particular node belongs to. |

**Table 55:** Parameter definitions from the **show atmf tech** command (cont.)

| Parameter | Definition |
|---|---|
| `Node Name` | The name assigned to a particular node. |
| `Role` | The role configured for this AMF device, either Master or Member. |
| `Current ATMF Nodes` | The count of AMF nodes in an AMF Network. |
| `Node Address` | An address used to access a remotely located node (.atmf). |
| `Node ID` | A unique identifier assigned to a Node on an AMF network. |
| `Node Depth` | The number of nodes in path from this node to level of the AMF root node. It can be thought of as the vertical depth of the AMF network from a particular node to the zero level of the AMF root node. |
| `Domain State` | The state of Node in a Domain in AMF network as Controller/Backup. |
| `Recovery State` | The AMF node recovery status. Indicates whether a node recovery is in progress on this device - Auto, Manual, or None. |
| `Management VLAN` | The VLAN created for traffic between Nodes of different domain (up/down links).<br>• VLAN ID - In this example VLAN 4092 is configured as the Management VLAN.<br>• Management Subnet - Network prefix for the subnet.<br>• Management IP Address - The IP address allocated for this traffic.<br>• Management Mask - The subnet mask used to create a subnet for this traffic (255.255.128.0). |
| `Domain VLAN` | The VLAN assigned for traffic between Nodes of same domain (crosslink).<br>• VLAN ID - In this example VLAN 4091 is configured as the domain VLAN.<br>• Domain Subnet. The subnet address used for this traffic.<br>• Domain IP Address. The IP address allocated for this traffic.<br>• Domain Mask. The subnet mask used to create a subnet for this traffic (255.255.128.0). |
| `Device Type` | The Product Series name. |
| `ATMF Master` | Whether the node is an AMF master node for its area ('Y' if it is and 'N' if it is not). |
| `SC` | The device configuration, one of C - Chassis (SBx8100 Series), S - Stackable (VCS) or N - Standalone. |
| `Parent` | The node to which the current node has an active uplink. |
| `Node Depth` | The number of nodes in the path from this node to the master node. |

**Related commands** show atmf detail

# show atmf area

**Overview** Use this command to display information about an AMF area. On AMF controllers, this command displays all areas that the controller is aware of. On remote AMF masters, this command displays the controller area and the remote local area. On gateways, this command displays the controller area and remote master area.

**Syntax** `show atmf area [detail] [<area-name>]`

| Parameter | Description |
|---|---|
| `detail` | Displays detailed information |
| `<area-name>` | Displays information about master and gateway nodes in the specified area only. |

**Mode** Privileged Exec

**Example 1** To show information about all areas, use the command:

```
controller-1# show atmf area
```

The following figure shows example output from running this command on a controller.

**Table 56:** Example output from the **show atmf area** command on a Controller.

```
controller-1#show atmf area

  ATMF Area Information:

  * = Local area

  Area                Area   Local         Remote        Remote         Node
  Name                ID     Gateway       Gateway       Master         Count
-----------------------------------------------------------------------------
* NZ                  1      Reachable     N/A           N/A             3
  Wellington          2      Reachable     Reachable     Auth OK         120
  Canterbury          3      Reachable     Reachable     Auth Error      -
  SiteA-AREA          14     Unreachable   Unreachable   Unreachable     -
  Auckland            100    Reachable     Reachable     Auth Start      -
  Southland           120    Reachable     Reachable     Auth OK         54

  Area count:         6                             Area node count:     177
```

The following figure shows example output from running this command on a remote master.

**Table 57:** Example output from the **show atmf area** command on a remote master.

```
Canterbury#show atmf area

  ATMF Area Information:

  * = Local area

  Area                Area   Local         Remote        Remote         Node
  Name                ID     Gateway       Gateway       Master         Count
-----------------------------------------------------------------------------
  NZ                  1      Reachable     N/A           N/A             -
* Canterbury          3      Reachable     N/A           N/A             40

  Area count:         2                       Local area node count:     40
```

**Table 58:** Parameter definitions from the **show atmf area** command

| Parameter | Definition |
|---|---|
| * | Indicates the area of the device on which the command is being run. |
| Area Name | The name of each area. |
| Area ID | The ID of the area. |
| Local Gateway | Whether the local gateway node is reachable or not. |
| Remote Gateway | Whether the remote gateway node is reachable or not. This is one of the following:<br>• Reachable, if the link has been established.<br>• Unreachable, if a link to the remote area has not been established. This could mean that a port or vlan is down, or that inconsistent VLANs have been configured using the switchport atmf-arealink command.<br>• N/A for the area of the controller or remote master on which the command is being run, because the gateway node on that device is local.<br>• Auth Start, which may indicate that the area names match on the controller and remote master, but the IDs do not match.<br>• Auth Error, which indicates that the areas tried to authenticate but there is a problem. For example, the passwords configured on the controller and remote master may not match, or a password may be missing on the remote master.?<br>• Auth OK, which indicates that area authentication was successful and you can now use the atmf select-area command. |
| Remote Master | Whether the remote master node is reachable or not. This is N/A for the area of the controller or remote master on which the command is being run, because the master node on that device is local. |
| Node Count | The number of nodes in the area. |
| Area Count | The number of areas controlled by the controller. |
| Area Node Count | The total number of nodes in the area. |

**Example 2** To show detailed information about the areas, use the command:

```
controller-1# show atmf area detail
```

The following figure shows example output from running this command.

**Table 59:** Output from the **show atmf area detail** command

```
controller-1#show atmf area detail

 ATMF Area Detail Information:

 Controller distance       : 0

 Controller Id             : 21
 Backup Available          : FALSE

 Area Id                   : 2
 Gateway Node Name         : controller-1
 Gateway Node Id           : 342
 Gateway Ifindex           : 6013
 Masters Count             : 1
 Master Node Name          : well-master (329)
 Node Count                : 2

 Area Id                   : 3
 Gateway Node Name         : controller-1
 Gateway Node Id           : 342
 Gateway Ifindex           : 4511
 Masters Count             : 2
 Master Node Name          : cant1-master (15)
 Master Node Name          : cant2-master (454)
 Node Count                : 2
```

**Related commands**

show atmf area summary

show atmf area nodes

show atmf area nodes-detail

# show atmf area guests

**Overview** This command will display details of all guests that the controller is aware of.

**Syntax** `show atmf area guests [<area-name> [<node-name>]]`

| Parameter | Description |
|---|---|
| *<area-name>* | The area name for guest information |
| *<node-name>* | The name of the node that connects to the guests. |

**Default** n/a

**Mode** User Exec/Privileged Exec

**Example 1** To display atmf area guest nodes on a controller, use the command,

```
GuestNode[1]#show atmf area guests
```

**Output** Figure 51-14: Example output from the **show atmf area guests** command

```
main-building Area Guest Node Information:
Device          MAC                                          IP/IPv6
Type            Address         Parent          Port         Address
-------------------------------------------------------------------------------
-               0008.5d10.7635  x230            1.0.3        192.168.5.4
AT-TQ4600       eccd.6df2.da60  wireless-node1  1.0.4        192.168.5.3
-               0800.239e.f1fe  x230            1.0.4        192.168.4.8
AT-TQ4600       001a.eb3b.dc80  wireless-node2  1.0.7        192.168.4.12

main-building guest node count 4

GuestNode[1]#
```

**Table 60:** Parameters in the output from **show atmf area guests** command

| Parameter | Description |
|---|---|
| Device Type | The device type as read from the guest node. |
| MAC Address | The MAC address of the guest-node |
| Parent | The device that directly connects to the guest-node |
| Port | The port number on the parent node that connects to the guest node. |
| IP/IPv6 | The IP or IPv6 address of the guest node. |

**Related commands**

show atmf area

show atmf area nodes

show atmf backup guest

show atmf area guests-detail

# show atmf area guests-detail

**Overview** This command displays the local and remote guest information from an AMF controller.

**Syntax** `show atmf area guests-detail [<area-name> [<node-name>]]`

| Parameter | Description |
|---|---|
| *<area-name>* | The name assigned to the AMF area. An area is an AMF network that is under the control of an AMF Controller. |
| *<node-name>* | The name assigned to the network node. |

**Default** n/a.

**Mode** Privileged Exec

**Example** To display detailed information for all guest nodes attached to "node1", which is located within the area named "northern", use the following command:

```
AMF_controller#show atmf area guests-detail northern node1
```

**Output** Figure 51-15: Example output from the **show atmf guest detail** command.

```
#show atmf guest detail

Node Name                        : Node1
Port Name                        : port1.0.5
Ifindex                          : 5005
Guest Description                : tq4600
Device Type                      : AT-TQ4600
Configuration Mismatch           : No
Backup Supported                 : Yes
MAC Address                      : eccd.6df2.da60
IP Address                       : 192.168.4.50
IPv6 Address                     : Not Set
HTTP Port                        : 80
Firmware Version                 :
Node Name                        : poe
Port Name                        : port1.0.6
Ifindex                          : 5006
Guest Description                : tq3600
Device Type                      : AT-TQ2450
Configuration Mismatch           : No
Backup Supported                 : Yes
MAC Address                      : 001a.eb3b.cb80
IP Address                       : 192.168.4.9
IPv6 Address                     : Not Set
HTTP Port                        : 80
Firmware Version                 :
```

**Table 61:** Parameters shown in the output of the **show atmf guest detail** command

| Parameter | Description |
|---|---|
| `Node Name` | The name of the guest's parent node. |
| `Port Name` | The port on the parent node that connects to the guest. |
| `IFindex` | An internal index number that maps to the port number on the parent node. |
| `Guest Description` | A brief description of the guest node as manually entered into the description (interface) command for the guest node port on the parent node. |
| `Device Type` | The device type as supplied by the guest node itself. |
| `Backup Supported` | Indicates whether AMF supports backup of this guest node. |
| `MAC Address` | The MAC address of the guest node. |
| `IP Address` | The IP address of the guest node. |
| `IPv6 Address` | The IPv6 address of the guest node. |
| `HTTP Port` | The HTTP port enables you to specify a port when enabling http to allow a URL for the http user interface of a Guest Node. This is determined by the http-enable command. |
| `Firmware Version` | The firmware version that the guest node is currently running. |

**Related commands**

show atmf area nodes-detail

show atmf area guests

# show atmf area nodes

**Overview** Use this command to display summarized information about an AMF controller's remote nodes.

Note that this command can only be run from a controller node.

**Syntax** `show atmf area nodes <area-name> [<node-name>]`

| Parameter | Description |
|---|---|
| *<area-name>* | Displays information about nodes in the specified area. |
| *<node-name>* | Displays information about the specified node. |

**Mode** Privileged Exec

**Usage notes** If you do not limit the output to a single area or node, this command lists all remote nodes that the controller is aware of. This can be a very large number of nodes.

**Example** To show summarized information for all the nodes in area 'Wellington', use the command:

```
controller-1# show atmf area nodes Wellington
```

The following figure shows partial example output from running this command.

**Table 62:** Output from the **show atmf area nodes Wellington** command

```
controller-1#show atmf area nodes Wellington

 Wellington Area Node Information:
 Node          Device            ATMF          Parent                    Node
 Name          Type              Master  SC    Domain                    Depth
 ---------------------------------------------------------------------------
 well-gate     x230-18GP         N       N     well-master               1
 well-master   AT-x930-28GPX     Y       N     none                      0

Wellington node count 2
```

**Table 63:** Parameter definitions from the **show atmf area nodes** command

| Parameter | Definition |
|---|---|
| `Node Name` | The name assigned to a particular node. |
| `Device Type` | The Product series name. |
| `ATMF Master` | Whether the node is an AMF master node for its area ('Y' if it is and 'N' if it is not). |

**Table 63:** Parameter definitions from the **show atmf area nodes** command

| Parameter | Definition |
|---|---|
| SC | The device configuration, one of C - Chassis (SBx8100 series), S - Stackable (VCS) or N - Standalone. |
| `Parent Domain` | The node to which the current node has an active uplink. |
| `Node Depth` | The number of nodes in the path from this node to the master node. |

**Related commands**

show atmf area

show atmf area nodes-detail

# show atmf area nodes-detail

**Overview** Use this command to display detailed information about an AMF controller's remote nodes.

Note that this command can only be run from a controller node.

**Syntax** `show atmf area nodes-detail <area-name> [<node-name>]`

| Parameter | Description |
|---|---|
| *<area-name>* | Displays detailed information about nodes in the specified area. |
| *<node-name>* | Displays detailed information about the specified node. |

**Mode** Privileged Exec

**Usage notes** If you do not limit the output to a single area or node, this command displays information about all remote nodes that the controller is aware of. This can be a very large number of nodes.

**Example** To show information for all the nodes in area 'Wellington', use the command:

```
controller-1# show atmf area nodes-detail Wellington
```

The following figure shows partial example output from running this command.

**Table 64:** Output from the **show atmf area nodes-detail Wellington** command

```
controller-1#show atmf area nodes-detail Wellington

Wellington Area Node Information:
  Node name  well-gate
  Parent node name   : well-master
  Domain id          : well-gate's domain
  Board type         : 368
  Distance to core   : 1
  Flags              : 50
  Extra flags        : 0x00000006
  MAC Address        : 001a.eb56.9020

Node name well-master
  Parent node name   : none
  Domain id          : well-master's domain
  Board type         : 333
  Distance to core   : 0
  Flags              : 51
  Extra flags        : 0x0000000c
  MAC Address        : eccd.6d3f.fef7

...
```

**Table 65:** Parameter definitions from the **show atmf area nodes-detail** command

| Parameter | Definition |
|---|---|
| `Node name` | The name assigned to a particular node. |
| `Parent node name` | The node to which the current node has an active uplink. |
| `Domain id` | The name of the domain the node belongs to. |
| `Board type` | The Allied Telesis code number for the device. |
| `Distance to core` | The number of nodes in the path from the current node to the master node in its area. |
| `Flags` | Internal AMF information |
| `Extra flags` | Internal AMF information |
| `MAC Address` | The MAC address of the current node |

**Related commands**

show atmf area

show atmf area nodes

# show atmf area summary

**Overview** Use this command to display a summary of IPv6 addresses used by AMF, for one or all of the areas controlled by an AMF controller.

**Syntax** `show atmf area summary [<area-name>]`

| Parameter | Description |
|---|---|
| *<area-name>* | Displays information for the specified area only. |

**Mode** Privileged Exec

**Example 1** To show a summary of IPv6 addresses used by AMF, for all of the areas controlled by controller-1, use the command:

```
controller-1# show atmf area summary
```

The following figure shows example output from running this command.

**Table 66:** Output from the **show atmf area summary** command

```
controller-1#show atmf area summary

 ATMF Area Summary Information:

Management Information
 Local IPv6 Address              : fd00:4154:4d46:1::15

Area Information
 Area Name                       : NZ (Local)
 Area ID                         : 1
 Area Master IPv6 Address        : -

 Area Name                       : Wellington
 Area ID                         : 2
 Area Master IPv6 Address        : fd00:4154:4d46:2::149

 Area Name                       : Canterbury
 Area ID                         : 3
 Area Master IPv6 Address        : fd00:4154:4d46:3::f

 Area Name                       : Auckland
 Area ID                         : 100
 Area Master IPv6 Address        : fd00:4154:4d46:64::17
 Interface                       : vlink2000
```

**Related commands**

show atmf area

show atmf area nodes

show atmf area nodes-detail

# show atmf authorization

**Overview** Use this command on an AMF master to display the authorization status of other AMF members and masters on the network.

On an AMF controller this command will show the authorization status of remote area AMF masters.

**Syntax**

```
show atmf authorization {current|pending|provisional}
```

| Parameter | Description |
|---|---|
| `current` | Show the status of all authorized nodes. |
| `pending` | Show the status of unauthorized nodes in the pending queue. These are nodes that enabled secure mode with atmf secure-mode but have not yet been authorized with atmf authorize. |
| `provisional` | Show the status of provisionally authorized nodes. These are nodes that have been provisioned with atmf authorize provision. |

**Mode** Privileged Exec

**Example** To display all authorized AMF nodes on an AMF controller or AMF master, use the command:

```
awplus# show atmf authorization current
```

To display AMF nodes which are requesting authorization on an AMF controller or AMF master, use the command:

```
awplus# show atmf authorization pending
```

To display AMF nodes which have provisional authorization, use the command:

```
awplus# show atmf authorization provisional
```

**Output** Figure 51-16: Example output from **show atmf authorization current**

```
  NZ Authorized Nodes:
  Node Name             Signer                Expires
-----------------------------------------------------------------
  master_1              master_1              4 Mar 2017
  area_1_node_1         master_1              4 Mar 2017
  area_1_node_2         master_1              4 Mar 2017
```

Table 51-1: Parameters in the output from **show atmf authorization current**

| Parameter | Description |
|---|---|
| Node Name | AMF node name of the authorized node. |
| Signer | Name of the AMF master that authorized the node. |
| Expires | Expiry date of the authorization. Authorization expiry time is set using atmf secure-mode certificate expiry. |

**Output** Figure 51-17: Example output from **show atmf authorization pending**

```
  Pending Authorizations:

  NZ Requests:
  Node Name           Product          Parent Node      Interface
-------------------------------------------------------------------
  area_1_node_3       x230-18GP        master_1         port1.2.9
  area_1_node_4       x510-52GTX       master_1         sa1
```

Table 51-2: Parameters in the output from **show atmf authorization pending**

| Parameter | Description |
|---|---|
| Node Name | Name of the node that is requesting authorization. |
| Product | Product name. |
| Parent Node | Authorization authority of the requesting node. |
| Interface | Interface that the authorization request came in on. |

**Output** Figure 51-18: Example output from **show atmf authorization provisional**

```
 ATMF Provisional Authorization:

  Area - Node Name                  Start                  Timeout
  or MAC Address      Interface     Time                   Minutes
-------------------------------------------------------------------
  3333.4444.5555                    5 Sep 2016 02:35:54     3
  1111.2222.3333                    5 Sep 2016 02:35:24     60
  NZ - blue           port1.0.3     5 Sep 2016 02:35:06     60
```

Table 51-3: Parameters in the output from **show atmf authorization provisional**

| Parameter | Description |
|---|---|
| `Area - Node Name or MAC Address` | MAC address or node name of the node that has been provisionally authorized. |
| `Interface` | Interface that the node has been provisioned on. |
| `Start Time` | Time the node was provisioned. |
| `Timeout Minutes` | Length of time from `Start Time` until the provisional authorization expires. |

**Related commands**

atmf authorize

atmf authorize provision

atmf secure-mode

clear atmf secure-mode certificates

show atmf

show atmf secure-mode

show atmf secure-mode certificates

**Command changes**

Version 5.4.7-0.3: command added

# show atmf backup

**Overview** This command displays information about AMF backup status for all the nodes in an AMF network. It can only be run on AMF master and controller nodes.

**Syntax**

```
show atmf backup
show atmf backup logs
show atmf backup server-status
show atmf backup synchronize [logs]
```

| Parameter | Description |
|---|---|
| `logs` | Displays detailed log information. |
| `server-status` | Displays connectivity diagnostics information for each configured remote file server. |
| `synchronize` | Display the file server synchronization status |
| `logs` | For each remote file server, display the logs for the last synchronization |

**Mode** Privileged Exec

**Example 1** To display the AMF backup information, use the command:

```
node_1# show atmf backup
```

To display log messages to do with backups, use the command:

```
node_1# show atmf backup logs
```

Table 51-4: Output from **show atmf backup**

```
Node_1# show atmf backup
ScheduledBackup ......Enabled
  Schedule............1 per day starting at 03:00
  Next Backup Time....04 May 2019 03:00
Backup Bandwidth .....Unlimited
Backup Media..........SD (Total 1974.0 MB, Free197.6MB)
Current Action........Starting manual backup
Started...............04 May 2019 10:08
CurrentNode...........atmf_testbox1
Backup Redundancy ....Enabled
  Local media ........SD (Total 3788.0MB, Free 3679.5MB)
  State ..............Active

Node Name                Date         Time      In ATMF  On Media   Status
-------------------------------------------------------------------------------
atmf_testbox1            04 May 2019  09:58:59  Yes      Yes        In Progress
atmf_testbox2            04 May 2019  10:01:23  Yes      Yes        Good
```

Table 51-5: Output from **show atmf backup logs**

```
Node_1#show atmf backup logs

Backup Redundancy ..... Enabled
Local media ......... SD (Total 3788.0MB, Free 1792.8MB)
State ............... Inactive (Remote file server is not available)

Log File Location: card:/atmf/ATMF/logs/rsync_<node name>.log

Node
Name Log Details
-------------------------------------------------------------------------------
atmf_testbox
2019/05/04 18:16:51 [9045] receiving file list
2019/05/04 18:16:51 [9047] .d..t.... flash/
2019/05/04 18:16:52 [9047] >f+++++++ flash/a.rel
```

**Example 2** To display the AMF backup synchronization status, use the command:

```
node_1# show atmf backup synchronize
```

To display log messages to do with synchronization of backups, use the command:

```
node_1# show atmf backup synchronize logs
```

Table 51-6: Output from **show atmf backup synchronize**

```
Node_1#show atmf backup synchronize

ATMF backup synchronization:

 * = Active file server

  Id  Date          Time       Status
-----------------------------------------------------------------
  1   04 May 2016   22:25:57   Synchronized
* 2   -             -          Active
```

Table 51-7: Output from **show atmf backup synchronize logs**

```
Node_1#show atmf backup synchronize logs

Id    Log Details
-------------------------------------------------------------------------------
1     2019/05/04 22:25:54 [8039] receiving file list
      2019/05/04 22:25:54 [8039] >f..t.... backup_Box1.info
      2019/05/04 22:25:54 [8039] sent 46 bytes received 39 bytes total size 40
```

**Example 3** To display the AMF backup information with the optional parameter **server-status**, use the command:

```
Node_1# show atmf backup server-status
```

```
Node1#sh atmf backup server-status

Id   Last Check    State
-------------------------------------
1    186 s         File server ready
2    1 s           SSH no route to host
```

**Table 52:** Parameter definitions from the **show atmf backup** command

| Parameter | Definition |
|---|---|
| Scheduled Backup | Indicates whether AMF backup scheduling is enabled or disabled. |
| Schedule | Displays the configured backup schedule. |
| Next Backup Time | Displays the date and time of the next scheduled. |
| Backup Media | The current backup medium in use.<br>This will be SD or NONE. SD card only (and not USB) is supported for AMF backup. Utilized and available memory (MB) will be indicated if backup media memory is present. |
| Current Action | The task that the AMF backup mechanism is currently performing. This will be a combination of either (Idle, Starting, Doing, Stopping), or (manual, scheduled). |
| Started | The date and time that the currently executing task was initiated in the format DD MMM YYYY HH:MM |
| Current Node | The name of the node that is currently being backed up. |
| Backup Redundancy | Whether backup redundancy is enabled or disabled. |
| Local media | The local media to be used for backup redundancy; SD, USB, INTERNAL, or NONE, and total and free memory available on the media. |
| State | Whether SD or USB media is installed and available for backup redundancy. May be Active (if backup redundancy is functional—requires both the local redundant backup media and a remote server to be configured and available) or Inactive. |
| Node Name | The name of the node that is storing backup data - on its backup media. |
| Date | The data of the last backup in the format DD MMM YYYY. |
| Time | The time of the last backup in the format HH:MM:SS. |
| In ATMF | Whether the node shown is active in the AMF network, (Yes or No). |
| On Media | Whether the node shown has a backup on the backup media (Yes or No). |

**Table 52:** Parameter definitions from the **show atmf backup** command (cont.)

| Parameter | Definition |
|---|---|
| `Status` | The output can contain one of four values:<br>• "-" meaning that the status file cannot be found or cannot be read.<br>• "Errors" meaning that there are issues - note that the backup may still be deemed successful depending on the errors.<br>• "Stopped" meaning that the backup attempt was manually aborted.<br>• "Good" meaning that the backup was completed successfully.<br>• "In Progress" meaning that the backup is currently running on that node. |
| `Log File Location` | All backup attempts will generate a result log file in the identified directory based on the node name. In the above example this would be: card:/amf/office/logs/rsync_amf_testbox1.log. |
| `Log Details` | The contents of the backup log file. |
| `server-status` | Displays connectivity diagnostics information for each configured remove file server. |

For information on filtering and saving command output, see the "Getting Started with AlliedWare Plus" Feature Overview and Configuration Guide.

**Related commands**

show atmf

atmf network-name

# show atmf backup area

**Overview** Use this command to display backup status information for the master nodes in one or more areas.

Note that this command is only available on AMF controllers.

**Syntax**

```
show atmf backup area [<area-name> [<node-name>]] [logs]
```

| Parameter | Description |
|---|---|
| `logs` | Displays the logs for the last backup of each node. |
| `<area-name>` | Displays information about nodes in the specified area. |
| `<node-name>` | Displays information about the specified node. |

**Mode** Privileged Exec

**Example** To show information about backups for an area, use the command:

```
controller-1# show atmf backup area
```

**Table 53:** Output from the **show atmf backup area** command

```
controller-1#show atmf backup area

Scheduled Backup ...... Enabled
  Schedule ............ 12 per day starting at 14:30
  Next Backup Time .... 15 Oct 2016 04:30
Backup Bandwidth ...... Unlimited
Backup Media .......... FILE SERVER 1 (Total 128886.5MB, Free 26234.2MB)
Server Config .........
 * 1 .................. Configured   (Mounted, Active)
    Host ............... 10.37.74.1
    Username ........... root
    Path ............... /tftpboot/backups_from_controller-1
    Port ............... -
   2 ................... Configured   (Unmounted)
    Host ............... 10.37.142.1
    Username ........... root
    Path ............... -
    Port ............... -
Current Action ........ Idle
  Started ............. -
  Current Node ........ -

Backup Redundancy ..... Enabled
  Local media ......... USB (Total 7604.0MB, Free 7544.0MB)
  State ............... Active

Area Name         Node Name           Id   Date          Time       Status
-------------------------------------------------------------------------------
Wellington        camry               1    14 Oct 2016   02:30:22   Good
Canterbury        corona              1    14 Oct 2016   02:30:23   Good
Canterbury        Avensis             1    14 Oct 2016   02:30:22   Good
Auckland          RAV4                1    14 Oct 2016   02:30:23   Good
Southland         MR2                 1    14 Oct 2016   02:30:24   Good
```

**Related commands**

atmf backup area-masters enable

show atmf area

show atmf area nodes-detail

switchport atmf-arealink

# show atmf backup guest

**Overview** This command displays backup status information of guest nodes in an AMF network.This command can only be run on a device configured as an AMF Master and has an AMF guest license.

**Syntax** `show atmf backup guest [<node-name> [<guest-port>]] [logs]`

| Parameter | Description |
|---|---|
| *<node-name>* | The name of parent guest node |
| *<guest-port>* | The port number on the parent node |

**Mode** User Exec/Privileged Exec

**Example** On the switch named x930-master, to display information about the AMF backup guest status, use the command:

```
x930-master# show atmf backup guest
```

**Output** Figure 51-19: Example output from **show atmf backup guest**

```
x930-master#sh atmf backup guest
Guest Backup .......... Enabled
Scheduled Backup ...... Disabled
  Schedule ............ 1 per day starting at 03:00
  Next Backup Time .... 20 Jan 2016 03:00
Backup Bandwidth ...... Unlimited
Backup Media .......... FILE SERVER 2 (Total 655027.5MB,
                        Free 140191.5MB)
Server Config
 1 .................. Configured (Mounted)
 Host ............... 11.0.24.1
 Username ........... bob
 Path ............... guest-project
 Port ............... -
* 2 .................. Configured (Mounted, Active)
 Host ............... 11.0.24.1
 Username ........... bob
 Path ............... guest-project-second
Port.................-
Current Action .......Idle
Started ............. -
Current Node ........ -
Backup Redundancy ....Enabled
Local media ......... USB (Total 7376.0MB, Free 7264.1MB)
State ............... Active
```

```
Parent Node Name     Port Name       Id     Date          Time         Status
-------------------------------------------------------------------------------
x230                 port1.0.4       2      19 Jan 2016   22:21:46     Good
                                     1      19 Jan 2016   22:21:46     Good
                                     USB    19 Jan 2016   22:21:46     Good
```

Table 51-1: Parameters in the output from **show atmf backup guest**

| Parameter | Description |
|---|---|
| `Guest Backup` | The status of the guest node backup process |
| `Scheduled Backup` | The timing configured for guest backups. |
| `Schedule` | Displays the configured backup schedule. |
| `Next Backup Time` | The time the next backup process will be initiated. |
| `Backup Bandwidth` | The bandwidth limit applied to the backup data flow measured in kilo Bytes /second. Note that unlimited means there is no limit set specifically for the backup data flow. |
| `Backup Media` | Detail of the memory media used to store the backup files and the current memory capacity available. |

**Related commands**

show atmf backup area

show atmf backup

show atmf links guest

show atmf nodes

show atmf backup guest

atmf backup guests delete

atmf backup guests enable

# show atmf container

**Overview** Use this command to display information about the AMF containers created on a a Virtual AMF Appliance (VAA).

An AMF container is an isolated instance of AlliedWare Plus with its own network interfaces, configuration, and file system. The features available inside an AMF container are a sub-set of the features available on the host VAA. These features enable the AMF container to function as a uniquely identifiable AMF master and allows for multiple tenants (up to 60) to run on a single VAA host. See the AMF Feature Overview and_Configuration Guide for more information on running multiple tenants on a single VAA host.

**Syntax** `show atmf container [detail] [<container-name>]`

| Parameter | Description |
|---|---|
| `detail` | Show detailed information. |
| `<container-name>` | The name of the AMF container you wish to display information for. |

**Mode** Privileged Exec

**Output** Figure 51-20: Example output from **show atmf container**

```
awplus#show atmf container

ATMF Container Information:

  Container       Area        Bridge   State      Memory    CPU%
-------------------------------------------------------------------
  vac-wlg-1       wlg         br1      running    70.3 MB   1.2
  vac-akl-1       akl         br2      stopped    0 bytes   0.0
  vac-nsn-1       nsn         br3      running    53.2 MB   0.7

Current ATMF Container count: 3
```

Figure 51-21: Example output from **show atmf container vac-wlg-1**

```
awplus#show atmf container vac-wlg-1

ATMF Container Information:

  Container       Area        Bridge   State      Memory    CPU%
-------------------------------------------------------------------
  vac-wlg-1       wlg         br1      running    70.3 MB   1.2

Current ATMF Container count: 1
```

Table 51-2: Parameters in the output from **show atmf container**

| Parameter | Description |
|---|---|
| `Container` | Name of the AMF container. |
| `Area` | Name of the area the container is in. |
| `Bridge` | Name of the bridge connecting the container to the physical network. |
| `State` | Container state, `running` or `stopped`. This is set with the state command. |
| `Memory` | The amount of memory the container is using on the VAA host. |
| `CPU%` | The percentage of CPU time the container is using on the VAA, at the time the show command is run. |

Figure 51-22: Example output from **show atmf container detail vac-wlg-1**

```
awplus#show atmf container detail vac-wlg-1

ATMF Container Information:

Name: vac-wlg-1
State: RUNNING
PID: 980
IP: 172.31.0.1
IP: 192.168.0.2
IP: fd00:4154:4d46:3c::1
CPU use: 3.95 seconds
Memory use: 67.07 MiB
Memory use: 0 bytes
Link: vethP31UFA
TX bytes: 166.01 KiB
RX bytes: 141.44 KiB
Total bytes: 307.45 KiB
Link: vethYCT7BB
TX bytes: 674.27 KiB
RX bytes: 698.27 KiB
Total bytes: 1.34 MiB
```

Table 51-3: Parameters in the output from **show atmf container detail**

| Parameter | Description |
|---|---|
| `Name` | Name of the AMF container. |
| `State` | Container state, `RUNNING` or `STOPPED`. This is set with the state command. |

Table 51-3: Parameters in the output from **show atmf container detail** (cont.)

| Parameter | Description |
|---|---|
| `PID` | Internal container id. |
| `IP` | This lists the IP addresses used by the container. These include the eth1 IP address and the AMF management IP address. |
| `CPU use` | The CPU usage of the container since it was enabled. |
| `Memory use` | Container memory usage. |
| `Link` | Each container has two links:<br>1 An AMF area-link, this connects the container to the AMF controller and uses virtual interface eth0 on the AMF container.<br>2 A bridged L2 network link, this connects the container to the outside world and uses the virtual interface eth1 on the AMF container.<br>See the AMF Feature Overview and Configuration_Guide for more information on these links. |
| `TX/RX bytes` | Bytes sent and received on a link. |
| `Total bytes` | Total bytes transferred on a link. |

**Related commands**

area-link

atmf area

atmf area password

atmf container

atmf container login

bridge-group

description (amf-container)

state

**Command changes**

Version 5.4.7-0.1: command added

# show atmf detail

**Overview** This command displays details about an AMF node. It can only be run on AMF master and controller nodes.

**Syntax** `show atmf detail`

| Parameter | Description |
|---|---|
| `detail` | Displays output in greater depth. |

**Mode** Privileged Exec

**Example 1** To display the AMF node1 information in detail, use the command:

```
controller-1# show atmf detail
```

A typical output screen from this command is shown below:

```
atmf-1#show atmf detail
ATMF Detail Information:

Network Name                        : Test_network
Network Mtu                         : 1300
Node Name                           : controller-1
Node Address                        : controller-1.atmf
Node ID                             : 342
Node Depth                          : 0
Domain State                        : BackupDomainController
Recovery State                      : None
Recovery Over ETH Ports             : Disabled
Log Verbose Setting                 : Verbose
Topology GUI                        : Disabled

Management VLAN
 VLAN ID                            : 4000
 Management Subnet                  : 172.31.0.0
 Management IP Address              : 172.31.1.86
 Management Mask                    : 255.255.128.0
 Management IPv6 Address            : fd00:4154:4d46:1::156
 Management IPv6 Prefix Length      : 64

Domain VLAN
 VLAN ID                            : 4091
 Domain Subnet                      : 172.31.128.0
 Domain IP Address                  : 172.31.129.86
 Domain Mask                        : 255.255.128.0
```

**Table 52:** Parameter definitions from the **show atmf detail** command

| Parameter | Definition |
|---|---|
| `Network MTU` | The network MTU for the ATMF network. |
| `Network Name` | The AMF network that a particular node belongs to. |
| `Node Name` | The name assigned to a particular node. |
| `Node Address` | An address used to access a remotely located node. This is simply the Node Name plus the dotted suffix atmf (.atmf). |
| `Node ID` | A unique identifier assigned to a node on an AMF network. |
| `Node Depth` | The number of nodes in the path from this node to the level of the AMF root node. It can be thought of as the vertical depth of the AMF network from a particular node to the zero level of the AMF root node. |
| `Domain State` | The state of a node in a Domain in an AMF network as Controller/Backup. |
| `Recovery State` | The AMF node recovery status. Indicates whether a node recovery is in progress on this device - Auto, Manual, or None. |
| `Recovery Over ETH Ports` | Allow AMF recovery over the Eth port on an AR-series device. |
| `Log Verbose Setting` | The state of the atmf log-verbose command. |
| `Topology GUI` | This feature allows your AMF network to interact with Vista Manager EX and must be enabled on your AMF master. |
| `Management VLAN` | The VLAN created for traffic between nodes of different domain (up/down links).<br>• VLAN ID - in this example VLAN 4092 is configured as the Management VLAN.<br>• Management Subnet - the network prefix for the subnet.<br>• Management IP Address - the IP address allocated for this traffic.<br>• Management Mask - the subnet mask used to create a subnet for this traffic (255.255.128.0). |
| `Domain VLAN` | The VLAN assigned for traffic between nodes of the same domain (crosslink).<br>• VLAN ID - in this example VLAN 4091 is configured as the domain VLAN.<br>• Domain Subnet - the subnet address used for this traffic.<br>• Domain IP Address - the IP address allocated for this traffic.<br>• Domain Mask - the subnet mask used to create a subnet for this traffic (255.255.128.0). |
| `Node Depth` | The number of nodes in the path from this node to the core domain. |

# show atmf group

**Overview** This command can be used to display the group membership within to a particular AMF node. It can also be used with the working-set command to display group membership within a working set.

Each node in the AMF is automatically added to the group that is appropriate to its hardware architecture, e.g. x510, x230. Nodes that are configured as masters are automatically assigned to the master group.

You can create arbitrary groups of AMF members based on your own selection criteria. You can then assign commands collectively to any of these groups.

**Syntax**

```
show atmf group [user-defined|automatic]
```

| Parameter | Description |
|---|---|
| `user-defined` | User-defined-group information display. |
| `automatic` | Automatic group information display. |

**Default** All groups are displayed

**Mode** Privileged Exec

**Example 1** To display group membership of node2, use the following command:

```
node2# show atmf group
```

A typical output screen from this command is shown below:

```
ATMF group information

master, x510

node2#
```

This screen shows that node2 contains the groups **master** and **x510**. Note that although the node also contains the implicit groups, these do not appear in the show output.

**Example 2** The following commands (entered on *node2*) will display all the automatic groups within the working set containing *node1* and all nodes that have been pre-defined to contain the *sysadmin* group:

First define the working-set:

```
node1# #atmf working-set node1 group sysadmin
```

A typical output screen from this command is shown below:

```
ATMF group information

master, poe, x8100


===============================================
node1, node2, node3, node4, node5, node6:
===============================================

ATMF group information

sysadmin, x8100

AMF_NETWORK[6]#
```

This confirms that the six nodes (*node1* to *node6*) are now members of the working-set and that these nodes reside within the *AMF-NETWORK*.

Note that to run this command, you must have previously entered the command atmf working-set on page 2492. This can be seen from the network level prompt, which in this case is *AMF_NETWORK[6]#*.

**Table 53:** Sample output from the **show atmf group** command for a working set.

```
AMF_NETWORK[6]#show atmf group
==============================
node3, node4, node5, node6:
==============================

ATMF group information

edge_switches, x510
```

**Table 54:** Parameter definitions from the **show atmf group** command for a working set

| Parameter | Definition |
|---|---|
| `ATMF group information` | Displays a list of nodes and the groups that they belong to, for example:<br>• master - Shows a common group name for Nodes configured as AMF masters.<br>• Hardware Arch - Shows a group for all Nodes sharing a common Hardware architecture, e.g. x8100, x230, for example.<br>• User-defined - Arbitrary groups created by the user for AMF nodes. |

# show atmf group members

**Overview** This command will display all group memberships within an AMF working-set. Each node in the AMF working set is automatically added to automatic groups which are defined by hardware architecture, e.g. x510, x230. Nodes that are configured as masters are automatically assigned to the master group. Users can define arbitrary groupings of AMF members based on their own criteria, which can be used to select groups of nodes.

**Syntax**

```
show atmf group members [user-defined|automatic]
```

| Parameter | Description |
|---|---|
| `user-defined` | User defined group membership display. |
| `automatic` | Automatic group membership display. |

**Mode** Privileged Exec

**Example** To display group membership of all nodes in a working-set, use the command:

```
ATMF_NETWORK[9]# show atmf group members
```

**Table 55:** Sample output from the **show atmf group members** command

```
ATMF Group membership

Automatic        Total
Groups           Members   Members
-----------------------------------------------------------------
master           1         Building_1
poe              1         HW_Team1
x510             3         SW_Team1 SW_Team2 SW_Team3
x930             1         HW_Team1
x8100            2         Building_1 Building_2

ATMF Group membership

User-defined     Total
Groups           Members   Members
-----------------------------------------------------------------
marketing          1       Bld1_Floor_1
software           3       SW_Team1 SW_Team2 SW_Team3
```

**Table 56:** Parameter definitions from the **show atmf group members** command

| Parameter | Definition |
|---|---|
| `Automatic Groups` | Lists the Automatic Groups and their nodal composition. The sample output shows AMF nodes based on the same Hardware type or belonging to the same Master group. |
| `User-defined Groups` | Shows the grouping of AMF nodes in user defined groups. |
| `Total Members` | Shows the total number of members in each group. |
| `Members` | Shows the list of AMF nodes in each group. |

**Related commands**

show atmf group

show atmf

atmf group (membership)

# show atmf guests

**Overview** This command is available on any AMF master or controller in the network. It displays a summary of the AMF guest nodes that exist in the AMF network, including device type, parent node, and IP address.

**Syntax** `show atmf guests`

**Mode** User Exec/Privileged Exec

**Usage notes** Use this command to display all guest nodes in a network. If you want to see only the guests attached to a single node, use the show atmf links guest command, which shows information about the guest nodes and also about their link to their parent node.

**Example** To display the AMF guest output, use the command:

```
awplus# show atmf guests
```

**Output** Figure 51-23: Example output from the **show atmf guests** command

```
master#show atmf guests

  Guest Information:

  Device          Device          Parent      Guest     IP/IPv6
  Name            Type            Node        Port      Address
-----------------------------------------------------------------------
  node1-2.0.1     x600-24Ts       node1       2.0.1     192.168.2.10
  wireless-zone1  AT-TQ4600       node2       1.0.1     192.168.1.10
  wireless-zone2  AT-TQ4600       node2       1.0.2     192.168.1.12

  Current ATMF guest node count 3
```

**Table 57:** Parameters shown in the output of the **show atmf guests** command

| Parameter | Description |
|---|---|
| Device Name | The name that is discovered from the device, or failing that, a name that is auto-assigned by AMF. The auto-assigned name consists of:<br><parent node name>-<attached port number><br>You can change this by configuring a description on the port. |
| Device Type | The product name of the guest node, which is discovered from the device. If no device type can be discovered, this shows the name of the AMF guest-class that has been assigned to the guest node by the atmf guest-class command. |

**Table 57:** Parameters shown in the output of the **show atmf guests** command

| Parameter | Description |
|---|---|
| `Parent Node` | The name of the AMF node that directly connects to the guest node. |
| `Guest Port` | The port on the parent node that directly connects to the guest node. |
| `IP/IPv6 Address` | The address discovered from the node, or statically configured on the parent node's attached port. |

**Related commands**

atmf guest-class

switchport atmf-guestlink

show atmf backup guest

show atmf links guest

# show atmf guests detail

**Overview** This command is available on any AMF master in the network. It displays details about the AMF guest nodes that exist in the AMF network, such as device type, IP address, MAC address etc.

**Syntax** `show atmf guests detail [<node-name>] [<guest-port>]`

| Parameter | Description |
|---|---|
| *<node-name>* | The name of the guest node's parent. |
| *<guest-port>* | The port name on the parent node. |

**Mode** User Exec/Privileged Exec

**Usage notes** If you want to see only the guests attached to a single node, you can use either:

- this command and specify the node name, or
- show atmf links guest detail, which shows information about the guest nodes and also about their link to their parent node.

Note that the parameters that are displayed depend on the guest node's model.

**Example** To display the AMF guest output, use the command:

```
awplus# show atmf guests detail
```

**Output** Figure 51-24: Example output from **show atmf guests detail**

```
master#show atmf guests detail

ATMF Guest Node Information:

Node Name                       : master
Port Name                       : port1.0.9
Ifindex                         : 5009
Guest Description               : red-1.0.9
Device Type                     : x600-24Ts
Backup Supported                : No
MAC Address                     : 0000.cd38.0c4d
IP Address                      : 192.168.1.5
IPv6 Address                    : Not Set
HTTP Port                       : 0
Firmware Version                : 5.4.2-0.1
```

```
Node Name                       : node1
Port Name                       : port1.0.13
Ifindex                         : 5013
Guest Description               : node1-1.0.13
Device Type                     : AT-TQ4600
Backup Supported                : Yes
MAC Address                     : eccd.6df2.daa0
IP Address                      : 192.168.5.6
IPv6 Address                    : Not Set
HTTP Port                       : 80
Firmware Version                : 3.1.0 B01
```

**Table 58:** Parameters in the output from **show atmf guests detail**.

| Parameter | Description |
|---|---|
| Node Name | The name of the parent node, which is the AMF node that directly connects to the guest node. |
| Port Name | The port on the parent node that connects to the guest. |
| IfIndex | An internal index number that maps to the port number on the parent node. |
| Guest Description | A description that is discovered from the device, or failing that, auto-assigned by AMF. The auto-assigned name consists of:<br><parent node name>-<attached port number>.<br>You can change this by configuring a description on the port. |
| Device Type | The product name of the guest node, which is discovered from the device. If no device type can be discovered, this shows the name of the AMF guest-class that has been assigned to the guest node by the atmf guest-class command. |
| Username | The user name configured on the guest node. |
| Backup Supported | Whether the guest node supports AMF backup functionality. |
| MAC Address | The MAC address of the guest node. |
| IP Address | The IP address of the guest node. |
| IPv6 Address | The IPv6 address of the guest node. |
| Firmware Version | The version of the firmware operating on the guest node. |
| HTTP port | The HTTP port as specified with the http-enable command when defining a guest class. You can set this if the guest node provides an HTTP user interface on a non-standard port (any port other than port 80). |

**Related commands**

atmf guest-class

switchport atmf-guestlink

show atmf backup guest

# show atmf links

**Overview** This command displays information about AMF links on a switch. The display output contains link status state information.

**Syntax** `show atmf links [brief]`

| Parameter | Description |
|---|---|
| `brief` | A brief summary of AMF links, their configuration and status. |

**Mode** User Exec and Privileged Exec

**Usage notes** The **show atmf links** and **show atmf links brief** commands both produce a table of summarized link information. For a more detailed view use the show atmf links detail command.

This command does not show links that are configured on provisioned ports.

**Example** To display a brief summary of the AMF links, use the following command:

```
node-1# show atmf links brief
```

Figure 51-25: Example output from **show atmf links brief**

```
Example-core# show atmf links

ATMF Link Brief Information:

Local      Link       Link    ATMF        Adjacent       Adjacent    Link
Port       Type       Status  State       Node           Ifindex     State
-----------------------------------------------------------------------------
1.0.10     Crosslink  Down    Init        *crosslink1     -          Blocking
1.0.14     Crosslink  Down    Init        *crosslink2     -          Blocking
1.0.1      Downlink   Down    Init        -               -          Blocking
1.0.2      Downlink   Up      Full        Node2           5001       Forwarding
1.0.8      Downlink   Up      Full        downlink1       5001       Forwarding

* = Provisioned.
```

Table 51-1: Parameter in the output from **show atmf links brief**

| Parameter | Definition |
|---|---|
| `Local Port` | Shows the local port on the selected node. |
| `Link Type` | Shows link type as Uplink or Downlink (parent and child) or Cross-link (nodes in same domain). |
| `Link Status` | Shows the link status of the local port on the node as either Up or Down. |

Table 51-1: Parameter in the output from **show atmf links brief** (cont.)

| Parameter | Definition |
|---|---|
| `ATMF State` | Shows AMF state of the local port:<br>• Init - Link is down.<br>• Hold - Link transitioned to up state, but waiting for hold period to ensure link is stable.<br>• Incompatible - Neighbor rejected the link because of inconsistency in AMF configurations.<br>• OneWay - Link is up and has waited the hold down period and now attempting to link to another unit in another domain.<br>• OneWaySim - Device is running in secure mode and link is up but waiting for authorization from an AMF master.<br>• Full - Link hello packets are sent and received from its neighbor with its own node id.<br>• Shutdown - Link has been shut down by user configuration. |
| `Adjacent Node` | Shows the Adjacent AMF Node to the one being configured. |
| `Adjacent IF Index` | Shows the IF index for the Adjacent AMF Node connected to the node being configured. |
| `Link State` | Shows the state of the AMF link. Valid states are either Forwarding or Blocking. |

For information on filtering and saving command output, see the "Getting Started with AlliedWare_Plus" Feature Overview and Configuration Guide.

**Related commands**

no debug all

clear atmf links statistics

show atmf

show atmf links detail

show atmf links guest

show atmf links guest detail

show atmf links statistics

show atmf nodes

# show atmf links detail

**Overview** This command displays detailed information on all the links configured in the AMF network. It can only be run on AMF master and controller nodes.

**Syntax**

```
show atmf links detail
```

| Parameter | Description |
|---|---|
| `detail` | Detailed AMF links information. |

**Mode** User Exec

**Usage notes** For summarized link information see the show atmf links command.

This command does not show links that are configured on provisioned ports.

**Example** To display the AMF link details use this command:

```
device1# show atmf links detail
```

The output from this command will display all the internal data held for AMF links. The following example gives details of the links that are summarized in the example in show atmf links.

**Table 52:** Sample output from the **show atmf links detail** command

```
device1# show atmf links detail

--------------------------------------------------------------------------------
Crosslink Ports Information
--------------------------------------------------------------------------------
Port                                : sa1
Ifindex                             : 4501
Port Status                         : Down
Port State                          : Init
Last event                          :
Port BPDU Receive Count             : 0
Port                                : po10
Ifindex                             : 4610
Port Status                         : Up
Port State                          : Full
Last event                          : AdjNodeLSEPresent
Port BPDU Receive Count             : 140
Adjacent Node Name                  : Building-B
Adjacent Ifindex                    : 4610
Adjacent MAC                        : eccd.6dd1.64d0
Port Last Message Response          : 0
```

**Table 52:** Sample output from the **show atmf links detail** command (cont.)

```
Port                                : po30
Ifindex                             : 4630
Port Status                         : Up
Port State                          : Full
Last event                          : AdjNodeLSEPresent
Port BPDU Receive Count             : 132
Adjacent Node Name                  : Building-A
Adjacent Ifindex                    : 4630
Adjacent MAC                        : eccd.6daa.c861
Port Last Message Response          : 0

Link State Entries:

Crosslink Ports Blocking            : False
Node.Ifindex                        : Building-A.4630 - Example-core.4630
Transaction ID                      : 2 - 2
MAC Address                         : eccd.6daa.c861 - 0000.cd37.054b
Link State                          : Full - Full

Node.Ifindex                        : Building-B.4610 - Example-core.4610
Transaction ID                      : 2 - 2
MAC Address                         : eccd.6dd1.64d0 - 0000.cd37.054b
Link State                          : Full - Full

Domain Nodes Tree:

Node                                : Building-A
  Links on Node                     : 1
  Link 0                            : Building-A.4630 - Example-core.4630
  Forwarding State                  : Forwarding
Node                                : Building-B
  Links on Node                     : 1
  Link 0                            : Building-B.4610 - Example-core.4610
  Forwarding State                  : Forwarding
Node                                : Example-core
  Links on Node                     : 2
  Link 0                            : Building-A.4630 - Example-core.4630
  Forwarding State                  : Forwarding
  Link 1                            : Building-B.4610 - Example-core.4610
  Forwarding State                  : Forwarding
Crosslink Transaction Entries:

Node                                : Building-B
Transaction ID                      : 2
Uplink Transaction ID               : 6
Node                                : Building-A
Transaction ID                      : 2
Uplink Transaction ID               : 6

Uplink Information:

Waiting for Sync                    : 0
Transaction ID                      : 6
Number of Links                     : 0
Number of Local Uplinks             : 0
```

**Table 52:** Sample output from the **show atmf links detail** command (cont.)

```
Originating Node                    : Building-A
Domain                              : -'s domain
Node                                : Building-A
Ifindex                             : 0
Node Depth                          : 0
Transaction ID                      : 6
Flags                               : 32
Domain Controller                   : -
Domain Controller MAC               : 0000.0000.0000

Originating Node                    : Building-B
Domain                              : -'s domain
Node                                : Building-B
Ifindex                             : 0
Node Depth                          : 0
Transaction ID                      : 6
Flags                               : 32
Domain Controller                   : -
Domain Controller MAC               : 0000.0000.0000

Downlink Domain Information:

Domain                              : Dept-A's domain
  Domain Controller                 : Dept-A
  Domain Controller MAC             : eccd.6d20.c1d9
  Number of Links                   : 2
  Number of Links Up                : 2
  Number of Links on This Node      : 2
  Links are Blocked                 : 0
  Node Transaction List
    Node                            : Building-B
    Transaction ID                  : 8
    Node                            : Building-A
    Transaction ID                  : 8
  Domain List
    Domain                          : Dept-A's domain
      Node                          : Example-core
      Ifindex                       : 4621
      Transaction ID                : 8
      Flags                         : 1
    Domain                          : Dept-A's domain
      Node                          : Example-core
      Ifindex                       : 4622
      Transaction ID                : 8
      Flags                         : 1
```

**Table 52:** Sample output from the **show atmf links detail** command (cont.)

```
Domain                              : Dorm-D's domain
  Domain Controller                 : Dorm-D
  Domain Controller MAC             : 0000.cd37.082c
  Number of Links                   : 2
  Number of Links Up                : 2
  Number of Links on This Node      : 2
  Links are Blocked                 : 0
  Node Transaction List
    Node                            : Building-B
    Transaction ID                  : 20
    Node                            : Building-A
    Transaction ID                  : 20
  Domain List
    Domain                          : Dorm-D's domain
      Node                          : Building-A
      Ifindex                       : 0
      Transaction ID                : 20
      Flags                         : 32
    Domain                          : Dorm-D's domain
      Node                          : Building-B
      Ifindex                       : 0
      Transaction ID                : 20
      Flags                         : 32
    Domain                          : Dorm-D's domain
      Node                          : Example-core
      Ifindex                       : 4510
      Transaction ID                : 20
      Flags                         : 1
    Domain                          : Dorm-D's domain
      Node                          : Example-core
      Ifindex                       : 4520
      Transaction ID                : 20
      Flags                         : 1

Domain                              : Example-edge's domain
  Domain Controller                 : Example-edge
  Domain Controller MAC             : 001a.eb93.7aa6
  Number of Links                   : 1
  Number of Links Up                : 1
  Number of Links on This Node      : 0
  Links are Blocked                 : 0
  Node Transaction List
    Node                            : Building-B
    Transaction ID                  : 9
    Node                            : Building-A
    Transaction ID                  : 9
```

**Table 52:** Sample output from the **show atmf links detail** command (cont.)

```
  Domain List
    Domain                          : Example-edge's domain
      Node                          : Building-A
      Ifindex                       : 0
      Transaction ID                : 9
      Flags                         : 32
    Domain                          : Example-edge's domain
      Node                          : Building-B
      Ifindex                       : 5027
      Transaction ID                : 9
      Flags                         : 1
----------------------------------------------------------------
Up/Downlink Ports Information
----------------------------------------------------------------
Port                                : sa10
Ifindex                             : 4510
Port Status                         : Up
Port State                          : Full
Last event                          : LinkComplete
Adjacent Node                       : Dorm-A
Adjacent Internal ID                : 211
Adjacent Ifindex                    : 4510
Adjacent Board ID                   : 387
Adjacent MAC                        : eccd.6ddf.6cdf
Adjacent Domain Controller          : Dorm-D
Adjacent Domain Controller MAC      : 0000.cd37.082c
Port Forwarding State               : Forwarding
Port BPDU Receive Count             : 95
Port Sequence Number                : 11
Port Adjacent Sequence Number       : 7
Port Last Message Response          : 0
Port                                : po21
Ifindex                             : 4621
Port Status                         : Up
Port State                          : Full
Last event                          : LinkComplete
Adjacent Node                       : Dept-A
Adjacent Internal ID                : 29
Adjacent Ifindex                    : 4621
Adjacent Board ID                   : 340
Adjacent MAC                        : eccd.6d20.c1d9
Adjacent Domain Controller          : Dept-A
Adjacent Domain Controller MAC      : eccd.6d20.c1d9
Port Forwarding State               : Forwarding
Port BPDU Receive Count             : 96
Port Sequence Number                : 8
Port Adjacent Sequence Number       : 9
Port Last Message Response          : 0
Special Link Present                : FALSE
```

**Table 53:** Parameter definitions from the **show atmf links detail** command output

| Parameter | Definition |
|---|---|
| `Crosslink Ports Information` | Show details of all Crosslink ports on this Node:<br>• Port - Name of the Port or static aggregation (sa<*>).<br>• Ifindex - Interface index for the crosslink port.<br>• VR ID - Virtual router id for the crosslink port.<br>• Port Status - Status of the local port on the Node as UP or DOWN.<br>• Port State - AMF State of the local port.<br>– Init - Link is down.<br>– Hold - Link transitioned to up state, but waiting for hold period to ensure link is stable.<br>– Incompatible - Neighbor rejected the link because of inconsistency in AMF configurations.<br>– OneWay - Link is up and has waited the hold down period and now attempting to link to<br>– another unit in another domain<br>– Full - Link hello packets are sent and received from its neighbor with its own node id.<br>– Shutdown - Link has been shut down by user configuration.<br>Port BPDU Receive Count - The number of AMF protocol PDU's received.<br>• Adjacent Node Name - The name of the adjacent node connected to this node.<br>• Adjacent Ifindex - Adjacent AMF Node connected to this Node.<br>• Adjacent VR ID - Virtual router id of the adjacent node in the domain.<br>• Adjacent MAC - MAC address of the adjacent node in the domain.<br>• Port Last Message Response - Response from the remote neighbor to our AMF last hello packet. |
| `Link State Entries` | Shows all the link state database entries:<br>• Node.Ifindex - Shows adjacent Node names and Interface index.<br>• Transaction ID - Shows transaction id of the current crosslink transaction.<br>• MAC Address - Shows adjacent Node MAC addresses.<br>• Link State - Shows AMF states of adjacent nodes on the link. |
| `Domain Nodes Tree` | Shows all the nodes in the domain:<br>• Node - Name of the node in the domain.<br>• Links on Node - Number of crosslinks on a vertex/node.<br>• Link no - Shows adjacent Node names and Interface index.<br>• Forwarding State - Shows state of AMF link Forwarding/Blocking. |
| `Crosslink Transaction Entries` | Shows all the transaction entries:<br>• Node - Name of the AMF node.<br>• Transaction ID - transaction id of the node.<br>• Uplink Transaction ID - transaction id of the remote node. |

**Table 53:** Parameter definitions from the **show atmf links detail** command output (cont.)

| Parameter | Definition |
|---|---|
| `Uplink Information` | Show all uplink entries.<br>• Waiting for Sync - Flag if uplinks are currently waiting for synchronization.<br>• Transaction ID - Shows transaction id of the local node.<br>• Number of Links - Number of up downlinks in the domain.<br>• Number of Local Uplinks - Number of uplinks on this node to the parent domain.<br>• Originating Node - Node originating the uplink information.<br>• Domain - Name of the parent uplink domain.<br>• Node - Name of the node in the parent domain, that is connected to the current domain.<br>• Ifindex - Interface index of the parent node's link to the current domain.<br>• VR ID - Virtual router id of the parent node's link to the current domain.<br>• Transaction ID - Transaction identifier for the neighbor in crosslink.<br>• Flags - Used in domain messages to exchange the state:<br>ATMF_DOMAIN_FLAG_DOWN = 0<br>ATMF_DOMAIN_FLAG_UP = 1<br>ATMF_DOMAIN_FLAG_BLOCK = 2<br>ATMF_DOMAIN_FLAG_NOT_PRESENT = 4<br>ATMF_DOMAIN_FLAG_NO_NODE = 8<br>ATMF_DOMAIN_FLAG_NOT_ACTIVE_PARENT = 16<br>ATMF_DOMAIN_FLAG_NOT_LINKS = 32<br>ATMF_DOMAIN_FLAG_NO_CONFIG = 64<br>• Domain Controller - Domain Controller in the uplink domain<br>• Domain Controller MAC - MAC address of Domain Controller in uplink domain |
| `Downlink Domain Information` | Shows all the downlink entries:<br>• Domain - Name of the downlink domain.<br>• Domain Controller - Controller of the downlink domain.<br>• Domain Controller MAC - MAC address of the domain controller.<br>• Number of Links - Total number of links to this domain from the Node.<br>• Number of Links Up - Total number of links that are in UP state.<br>• Number of Links on This Node - Number of links terminating on this node.<br>• Links are Blocked - 0 links are not blocked to the domain. 1 All links are blocked to the domain. |

**Table 53:** Parameter definitions from the **show atmf links detail** command output (cont.)

| Parameter | Definition |
|---|---|
| `Node Transaction List` | List of transactions from this downlink domain node.<br>• Node - 0 links are not blocked to the domain. 1 All links are blocked to the domain.<br>• Transaction ID - Transaction id for this node.<br>• Domain List: Shows list of nodes in the current domain and their links to the downlink domain.:<br>• Domain - Domain name of the downlink node.<br>• Node - Name of the node in the current domain.<br>• Ifindex - Interface index for the link from the node to the downlink domain.<br>• Transaction ID - Transaction id of the node in the current domain.<br>• Flags - As mentioned above. |
| `Up/Downlink Ports Information` | Shows all the configured up and down link ports on this node:<br>• Port - Name of the local port.<br>• Ifindex - Interface index of the local port.<br>• VR ID - Virtual router id for the local port.<br>• Port Status - Shows status of the local port on the Node as UP/DOWN.<br>• Port State - AMF state of the local port.<br>• Adjacent Node - nodename of the adjacent node.<br>• Adjacent Internal ID - Unique node identifier of the remote node.<br>• Adjacent Ifindex - Interface index for the port of adjacent AMF node.<br>• Adjacent Board ID - Product identifier for the adjacent node.<br>• Adjacent VR ID - Virtual router id for the port on adjacent AMF node.<br>• Adjacent MAC - MAC address for the port on adjacent AMF node.<br>• Adjacent Domain Controller - nodename of the Domain controller for Adjacent AMF node.<br>• Adjacent Domain Controller MAC - MAC address of the Domain controller for Adjacent AMF node.<br>• Port Forwarding State - Local port forwarding state Forwarding or Blocking.<br>• Port BPDU Receive Count - count of AMF protocol PDU's received.<br>• Port Sequence Number - hello sequence number, incremented every time the data in the hello packet changes.<br>• Port Adjacent Sequence Number - remote ends sequence number used to check if we need to process this packet or just note it arrived.<br>• Port Last Message Response - response from the remote neighbor to our last hello packet. |

For information on filtering and saving command output, see the "Getting Started with AlliedWare Plus" Feature Overview and Configuration Guide.

**Related commands**

no debug all

clear atmf links statistics

show atmf

# show atmf links guest

**Overview** This command displays information about guest nodes visible to an AMF device.

**Syntax** `show atmf links guest [interface <interface-range>]`

| Parameter | Description |
|---|---|
| `interface <interface-range>` | Select a specific range of ports to display information about guest nodes. |

**Default** With no parameters specified this command will display its standard output for all ports with guest nodes connected.

**Mode** User Exec/Privileged Exec

**Usage notes** Use this command to display the guest nodes connected to a single parent node. If you want to see a list of all the guests in the AMF network, use show atmf guests.

**Example 1** To display information about AMF guests that are connectible from node1, use the command:

```
node1# show atmf links guest
```

**Output** Figure 51-26: Example output from **show atmf links guest**

```
node1#sh atmf links guest

Guest Link Information:

DC = Discovery configuration
  S = static D = dynamic

Local     Guest          Model        MAC              IP / IPv6
Port      Class          Type      DC Address          Address
----------------------------------------------------------------
1.0.1     -              other     D  0013.1a1e.4589   192.168.1.2
1.0.2     aastra-phone   other     D  0008.5d10.7635   192.168.1.3
1.0.3     cisco-phone2   other     S  -                 192.168.2.1
1.0.4     panasonic...   other     D  0800.239e.f1fe   192.168.1.5
```

Table 51-1: Parameters in the output from **show atmf links guest**

| Parameter | Description |
|---|---|
| `Local Port` | The port on the parent node that connects to the guest. |
| `Guest Class` | The name of the ATMF guest-class that has been assigned to the guest node by the atmf guest-class command. |

Table 51-1: Parameters in the output from **show atmf links guest** (cont.)

| Parameter | Description |
|---|---|
| `Model Type` | The model type of the guest node, as entered by the modeltype command. Can be one of the following:<br>• alliedware<br>• aw+<br>• tq<br>• other |
| `DC` | The discovery method as applied by the discovery command. This can be either dynamic (D) or static (S). |
| `MAC Address` | The MAC address of the guest node. |
| `IP / IPv6 Address` | The IP address of the guest node. |

**Related commands**

atmf guest-class

discovery

http-enable

username

modeltype

switchport atmf-guestlink

show atmf backup guest

# show atmf links guest detail

**Overview** This command displays detailed information about guest nodes visible to an AMF device.

**Syntax**

```
show atmf links guest detail [interface <interface-range>]
```

| Parameter | Description |
|---|---|
| `interface <interface-range>` | Select a specific range of ports to display information about guest nodes. |

**Mode** User Exec and Privileged Exec

**Usage notes** Use this command to display the guest nodes connected to a single parent node. If you want to see a list of all the guests in the AMF network, use show atmf guests detail.

Note that the parameters that are displayed depend on the guest node's model and state.

**Example** To display detailed information about AMF guests, use the command:

```
node1# show atmf links guest detail
```

**Output** Figure 51-27: Example output from **show atmf links guest detail**

```
node1#show atmf links guest detail

Detailed Guest Link Information:

Interface                          : port1.0.13
Link State                         : Down
Class Name                         : test
Model Type                         : Other
Discovery Method                   : Static
IP Address                         : 192.168.1.13
Node State                         : Down

Interface                          : port1.0.5
Link State                         : Full
Class Name                         : tq_device
Model Type                         : TQ
Discovery Method                   : Dynamic
IP Address                         : 192.168.1.221
Username                           : manager
Login Fallback                     : Yes
Node State                         : Full
Backup Supported                   : Yes
MAC address                        : 001a.ebab.d2e0
Device Type                        : AT-TQ4600
Description                        : AP221
Firmware Version                   : 3.2.1 B02
HTTP port                          : 80
```

Table 51-2: Parameters in the output from **show atmf links guest detail**

| Parameter | Description |
|---|---|
| `Interface` | The port on the parent node that connects to the guest. |
| `Link State` | The state of the link to the guest node; one of:<br>• Down: The physical link is down.<br>• Up: The physical link has come up, but it is still during a timeout period that is enforced to allow other links to come up.<br>• Learn: The timeout period described above has elapsed, and the link is now learning information from the AMF guest node. You can see what information it is learning from the "Node State" field below.<br>• Full: The node connected by this link has joined the AMF network.<br>• Fail: The port is physically up but something has prevented the guest node from joining the AMF network. |
| `Class Name` | The name of the ATMF guest-class that has been assigned to the guest node by the atmf guest-class command. |

Table 51-2: Parameters in the output from **show atmf links guest detail** (cont.)

| Parameter | Description |
|---|---|
| `Model Type` | The model type of the guest node, as entered by the modeltype command. The mode type can be one of the following:<br>• alliedware<br>• aw+<br>• onvif<br>• tq<br>• other |
| `Discovery Method` | The discovery method as applied by the discovery command. This can be either dynamic or static. |
| `IP Address` | The IP address of the guest node. |
| `Username` | The user name configured on the guest node. |
| `Login Fallback` | Whether the guest node supports Login Fallback. For TQ model guest nodes, when login fallback is enabled, if a guest node is replaced, then AMF logs in to the new TQ using the factory default manager/friend settings. The new TQ is then discovered and managed as an AMF guest node by an AMF master or member. This means any backed up settings for the replaced guest node can also be recovered. |
| `Node state` | The state of the guest node; one of:<br>• Down: The initial state when a link to a guest node is first configured. This is also the state if the physical link goes down.<br>• Getting IP: The AMF device is in the process of retrieving the IP address of the guest node.<br>• Getting Mac: The AMF device is in the process of retrieving the MAC address of the guest node.<br>• Getting Info: The AMF device is in the process of retrieving any other available information from the guest (firmware version etc). The information available depends on what device the guest node is.<br>• Full: The AMF device has retrieved all necessary information and the guest node has joined the AMF network. Once this state is reached, the Link State also changes to “Full”.<br>• Failure: The physical link is up but the AMF member has failed to retrieve enough information to allow the guest node to join the AMF network. |
| `Backup Supported` | Whether the guest node supports AMF backup functionality. |
| `MAC Address` | The MAC address of the guest node. |

Table 51-2: Parameters in the output from **show atmf links guest detail** (cont.)

| Parameter | Description |
|---|---|
| `Device Type` | Model information for the guest node. This field shows the model information that AMF retrieved from the guest node. In contrast, the Model Type shows what a user entered as the type of device they intended this guest node to be. |
| `Description` | By default, this is a concatenation of the guest node's parent node and the port to which it is attached. You can change it by configuring a description on the port. |
| `Serial Number` | The serial number of the guest node. |
| `Firmware Name` | The name of the firmware operating on the guest node. |
| `Firmware Version` | The version of the firmware operating on the guest node. |
| `HTTP port` | The HTTP port as specified with the http-enable command when defining a guest class. You can set this if the guest node provides an HTTP user interface on a non-standard port (any port other than port 80). |

**Related commands**

atmf guest-class

discovery

http-enable

username

modeltype

switchport atmf-guestlink

show atmf backup guest

**Command changes**

Version 5.5.0-1.1: **Login Fallback** parameter added

# show atmf links statistics

**Overview** This command displays details of the AMF links configured on the device and also displays statistics about the AMF packet exchanges between the devices.

It is also possible to display the AMF link configuration and packet exchange statistics for a specified interface.

This command can only be run on AMF master and controller nodes

**Syntax**

```
show atmf links statistics [interface [<port-number>]]
```

| Parameter | Description |
|---|---|
| `interface` | Specifies that the command applies to a specific interface (port) or range of ports. Where both the interface and port number are unspecified, full statistics (not just those relating to ports will be displayed. |
| `<port-number>` | Enter the port number for which statistics are required. A port range, a static channel or LACP link can also be specified. Where no port number is specified, statistics will be displayed for all ports on the device. |

**Mode** User Exec

**Example 1** To display AMF link statistics for the whole device, use the command:

```
device1# show atmf links statistics
```

**Table 52:** Sample output from the **show atmf links statistics** command

```
ATMF Statistics:

                                   Receive        Transmit
------------------------------------------------------------------------------
Arealink Hello                       318            327
Crosslink Hello                      164            167
Crosslink Hello Domain               89             92
Crosslink Hello Uplink               86             88
Hello Link                           0              0
Hello Neighbor                       628            630
Hello Stack                          0              0
Hello Gateway                        1257           1257
Database Description                 28             28
Database Request                     8              6
Database Update                      66             162
Database Update Bitmap               0              29
Database Acknowledge                 144            51
```

**Table 52:** Sample output from the **show atmf links statistics** command (cont.)

```
Transmit Fails                      0              1
Discards                            0              0
Total ATMF Packets                  2788           2837

ATMF Database Statistics:

Database Entries                    18
Database Full Ages                  0
ATMF Virtual Link Statistics:

Virtual                             Receive                     Transmit
link                   Receive      Dropped      Transmit       Dropped
-------------------------------------------------------------------------------
vlink2000              393          0            417            0

ATMF Packet Discards:
Type0   0            : Gateway hello msg received from unexpected neighbor
Type1   0            : Stack hello msg received from unexpected neighbor
Type2   0            : Discard TX update bitmap packet - bad checksum
Type3   0            : Discard TX update packet - neighbor not in correct state
Type4   0            : Discard update packet - bad checksum or type
Type5   0            : Discard update packet - neighbor not in correct state
Type6   0            : Discard update bitmap packet - bad checksum or type
Type7   0            : Incarnation is not possible with the data received
Type8   0            : Discard crosslink hello received - not correct state
Type9   0            : Discard crosslink domain hello received on non crosslink
Type10  0            : Discard crosslink domain hello - not in correct state
Type11  0            : Crosslink uplink hello received on non crosslink port
Type12  0            : Discard crosslink uplink hello - not in correct state
Type13  0            : Wrong network-name for this ATMF
Type14  0            : Packet received on port is too long
Type15  0            : Bad protocol version, received on port
Type16  0            : Bad packet checksum calculation
Type17  0            : Bad authentication type
Type18  0            : Bad simple password
Type19  0            : Unsupported authentication type
Type20  0            : Discard packet - unknown neighbor
Type21  0            : Discard packet - port is shutdown
Type22  0            : Non broadcast hello msg received from unexpected neighbor
Type23  0            : Arealink hello msg received on non arealink port
Type24  0            : Discard arealink hello packet - not in correct state
Type25  0            : Discard arealink hello packet - failed basic processing
Type26  0            : Discard unicast packet - MAC address does not match node
Type27  0            : AMF Master license node limit exceeded
```

**Example 2** To display the AMF links statistics on interface port1.0.4, use the command:

```
device1# show atmf links statistics interface port1.0.4
```

Figure 51-28: Sample output from the **show atmf links statistics** command for interface port1.0.4

```
device1# show atmf links statistics interface port1.0.4

ATMF Port Statistics:

                                          Transmit       Receive
-----------------------------------------------------------------
port1.0.4  Crosslink Hello                   231            232
port1.0.4  Crosslink Hello Domain            116            116
port1.0.4  Crosslink Hello Uplink            116            115
port1.0.4  Hello Link                        0              0
port1.0.4  Arealink Hello                    0              0
```

Figure 51-29: Parameter definitions from the **show atmf links statistics** command output

| Parameter | Definition |
|---|---|
| Receive | Shows a count of AMF protocol packets received per message type. |
| Transmit | Shows the number of AMF protocol packets transmitted per message type. |
| Database Entries | Shows the number of AMF elements existing in the distributed database. |
| Database Full Ages | Shows the number of times the entries aged in the database. |
| ATMF Packet Discards | Shows the number of discarded packets of each type. |

For information on filtering and saving command output, see the "Getting Started with AlliedWare Plus" Feature Overview and Configuration Guide.

**Related commands**

no debug all

clear atmf links statistics

show atmf

# show atmf nodes

**Overview** This command displays nodes currently configured within the AMF network.

Note that the output also tells you whether or not node map exchange is active. Node map exchange improves the tracking of nodes joining and leaving an AMF network. This improves the efficiency of AMF networks. Node map exchange is only available if every node in your AMF network is running version 5.4.6-2.1 or later. We recommend running the latest version on all nodes in your network, so you receive the advantages of node map exchange and other improvements.

**Syntax**

```
show atmf nodes [guest|all]
```

| Parameter | Description |
|---|---|
| `guest` | Display only guest nodes in the AMF network. |
| `all` | Display all nodes in the AMF network, including guest nodes. |

**Mode** Privileged Exec

**Usage notes** You can use this command to display one of three sets of nodes:

- all nodes except guest nodes, by specifying **show atmf nodes**
- all nodes including guest nodes, by specifying **show atmf nodes all**
- only guest nodes, by specifying **show atmf nodes guest**

**Examples** To display AMF information for all nodes except guest nodes, use the command:

```
node1# show atmf nodes
```

Table 51-1: Sample output from **show atmf nodes**

```
node1#show atmf nodes guest

Node Information:

  * = Local device

 SC = Switch Configuration:
  C = Chassis    S = Stackable    N = Standalone

  Node                  Device              ATMF          Parent                Node
  Name                  Type                Master   SC   Domain                Depth
-------------------------------------------------------------------------------
* M1                    x510-28GTX            Y      S    none                    0
  N3                    x230-18GP             N      N    M1                      1
  N1                    AR4050S               N      N    M1                      1

 Node map exchange is active
 Current ATMF node count 3
```

To display AMF information for all nodes, including guest nodes, use the command:

```
node1# show atmf nodes all
```

**Table 52:** Sample output from **show atmf nodes all**. In this example, not all nodes support node map exchange, as shown by the message at the end

```
node1#show atmf nodes all

 Node and Guest Information:

  * = Local device

 SC = Switch Configuration:
  C = Chassis   S = Stackable   N = Standalone G = Guest

  Node/Guest           Device             ATMF         Parent              Node
  Name                 Type               Master  SC   Domain              Depth
-------------------------------------------------------------------------------
* M1                   x510-28GTX           Y     S    none                  0
  N3                   x230-18GP            N     N    M1                    1
  N1                   AR4050S              N     N    M1                    1
  N3-1.0.24            AT-TQ4600            N     G    N3                    -

Node map exchange is inactive
Firmware on some nodes does not support node map exchange, eg AR4050S
Current ATMF node count 4 (guests 1)
```

To display AMF information for guest nodes only, use the command:

```
node1# show atmf nodes guest
```

Table 51-1: Sample output from **show atmf nodes guest**

```
node1#show atmf nodes guest

Guest Information:
Device        MAC                                        IP/IPv6
Name          Address         Parent            Port     Address
-------------------------------------------------------------------------------
aastra-...    0008.5d10.7635  Node-1            1.0.2    192.168.4.7
poe-1.0.1     0013.1a1e.4589  Node-1            1.0.1    192.168.4.6
ip-camera     0800.239e.f1fe  Node-1            1.0.4    192.168.4.8
tq4600        eccd.6df2.da60  Node-1            1.0.5    192.168.4.50
```

**Related commands**

show atmf

show atmf area nodes

discovery

http-enable

show atmf backup guest

# show atmf provision nodes

**Overview** This command displays information about each provisioned node with details about date and time of creation, boot and configuration files available in the backup, and license files present in the provisioned backup. This includes nodes that have joined the network but are yet to run their first backup.

This command can only be run on AMF master and controller nodes.

**Syntax** `show atmf provision nodes`

**Mode** Privileged Exec

**Usage notes** This command will only work if provisioned nodes have already been set up. Otherwise, an error message is shown when the command is run.

**Example** To show the details of all the provisioned nodes in the backup use the command:

```
NodeName# show atmf provision nodes
```

Figure 51-30: Sample output from the **show atmf provision nodes** command

```
device1#show atmf provision nodes

ATMF Provisioned Node Information:

Backup Media .............: SD (Total 3827.0MB, Free 3481.1MB)

Node Name                 : device2
Date& Time                : 06-Oct-2016 & 23:25:44
Provision Path            : card:/atmf/provision_nodes

Boot configuration :
Current boot image        : x510-5.4.9-0.1.rel (file exists)
Backup  boot image        : x510-5.4.8-2.3.rel (file exists)
Default boot config       : flash:/default.cfg (file exists)
Current boot config       : flash:/abc.cfg (file exists)
Backup  boot config       : flash:/xyz.cfg (file exists)

Software Licenses :
Repository file           : ./.configs/.sw_v2.lic
                          : ./.configs/.swfeature.lic
Certificate file          : card:/atmf/nodes/awplus1/flash/.atmf-lic-cert
```

**Related commands**

atmf provision (interface)

atmf provision node

clone (amf-provision)

configure boot config (amf-provision)

configure boot system (amf-provision)

create (amf-provision)

delete (amf-provision)

identity (amf-provision)

license-cert (amf-provision)

locate (amf-provision)

# show atmf recovery-file

**Overview** Use this command to display the recovery file information for an AMF node.

AMF recovery files are created for nodes with special links. Special links include:

- virtual links,
- area links terminating on an AMF master, and
- area virtual links terminating on an AMF master.

**Syntax** `show atmf recovery-file`

**Mode** Privileged Exec

**Example** To display recovery file information for an AMF node, use the command:

```
node1# show atmf recovery-file
```

**Output** Figure 51-31: Example output from **show atmf recovery-file**

```
node1#show atmf recovery-file

ATMF Recovery File Info: Special Link Present
Location                      Date         Time
USB storage device            30 Apr 2018  14:50:32
Master                        30 Apr 2018  14:56:45
node1                         30 Apr 2018  14:56:45
node3                         30 Apr 2018  14:56:45
```

**Related commands** clear atmf recovery-file

show atmf backup

**Command changes** Version 5.4.8-0.2: command added

# show atmf secure-mode

**Overview** Use this command to display an overview of the secure mode status of an AMF network.

**Syntax** `show atmf secure-mode`

**Mode** Privileged Exec

**Example** To display an overview of AMF secure mode on an AMF master or member node, use the command:

```
awplus# show atmf secure-mode
```

**Output** Figure 51-32: Example output from **show atmf secure-mode** on an AMF master

```
ATMF Secure Mode:

Secure Mode Status                : Enabled
Certificate Expiry                : 180 Days
Certificates Total                : 8
Certificates Revoked              : 0
Certificates Rejected             : 0
Certificates Active               : 8

Provisional Authorization         : 0
Pending Requests                  : 0

Trusted Master                    : master_1
Trusted Master                    : master_2

Key Fingerprint:
  48:37:d9:a0:37:32:22:9b:5c:22:da:a2:62:49:a7:e5:a9:bc:12:88
```

Figure 51-33: Example output from **show atmf secure-mode** on an AMF node

```
ATMF Secure Mode:

Secure Mode Status                : Enabled
Trusted Master                    : master_1
Trusted Master                    : master_2

Key Fingerprint:
  93:f0:52:a9:74:8f:ae:ea:5b:e2:ee:62:cb:6b:21:22:5a:08:db:98
```

Table 51-2: Parameters in the output from **show atmf secure-mode**

| Parameter | Description |
|---|---|
| `Secure Mode Status` | Shows the status of secure mode, `Enabled` or `Disabled`. |
| `Certificate Expiry` | Certificate expiry time. Set with atmf secure-mode certificate expiry |
| `Certificates Total` | Total number of certificates. |
| `Certificates Revoked` | Certificates that have been revoked by the AMF master. |
| `Certificates Rejected` | Certificates that have been rejected by the AMF master. |
| `Certificates Active` | Certificates that are currently active. |
| `Provisional Authorization` | Number of nodes with provisional authorization. For more information use the show atmf authorization **provisional** command. |
| `Pending Requests` | Number of nodes waiting for authorization on the AMF master. For more information use the show atmf authorization **pending** command. |
| `Trusted Master` | List of trusted masters in the AMF area. |
| `Key Fingerprint` | The AMF node's key fingerprint. |

**Related commands**

atmf authorize

atmf secure-mode

atmf secure-mode certificate expiry

show atmf authorization

show atmf secure-mode audit link

**Command changes**

Version 5.4.7-0.3: command added

# show atmf secure-mode audit

**Overview** Use this command to detect security vulnerabilities on a node.

**Syntax** `show atmf secure-mode audit`

**Mode** Privileged Exec

**Example** To display AMF secure mode link audits for a node, use the command

```
awplus# show atmf secure-mode audit
```

**Output** Figure 51-34: Example output from **show atmf secure-mode audit**

```
ATMF Secure Mode Audit:

Warning   : The default username and password is enabled.
Good      : SNMP V1 or V2 is disabled.
Warning   : Telnet server is enabled.
Good      : ATMF is enabled. Secure-Mode is on.
Good      : ATMF Topology-GUI is disabled. No trustpoints configured.

ATMF Secure Mode Log Events:

---------------------------------------------------------------------------
2017 Feb 2 00:59:25 user.notice node1 ATMF[848]: Sec_Audit - ATMF Secure
Mode is enabled.
2017 Feb 2 01:30:00 user.notice node1 ATMF[848]: Sec_Audit - Established
secure connection to area_1_node_1 on interface vlink1.
```

Table 51-3: Parameters in the output from **show atmf secure-mode audit link**

| Parameter | Description |
|---|---|
| `ATMF Secure Mode Audit` | A list of security recommendations to secure the AMF network. Items prefaced with `Warning` need to be fixed. In the sample above the default username and password, and telnet, should be disabled. |
| `ATMF Secure Mode Log Events` | A list of recorded secure mode log events. |

**Related commands** show atmf secure-mode

**Command changes** Version 5.4.7-0.3: command added

# show atmf secure-mode audit link

**Overview** Use this command to detect security vulnerabilities by identifying devices that are connected to a secure mode node that are not in secure mode or are not authorized.

**Syntax**

```
show atmf secure-mode audit link
```

**Mode** Privileged Exec

**Example** To display AMF secure mode link audits for a node, use the command

```
awplus# show atmf secure-mode audit link
```

**Output** Figure 51-35: Example output from **show atmf secure-mode audit link**

```
ATMF Secure Mode Audit Link:

 * ATMF links connected to devices which are not authorized
   or are not in secure-mode.

Port       Link Type  Discovered           Node/Area Name
-------------------------------------------------------
vlink1     Downlink   16/02/2017 09:28:22  Member3
```

Table 51-4: Parameters in the output from **show atmf secure-mode audit link**

| Parameter | Description |
|---|---|
| Port | Port name on local device. |
| Link Type | Link type. |
| Discovered | Date discovered |
| Node/Area Name | Node or area name of remote device. |

**Related commands** show atmf

show atmf secure-mode

**Command changes** Version 5.4.7-0.3: command added

# show atmf secure-mode certificates

**Overview** Use this command to display the certificate status details when secure mode is enabled on an AMF network.

**Syntax**

```
show atmf secure-mode certificates [detail] [area <area-name>]
[node <node-name>]
```

| Parameter | Description |
|---|---|
| `detail` | Display detailed certificate information. |
| `area` | Specify an AMF area. |
| `<area-name>` | The AMF area you want to see the certificate information for. |
| `node` | Specify an AMF node. |
| `<node-name>` | The AMF node you want to see information for. |

**Mode** Privileged Exec

**Example** To display AMF secure mode certificates on a master or member node, use the command:

```
awplus# show atmf secure-mode certificates
```

To display detailed information about AMF secure mode certificates for a node named “area_2_node_1” in an area named “area-2”, use the command:

```
awplus# show atmf secure-mode certificates detail area area-2
node area_2_node_1
```

**Output** Figure 51-36: Example output from **show atmf secure-mode certificates**

```
  Area-1 Certificates:
  Node Name             Signer                Expires               Status
-------------------------------------------------------------------------------
  area_1_node_1         master_1              11 Mar 2017
                        master_2              4 Mar 2017            Active
  area_1_node_2         master_1              11 Mar 2017
                        master_2              4 Mar 2017            Revoked

  Area-2 Certificates:
  Node Name             Signer                Expires               Status
-------------------------------------------------------------------------------
  area_2_node_1         master_1              18 Mar 2017           Active
  area_2_node_2         master_1              18 Mar 2017           Rejected
```

Table 51-5: Parameters in the output from **show atmf secure-mode certificates**

| Parameter | Description |
|---|---|
| `Node Name` | Name of AMF node the certificate was issued to. |
| `Signer` | Name of AMF master that issued the certificate. |
| `Expires` | Certificate expiry date. |
| `Status` | The status column will display `Active` before a member node is trusted, and can be accessed using AMF commands. Valid statuses are `Active`, `Revoked`, and `Rejected`. |

**Output** Figure 51-37: Example output from **show atmf secure-mode certificates detail area area-2 node area_2_node_1**

```
 Certificates Detail:

-------------------------------------------------------------------------------
area_2_node_1 (area:area-2)
  MAC Address     : 0000.cd37.0003
  Status          : Active
  Serial Number   : A24SC8001
  Product         : x510-28GTX
  Key Fingerprint : cd:b4:c9:cd:7b:87:6a:30:98:25:d7:3c:89:8e:cb:74:e8:91:56:9d
  Flags           : 00000011
  Signer          : master_1
  Expiry Date     : 18 Mar 2017 21:17:42
```

Table 51-6: Parameters in the output from **show atmf secure-mode certificates detail**

| Parameter | Description |
|---|---|
| `MAC Address` | MAC address of AMF node. |
| `Status` | The device status will show `Active` if a member node is trusted, and can be accessed using AMF commands. Valid statuses are `Active`, `Revoked`, and `Rejected`. |
| `Serial Number` | Device serial number. |
| `Product` | Device product type. |
| `Key Fingerprint` | AMF node key fingerprint. |
| `Flags` | Internal AMF information. |
| `Signer` | Name of AMF master that issued the certificate. |
| `Expiry Date` | Certificate expiry date. |

**Related commands**

atmf authorize

atmf secure-mode

atmf secure-mode certificate expire

atmf secure-mode certificate renew

clear atmf secure-mode certificates

show atmf secure-mode sa

**Command changes**

Version 5.4.7-0.3: command added

# show atmf secure-mode sa

**Overview** Use this command to display the security associations on the network. This is the list of links and neighbors that are trusted.

**Syntax**

```
show atmf secure-mode sa [detail] [link|neighbor|broadcast]
```

| Parameter | Description |
|---|---|
| `detail` | Display detailed security association information. |
| `link` | Display security associations for type links. |
| `neighbor` | Display security associations for type neighbors. |
| `broadcast` | Display security associations for type broadcast. |

**Mode** Privileged Exec

**Example** To display an overview of AMF secure mode security associations on a master or member node, use the command:

```
awplus# show atmf secure-mode sa
```

To display a detailed overview of AMF secure mode neighbor security associations on a master or member node, use the command:

```
awplus# show atmf secure-mode sa detail neighbor
```

**Output** Figure 51-38: Example output from **show atmf secure-mode sa**

```
  ATMF Security Associations:

  Type                        State           ID            Details
-------------------------------------------------------------------------------
  Neighbor Node               Complete        175           master_1
  Broadcast                   Complete        4095
  CrossLink                   Complete        4501          sa1
  AreaLink                    Cert Exchg      4511          sa11
  Link                        Complete        6009          port1.2.9
  AreaLink                    CA Exchg Init   6013          port1.2.13
  AreaLink                    Cert Exchg      13001         port1.9.1
  Link                        CA Exchg Init   16779521      vlink3
  Neighbor Gateway            Complete        83            master_2
  Neighbor Gateway            Complete        175           master_1
  Neighbor Cntl-Master        Complete        83            master_2
  Neighbor Cntl-Master        Complete        175           master_1
```

Figure 51-39: Example output from **show atmf secure-mode sa detail neighbor**

```
 Security Associations Detail:

----------------------------------------------------------------
Id                      : 175 (af)
  Type                  : Neighbor Node
  State                 : Complete
  Remote MAC Address    : eccd.6d82.6c16
  Flags                 : 000003c0

Id                      : 83 (40000053)
  Type                  : Neighbor Gateway
  State                 : Complete
  Remote MAC Address    : 001a.eb54.e53b
  Flags                 : 000003c0

Id                      : 175 (400000af)
 Type                   : Neighbor Gateway
 State                  : Complete
 Remote MAC Address     : eccd.6d82.6c16
 Flags                  : 000003c0

Id                      : 83 (80000053)
 Type                   : Neighbor Cntl-Master
 State                  : Complete
 Remote MAC Address     : 001a.eb54.e53b
 Flags                  : 000003c0

Id                      : 175 (800000af)
 Type                   : Neighbor Cntl-Master
 State                  : Complete
 Remote MAC Address     : eccd.6d82.6c16
 Flags                  : 000003c0

Id                      : 321 (80000141)
 Type                   : Neighbor Cntl-Master
 State                  : Complete
 Remote MAC Address     : 0000.f427.93da
 Flags                  : 000003c0
```

Table 51-7: Parameters in the output from **show atmf secure-mode sa**

| Parameter | Description |
|---|---|
| `Type` | Security Association (SA) types:<br>• Link - SA for link<br>• CrossLink - SA for crosslink<br>• AreaLink - SA for area link<br>• Neighbor Node - SA for node neighbor relationship<br>• Neighbor Gateway - SA for gateway neighbor relationship<br>• Neighbor Cntl-Master - SA for controller/master neighbor relationship<br>• Broadcast - SA for working-set broadcast requests |
| `State` | Current state of the Security Association. The state must be `Complete` before a member node is trusted, and can be accessed using AMF commands.<br>• CA Exchg Init - SA is ready to begin the SA exchange process<br>• CA Exchg - SA is currently exchanging CAs<br>• Cert Exchg - SA is currently exchanging certificates<br>• Key Exchg - SA is currently exchanging ephemeral keys<br>• Complete - SA exchange has completed |
| `ID` | Security Association ID.<br>• For Neighbor types this is the remote node ID.<br>• For Link types this is the local ifindex.<br>• For Broadcast type this is always 4095. |
| `Details` | Human readable translation of ID.<br>• For Neighbor types this is the node name<br>• For Link types this is the interface name |
| `Remote MAC Address` | MAC address of the remote partner of the security association. |
| `Flags` | Internal AMF information. |

**Related commands**

atmf secure-mode

show atmf secure-mode

show atmf secure-mode certificates

**Command changes**

Version 5.4.7-0.3: command added

# show atmf secure-mode statistics

**Overview** Use this command to display AMF secure mode statistics. These statistics are from when AMF secure mode was first enabled or the statistics were cleared with the clear atmf secure-mode statistics command.

**Syntax**

```
show atmf secure-mode statistics
```

**Mode** Privileged Exec

**Example** To display AMF secure mode statistics on a master or member node, use the command:

```
awplus# show atmf secure-mode statistics
```

**Output** Figure 51-40: Example output from **show atmf secure-mode statistics** on an AMF master.

```
ATMF Secure Mode Statistics:

Certificates:
New ............ 7              Expired .......... 0
Updated ......... 7              Deleted .......... 0
Revoked ......... 1              Renewed .......... 2
Rejected ........ 1              Re-authorized .... 1
Authorized ...... 0


Local Certificates:
Valid ........... 4              Invalid  ......... 0
Certificates Validation:
Request Valid ..................................... 2
Request Invalid ................................... 0
Common Valid ...................................... 13
Common Invalid .................................... 0
Issuer Valid ...................................... 14
Issuer Invalid .................................... 0
Signature Verified ................................ 29
Signature Invalid ................................. 0
Signature Purpose Invalid ......................... 0

Signatures Signed ................................. 12
Master Certificates:
Re-issued ......................................... 3
Downgraded to member .............................. 0

Public key change ................................. 2
Invalid SA public key ............................. 0
```

**Output** Figure 51-41: Example output from **show atmf secure-mode statistics** on an AMF node.

```
ATMF Secure Mode Statistics:


Local Certificates:
Valid ........... 3              Invalid  ......... 0


Certificates Validation:
Request Valid ..................................... 0
Request Invalid ................................... 0
Common Valid ...................................... 0
Common Invalid .................................... 0
Issuer Valid ...................................... 12
Issuer Invalid .................................... 0
Signature Verified ................................ 12
Signature Invalid ................................. 3
Signature Purpose Invalid ......................... 0

Signatures Signed ................................. 0

Master Certificates:
Re-issued ......................................... 0
Downgraded to member .............................. 0

Public key change ................................. 2
Invalid SA public key ............................. 0
```

**Related commands**

atmf authorize

atmf secure-mode

atmf secure-mode certificate renew

clear atmf secure-mode statistics

show atmf secure-mode

**Command changes** Version 5.4.7-0.3: command added

# show atmf tech

**Overview** This command collects and displays all the AMF command output. The command can thus be used to display a complete picture of an AMF network.

**Syntax** `show atmf tech`

**Mode** Privileged Exec

**Example** To display output for all AMF commands, use the command:

```
NodeName# show atmf tech
```

**Table 52:** Sample output from the **show atmf tech** command.

```
node1#show atmf tech
ATMF Summary Information:

ATMF Status            : Enabled
Network Name           : ATMF_NET
Node Name              : node1
Role                   : Master
Current ATMF Nodes     : 8

ATMF Technical information:

Network Name                        : ATMF_NET
Domain                              : node1's domain
Node Depth                          : 0
Domain Flags                        : 0
Authentication Type                 : 0
MAC Address                         : 0014.2299.137d
Board ID                            : 287
Domain State                        : DomainController
Domain Controller                   : node1
Backup Domain Controller            : node2
Domain controller MAC               : 0014.2299.137d
Parent Domain                       : -
Parent Domain Controller            : -
Parent Domain Controller MAC        : 0000.0000.0000
Number of Domain Events             : 0
Crosslink Ports Blocking            : 0
Uplink Ports Waiting on Sync        : 0
```

**Table 52:** Sample output from the **show atmf tech** command. (cont.)

```
Crosslink Sequence Number          : 7
Domains Sequence Number            : 28
Uplink Sequence Number             : 2
Number of Crosslink Ports          : 1
Number of Domain Nodes             : 2
Number of Neighbors                : 5
Number of Non Broadcast Neighbors  : 3
Number of Link State Entries       : 1
Number of Up Uplinks               : 0
Number of Up Uplinks on This Node  : 0
DBE Checksum                       : 84fc6
Number of DBE Entries              : 0
...
```

**Table 53:** Parameter definitions from the **show atmf tech** command

| Parameter | Definition |
|---|---|
| ATMF Status | Shows status of AMF feature on the Node as Enabled/Disabled. |
| Network Name | The name of the AMF network to which this node belongs. |
| Node Name | The name assigned to the node within the AMF network. |
| Role | The role configured on the device within the AMF - either master or member. |
| Current ATMF Nodes | A count of the AMF nodes in the AMF network. |
| Node Address | The identity of a node (in the format name.atmf) that enables its access it from a remote location. |
| Node ID | A unique identifier assigned to an AMF node. |
| Node Depth | The number of nodes in the path from this node to the core domain. |
| Domain State | A node's state within an AMF Domain - either controller or backup. |
| Recovery State | The AMF node recovery status. Indicates whether a node recovery is in progress on this device - either Auto, Manual, or None. |
| Management VLAN | The VLAN created for traffic between nodes of different domains (up/down links).<br>VLAN ID - In this example VLAN 4092 is configured as the Management VLAN.<br>Management Subnet - the Network prefix for the subnet.<br>Management IP Address - the IP address allocated for this traffic.<br>Management Mask - the Netmask used to create a subnet for this traffic 255.255.128.0 (= prefix /17) |

**Table 53:** Parameter definitions from the **show atmf tech** command (cont.)

| Parameter | Definition |
|---|---|
| `Domain VLAN` | The VLAN assigned for traffic between Nodes of same domain (crosslink).<br>VLAN ID - In this example VLAN 4091 is configured as the domain VLAN.<br>Domain Subnet - the Subnet address used for this traffic.<br>Domain IP Address - the IP address allocated for this traffic.<br>Domain Mask - the Netmask used to create a subnet for this traffic 255.255.128.0 (= prefix /17) |
| `Device Type` | Shows the Product Series Name. |
| `ATMF Master` | Indicates the node's membership of the core domain (membership is indicated by Y) |
| `SC` | Shows switch configuration:<br>• C - Chassis (such as SBx8100 series)<br>• S - Stackable (VCS)<br>• N - Standalone |
| `Parent` | A node that is connected to the present node's uplink, i.e. one layer higher in the hierarchy. |
| `Node Depth` | Shows the number of nodes in path from the current node to the Core domain. |

***NOTE:*** *The **show atmf tech** command can produce very large output. For this reason only the most significant terms are defined in this table.*

# show atmf virtual-links

**Overview** This command displays a summary of all virtual links (L2TP tunnels) currently in the running configuration.

**Syntax**

```
show atmf virtual-links [macaddr]
show atmf virtual-links [id <1-4094>] [remote-id <1-4094>]
show atmf virtual-links detail [id <1-4094>]
```

| Parameter | Description |
|---|---|
| `macaddr` | Display the virtual AMF links' MAC addresses. |
| `id <1-4094>` | ID of the local virtual link. |
| `remote-id <1-4094>` | ID of the remote virtual link |
| `detail` | Display information about a specific virtual link ID or range of virtual link IDs. Displays information such as: local and remote IP address, link type, packets received and transmitted. |

**Mode** Privileged Exec

**Example 1** To display AMF virtual links, use the command:

```
node_1# show atmf virtual-links
```

Table 51-1: Example output from **show atmf virtual-links**

```
ATMF Virtual-Link Information:

Local     Local                 Remote                Tunnel    Tunnel
Port      ID   IP               ID   IP               Protect   State
-----------------------------------------------------------------------------
vlink1    1    172.16.24.2      2    1.0.0.2          -         Complete
vlink2    2    172.16.24.2*     10   172.16.24.3*     ipsec     Complete
vlink3    3    (eth0)*          1    1.2.3.4          -         AcquireLocal

* = Dynamic Address.

Virtual Links Configured: 3
```

In the above example, a centrally located switch has the IP address space 192.0.2.x/24. It has two VLANs assigned the subnets 192.0.2.33 and 192.0.2.65 using the prefix /27. Each subnet connects to a virtual link. The first link has the IP address 192.168.1.1 and has a Local ID of 1. The second has the IP address 192.168.2.1 and has the Local ID of 2.

**Example 2** To display details about AMF virtual link with ID 1, use the command:

```
node_1# show atmf virtual-links detail id 1
```

Table 51-2: Example output from **show atmf virtual-links**

```
Virtual Link Detailed Information:

ID 1     Description          : None
ID 1     Local IP Address     : 192.168.5.1
ID 1     Remote ID            : 1
ID 1     Remote IP Address    : 192.168.5.20
ID 1     Link Type            : virtual-link
ID 1     Packets Received     : 236465
ID 1     Packets Transmitted  : 192626
```

**Example 3** To display AMF virtual links' MAC address information, use the command:

```
node_1# show atmf virtual-links macaddr
```

Table 51-3: Example output from **show atmf virtual-links macaddr**

```
ATMF Link Remote Information:

ATMF Management Bridge Information:

Bridge: br-atmfmgmt

port no mac addr                is local?       ageing timer
  1     00:00:cd:27:c2:07       yes                0.00
  2     8e:c7:ae:81:7e:68       yes                0.00
  2     00:00:cd:28:bf:e7       no                 0.01
```

Table 51-4: Parameters in the output from **show atmf virtual-links**

| Parameter | Definition |
|---|---|
| Local Port | The tunnel name e.g. vlink1, vlink2, equivalent to an L2TP tunnel. |
| Local ID | The local ID of the virtual link. This matches the vlink<number> |
| Tunnel Protect | Tunnel protection protocol. |
| Tunnel State | The operational state of the vlink (either Up or Down). This state is always displayed once a vlink has been created. |
| mac addr | AMF virtual links terminate on an internal soft bridge. The "show atmf virtual-links macaddress" command displays MAC Address information. |
| is local? | Indicates whether the MAC displayed is for a local or a remote device. |
| ageing timer | Indicates the current aging state for each MAC address. |

**Related commands** atmf virtual-link

# show atmf working-set

**Overview** This command displays the nodes that form the current AMF working-set.

**Syntax**

```
show atmf working-set
```

**Mode** Privileged Exec

**Example** To show current members of the working-set, use the command:

```
ATMF_NETWORK[6]# show atmf working-set
```

**Table 52:** Sample output from the **show atmf working-set** command.

```
ATMF Working Set Nodes:

node1, node2, node3, node4, node5, node6

Working set contains 6 nodes
```

**Related commands**

atmf working-set

show atmf

show atmf group

# show debugging atmf

**Overview** Use this command to see what debugging is turned on for AMF.

For information on filtering and saving command output, see the "Getting Started with AlliedWare Plus" Feature Overview and Configuration Guide.

**Syntax**

```
show debugging atmf
```

**Mode** Privileged Exec

**Example** To display the AMF debugging status, use the command:

```
node_1# show debugging atmf
```

Table 51-1: Sample output from the **show debugging atmf** command.

```
node_1# show debugging atmf
ATMF debugging status:
ATMF arealink debugging is on
ATMF link debugging is on
ATMF crosslink debugging is on
ATMF database debugging is on
ATMF neighbor debugging is on
ATMF packet debugging is on
ATMF error debugging is on
```

**Related commands** debug atmf packet

# show debugging atmf packet

**Overview** Use this command to see what debugging is turned on for AMF Packet debug.

For information on filtering and saving command output, see the "Getting Started with AlliedWare Plus" Feature Overview and Configuration Guide.

**Syntax**

```
show debugging atmf packet
```

**Mode** User Exec and Privileged Exec

**Example** To display the AMF packet debugging status, use the command:

```
node_1# show debug atmf packet
```

Table 51-2: Sample output from the **show debugging atmf packet** command.

```
ATMF packet debugging is on
=== ATMF Packet Debugging Parameters===
Node Name: x908
Port name: port1.1.1
Limit: 500 packets
Direction: TX
Info Level: Level 2
Packet Type Bitmap:
2. Crosslink Hello BPDU pkt with downlink domain info
3. Crosslink Hello BPDU pkt with uplink info
4. Down and up link Hello BPDU pkts
6. Stack hello unicast pkts
8. DBE request
9. DBE update
10. DBE bitmap update
```

**Related commands**

debug atmf

debug atmf packet

# show running-config atmf

**Overview** This command displays the running system information that is specific to AMF.

**Syntax**

```
show running-config atmf
```

**Mode** User Exec and Global Configuration

**Example** To display the current configuration of AMF, use the following commands:

```
node_1# show running-config atmf
```

For information on filtering and saving command output, see the "Getting Started with AlliedWare Plus" Feature Overview and Configuration Guide.

**Related commands**

show running-config

no debug all

# state

**Overview** This command sets the running state of an AMF container on a Virtual AMF Appliance (VAA).

An AMF container is an isolated instance of AlliedWare Plus with its own network interfaces, configuration, and file system. The features available inside an AMF container are a sub-set of the features available on the host VAA. These features enable the AMF container to function as a uniquely identifiable AMF master and allows for multiple tenants (up to 60) to run on a single VAA host. See the AMF Feature Overview and Configuration Guide for more information on running multiple tenants on a single VAA host.

**Syntax** `state {enable|disable}`

| Parameter | Description |
|---|---|
| `disable` | Stop the AMF container. The container's state changes to `stopped`. |
| `enable` | Start the AMF container. The container's state changes to `running`. |

**Default** By default, **state** is disabled.

**Mode** AMF Container Configuration

**Usage notes** The first time the **state enable** command is executed on a container it assigns the container to an area and configures it as an AMF master. This is achieved by automatically adding the following configuration to the AMF container:

```
atmf network-name <AMF network-name>
atmf master
atmf area <container area-name> <container area-id> local
atmf area <container area-name> password <container area-password>
atmf area <host area-name> <host area-id>

interface eth0
 atmf-arealink remote-area <host area-name> vlan 4094
```

For this reason the **state enable** command should be run after the container has been created with the atmf container command and an area-link configured with the area-link command.

Once the start-up configuration has been saved from within the AMF container, all further configuration changes need to be made manually.

**Example**

To start the AMF container "vac-wlg-1" use the commands:

```
awplus# configure terminal
awplus(config)# atmf container vac-wlg-1
awplus(config-atmf-container)# state enable
```

To stop the AMF container "vac-wlg-1" use the commands:

```
awplus# configure terminal
awplus(config)# atmf container vac-wlg-1
awplus(config-atmf-container)# state disable
```

**Related commands**

atmf container

show atmf container

**Command changes**

Version 5.4.7-0.1: command added

# switchport atmf-agentlink

**Overview**

Use this command to configure a link between this device and an x600 Series switch, in order to integrate the x600 Series switch into your AMF network. The x600 Series switch is called an "AMF agent", and the link between the x600 and this device is called an "agent link".

The x600 Series switch must be running version 5.4.2-3.16 or later.

Use the **no** variant of this command to remove the agent link. If the x600 Series switch is still connected to the switch port, it will no longer be part of the AMF network.

**Syntax**

```
switchport atmf-agentlink
no switchport atmf-agentlink
```

**Default**

By default, no agent links exist and x600 Series switches are not visible to AMF networks.

**Mode**

Interface mode for a switch port. Note that the link between the x600 and the AMF network must be a single link, not an aggregated link.

**Usage notes**

The x600 Series switch provides the following information to the AMF node that it is connected to:

- The MAC address
- The IPv4 address
- The IPv6 address
- The name/type of the device (Allied Telesis x600)
- The name of the current firmware
- The version of the current firmware
- The configuration name

AMF guestnode also makes most of this information available from x600 Series switches, but requires configuration with DHCP and/or LLDP. AMF agent is simpler; as soon the x600 is connected to an appropriately configured port of an AMF node, it is immediately integrated into the AMF network.

To see information about the x600 Series switch, use the **show atmf links guest detail** command.

**Example**

To configure port1.0.1 as an agent link, use the commands:

```
awplus# configure terminal
awplus(config)# interface port1.0.1
awplus(config-if)# switchport atmf-agentlink
```

**Related commands**

show atmf links guest

# switchport atmf-arealink

**Overview**

This command enables you to configure a port or aggregator to be an AMF area link. AMF area links are designed to operate between two nodes in different areas in an AMF network.

Use the **no** variant of this command to remove any AMF area link that may exist for the selected port or aggregated link.

This command is only available on AMF controllers and master nodes.

**Syntax**

```
switchport atmf-arealink remote-area <area-name> vlan <2-4094>
no switchport atmf-arealink
```

| Parameter | Description |
|---|---|
| *<area-name>* | The name of the remote area that the port is connecting to. |
| *<2-4094>* | The VLAN ID for the link. This VLAN cannot be used for any other purpose, and the same VLAN ID must be used at each end of the link. |

**Default**

No arealinks are configured.

**Mode**

Interface Configuration for a switchport, a static aggregator, or a dynamic channel group.

**Usage notes**

Run this command on the port or aggregator at both ends of the link.

Each area must have the area-name configured, and the same area password must exist on both ends of the link.

Running this command will automatically place the port or static aggregator into trunk mode (i.e. switchport mode trunk) and will synchronize the area information stored on the two nodes.

You can configure multiple arealinks between two area nodes, but only one arealink at any time will be in use. All other arealinks will block information, to prevent network storms.

***NOTE:*** *See the atmf-arealink command to configure an AMF area link on an AR-series Eth interface.*

**Example**

To make switchport port1.0.2 an arealink to the 'Auckland' area on VLAN 6, use the commands:

```
controller-1# configure terminal
controller-1(config)# interface port1.0.2
controller-1(config-if)# switchport atmf-arealink remote-area
Auckland vlan 6
```

To remove switchport port1.0.1 as an AMF area link, use the commands:

```
controller-1# configure terminal
controller-1(config)# interface port1.0.1
controller-1(config-if)# no switchport atmf-arealink
```

**Related commands**

atmf area

atmf area password

atmf virtual-link

show atmf links

# switchport atmf-crosslink

**Overview**

This command configures the selected port, statically aggregated link or dynamic channel group (LACP) to be an AMF crosslink. Running this command will automatically place the port or aggregator into trunk mode (i.e. **switchport mode trunk**).

The connection between two AMF masters must utilize a crosslink. Crosslinks are used to carry the AMF control information between master nodes. Multiple crosslinks can be configured between two master nodes, but only one crosslink can be active at any particular time. All other crosslinks between masters will be placed in the blocking state, in order to prevent broadcast storms.

Use the **no** variant of this command to remove any crosslink that may exist for the selected port or aggregated link.

**Syntax**

```
switchport atmf-crosslink
no switchport atmf-crosslink
```

**Mode**

Interface Configuration for a switchport, a static aggregator or a dynamic channel group.

**Usage notes**

Crosslinks can be used anywhere within an AMF network. They have the effect of separating the AMF network into separate domains.

Where this command is used, it is also good practice to use the **switchport trunk native vlan** command with the parameter **none** selected. This is to prevent a network storm on a topology of ring connected devices.

**Example 1**

To make switchport port1.0.1 an AMF crosslink, use the following commands:

```
Node_1# configure terminal
Node_1(config)# interface port1.0.1
Node_1(config-if)# switchport atmf-crosslink
```

**Example 2**

This example is shown twice. Example 2A is the most basic command sequence. Example 2B is a good practice equivalent that avoids problems such as broadcast storms that can otherwise occur.

**Example 2A**

To make static aggregator sa1 an AMF crosslink, use the following commands:

```
Node_1# configure terminal
Node_1(config)# interface sa1
Node_1(config-if)# switchport atmf-crosslink
```

**Example 2B** To make static aggregator sa1 an AMF crosslink, use the following commands for good practice:

```
Node_1# configure terminal
Node_1(config)# interface sa1
Node_1(config-if)# switchport atmf-crosslink
Node_1(config-if)# switchport trunk allowed vlan add 2
Node_1(config-if)# switchport trunk native vlan none
```

In this example VLAN 2 is assigned to the static aggregator, and the native VLAN (VLAN 1) is explicitly excluded from the aggregated ports and the crosslink assigned to it.

***NOTE:*** *The AMF management and domain VLANs are automatically added to the aggregator and the crosslink.*

**Related commands** show atmf links statistics

# switchport atmf-guestlink

**Overview** Guest links are used to provide basic AMF functionality to non AMF capable devices. Guest links can be configured for either a selected switch port or a range of switch ports and use generic protocols to collect status and configuration information that the guest devices make available.

Use the **no** variant of this command to remove the guest node functionality from the selected port or ports.

***NOTE:*** *AMF guest nodes are not supported on ports using the OpenFlow protocol.*

**Syntax**

```
switchport atmf-guestlink [class <guest-class>] [ip <A.B.C.D>|
ipv6 <X:X::X:X>]
```

```
no switchport atmf-guestlink
```

| Parameter | Description |
|---|---|
| `class` | Set a guest class |
| `<guest-class>` | The name of the guest class. |
| `ip` | Specifies that the address following will have an IPv4 format |
| `<A.B.C.D>` | The guest node's IP address in IPv4 format. |
| `ipv6` | Specifies that the address following will have an IPv6 format |
| `<X:X::X:X>` | The guest node's IP address in IPv6 format. |

**Default** No guest links are configured.

**Mode** Interface

**Example 1** To configure switchport port1.0.1 to be a guest link, that will connect to a guest node having a guest class of **camera** and an IPv4 address of **192.168.3.3**, use the following commands:

```
node1# configure terminal
node1(config)# int port1.0.1
node1(config-if)# switchport atmf-guestlink class camera ip
192.168.3.3
```

**Example 2** To configure switchport port1.0.1 to be a guest link, which will connect to a guest node having a guest class of **phone** and an IPv6 address of **2001:db8:21e:10d::5**, use the following commands:

```
node1# configure terminal
node1(config)# int port1.0.1
node1(config-if)# switchport atmf-guestlink class phone ipv6
2000:db8:21e:10d::5
```

**Example 3** To configure switchport port1.0.1 to be a guest link, using the default model type and learning method address, use the following commands:

```
node1# configure terminal
node1(config)# int port1.0.1
node1(config-if)# switchport atmf-guestlink
```

**Example 4** To configure switchports port1.0.1 to port1.0.3 to be guest links, for the guest class **camera**, use the following commands:

```
node1# configure terminal
node1(config)# int port1.0.1-port1.0.3
node1(config-if)# switchport atmf-guestlink class camera
```

**Example 5** To remove the guest-link functionality from switchport port1.0.1, use the following commands:

```
node1# configure terminal
node1(config)# int port1.0.1
node1(config-if)# no switchport atmf-guestlink
```

**Related commands**

atmf guest-class

discovery

http-enable

username

modeltype

show atmf links guest

show atmf guests

# switchport atmf-link

**Overview**

This command enables you to configure a port or aggregator to be an up/down AMF link. Running this command will automatically place the port or aggregator into trunk mode. If the port was previously configured in access mode, the configured access VLAN will be removed.

Use the **no** variant of this command to remove any AMF link that may exist for the selected port or aggregated link.

**Syntax**

```
switchport atmf-link
no switchport atmf-link
```

**Mode**

Interface Configuration for a switchport, a static aggregator or a dynamic channel group.

**Usage notes**

Up/down links and virtual links interconnect domains in a vertical hierarchy, with the highest domain being the core domain. In effect, they form a tree of interconnected AMF domains. This tree must be loop-free. Therefore you must configure your up/down and virtual links so that no loops are formed.

Within each domain, cross-links between AMF nodes define those nodes as siblings within the same domain. You can form rings by combining cross-links with up/down links and/or virtual links, as long as each AMF domain links upwards to only a single parent domain. Each domain may link downwards to multiple child domains.

***NOTE:*** *See the atmf-link command to configure an AMF up/down link on an AR-series Eth interface.*

**Example**

To configure switchport port1.0.1 as an AMF up/down link, use the commands:

```
Node_1# configure terminal
Node_1(config)# interface port1.0.1
Node_1(config-if)# switchport atmf-link
```

To remove switchport port1.0.1 as an AMF up/down link, use the commands:

```
Node_1# configure terminal
Node_1(config)# interface port1.0.1
Node_1(config-if)# no switchport atmf-link
```

**Related commands**

atmf-link

show atmf detail

show atmf links

# type atmf node

**Overview** This command configures a trigger to be activated at an AMF node join event or leave event.

**Syntax**

```
type atmf node {join|leave}
```

| Parameter | Description |
|---|---|
| join | AMF node join event. |
| leave | AMF node leave event. |

**Mode** Trigger Configuration

***CAUTION:*** *Only configure this trigger on one device because it is a network wide event.*

**Example 1** To configure trigger 5 to activate at an AMF node leave event, use the following commands. In this example the command is entered on node-1:

```
node1(config)# trigger 5
node1(config-trigger) type atmf node leave
```

**Example 2** The following commands will configure trigger 5 to activate if an AMF node join event occurs on any node within the working set:

```
node1# atmf working-set group all
```

This command returns the following display:

```
====================
node1, node2, node3:
====================

Working set join
```

Note that the running the above command changes the prompt from the name of the local node, to the name of the AMF-Network followed, in square brackets, by the number of member nodes in the working set.

```
AMF-Net[3]# conf t
AMF-Net[3](config)# trigger 5
AMF-Net[3](config-trigger)# type atmf node leave
AMF-Net[3](config-trigger)# description “E-mail on AMF Exit”
AMF-Net[3](config-trigger)# active
```

Enter the name of the script to run at the trigger event.

```
AMF-Net[3](config-trigger)# script 1 email_me.scp
AMF-Net[3](config-trigger)# end
```

Display the trigger configurations

```
AMF-Net[3]# show trigger
```

This command returns the following display:

```
=======
node1:
========

TR# Type & Details     Description          Ac Te Tr Repeat     #Scr Days/Date
--------------------------------------------------------------------------------
001 Periodic (2 min)   Periodic Status Chk  Y  N  Y Continuous  1   smtwtfs
005 ATMF node (leave)  E-mail on ATMF Exit  Y  N  Y Continuous  1   smtwtfs
--------------------------------------------------------------------------------

==============
Node2, Node3,
==============

TR# Type & Details     Description          Ac Te Tr Repeat     #Scr Days/Date
--------------------------------------------------------------------------------
005 ATMF node (leave)  E-mail on ATMF Exit  Y  N  Y Continuous  1   smtwtfs
--------------------------------------------------------------------------------
```

Display the triggers configured on each of the nodes in the AMF Network.

```
AMF-Net[3]# show running-config trigger
```

This command returns the following display:

```
========
Node1:
========

trigger 1
 type periodic 2
 script 1 atmf.scp
trigger 5
 type atmf node leave
description “E-mail on ATMF Exit”
 script 1 email_me.scp
!

============
Node2, Node3:
============

trigger 5
 type atmf node leave
description “E-mail on ATMF Exit”
 script 1 email_me.scp
!
```

**Related commands** show trigger

# undebug atmf

**Overview** This command is an alias for the **no** variant of the debug atmf command.

# username

**Overview** This command enables you to assign a **username** to a guest class. Guests may require a username and possibly also a password. In its non-encypted form the password must be between 1 and 32 characters and will allow spaces. In its encrypted form the password must be between 1 to 64 characters and will allow any character

**Syntax**

```
username <name> password [8] <userpass>
no username
```

| Parameter | Description |
|---|---|
| `username` | Indicates that a user name is to follow. |
| `<name>` | User name of the guest node. |
| `password` | Indicates that a password (or specifier) is to follow. |
| 8 | Specifier indicating that the following password is encrypted. It's primary purpose is to differentiate between the configuration input and the CLI input. You should not specify this for CLI input. |
| `<userpass>` | The password to be entered for the guest node. |

**Default** No usernames configured

**Mode** AMF Guest Configuration

**Example** To assign the user name 'reception' and the password of 'secret' to an AMF guest node that has the guest class of 'phone1' use the following commands:

```
node1# configure terminal
node1(config)# amf guest-class phone1
node1(config-atmf-guest)# username reception password secret
```

To remove a guest node username and password for the user guest class 'phone1', use the following commands:

```
node1# configure terminal
node1(config)# atmf guest-class phone1
node1(config-atmf-guest)# no username
```

**Related commands**

show atmf links detail

atmf guest-class

switchport atmf-guestlink

show atmf links guest

show atmf nodes

# 52 Autonomous Wave Control Commands

## Introduction

**Overview**

This chapter provides an alphabetical reference of commands used to configure *Autonomous Wave Control (AWC)*.

AWC is an advanced network technology that utilizes game theory to deliver significant improvements in wireless network connectivity and performance. AWC can automatically minimize coverage gaps and reduce Access Point (AP) interference and respond to network configuration changes and bandwidth demands from user devices.

You can configure AWC through the command line, or through the Device GUI.

The Auto Setup feature configures your wireless network automatically. AP configuration is created for discovered APs including their IP addresses and MAC addresses. The AP profile is created automatically by the model name. The network and security is created using defined default values.

For more information, see the Vista Manager mini User Guide.

**Command List**


- "airtime-fairness enable (wireless-ap-prof-radio)" on page 2650
- "antenna (wireless-ap-prof-radio)" on page 2652
- "ap" on page 2653
- "ap-profile (wireless)" on page 2654
- "ap-profile (wireless-ap)" on page 2655
- "authentication (wireless-sec-wep)" on page 2656
- "auto-discovery disable" on page 2657
- "band" on page 2658
- "band-steering (wireless-network)" on page 2659
- "bandwidth (wireless-ap-prof-radio)" on page 2660
- "bcast-key-refresh-interval (wireless-sec-wpa-ent)" on page 2661

- "bcast-key-refresh-interval (wireless-sec-wpa-psnl)" on page 2662
- "captive-portal" on page 2663
- "captive-portal virtual-ip" on page 2664
- "cb-channel" on page 2665
- "channels (wireless-ap-prof-radio)" on page 2666
- "channel-blanket" on page 2667
- "channel (wireless-ap-radio)" on page 2668
- "ciphers (wireless-sec-wpa-ent)" on page 2669
- "ciphers (wireless-sec-wpa-psnl)" on page 2670
- "community read-only (wireless-ap-prof-snmp)" on page 2671
- "community trap (wireless-ap-prof-snmp)" on page 2672
- "control-vlan" on page 2673
- "country-code" on page 2674
- "day (wireless-task)" on page 2675
- "debug wireless" on page 2676
- "description (wireless-ap)" on page 2678
- "description (wireless-ap-prof)" on page 2679
- "description (wireless-mac-flt)" on page 2680
- "description (wireless-network)" on page 2681
- "description (wireless-sc-prof)" on page 2682
- "description (wireless-task)" on page 2683
- "designated-ap" on page 2684
- "enable (wireless-ap-prof-snmp)" on page 2685
- "emergency-mode" on page 2686
- "enable (wireless)" on page 2687
- "enable (wireless-ap)" on page 2688
- "enable (wireless-ap-prof-radio)" on page 2689
- "enable (wireless-network-cp)" on page 2690
- "enable (wireless-sec-wep)" on page 2691
- "enable (wireless-task)" on page 2692
- "enable (wireless-wds)" on page 2693
- "external-page-url" on page 2694
- "filter-entry" on page 2695
- "force-disable (wireless-ap-radio)" on page 2697
- "hide-ssid (wireless-network)" on page 2698

- "hwtype" on page 2699
- "index" on page 2701
- "initialization-button enable" on page 2702
- "ip-address (wireless-ap)" on page 2703
- "key" on page 2704
- "key (wireless-sc-prof)" on page 2705
- "key (wireless-sec-wep)" on page 2706
- "key (wireless-sec-wpa-psnl)" on page 2708
- "led enable" on page 2709
- "length (wireless-sec-wep)" on page 2710
- "log enable destination" on page 2711
- "log interval neighbor-ap" on page 2712
- "log rotate neighbor-ap" on page 2713
- "log rotate wireless-client" on page 2714
- "log size wireless-client" on page 2715
- "login username (wireless-ap)" on page 2716
- "login-password (wireless-ap)" on page 2717
- "mac-address (wireless-ap)" on page 2718
- "mac-auth password" on page 2719
- "mac-auth radius auth group (wireless-network)" on page 2720
- "mac-auth username" on page 2721
- "management address" on page 2723
- "management-frame-protection enable (wireless-sec-wpa-ent)" on page 2724
- "management-frame-protection enable (wireless-sec-wpa-psnl)" on page 2725
- "max-clients" on page 2726
- "mode (wireless-ap-prof-radio)" on page 2727
- "mode (wireless-network-cp)" on page 2729
- "network (wireless)" on page 2731
- "ntp designated-server" on page 2732
- "ntp designated-server enable" on page 2733
- "ntp designated-server period" on page 2734
- "outdoor" on page 2735
- "page-proxy-url" on page 2736

- "peer (wireless-wds)" on page 2737
- "permit host (wireless-ap-prof-snmp)" on page 2738
- "port (wireless-ap-prof-snmp)" on page 2739
- "power (wireless-ap-radio)" on page 2740
- "pre-authentication enable (wireless-sec-wpa-ent)" on page 2741
- "radio (wireless-ap)" on page 2742
- "radio (wireless-ap-profile)" on page 2743
- "radius accounting enable" on page 2744
- "radius auth group (wireless-network-cp)" on page 2745
- "radius auth group (wireless-sec-wpa-ent)" on page 2747
- "redirect-url" on page 2748
- "rogue-ap-detection enable (wireless)" on page 2750
- "sc-profile" on page 2751
- "sc-channel" on page 2752
- "security (wireless)" on page 2753
- "security (wireless-network)" on page 2755
- "security (wireless-wds)" on page 2756
- "service wireless" on page 2757
- "session-keep" on page 2758
- "session-key-refresh-interval" on page 2759
- "show debugging wireless" on page 2760
- "show wireless" on page 2761
- "show wireless ap" on page 2762
- "show wireless ap capability" on page 2767
- "show wireless ap client" on page 2769
- "show wireless ap neighbors" on page 2770
- "show wireless ap power-channel" on page 2771
- "show wireless ap-profile" on page 2772
- "show wireless auto-config" on page 2775
- "show wireless captive-portal network walled-garden" on page 2778
- "show wireless channel-blanket ap status" on page 2779
- "show wireless channel-blanket ap-profile status" on page 2780
- "show wireless country-code" on page 2781
- "show wireless network" on page 2782
- "show wireless power-channel calculate" on page 2784

- "show wireless sc-profile" on page 2785
- "show wireless security" on page 2787
- "show wireless smart-connect ap" on page 2789
- "show wireless task" on page 2790
- "show wireless wds" on page 2793
- "show wireless wireless-mac-filter" on page 2795
- "smart-connect-profile" on page 2797
- "snmp (wireless-ap-prof)" on page 2798
- "ssid (wireless-network)" on page 2799
- "ssid (wireless-sc-prof)" on page 2800
- "station-isolation enable" on page 2801
- "station-isolation enable (wireless-ap-prof-radio)" on page 2802
- "task" on page 2803
- "time (wireless-task)" on page 2804
- "trap host (wireless-ap-prof-snmp)" on page 2805
- "type (wireless-sec-wep)" on page 2806
- "type ap-configuration apply ap" on page 2807
- "type download ap (wireless-task)" on page 2808
- "type power-channel ap all" on page 2809
- "username (wireless-ap-prof-snmp)" on page 2810
- "vap" on page 2812
- "vap network (wireless-ap-prof-radio)" on page 2814
- "version (wireless-ap-prof-snmp)" on page 2815
- "versions (wireless-sec-wpa-ent)" on page 2816
- "versions (wireless-sec-wpa-psnl)" on page 2817
- "vlan (wireless-network)" on page 2818
- "walled-garden entry" on page 2819
- "wds" on page 2821
- "wds radio (wireless-ap)" on page 2822
- "web-auth radius auth group" on page 2823
- "wireless" on page 2824
- "wireless ap-configuration apply ap" on page 2825
- "wireless auto-config" on page 2826
- "wireless download ap url" on page 2828
- "wireless emergency-mode" on page 2830

- "wireless export" on page 2831
- "wireless import" on page 2832
- "wireless power-channel ap all" on page 2833
- "wireless reset ap" on page 2834
- "wireless-mac-filter (wireless)" on page 2835
- "wireless-mac-filter (wireless-ap-prof)" on page 2836
- "wireless-mac-filter enable" on page 2838

# airtime-fairness enable (wireless-ap-prof-radio)

**Overview**

Use this command to enable **airtime-fairness** for all wireless clients regardless of speed.

Use the **no** variant of this command to disable airtime-fairness for all wireless clients.

**Syntax**

```
airtime-fairness enable
no airtime-fairness enable
```

**Default**

Disabled.

**Mode**

Wireless AP Profile Radio Configuration

**Usage notes**

Airtime-fairness ensures that every client has equal access to air time, regardless of client capability. Client capability includes the wireless standard 802.11 mode and Radio Frequency (RF) link signal strength.

If two clients were each assigned a 10 Mbps bandwidth and sending equally sized frames then they potentially could have unequal air time if their RF link characteristics were different.

RF link characteristics are based upon the distance of the client from the Access Point (AP). A client that is closer to the AP typically operates at a higher data rate than a client farther from the AP. This is because the AP and client are deliberately designed to adapt their transmission rates in order to maintain an optimal quality of the RF link.

This behavior is normal between the AP and clients since the client devices are not expected to remain at a constant or equal distance from the AP. This could mean that one device is consuming more airtime than it is entitled to, even though that device is not consuming more than its bandwidth limit.

Note: This command is valid on TQ series devices only.

**Example**

To enable airtime-fairness for ‘radio 2’ on ‘ap-profile100’ use the following commands:

```
awplus# configure terminal
awplus(config)# wireless
awplus(config-wireless)# ap-prof 100
awplus(config-wireless-ap-prof)# ap-prof 100
awplus(config-wireless-ap-prof-radio)# radio 2
awplus(config-wireless-ap-prof-radio)# airtime-fairness enable
```

**Related commands**

radio (wireless-ap-profile)

**Command changes** Version 5.4.7-2.4: command added.

# antenna (wireless-ap-prof-radio)

**Overview**

Use the antenna command to set the antenna model for a wireless Access Point (AP).

Use the **no** variant of this command to remove the designated antenna model for a wireless AP.

**Syntax**

```
antenna {an2458-10dp|an5158-16dp|an5158-19dp}
no antenna
```

| Parameter | Description |
|---|---|
| an2458-10dp | Antenna model AN2458-10DP |
| an5158-16dp | Antenna model AN5158-16DP |
| an5158-19dp | Antenna model AN5158-19DP |

**Default**

Not set.

**Mode**

Wireless AP Profile Radio Configuration

**Example**

To configure an AP radio configuration to use the antenna model AN5158-19DP, use the following commands:

```
awplus# configure terminal
awplus(config)# wireless
awplus(config-wireless)# ap-profile 100
awplus(config-wireless-ap)# hwtype tq single spec 11n
awplus(config-wireless-ap)# band 5
awplus(config-wireless-ap)# radio 1
awplus(config-wireless-ap-radio)# antenna an5158-19dp
```

**Related commands**

hwtype

band

radio (wireless-ap-profile)

**Command changes**

Version 5.4.7-2.4: command added

# ap

**Overview** Use this command to configure an Access Point (AP).

If the AP doesn't already exist, then this command creates it.

Use the **no** variant of this command to remove an AP configuration.

**Syntax** `ap <1-65535>`

| Parameter | Description |
|---|---|
| *<1-65535>* | AP configuration ID number. |

**Default** Not set.

**Mode** Wireless Configuration

**Usage notes** This command adds an AP configuration and enters the AP configuration mode.

**Example** To configure an AP with an ID of 10, use the following commands:

```
awplus# configure terminal
awplus(config)# wireless
awplus(config-wireless)# ap 10
```

**Related commands**

wireless

enable (wireless-ap)

description (wireless-ap)

ap-profile (wireless)

ip-address (wireless-ap)

mac-address (wireless-ap)

login username (wireless-ap)

login-password (wireless-ap)

wds radio (wireless-ap)

radio (wireless-ap-profile)

**Command changes** Version 5.4.7-2.4: command added.

# ap-profile (wireless)

**Overview**

Use this command to configure an AP (Access Point) profile. If the AP profile doesn't already exist, then this command creates it.

Use the **no** variant of this command to delete an AP profile.

**Syntax**

```
ap-profile <1-65535>
no ap-profile <1-65535>
```

| Parameter | Description |
|---|---|
| *<1-65535>* | The AP profile ID number. |

**Default**

Not set.

**Mode**

Wireless Configuration

**Example**

To configure an AP profile with the ID profile number of 10, use the following commands:

```
awplus# configure terminal
awplus(config)# wireless
awplus(config-wireless)# ap-profile 10
```

To remove the AP profile 10, use the following commands:

```
awplus# configure terminal
awplus(config)# wireless
awplus(config-wireless)# no ap-profile 10
```

**Related commands**

show wireless ap-profile

description (wireless-ap-prof)

hwtype

outdoor

ntp designated-server

led enable

radio (wireless-ap-profile)

show wireless ap-profile

**Command changes**

Version 5.4.7-2.4: command added

# ap-profile (wireless-ap)

**Overview**

Use this command to set an Access Point (AP) Profile to an AP.

Use the **no** variant of this command to delete an AP Profile.

**Syntax**

```
ap-profile <1-65535>
no ap-profile
```

| Parameter | Description |
|---|---|
| *<1-65535>* | AP Profile configuration ID number. |

**Default**

Not set.

**Mode**

Wireless AP Configuration

**Example**

To set AP Profile (ap-profile 100) to the AP 1configuration, use the following commands:

```
awplus# configure terminal
awplus(config)# wireless
awplus(config-wireless)# ap 1
awplus(config-wireless-ap)# ap-profile 100
```

**Related commands**

ap

ap-profile (wireless)

show wireless ap

**Command changes**

Version 5.4.7-2.4: command added.

# authentication (wireless-sec-wep)

**Overview** Use this command to enable or disable authentication on a wireless Access Point (AP).

**Syntax**

```
authentication {both|open-system|shared-key}
```

| Parameter | Description |
|---|---|
| `both` | Use both types of authentication: open-system and shared-key authentication. |
| `open-system` | No authentication. |
| `shared-key` | WEP authentication. |

**Default** Open-system.

**Mode** Wireless Security WEP Configuration

**Usage notes** For **MWS** series devices, select either the open-system or shared-key parameter. You can't select the **both** parameter.

**Example** To configure WEP as the security authentication mode for clients, use the following commands:

```
awplus# configure terminal
awplus(config)# wireless
awplus(config-wireless)# security 10 mode wep
awplus(config-wireless-sec-wep)# authentication shared-key
```

**Related commands** security (wireless)

**Command changes** Version 5.4.7-2.4: command added.

# auto-discovery disable

**Overview**

Use this command to disable the automatic search for new APs in an AWC Smart Connect (AWC-SC) network.

Use the **no** variant of this command to enable the automatic search for new APs.

**Syntax**

```
auto-discovery disable
no auto-discovery disable
```

**Default**

Enabled

**Mode**

Wireless Smart Connect Profile Configuration

**Usage notes**

Auto-discovery is a function that allows an AP that is in the factory default state to automatically become part of an AWC-SC network. This is because when a wireless AP is activated in the factory default state, its IP and MAC address are added to the AP profile and the Smart Connect profile.

**Example**

To turn auto-discovery off for Smart Connect profile 10, use the commands:

```
awplus# configure terminal
awplus(config)# wireless
awplus(config-wireless)# smart-connect-profile 10
awplus(config-wireless-sc-prof)# auto-discovery disable
```

**Related commands**

smart-connect-profile

**Command changes**

Version 5.5.0-0.1: command added

# band

**Overview** Use this command to assign a frequency band to a single antenna wireless AP.

Use the **no** variant of this command to set the band to the default value of 2.

**Syntax**

```
band {2|5}
no band
```

| Parameter | Description |
|---|---|
| 2 | 2.4GHz band |
| 5 | 5GHz band |

**Default** The default band is 2 (2.4GHz).

**Mode** Wireless AP Profile Configuration

**Usage notes** The command can only be used with single antenna APs.

**Example** To configure a 5GHz band for a single antenna AP, use the following commands:

```
awplus# configure terminal
awplus(config)# wireless
awplus(config-wireless)# ap-profile 2
awplus(config-wireless-ap-prof)# band 5
```

**Related commands**

ap-profile (wireless)

show wireless ap-profile

antenna (wireless-ap-prof-radio)

**Command changes** Version 5.4.7-2.4: command added

# band-steering (wireless-network)

**Overview**

Use this command to enable band steering on a wireless Access Point (AP).

Use the **no** variant of this command to disable band steering.

**Syntax**

```
band-steering
no band-steering
```

**Default**

Disabled.

**Mode**

Wireless Network Configuration

**Usage notes**

Band Steering detects dual-band capable clients and steers them to the 5 GHz frequency. This leaves the more crowded 2.4 GHz band available for legacy clients.

This helps improve end user experience by reducing channel utilization, especially in high density environments

This command is not supported on the **MWS** series products.

**Example**

To enable band steering, use the following commands:

```
awplus# configure terminal
awplus(config)# wireless
awplus(config-wireless)# network 20
awplus(config-wireless-network)# band-steering
```

**Related commands**

network (wireless)

show wireless network

**Command changes**

Version 5.4.7-2.4: command added.

# bandwidth (wireless-ap-prof-radio)

**Overview**

Use this command to assign a bandwidth to an Access Point (AP).

Use the **no** variant of this command to revert to the default bandwidth.

**Syntax**

```
bandwidth {20|40|80}
no bandwidth
```

| Parameter | Description |
|---|---|
| 20 | 20MHz bandwidth |
| 40 | 40MHz bandwidth |
| 80 | 80MHz bandwidth |

**Default**

The default bandwidth value varies according to the configured hardware and radio type.

**Mode**

Wireless AP Profile Radio Configuration

**Example**

To assign a 40MHz bandwidth to AP-profile 100 for Radio 2, use the following commands:

```
awplus# configure terminal
awplus(config)# wireless
awplus(config-wireless)# ap-profile 100
awplus(config-wireless-ap-prof)# radio 2
awplus(config-wireless-ap-prof-radio)# bandwidth 40
```

**Related commands**

ap-profile (wireless)

country-code

hwtype

outdoor

radio (wireless-ap-profile)

**Command changes**

Version 5.4.7-2.4: command added.

# bcast-key-refresh-interval (wireless-sec-wpa-ent)

**Overview**

Use this command to set the refresh interval for the broadcast key used in a WPA-enterprise security configuration.

Use the **no** variant of this command to set the refresh interval for the broadcast key to the default.

**Syntax**

```
bcast-key-refresh-interval <0-86400>
no bcast-key-refresh-interval
```

| Parameter | Description |
|---|---|
| *<0-86400>* | The refresh interval in seconds<br>For the **MWS series**, the broadcast key refresh rate is *<0, 30-3600>* seconds. |

**Default**

The default refresh interval is 0 seconds.

**Mode**

Wireless Security WPA-enterprise Configuration

**Example**

To set 3600 seconds as the broadcast key refresh interval, use the following commands:

```
awplus# configure terminal
awplus(config)# wireless
awplus(config-wireless)# security 210 mode wpa-enterprise
awplus(config-wireless-sec-wpa-ent)#
bcast-key-refresh-interval 3600
```

**Related commands**

security (wireless)

**Command changes**

Version 5.4.7-2.4: command added

# bcast-key-refresh-interval (wireless-sec-wpa-psnl)

**Overview**

Use this command to set the refresh interval for a broadcast (group) key used in a WPA-personal security configuration.

Use the **no** variant of this command to set the refresh interval to the default value.

**Syntax**

```
bcast-key-refresh-interval <0-86400>
no bcast-key-refresh-interval
```

| Parameter | Description |
|---|---|
| *<0-86400>* | The broadcast key refresh interval.<br>For the **MWS series**, the broadcast key refresh rate is *<0, 30-3600>* seconds. |

**Default**

The default value is 0.

**Mode**

Wireless Security WPA-personal Configuration

**Example**

To set the broadcast key refresh interval to 3600 seconds on a WPA-personal security configuration, use the following commands:

```
awplus# configure terminal
awplus(config)# wireless
awplus(config-wireless)# security 110 mode wpa-personal
awplus(config-wireless-sec-wpa-psnl)#
bcast-key-refresh-interval 3600
```

**Related commands**

security (wireless)

**Command changes**

Version 5.4.7-2.4: command added.

# captive-portal

**Overview**

Use this command to add a Captive Portal (web authentication) configuration and enter the Captive Portal configuration mode.

Captive Portal lets wireless clients authenticate themselves or agree to terms and conditions before you grant them Wi-Fi access or external web access.

This setting is only valid for AT-TQ series wireless access points.

Use the **no** variant of this command to remove a Captive Portal configuration.

**Syntax**

```
captive-portal
no captive-portal
```

**Default**

Captive Portal is not set.

**Mode**

Wireless Network Configuration

**Example**

To enter the Captive Portal configuration mode of network 20, use the commands:

```
awplus# configure terminal
awplus(config)# wireless
awplus(config-wireless)# network 20
awplus(config-wireless-network)# captive-portal
```

To reset all the Captive Portal configuration settings of network 20, use the commands:

```
awplus# configure terminal
awplus(config)# wireless
awplus(config-wireless)# network 20
awplus(config-wireless-network)# no captive-portal
```

**Related commands**

enable (wireless-network-cp)

page-proxy-url

radius auth group (wireless-network-cp)

redirect-url

session-keep

mode (wireless-network-cp)

**Command changes**

Version 5.4.9-1.1: command added

# captive-portal virtual-ip

**Overview**

Use this command to configure the virtual IP address on Captive Portal.

Captive Portal lets wireless clients authenticate themselves or agree to terms and conditions before you grant them Wi-Fi access or external web access.

Use the **no** variant of this command to remove the virtual IP address on Captive Portal.

**Syntax**

```
captive-portal virtual-ip <ip-address>
no captive-portal virtual-ip
```

| Parameter | Description |
|---|---|
| *<ip-address>* | The IPv4 address uses the format A.B.C.D |

**Default**

Not set.

**Mode**

Wireless AP Profile Configuration

**Usage notes**

Captive Portal uses the AP's management IP address to show an authentication page. To avoid a potential security risk, this command allows you to hide the AP management IP address by providing a virtual IP address for Captive Portal authentication.

**Example**

To configure a virtual IP address for Captive Portal, use the commands:

```
awplus# configure terminal
awplus(config)# wireless
awplus(config-wireless)# ap-profile 5
awplus(config-wireless-ap-prof)# captive-portal virtual-ip
1.1.1.1
```

**Related commands**

show wireless ap-profile

captive-portal

page-proxy-url

radius auth group (wireless-network-cp)

redirect-url

session-keep

mode (wireless-network-cp)

**Command changes**

Version 5.5.0-1.3: command added

# cb-channel

**Overview** Use this command to designate the fixed channel for channel blanket used by each of the radios in an AP profile.

Use the **no** variant of this command to revert to the default channel setting.

**Syntax**

```
cb-channel radio <1-3> channel <channel-number>
no cb-channel radio <1-3>
```

| Parameter | Description |
|---|---|
| *<1-3>* | Select the radio interface number to be a fixed channel. |
| *<channel-number>* | Fixed channel number. Select the channel from the eligible channels listed in the AP profile. |

**Default** Not set. When the parameter is blank, an eligible channel is configured. automatically.

**Mode** Wireless AP Profile Channel Blanket Configuration

**Example** To configure cb-channel 10 to radio1 and cb-channel 40 to radio2 on AP profile 100, use the following commands:

```
awplus# configure terminal
awplus(config)# wireless
awplus(config-wireless)# ap-profile 100
awplus(config-wireless-ap-prof)# channel-blanket
awplus(config-wireless-ap-prof)# cb-channel radio 1 channel 10
awplus(config-wireless-ap-prof)# cb-channel radio 2 channel 40
```

**Related commands** show wireless ap-profile

channel-blanket

**Command changes** Version 5.4.9-1.1: command added

# channels (wireless-ap-prof-radio)

**Overview**

Use this command to set the channel that a wireless Access Point (AP) uses when it is set to auto.

Use the **no** variant of this command to return the AP channel to its default.

**Syntax**

```
channels <1-255>
no channels
```

| Parameter | Description |
|---|---|
| *<1-255>* | The channel number. |

**Default**

The default channel varies with each type of AP, its country-code, and outdoor settings.

**Mode**

Wireless AP Profile Radio Configuration

**Example**

To set the wireless AP radio channel, use the following commands:

```
awplus# configure terminal
awplus(config)# wireless
awplus(config-wireless)# ap-profile 100
awplus(config-wireless-ap-prof)# radio 1
awplus(config-wireless-ap-prof-radio)# channels 10
```

**Related commands**

radio (wireless-ap-profile)

hwtype

outdoor

country-code

**Command changes**

Version 5.4.7-2.4: command added.

# channel-blanket

**Overview**

Use this command to enter the wireless-AP-profile-channel-blanket configuration mode. Once in this mode, you can modify the channel blanket configuration parameters for a wireless AP profile. A wireless AP profile defines the radio settings, such as band and channel selection and the control VLAN. The AP profile names the SSIDs to which it applies.

***NOTE:*** *The channel-blanket setting can only be used with AT-TQ5403 and AT-TQ5403e APs. If this is set for other APs, you will not be able to manage those APs.*

Use the **no** variant of this command to reset all parameters for channel blanket to default.

**Syntax**

```
channel-blanket
no channel-blanket
```

**Default**

Not set

**Mode**

Wireless AP Profile Configuration

**Usage notes**

When the command is entered, if the "key" parameter is empty, the automatically generated value is set.

**Example**

To enter the channel blanket configuration mode for AP profile 2, enter the commands:

```
awplus# configure terminal
awplus(config)# wireless
awplus(config-wireless)# ap profile 2
awplus(config-wireless-ap-prof)# channel-blanket
awplus(config-wireless-ap-prof-cb)#
```

To reset all the channel blanket parameters of AP profile 2, enter the commands:

```
awplus# configure terminal
awplus(config)# wireless
awplus(config-wireless)# ap profile 2
awplus(config-wireless-ap-prof)# no channel-blanket
```

**Related commands**

show wireless ap-profile

vap

**Command changes**

Version 5.4.9-1.1: command added

# channel (wireless-ap-radio)

**Overview**

Use this command to configure a channel on an Access Point (AP). You can configure an AP to automatically select a channel or use a fixed channel.

Use the **no** variant of this command to remove any configured channels and return to the default value.

**Syntax**

```
channel {auto|<1-255>}
no channel
```

| Parameter | Description |
|---|---|
| `auto` | The channel is automatically selected. |
| *<1-255>* | A list of fixed channels. The list is determined by the country-code. |

**Default**

The default is **auto**.

**Mode**

Wireless AP Radio Configuration

**Example**

To configure a fixed channel for an AP, use the following commands:

```
awplus# configure terminal
awplus(config)# wireless
awplus(config-wireless)# ap 100
awplus(config-wireless-ap)# radio 2
awplus(config-wireless-ap-radio)# channel 1
```

**Related commands**

ap-profile (wireless)

show wireless ap-profile

country-code

hwtype

outdoor

**Command changes**

Version 5.4.7-2.4: command added.

# ciphers (wireless-sec-wpa-ent)

**Overview**

Use this command to set the cipher suite(s) used by WPA-personal security configurations.The cipher suites available are: CCMP (AES) and TKIP.

Use the **no** variant of this command to set the default cipher suite used by WPA-personal security configurations.

**Syntax**

```
ciphers <cipher-list>
no ciphers
```

| Parameter | Description |
|---|---|
| *<cipher-list>* | The available cipher suite(s) in list format. The list can contain either **ccmp** or **tkip** or both and can be in any order. |

**Default**

CCMP.

**Mode**

Wireless Security WPA-enterprise Configuration

**Usage notes**

For **MWS** series devices, a combination of versions and ciphers are supported as follows:

- versions wpa2 and ciphers ccmp
- versions wpa, wpa2, and ciphers tkip and ccmp

**Example**

To set both CCMP (AES) and TKIP as cipher suites on a security WPA-enterprise configuration, use the following commands:

```
awplus# configure terminal
awplus(config)# wireless
awplus(config-wireless)# security 210 mode wpa-enterprise
awplus(config-wireless-sec-wpa-ent)# ciphers ccma tkip
```

**Related commands**

security (wireless)

**Command changes**

Version 5.4.7-2.4: command added

# ciphers (wireless-sec-wpa-psnl)

**Overview**

Use this command to set the cipher suite(s) used by WPA-personal security configurations.The cipher suites available are: CCMP (AES) and TKIP.

Use the **no** variant of this command to set the default cipher suite used by WPA-personal security configurations.

**Syntax**

```
ciphers <cipher-list>
no ciphers
```

| Parameter | Description |
|---|---|
| *<cipher-list>* | The available cipher suite(s) in list format. The list can contain either **ccmp** or **tkip** or both and can be in any order. |

**Default**

ccmp.

**Mode**

Wireless Security WPA-personal Configuration

**Usage notes**

For MWS series devices, a combination of versions and ciphers are supported as follows:

- versions wpa2 and ciphers ccmp
- versions wpa, wpa2, and ciphers tkip and ccmp

**Example**

To configure WPA-personal to use both CCMP (AES) and TKIP as cipher suites in a security configuration, use the following commands:

```
awplus# configure terminal
awplus(config)# wireless
awplus(config-wireless)# security 110 mode wpa-personal
awplus(config-wireless-sec-wpa-psnl)# ciphers ccmp tkip
```

**Related commands**

security (wireless)

**Command changes**

Version 5.4.7-2.4: command added.

# community read-only (wireless-ap-prof-snmp)

**Overview**

Use this command to set an SNMP read-only community name for the target AP profile. This command is valid for SNMP v1 and v2c only.

Use the **no** variant of this command to set the SNMP read-only community name back to the default (public).

**Syntax**

```
community read-only <community-name>
no community read-only
```

| Parameter | Description |
|---|---|
| *<community-name>* | This is the community name to set. It can use the following symbols in addition to single-byte alphanumeric characters (", ', \, &, <, >). |

**Default**

public

**Mode**

Wireless AP Profile SNMP Configuration

**Example**

To set the SNMP read-only community name to 'private', use the commands:

```
awplus# configure terminal
awplus(config)# wireless
awplus(config-wireless)# ap-profile 2
awplus(config-wireless-ap-prof)# snmp
awplus(config-wireless-ap-prof-snmp)# community read-only
private
```

To set the SNMP trap community name back to the default (public), use the commands:

```
awplus# configure terminal
awplus(config)# wireless
awplus(config-wireless)# ap-profile 2
awplus(config-wireless-ap-prof)# snmp
awplus(config-wireless-ap-prof-snmp)# no community read-only
```

**Related commands**

show wireless ap-profile

snmp (wireless-ap-prof)

version (wireless-ap-prof-snmp)

**Command changes**

Version 5.5.0-2.1: command added

# community trap (wireless-ap-prof-snmp)

**Overview**

Use this command to set an SNMP trap community name for the target AP profile. This command is valid for SNMP v1 and v2c only.

Use the **no** variant of this command to set the SNMP trap community name to the default (public).

**Syntax**

```
community trap <community-name>
no community trap
```

| Parameter | Description |
|---|---|
| *<community-name>* | This is the community name to set. It can use the following symbols in addition to single-byte alphanumeric characters (", ', \, &, <, >). |

**Default**

public

**Mode**

Wireless AP Profile SNMP Configuration

**Example**

To set the SNMP trap community name to 'private', use the commands:

```
awplus# configure terminal
awplus(config)# wireless
awplus(config-wireless)# ap-profile 2
awplus(config-wireless-ap-prof)# snmp
awplus(config-wireless-ap-prof-snmp)# community trap private
```

To set the SNMP trap community name back to the default (public), use the commands:

```
awplus# configure terminal
awplus(config)# wireless
awplus(config-wireless)# ap-profile 2
awplus(config-wireless-ap-prof)# snmp
awplus(config-wireless-ap-prof-snmp)# no community trap
```

**Related commands**

show wireless ap-profile

snmp (wireless-ap-prof)

version (wireless-ap-prof-snmp)

**Command changes**

Version 5.5.0-2.1: command added

# control-vlan

**Overview** Use this command to create a control VLAN ID for a wireless AP belonging to channel blanket.

Use the **no** variant of this command to clear an AP's designated channel blanket VLAN ID.

**Syntax**

```
control-vlan <vlan-id>
no control-vlan
```

| Parameter | Description |
|---|---|
| *<vlan-id>* | The designated VLAN ID <1-4094> used on a wireless AP belonging to channel blanket. |

**Default** Not set

**Mode** Wireless AP Profile Channel Blanket Configuration

**Example** To set the channel blanket control VLAN for AP profile 100, use the following commands:

```
awplus# configure terminal
awplus(config)# wireless
awplus(config-wireless)# ap-profile 100
awplus(config-wireless-ap-prof)# channel-blanket
awplus(config-wireless-ap-prof-cb)# control-vlan 10
```

**Related commands**

ap-profile (wireless-ap)

show wireless ap-profile

channel-blanket

**Command changes** Version 5.4.9-1.1: command added

# country-code

**Overview**

Use this command to set the country code for an AP-profile.

Use the **no** variant of this command to revert back to the default country code for the device's region.

**Syntax**

```
country code <code>
no country code
```

| Parameter | Description |
|---|---|
| *<code>* | A two letter code representing the country. Use the command show wireless country-code to see the full list of country codes available. |

**Default**

The default country code is '**jp**' for Japan or '**us**' for other regions.

**Mode**

Wireless AP Profile Configuration

**Usage notes**

To display a list of the country codes that can be applied, use the command **show wireless country-code**

Note, applying a new country code will reset the following configuration for the **ap-profile** and **ap-radio** modes:

- mode, bandwidth, and channel

**Example**

To set the country code to 'New Zealand' for AP-profile 10, use the following commands:

```
awplus# configure terminal
awplus(config)# wireless
awplus(config-wireless)# ap-profile 10
awplus(config-wireless-ap-prof)# country-code nz
```

**Related commands**

show wireless country-code

show wireless ap-profile

channel (wireless-ap-radio)

mode (wireless-ap-prof-radio)

bandwidth (wireless-ap-prof-radio)

**Command changes**

Version 5.4.7-2.4: command added

# day (wireless-task)

**Overview**

Use this command to set a day or range of days to run a task.

You can use the **time** command along with the **day** command to more fully set the task run time configuration.

Use the **no** variant of this command to remove the day set to run a task.

**Syntax**

```
day {<day> <month> <year>|<daysofweek>|every-day}
no day
```

| Parameter | Description |
|---|---|
| *<day>* | The day set for the task. Select a number from1-31. |
| *<month>* | The month to run the task. Enter the first three letters of the month, for example Jan, Feb, Mar... |
| *<year>* | The year to run the task. Select a year between <2000-2035>. |
| *<daysofweek>* | The day or days of the week to run the task. (sunday\|monday\|tuesday\|wednesday\|thursday\|friday\|saturday) |
| `every-day` | Set the task to run on every day of the week. |

**Default**

Not set.

**Mode**

Wireless Task Configuration

**Example**

To configure task 5 to run on the 22nd of September 2017, use the following commands:

```
awplus# configure terminal
awplus(config)# wireless
awplus(config-wireless)# task 5
awplus(config-wireless-task)# day 22 Sep 2017
```

**Related commands**

task

show wireless task

time (wireless-task)

**Command changes**

Version 5.4.7-2.4: command added.

# debug wireless

**Overview** Use this command to enable wireless debugging. Debugging filters can be based on severity level and module name.

Use the **no** variant of this command to disable all wireless debugging.

**Syntax**

```
debug wireless level
{all|debug|dump|error|info|notice|trace|warning}
```

```
debug wireless module
{all|apca|apmgr|apreq|clnmgr|cwmcore|rogue|syncscan}
```

```
no debug wireless
```

| Parameter | Description | |
|---|---|---|
| `level` | Filters logging events by severity level and displays the output by one of the following configured options: | |
| | `all` | All level events |
| | `debug` | Debug events |
| | `dump` | Dump events |
| | `error` | Error conditions |
| | `info` | Information messages |
| | `notice` | Normal, but significant conditions |
| | `trace` | Trace events |
| | `warning` | Warning conditions |
| `module` | Filters logging events by module name and displays the output by one of the following configured options: | |
| | `all` | All module events |
| | `apca` | Auto power/channel assignment events |
| | `apmgr` | AP manager events |
| | `apreq` | HTTP AP request events |
| | `clnmgr` | Client manager events |
| | `cwmcore` | CWM core events |
| | `rogue` | Rogue events |
| | `syncscan` | Sync scan events |

**Default** Disabled

**Mode** User Exec

**Example**

To enable debugging of wireless with 'info' level on the 'apca' module, use the command:

```
awplus# debug wireless level info module apca
```

To disable debugging of wireless, use the command:

```
awplus# no debug wireless
```

**Related commands**

show debugging wireless

**Command changes**

Version 5.5.0-0.1: command added

# description (wireless-ap)

**Overview**

Use this command to specify a description to identify an Access Point (AP).

Use the **no** variant of this command to remove the description of a selected AP.

**Syntax**

```
description <description>
no description
```

| Parameter | Description |
|---|---|
| *<description>* | Text to describe a specific AP. |

**Default**

Not set.

**Mode**

Wireless AP Configuration

**Example**

To specify a description for an AP, use the following commands:

```
awplus# configure terminal
awplus(config)# wireless
awplus(config-wireless)# ap 10
awplus(config-wireless-ap)# description AP10_MEETING_SPACE
```

**Related commands**

ap

show wireless ap

**Command changes**

Version 5.4.7-2.4: command added.

# description (wireless-ap-prof)

**Overview**

Use this command to configure an AP-profile description. You must be in the **config-wireless-ap-prof** mode to use this command.

Use the **no** variant of this command to remove an AP-profile description.

**Syntax**

```
description <description>
no description
```

**Default**

Not set.

**Mode**

Wireless AP Profile Configuration

**Example**

To configure the description "PROF10" for an AP-profile, use the following commands:

```
awplus# configure terminal
awplus(config)# wireless
awplus(config-wireless)# ap-profile 10
awplus(config-wireless-ap-prof)# description PROF10
```

**Related commands**

ap-profile (wireless)

show wireless ap-profile

**Command changes**

Version 5.4.7-2.4: command added

# description (wireless-mac-flt)

**Overview**

Use this command to set the description of a wireless MAC filter.

Use the **no** variant of this command to remove the description.

**Syntax**

```
description <description>
no description
```

| Parameter | Description |
|---|---|
| *<description>* | Text describing the wireless MAC filter. |

**Default**

No description set by default.

**Mode**

Wireless MAC Filter Configuration

**Example**

To set the description of MAC filter '20' to 'mywhitelist', use the following commands:

```
awplus# configure terminal
awplus(config)# wireless
awplus(config-wireless)# wireless-mac-filter 20
awplus(config-wireless-mac-flt)# description mywhitelist
```

To remove the description from MAC filter '20', use the following commands:

```
awplus# configure terminal
awplus(config)# wireless
awplus(config-wireless)# wireless-mac-filter 20
awplus(config-wireless-mac-flt)# no description
```

**Related commands**

filter-entry

show wireless ap-profile

show wireless wireless-mac-filter

wireless export

wireless import

wireless-mac-filter (wireless)

wireless-mac-filter (wireless-ap-prof)

wireless-mac-filter enable

**Command changes**

Version 5.4.8-2.1: command added

# description (wireless-network)

**Overview** Use this command to set a description for the wireless network.

Use the **no** variant of this command to remove a description for a wireless network.

**Syntax**

```
description <description>
no description
```

| Parameter | Description |
|---|---|
| *<description>* | Set a description for a wireless network. |

**Default** Not set.

**Mode** Wireless Network Configuration

**Example** To set the description for a wireless network, use the following commands:

```
awplus# configure terminal
awplus(config)# wireless
awplus(config-wireless)# network 20
awplus(config-wireless-network)# description GUEST_NETWORK
```

**Related commands** network (wireless)

show wireless network

**Command changes** Version 5.4.7-2.4: command added.

# description (wireless-sc-prof)

**Overview** Use this command to configure a descriptive name for a Smart Connect profile.

Use the **no** variant of this command to remove a Smart Connect profile name.

**Syntax**

```
description <sc-profile-name>
no description
```

| Parameter | Description |
|---|---|
| *<sc-profile-name>* | The descriptive name given to a Smart Connect profile. |

**Default** Not set

**Mode** Wireless Smart Connect Profile Configuration

**Example** To set the descriptive name of SC-PROF10 for Smart Connect profile 10, use the commands:

```
awplus# configure terminal
awplus(config)# wireless
awplus(config-wireless)# smart-connect-profile 10
awplus(config-wireless-sc-prof)# description SC-PROF10
```

**Related commands**

smart-connect-profile

show wireless ap-profile

**Command changes** Version 5.5.0-0.1: command added

# description (wireless-task)

**Overview**

Use this command to set a description for a wireless task configuration.

Use the **no** variant of this command to remove a description for a wireless task configuration.

**Syntax**

```
description <description>
no description
```

| Parameter | Description |
|---|---|
| *<description>* | The description for a wireless task configuration. |

**Default**

Not set.

**Mode**

Wireless Task Configuration

**Example**

To set a description for the wireless task 5 configuration, use the following commands:

```
awplus# configure terminal
awplus(config)# wireless
awplus(config-wireless)# task 5
awplus(config-wireless-task)# description PERIODIC_AWC_CALC
```

**Related commands**

task

show wireless task

**Command changes**

Version 5.4.7-2.4: command added.

# designated-ap

**Overview**

Use this command to designate an AP to determine the BSSID (or name) of a channel blanket profile.

BSSIDs are used to describe sections of a wireless local area network. It recognizes the AP because it has a unique physical MAC address, which creates the wireless network.

This command configures the BSSID of the designated AP to be used as the BSSID of the channel blanket.

Use the **no** variant of this command to remove a designated AP.

**Syntax**

```
designated-ap <1-65535>
no designated-ap
```

| Parameter | Description |
|---|---|
| *<1-65535>* | The ID of the designated AP. |

**Default**

Not set.

**Mode**

Wireless AP Profile Channel Blanket Configuration

**Usage notes**

If you do not designate an AP, the AP with the lowest ID is assigned automatically.

**Example**

To designate AP 1001 on AP profile 100, use the following commands:

```
awplus# configure terminal
awplus(config)# wireless
awplus(config-wireless)# ap-profile 100
awplus(config-wireless-ap-prof)# channel-blanket
awplus(config-wireless-ap-prof-cb)# designated-ap 1001
```

**Related commands**

ap-profile (wireless-ap)

channel-blanket

radio (wireless-ap)

**Command changes**

Version 5.4.9-1.1: command added

# enable (wireless-ap-prof-snmp)

**Overview**

Use this command to enable an SNMP configuration for the target AP profile.

Use the **no** variant of this command to disable the SNMP configuration for the target AP profile.

**Syntax**

```
enable
no enable
```

**Default**

Disabled

**Mode**

Wireless AP Profile SNMP Configuration

**Example**

To enable SNMP, use the commands:

```
awplus# configure terminal
awplus(config)# wireless
awplus(config-wireless)# ap-profile 2
awplus(config-wireless-ap-prof)# snmp
awplus(config-wireless-ap-prof-snmp)# enable
```

To disable SNMP, use the commands:

```
awplus# configure terminal
awplus(config)# wireless
awplus(config-wireless)# ap-profile 2
awplus(config-wireless-ap-prof)# snmp
awplus(config-wireless-ap-prof-snmp)# no enable
```

**Related commands**

community read-only (wireless-ap-prof-snmp)

community trap (wireless-ap-prof-snmp)

permit host (wireless-ap-prof-snmp)

username (wireless-ap-prof-snmp)

show wireless ap-profile

snmp (wireless-ap-prof)

version (wireless-ap-prof-snmp)

**Command changes**

Version 5.5.0-2.1: command added

# emergency-mode

**Overview**

Use this command to set emergency mode on a wireless network. Wireless networks in emergency mode are only active when AWC is also in emergency mode. You can use emergency mode to prevent people from being isolated from infrastructure in the event of a natural disaster such as an earthquake or typhoon.

Use the **no** variant of this command to remove the emergency mode from a wireless network.

**Syntax**

```
emergency-mode
no emergency-mode
```

**Default**

Disabled.

**Mode**

Wireless Network Configuration

**Example**

To configure an emergency mode for network 5, use the commands:

```
awplus# configure terminal
awplus(config)# wireless
awplus(config-wireless)# network 5
awplus(config-wireless-network)# emergency-mode
```

**Related commands**

show wireless network

wireless emergency-mode

**Command changes**

Version 5.5.0-0.3: command added

# enable (wireless)

**Overview**

Use this command to enable Access Point (AP) management by Autonomous Wave Control (AWC).

Use the **no** variant of this command to disable AP management by AWC.

**Syntax**

```
enable
no enable
```

**Default**

Disabled.

**Mode**

Wireless Configuration

**Usage notes**

You must use the **enable** command before you configure a management address.

**Example**

To configure AP management by AWC, using an interface with the IP address 192.168.0.1, use the following commands:

```
awplus# configure terminal
awplus(config)# wireless
awplus(config-wireless)# enable
awplus(config-wireless)# management address 192.168.0.1
```

**Related commands**

management address

show wireless

**Command changes**

Version 5.4.7-2.4: command added.

# enable (wireless-ap)

**Overview**

Use this command to enable a wireless Access Point (AP) configuration.

Use the **no** variant of this command to disable wireless AP configuration.

**Syntax**

```
enable
no enable
```

**Default**

Disabled.

**Mode**

Wireless AP Configuration

**Example**

To enable the configuration for AP 100, use the following commands:

```
awplus# configure terminal
awplus(config)# wireless
awplus(config-wireless)#ap 100
awplus(config-wireless-ap)#enable
```

**Related commands**

ap

show wireless ap

**Command changes**

Version 5.4.7-2.4: command added.

# enable (wireless-ap-prof-radio)

**Overview**

Use this command to enable a wireless Access Point (AP) profile radio configuration.

Use the **no** variant of this command to disable a wireless AP profile radio configuration.

**Syntax**

```
enable
no enable
```

**Default**

Disabled.

**Mode**

Wireless AP Profile Radio Configuration

**Example**

To enable an AP radio profile configuration, use the following commands:

```
awplus# configure terminal
awplus(config)# wireless
awplus(config-wireless)# ap-profile 100
awplus(config-wireless-ap-prof)# radio 1
awplus(config-wireless-ap-prof-radio)# enable
```

**Related commands**

radio (wireless-ap-profile)

**Command changes**

Version 5.4.7-2.4: command added

# enable (wireless-network-cp)

**Overview**

Use this command to enable Captive Portal (web authentication) configuration on the target network.

Use the **no** variant of this command to disable Captive Portal configuration on the target network.

**Syntax**

```
enable
no enable
```

**Default**

Disabled

**Mode**

Wireless Network Configuration

**Example**

To enable Captive Portal, use the commands:

```
awplus# configure terminal
awplus(config)# wireless
awplus(config-wireless)# network 20
awplus(config-wireless-network)# captive-portal
awplus(config-wireless-network-cp)# enable
```

**Related commands**

captive-portal

enable (wireless-network-cp)

page-proxy-url

radius auth group (wireless-network-cp)

redirect-url

session-keep

mode (wireless-network-cp)

**Command changes**

Version 5.4.9-1.1: command added

# enable (wireless-sec-wep)

**Overview**

Use this command to enable a wireless WEP security configuration.

Use the **no** variant of this command to disable a wireless WEP security configuration.

**Syntax**

```
enable
no enable
```

**Default**

Disabled.

**Mode**

Wireless Security WEP Configuration

**Example**

To enable a wireless security WEP configuration, use the following commands:

```
awplus# configure terminal
awplus(config)# wireless
awplus(config-wireless)# network 10 mode wep
awplus(config-wireless-sec-wep)# enable
```

**Related commands**

security (wireless)

**Command changes**

Version 5.4.7-2.4: command added.

# enable (wireless-task)

**Overview**

Use this command to enable a wireless task configuration.

Use the **no** variant of this command to disable a wireless task configuration.

**Syntax**

```
enable
no enable
```

**Default**

Not set.

**Mode**

Wireless Task Configuration

**Example**

To enable the wireless task 5 configuration, use the following commands:

```
awplus# configure terminal
awplus(config)# wireless
awplus(config-wireless)# task 5
awplus(config-wireless-task)# enable
```

**Related commands**

task

show wireless task

**Command changes**

Version 5.4.7-2.4: command added.

# enable (wireless-wds)

**Overview**

Use this command to enable a wireless WDS security configuration.

Use the **no** variant of this command to disable a wireless WDS security configuration.

**Syntax**

```
enable
no enable
```

**Default**

Not set.

**Mode**

Wireless WDS Configuration

**Example**

To enable a wireless WDS configuration, use the following commands:

```
awplus# configure terminal
awplus(config)# wireless
awplus(config-wireless)# wds 10
awplus(config-wireless-wds)# enable
```

**Related commands**

wds

show wireless wds

**Command changes**

Version 5.4.7-2.4 command added.

# external-page-url

**Overview**

Use this command to configure the external URL authentication page for Captive Portal.

To use this command, you must first specify external-page-redirect using the **mode** command.

Use the **no** variant of this command to reset the external authentication page URL.

**Syntax**

```
external-page-url <URL>
no external-page-url
```

| Parameter | Description |
|---|---|
| *<URL>* | URL of the external authentication page |

**Default**

Disabled

**Mode**

Wireless Network Captive Portal Configuration

**Example**

To enable and set URL string 'http://www.example.com' for a Captive Portal external web authentication server on network 20, use the commands:

```
awplus# configure terminal
awplus(config)# wireless
awplus(config-wireless)# network 20
awplus(config-wireless-network)# captive-portal
awplus(config-wireless-network-cp)# external-page-url
http://www.example.com
```

**Related commands**

captive-portal virtual-ip

mode (wireless-network-cp)

radius auth group (wireless-network-cp)

show wireless network

**Command changes**

Version 5.5.0-1.3: command added

# filter-entry

**Overview** Use this command to add a filter entry to a wireless MAC filter. You can optionally include a description for the filter.

Use the **no** variant of this command to remove an entry from the MAC filter list.

**Syntax**

```
filter-entry <mac-address> [description <description>]
no filter-entry <mac-address>
```

| Parameter | Description |
|---|---|
| *<mac-address>* | MAC address of the filter entry in hexadecimal format HHHH.HHHH.HHHH.<br>The maximum number of MAC addresses that can be entered per MAC filter is 2048. |
| `description` | Set an optional description for the filter entry. |
| *<description>* | Text describing the filter entry. |

**Default** No filter entries exist

**Mode** Wireless MAC Filter Configuration

**Example** To add a filter entry to MAC filter '20', use the commands:

```
awplus# configure terminal
awplus(config)# wireless
awplus(config-wireless)# wireless-mac-filter 20
awplus(config-wireless-mac-flt)# filter-entry
0000.cd28.0880.1234 description PC01
```

To remove a filter entry from MAC filter '20', use the commands:

```
awplus# configure terminal
awplus(config)# wireless
awplus(config-wireless)# wireless-mac-filter 20
awplus(config-wireless-mac-flt)# no filter-entry
0000.cd28.0880.1234
```

**Related commands**

description (wireless-mac-flt)

show wireless ap-profile

show wireless wireless-mac-filter

wireless export

wireless import

wireless-mac-filter (wireless)

wireless-mac-filter (wireless-ap-prof)

wireless-mac-filter enable

**Command changes**

Version 5.4.8-2.1: command added

# force-disable (wireless-ap-radio)

**Overview**

Use this command to override and force the disabling of an Access Point (AP) radio status.

Use the **no** variant of this command to stop overrides of an AP radio status.

**Syntax**

```
force-disable
no force-disable
```

**Default**

**no force-disable** (do not override the AP profile radio status).

**Mode**

Wireless AP Radio Configuration

**Example**

To force a disable of an AP radio status, use the following commands:

```
awplus# configure terminal
awplus(config)# wireless
awplus(config-wireless)# ap 100
awplus(config-wireless-ap)# radio 2
awplus(config-wireless-ap-radio)# force-disable
```

**Related commands**

show wireless ap-profile

radio (wireless-ap-profile)

**Command changes**

Version 5.4.7-2.4: command added

# hide-ssid (wireless-network)

**Overview**

Use this command to hide the SSID for a selected wireless network.

Use the **no** variant of this command to stop hiding the SSID for a selected wireless network.

**Syntax**

```
hide ssid
no hide ssid
```

**Default**

The default is Disabled, which means the SSID **is** included in the Access Point (AP) beacon frames. For more information, see the **Usage** section below.

**Mode**

Wireless Network Configuration

**Usage notes**

The SSID differentiates one wireless network from another, so all APs and all devices attempting to connect to a specific wireless network must use the same SSID to enable effective roaming.

SSIDs are included in beacon frames.

A beacon frame is one of the management frames in the IEEE 802.11 standard. Every compliant AP periodically sends beacon frames to advertise the presence of an AP in an area, its capabilities, and some configuration and security information to the client devices.

**Example**

To hide the SSID for network 20, use the following commands:

```
awplus# configure terminal
awplus(config)# wireless
awplus(config-wireless)# network 20
awplus(config-wireless-network)# hide-ssid
```

**Related commands**

ssid (wireless-network)

network (wireless)

**Command changes**

Version 5.4.7-2.4: command added.

# hwtype

**Overview** Use this command to configure the hardware type used for a wireless AP profile.

Use the **no** variant of this command to revert the AP hardware type to the default.

**Syntax**

```
hwtype <modelname>
hwtype tq {single|dual|triple} spec {11ac|11n}
hwtype tq dual spec {11ac|11n}
no hwtype
```

| Parameter | Description |
|---|---|
| *<modelname>* | Set the model name. See the table below for a list of model names and associated settings. |
| `tq` | The hardware type used for the AT-TQ series |
| `mws` | The hardware type used for the AT-MWS series |
| `single` | Single antenna model. Only available for the AT-TQ series. |
| `dual` | Dual antenna model. |
| `spec` | Enable selection of support mode of the hardware type |
| `11ac` | Support for 802.11ac mode. |
| `11n` | Support for 802.11n mode. |

**Table 1:** AP **modelname** parameters with applicable values

| modelname | series | bands supported | standard supported |
|---|---|---|---|
| at-tq5403<br>at-tqm5403<br>at-tq5403e | tq | triple | 11ac |
| at-tq4400<br>at-tq4400e<br>at-tq4600<br>at-tq1402<br>at-tqm1402 | tq | dual | 11ac |
| at-tq2450<br>at-tq3400<br>at-tq3600 | tq | dual | 11n |
| at-tq3200 | tq | single | 11n |
| at-mws1750ap<br>at-mws2533ap | mws | dual | 11ac |
| at-mws600ap | mws | dual | 11n |

**Default** hwtype tq dual spec 11ac.

**Mode** Wireless AP Profile Configuration

**Usage notes** This command may reset the following configuration commands for:

- antenna (AP profile)
- mode
- bandwidth
- channel

**Example** To configure the AP hardware type as an AT-TQ5403 (TQ series, triple antenna, supported by 802.11ac), use the following commands:

```
awplus# configure terminal
awplus(config)# wireless
awplus(config-wireless)# ap-profile 2
awplus(config-wireless-ap-prof)# hwtype tq triple 11ac
```

To use the <*modelname*> parameter to configure the AP hardware type as an AT-TQ5403 (TQ series, triple antenna, supported by 802.11ac), use the following commands:

```
awplus# configure terminal
awplus(config)# wireless
awplus(config-wireless)# ap-profile 2
awplus(config-wireless-ap-prof)# hwtype at-tq5403
```

**Related commands** ap-profile (wireless)

show wireless ap-profile

show wireless ap capability

channel (wireless-ap-radio)

antenna (wireless-ap-prof-radio)

bandwidth (wireless-ap-prof-radio)

channels (wireless-ap-prof-radio)

**Command changes** Version 5.4.7-2.4: command added

Version 5.4.9-1.1: <*modelname*> parameter added.

# index

**Overview** Use this command to designate the key index number for WEP security.

Use the **no** variant of this command to use the default key index number for WEP security.

**Syntax**

```
index <1-4>
no index
```

| Parameter | Description |
|---|---|
| *<1-4>* | The index number for the WEP security key. |

**Default** The default key index number is set to **1**.

**Mode** Wireless Security WEP Configuration

**Example** To assign key index number 3 for a WEP security configuration, use the following commands:

```
awplus# configure terminal
awplus(config)# wireless
awplus(config-wireless)# network 10 mode wep
awplus(config-wireless-sec-wep)# index 3
```

**Related commands** security (wireless))

key (wireless-sec-wep)

**Command changes** Version 5.4.7-2.4: command added.

# initialization-button enable

**Overview**

Use this command to enable the initialization button on a wireless AP using the selected AP profile.

Use the **no** variant of this command to disable the initialization button on a wireless AP using the selected AP profile.

**Syntax**

```
initialization-button enable
no initialization-button enable
```

**Default**

Enabled.

**Mode**

Wireless AP Profile Configuration

**Usage notes**

This command effects only APs which have an initialization button.

**Example**

To enable the initialization button on APs which use **ap-profile 100**, use the following commands:

```
awplus# configure terminal
awplus(config)# wireless
awplus(config-wireless)# ap-profile 100
awplus(config-wireless-ap-prof)# initialization-button enable
```

**Related commands**

ap-profile (wireless)

show wireless ap-profile

**Command changes**

Version 5.4.7-2.4: command added.

# ip-address (wireless-ap)

**Overview**

Use this command to specify the IP address of a wireless Access Point (AP).

Use the **no** variant of this command to remove the IP address of the selected wireless AP.

**Syntax**

```
ip-address <ip-address>
no ip-address
```

| Parameter | Description |
|---|---|
| *<ip-address>* | IPv4 address of the wireless AP. |

**Default**

Not set.

**Mode**

Wireless AP Configuration

**Example**

To specify an IPv4 address for a wireless AP, use the following commands:

```
awplus# configure terminal
awplus(config)# wireless
awplus(config-wireless)# ap 100
awplus(config-wireless-ap)# ip address 192.168.0.100
```

**Related commands**

ap

show wireless ap

**Command changes**

Version 5.4.7-2.4: command added.

# key

**Overview** Use this command to designate the shared secret key used on a wireless AP belonging to channel blanket.

Use the **no** variant of this command to remove a designated key for a wireless AP belonging to channel blanket.

**Syntax**

```
key [encrypted] <key-string>
no key
```

| Parameter | Description |
|---|---|
| `encrypted` | This parameter is displayed in show running-config output to indicate that it is displaying the password in encrypted form. You should not enter encrypted on the CLI yourself. |
| `<key-string>` | The usable key-string characters. They can be up to16 letters using ASCII Printable excluding double-quote and single-quote. |

**Default** Not set.

**Mode** Wireless AP Profile Channel Blanket Configuration

**Usage notes** When not set, a random shared key is automatically genererated.

**Example** To configure AP profile100, with a channel blanket key, use the following commands:

```
awplus# configure terminal
awplus(config)# wireless
awplus(config-wireless)# ap-profile 100
awplus(config-wireless-ap-prof)# channel-blanket
awplus(config-wireless-ap-prof-cb)# key L51nJ6Cp/A-bwXx3
```

**Related commands**

ap-profile (wireless-ap)

show wireless ap-profile

channel-blanket

**Command changes** Version 5.4.9-1.1: command added

# key (wireless-sc-prof)

**Overview**

Use this command to set the Smart Connect profile security key.

Use the **no** variant of this command to remove the security key from the Smart Connect profile.

**Syntax**

```
key <key-word>
no key
```

| Parameter | Description |
|---|---|
| *<key-word>* | The WPA shared key. This is an alphanumeric string 8-64 characters long. |

**Default**

Not set

**Mode**

Wireless Smart Connect Profile Configuration

**Usage notes**

This command configures the WPA shared key for the Smart Connect network. If no key is set, the security key will be automatically generated.

**Example**

To set the security key for Smart Connect profile 10 to 'sc10-secret-keyword', use the commands:

```
awplus# configure terminal
awplus(config)# wireless
awplus(config-wireless)# smart-connect-profile 10
awplus(config-wireless-sc-prof)# key sc10-secret-keyword
```

**Related commands**

smart-connect-profile

show wireless ap-profile

**Command changes**

Version 5.5.0-0.1: command added

# key (wireless-sec-wep)

**Overview** Use this command to set the key-string for a WEP security configuration.

Use the **no** variant of this command to remove a key-string for a WEP security configuration.

**Syntax**

```
key <1-4> [encrypted] <key-string>
no key <1-4>
```

| Parameter | Description |
|---|---|
| *<1-4>* | The key's index number. To configure the index number(s), use the **index** command. |
| `encrypted` | This parameter is displayed in **show running-config** output to indicate that it is displaying the password in encrypted form. You should not enter **encrypted** on the CLI yourself. |
| *<key-string>* | The usable key-string characters, which depend on the key-string type. Use the **type** command to configure the key-string character type.<br>See the table in the usage section below for more information. |

**Default** Not set.

**Mode** Wireless Security WEP Configuration

**Usage notes** When using the **key** command, also use the **type** command to set the key-string type to either ASCII or Hex, this will also set the character and bit number limits as follows.

| Type | Number of bits | Number of characters | Case sensitive |
|---|---|---|---|
| ascii | 64 | 5 | Yes |
| ascii | 128 | 13 | Yes |
| hex | 64 | 10 | No |
| hex | 128 | 26 | No |

**Example** To assign the word 'friend' as the key-string at index 3 for a WEP security configuration, use the following commands:

```
awplus# configure terminal
awplus(config)# wireless
awplus(config-wireless)# security 10 mode wep
awplus(config-wireless-sec-wep)# type ascii
awplus(config-wireless-sec-wep)# key 3 friend
```

**Related commands**

type (wireless-sec-wep)

length (wireless-sec-wep)

index

**Command changes**

Version 5.4.7-2.4: command added.

# key (wireless-sec-wpa-psnl)

**Overview**

Use this command to set a string as the shared secret key on a wireless security WPA-personal configuration.

Use the **no** variant of this command to reset the shared key to the default.

**Syntax**

```
key [encrypted] <key-string>
no key
```

| Parameter | Description |
|---|---|
| `encrypted` | This parameter is displayed in **show running-config** output to indicate that it is displaying the password in encrypted form. You should not enter **encrypted** on the CLI yourself. |
| *<key-string>* | The usable key-string characters for the configuration. You can enter 8 to 63 ASCII characters which are case-sensitive. |

**Default**

Not set.

**Mode**

Wireless Security WPA-personal Configuration

**Example**

To set **friend** as the shared secret key for a WPA-personal configuration, use the following commands:

```
awplus# configure terminal
awplus(config)# wireless
awplus(config-wireless)# security 110 mode wpa-personal
awplus(config-wireless-sec-wpa-psnl)# key friend
```

**Related commands**

security (wireless)

**Command changes**

Version 5.4.7-2.4: command added.

# led enable

**Overview**

Use this command to turn on the LED of a wireless AP using the selected AP profile.

Use the **no** variant of this command to disable the LED of a wireless AP using the selected AP profile.

**Syntax**

```
led enable
no led enable
```

**Default**

Enabled.

**Mode**

Wireless AP Profile Configuration

**Example**

To turn off the LED of a wireless AP using ap-profile 100, use the following commands:

```
awplus# configure terminal
awplus(config)# wireless
awplus(config-wireless)# ap-profile 100
awplus(config-wireless-ap-prof)# no led enable
```

**Related commands**

ap-profile (wireless)

show wireless ap-profile

**Command changes**

Version 5.4.7-2.4: command added

# length (wireless-sec-wep)

**Overview**

Use this command to set the key length for a WEP key on a wireless security WEP configuration.

Use the **no** variant of this command to reset the key length for a WEP key to the default value.

**Syntax**

```
length {64|128}
no length
```

| Parameter | Description |
|---|---|
| 64 | Set 64 bit as the key length for a WEP key |
| 128 | Set 128 bit as the key length for a WEP key |

**Default**

128 bit.

**Mode**

Wireless Security WEP Configuration

**Example**

To configure 64 bit length as the key length for a WEP key on a wireless security WEP configuration, use the following commands:

```
awplus# configure terminal
awplus(config)# wireless
awplus(config-wireless)# network 10 mode wep
awplus(config-wireless-sec-wep)# length 64
```

**Related commands**

security (wireless)

key (wireless-sec-wep)

**Command changes**

Version 5.4.7-2.4: command added.

# log enable destination

**Overview**

Use this command to enable the external media function storing of wireless client and neighbor AP log files.

Use the **no** variant of this command to disable the external media function storing of wireless client and neighbor AP log files.

**Syntax**

```
log enable destination {usb|card}
no log enable
```

| Parameter | Description |
|---|---|
| usb | USB storage device |
| card | SD card storage device |

**Default**

Disabled, there is no destination storage device set as a default.

**Mode**

Wireless Configuration

**Example**

To enable the log function and configure the log store destination to USB, use the commands:

```
awplus# configure terminal
awplus(config)# wireless
awplus(config-wireless)# log enable destination usb
```

**Related commands**

log size wireless-client

log rotate wireless-client

log interval neighbor-ap

show wireless

**Command changes**

Version 5.4.9-2.3: command added

# log interval neighbor-ap

**Overview**

Use this command to configure the interval times for storing a neighbor AP log.

Use the **no** variant of this command to revert to the default interval time of 30 minutes.

**Syntax**

```
log interval neighbor-ap <30-1440>
no log interval
```

| Parameter | Description |
|---|---|
| *<30-1440>* | The interval time between storing neighbor AP logs. Enter a number in the range of 30 (min) -1440 (1 day). |

**Default**

30 minutes

**Mode**

Wireless Configuration

**Example**

To configure a 60 minute interval time for storing neighbor AP logs, use the commands:

```
awplus# configure terminal
awplus(config)# wireless
awplus(config-wireless)# log interval neighbor-ap 60
```

**Related commands**

log enable destination

log rotate neighbor-ap

show wireless

**Command changes**

Version 5.4.9-2.3: command added

# log rotate neighbor-ap

**Overview**

Use this command to configure the number of rotations for storing neighbor AP log files. When the configured value is reached, the oldest log file is deleted and the latest log file is stored.

Use the **no** variant of this command to revert to the default value of 1.

**Syntax**

```
log rotate neighbor-ap <0-65534>
no log rotate neigbor-ap
```

| Parameter | Description |
|---|---|
| *<0-65534>* | The number of rotations a neighbor AP log is stored for, before deleting the oldest stored file. |

**Default**

1

**Mode**

Wireless Configuration

**Example**

To configure 100 generations of a neighbor's AP log files to be stored, use the commands:

```
awplus# configure terminal
awplus(config)# wireless
awplus(config-wireless)# log rotate neighbor-ap 100
```

**Related commands**

log enable destination

log interval neighbor-ap

show wireless

**Command changes**

Version 5.4.9-2.3: command added

# log rotate wireless-client

**Overview**

Use this command to configure the number of rotations for storing wireless client log files.

You can determine the size of each wireless client log by using this command and the **log size wireless-client** command together.

For example, log size wireless-client 50, log rotate wireless-client 4 -> 50 / (4+1) = 10Kbytes.

Use the **no** variant of this command to revert to the default value of 1.

**Syntax**

```
log rotate wireless-client <0-255>
no log rotate wireless-client
```

| Parameter | Description |
|---|---|
| *<0-255>* | The number of rotations for a wireless-client log.<br>Set a number in the range 0-255. |

**Default**

The default number of rotations is 1.

**Mode**

Wireless Configuration

**Example**

To configure 10 generations of a wireless-client log file, use the commands:

```
awplus# configure terminal
awplus(config)# wireless
awplus(config-wireless)# log rotate wireless-client 10
```

**Related commands**

log enable destination

log size wireless-client

show wireless

**Command changes**

Version 5.4.9-2.3: command added

# log size wireless-client

**Overview**

Use this command to configure the file size used for storing wireless client logs.

You can determine the size of each wireless client log by using this command and the **log rotate wireless-client** commands together.

For example, log size wireless-client 50, log rotate wireless-client 4 -> 50 / (4+1) = 10Kbytes.

Use the **no** variant of this command to revert to the default log size value.

**Syntax**

```
log size wireless-client <50-4194304>
no log size wireless-client
```

| Parameter | Description |
|---|---|
| *<50-4194304>* | Wireless client log size in kilobytes |

**Default**

50 kilobytes.

**Mode**

Wireless Configuration

**Example**

To configure a wireless-client log size of 1Mbyte, use the commands:

```
awplus# configure terminal
awplus(config)# wireless
awplus(config-wireless)# log size wireless-client 1000000
```

**Related commands**

log enable destination

log rotate wireless-client

show wireless

**Command changes**

Version 5.4.9-2.3: command added

# login username (wireless-ap)

**Overview**

Use this command to specify a username and password for a wireless Access Point (AP).

Use the **no** variant of this command to remove a username and password for a wireless AP.

**Syntax**

```
login username <username> password <password>
no login username
```

| Parameter | Description |
|---|---|
| *<username>* | The username for the selected AP. |
| *<password>* | An alphanumeric string of characters used as the password for the selected AP. |

**Default**

Not set.

**Mode**

Wireless AP Configuration

**Example**

To set the username **manager** and password **friend** for a wireless AP, use the following commands:

```
awplus# configure terminal
awplus(config)# wireless
awplus(config-wireless)# ap 100
awplus(config-wireless-ap)# login username manager password
friend
```

**Related commands**

ap

show wireless ap

**Command changes**

Version 5.4.7-2.4: command added.

# login-password (wireless-ap)

**Overview**

Use this command to set the login password for an Access Point (AP).

Use the **no** variant of this command to remove the login password for an AP.

**Syntax**

```
login-password <password>
no login-password
```

| Parameter | Description |
|---|---|
| *<password>* | An alphanumeric string of characters used as the password for the selected AP. |

**Default**

Not set.

**Mode**

Wireless AP Configuration

**Example**

To configure a password for AP 100, use the following commands:

```
awplus# configure terminal
awplus(config)# wireless
awplus(config-wireless)# ap 100
awplus(config-wireless-ap)# login-password friend
```

**Related commands**

ap

show wireless ap

**Command changes**

Version 5.4.7-2.4: command added.

# mac-address (wireless-ap)

**Overview**

Use this command to specify the MAC address for a wireless Access Point (AP).

Use the **no** variant of this command to remove the MAC address of the selected wireless AP.

**Syntax**

```
mac-address <mac-address>
no mac-address
```

| Parameter | Description |
|---|---|
| *<mac-address>* | The MAC address of the wireless AP in hexadecimal notation with the format HHHH.HHHH.HHHH. |

**Default**

Not set.

**Mode**

Wireless AP Configuration

**Example**

To specify a MAC address for a wireless AP, use the following commands:

```
awplus# configure terminal
awplus(config)# wireless
awplus(config-wireless)# ap 100
awplus(config-wireless-ap)# mac-address 0000.5e00.5301
```

**Related commands**

ap

show wireless ap

**Command changes**

Version 5.4.7-2.4: command added.

# mac-auth password

**Overview**

Use this command to change the password for MAC-based authentication.

Use the **no** variant of this command to return the password to its default.

**Syntax**

```
mac-auth password <password>
no mac-auth password
```

| Parameter | Description |
|---|---|
| *<password>* | The new password. Passwords can be up to 64 characters in length and can contain any printable characters except ?, " (double quotes), and spaces. |

**Default**

By default the password is the MAC address of the supplicant.

**Mode**

Wireless Network Configuration

**Example**

To set the password for MAC authentication to be 'SECRET', use the following commands:

```
awplus# configure terminal
awplus(config)# wireless
awplus(config-wireless)# network 20
awplus(config-wireless-network)# mac-auth password SECRET
```

To reset the password for MAC authentication to the default, use the following commands:

```
awplus# configure terminal
awplus(config)# wireless
awplus(config-wireless)# network 20
awplus(config-wireless-network)# no mac-auth password
```

**Related commands**

enable (wireless-network-cp)

network (wireless)

mac-auth radius auth group (wireless-network)

mac-auth username

**Command changes**

Version 5.4.9-2.1: command added

# mac-auth radius auth group (wireless-network)

**Overview**

Use this command to enable MAC authentication of clients with a RADIUS group in a wireless network.

Use the **no** variant of this command to disable MAC authentication with a RADIUS group.

**Syntax**

```
mac-auth radius auth group {radius|<group-name>}
no mac-auth radius auth group
```

| Parameter | Description |
|---|---|
| `radius` | Use a RADIUS group, which means **all** RADIUS servers. |
| *<group-name>* | The RADIUS server group. |

**Default**

Not set.

**Mode**

Wireless Network.

**Usage notes**

This command enables MAC authentication and designates a RADIUS server group to authenticate clients on a wireless network. RADIUS server groups are defined using the **aaa group server** command. RADIUS server groups can consist of multiple server hosts, but this command only uses two servers.

**Example**

To enable MAC authentication with a RADIUS server group, use the following commands:

```
awplus# configure terminal
awplus(config)# wireless
awplus(config-wireless)# network 10
awplus(config-wireless-network)# mac-auth radius auth group
radius
```

**Related commands**

network (wireless)

**Command changes**

Version 5.4.7-2.4: command added.

# mac-auth username

**Overview**

Use this command to set the format of the MAC address in the username and password field when a request for MAC-based authorization is sent to a RADIUS server.

Use the **no** variant of this command to reset the format to the default of hyphen and lower-case.

**Syntax**

```
mac-auth username {hyphen|colon|unformatted}
{lower-case|upper-case}
```

```
no mac-auth username
```

| Parameter | Description |
|---|---|
| hyphen | The MAC address includes hyphens, e.g. xx-xx-xx-xx-xx-xx. |
| colon | The MAC address includes colons, e.g. xx:xx:xx:xx:xx:xx. |
| unformatted | The MAC address does not include hyphens or colons, e.g. xxxxxxxxxxxx. |
| lower-case | The MAC address uses lower-case characters (a-f). |
| upper-case | The MAC address uses upper-case characters (A-F). |

**Default**

Default format is hyphen lower-case.

**Mode**

Wireless Network Configuration

**Example**

To configure the format of the MAC address in the username and password field to be colon and upper-case, use the following commands:

```
awplus# configure terminal
awplus(config)# wireless
awplus(config-wireless)# network 20
awplus(config-wireless-network)# mac-auth username colon
upper-case
```

To reset the format of the MAC address in the username and password field to the default, use the following commands:

```
awplus# configure terminal
awplus(config)# wireless
awplus(config-wireless)# network 20
awplus(config-wireless-network)# no mac-auth username
```

**Related commands**

enable (wireless-network-cp)

mac-auth password

mac-auth radius auth group (wireless-network)

network (wireless)

**Command changes** Version 5.4.9-2.1: command added

# management address

**Overview**

Use this command to configure a management address on the router for transmitting Autonomous Wave Control (AWC) packets to Access Points (APs). The management address must already exist on a device interface.

Use the **no** variant of this command to turn off AP management by AWC on the management address.

**Syntax**

```
managment address <ipv4-addr>
no management address
```

| Parameter | Description |
|---|---|
| *<ipv4-addr>* | Set the IPv4 interface address used for AP management by AWC. |
| no | Unset the IPv4 management address used for AP management by AWC. |

**Default**

Not enabled.

**Mode**

Wireless Configuration

**Example**

To configure an AP management interface address, use the following commands:

```
awplus# configure terminal
awplus(config)# wireless
awplus(config-wireless)# management address 192.168.0.1
```

To remove an AP management interface address, use the following commands:

```
awplus# configure terminal
awplus(config)# wireless
awplus(config-wireless)# no management address
```

**Related commands**

enable (wireless)

**Command changes**

Version 5.4.7-2.4: command added.

# management-frame-protection enable (wireless-sec-wpa-ent)

**Overview**

Use this command to enable management frame protection (MFP) in a WPA-enterprise configuration.

MFP provides security for management messages passed between wireless Access Points (APs) and client stations. MFP checks management messages for potential security issues such as rogue devices and denial-of-service attacks.

Use the **no** variant of this command to disable MFP.

**Syntax**

```
management-frame-protection enable
no management-frame-protection enable
```

**Default**

Enabled.

**Mode**

Wireless Security WPA-enterprise Configuration

**Usage notes**

This command is supported on the following AT-TQ series devices: AT-TQ4400, AT-TQ4400e, and AT-TQ4600 with dual-band 802.11ac. Other AT-TQ series and MWS series devices do not support MFP.

**Example**

To **disable** MFP, use the following commands:

```
awplus# configure terminal
awplus(config)# wireless
awplus(config-wireless)# security 110 mode wpa-enterprise
awplus(config-wireless-sec-wpa-psnl)# no
management-frame-protection enable
```

**Related commands**

security (wireless)

management-frame-protection enable (wireless-sec-wpa-psnl)

**Command changes**

Version 5.4.7-2.4: command added.

# management-frame-protection enable (wireless-sec-wpa-psnl)

**Overview**

Use this command to enable Management Frame Protection (MFP). MFP provides security for management messages passed between wireless Access Points (APs) and client stations. MFP checks management messages for potential security issues such as rogue devices and denial-of-service attacks.

This parameter will be ignored when the version list includes **wpa3** as WPA3 requires that MFP is enabled, see versions (wireless-sec-wpa-psnl).

Use the **no** variant of this command to disable MFP.

**Syntax**

```
management-frame-protection enable
no management-frame-protection enable
```

**Default**

Enabled.

**Mode**

Wireless Security WPA-personal Configuration

**Usage notes**

This command is supported on the following AT-TQ series devices: AT-TQ4400, AT-TQ4400e, and AT-TQ4600 with dual-band 802.11ac. Other AT-TQ series and MWS series devices do not support MFP.

**Example**

To disable MFP, use the following commands:

```
awplus# configure terminal
awplus(config)# wireless
awplus(config-wireless)# security 100 mode wpa-personal
awplus(config-wireless-sec-wpa-psnl)# no
management-frame-protection enable
```

**Related commands**

security (wireless)

management-frame-protection enable (wireless-sec-wpa-ent)

**Command changes**

Version 5.4.7-2.4: command added.

# max-clients

**Overview** Use this command to set the number of clients able to connect to a wireless Access Point (AP).

Use the **no** variant of this command to return the number of clients able to connect to the default value.

**Syntax**

```
max-clients <0-200>
no max-clients
```

| Parameter | Description |
|---|---|
| *<0-200>* | The number of clients able to connect to the wireless AP. Configuring the **number 0** will disable all clients from connecting to the selected AP. For the **MWS** series, the range is: *<0-127>* with a default of 127. |

**Default** 200.

**Mode** Wireless AP Profile Radio Configuration

**Example** To set the maximum number of clients that can connect to a wireless AP to 100, use the following commands:

```
awplus# configure terminal
awplus(config)# wireless
awplus(config-wireless)# ap-profile 100
awplus(config-wireless-ap-prof)# radio 2
awplus(config-wireless-ap-prof-radio)# max-clients 100
```

**Related commands** radio (wireless-ap-profile)

**Command changes** Version 5.4.7-2.4: command added.

# mode (wireless-ap-prof-radio)

**Overview** Use this command to set the **wireless standard** and **bandwidth** mode used by the Access Points (APs) in a secure wireless security configuration. The AP type or model determines which mode to select.

Use the **no** variant of this command to set the mode to the default values specified for an AP type.

**Syntax**

```
mode {a|bg|a-n|bg-n|n-only-a|n-only-g|a-n-ac|n-ac}
no mode
```

| Parameter | Standard | Description |
|---|---|---|
| a | 802.11a | Bandwidth 54Mbps - 5GHz |
| bg | 802.11bg | Bandwidths 11 and 54Mbps- 2.4GHz. |
| a-n | 802.11a/n | Bandwidths 54 and 300 Mbps - 2.4GHz. |
| bg-n | 802.11b/g/n | Bandwidths 11, 54, and 300 Mbps - 2.4GHz |
| n-only-a | 802.11n | Bandwidth 300 Mbps using the 5GHz bandwidth |
| n-only-g | 802.11n | Bandwidth 300 Mbps using the 2.4GHz bandwidth |
| a-n-ac | 802.11a/n/ac | Dual-band: supporting simultaneous connections on both the 2.4 GHz and 5 GHz Wi-Fi bands. 802.11ac offers backward compatibility to 802.11b/g/n and bandwidth rated up to 1300 Mbps on the 5 GHz band plus up to 450 Mbps on 2.4 GHz. |
| n-ac | 802.11n/ac | Dual-band: Bandwidth 54, and 300Mbps using both the 2.4 and 5GHz frequencies. |

**Default** The default values change with each antenna type and AP.

**Mode** Wireless AP Profile Radio Configuration

**Example** To configure the wireless mode **a-n-ac** for AP profile 100, radio 2, use the following commands:

```
awplus# configure terminal
awplus(config)# wireless
awplus(config-wireless)# ap-profile 100
awplus(config-wireless-ap-prof)# radio 2
awplus(config-wireless-ap-prof-radio)# mode a-n-ac
```

**Related commands**

country-code

hwtype

radio (wireless-ap-profile)

**Command changes** Version 5.4.7-2.4: command added.

# mode (wireless-network-cp)

**Overview**

Use this command to set the Captive Portal (web authentication) mode.

Captive Portal lets wireless clients authenticate themselves or agree to terms and conditions before you grant them Wi-Fi access or external web access.

Use the **no** variant of this command to reset the Captive Portal mode to default.

**Syntax**

```
mode {click-through|radius|external-page-redirect}
no mode
```

| Parameter | Description |
|---|---|
| `radius` | The user name and password entered from the browser screen are sent to the RADIUS server and a network connection is permitted after successful authentication. |
| `click-through` | This method asks users to agree to the terms of use (click-through agreement) before allowing them to connect to the wireless network. |
| `external-page-redirect` | Redirect the authentication page to a user configured URL such as a third party Captive Portal vendor page. |

**Default**

click-through

**Mode**

Wireless Network Captive Portal Configuration

**Usage notes**

Click-through is only valid for TQ4400, TQ4600, TQ4400e, TQ1402, TQ5403, TQ5403e, TQm1402, and TQm5403 wireless access points.

Click-through is not supported on TQ2450, TQ3200, TQ3400 or TQ3600 APs. Set the mode to **radius** (external RADIUS authentication) for these devices.

**Example**

To set the Captive Portal authentication mode as RADIUS, use the commands:

```
awplus# configure terminal
awplus(config)# wireless
awplus(config-wireless)# network 20
awplus(config-wireless-network)# captive-portal
awplus(config-wireless-network-cp)# mode radius
```

**Related commands**

captive-portal

enable (wireless-network-cp)

mac-auth password

mac-auth username

page-proxy-url

radius auth group (wireless-network-cp)

redirect-url

session-keep

**Command changes**

Version 5.4.9-1.1: command added

Version 5.5.0-1.3: **external-page-redirect** parameter added

# network (wireless)

**Overview**

Use this command to configure an Autonomous Wave Control (AWC) network.

If the network doesn't exist, then this command creates it.

Use the **no** variant of this command to remove an AWC network.

**Syntax**

`network <1-65535>`

| Parameter | Description |
|---|---|
| *<1-65535>* | The network ID number |

**Default**

Not set.

**Mode**

Wireless Configuration

**Usage notes**

This commands adds a network configuration and enters the network configuration mode.

**Example**

To configure an AWC network with an ID of 20, use the following commands:

```
awplus# configure terminal
awplus(config)# wireless
awplus(config-wireless)# network 20
```

**Related commands**

show wireless network

vap network (wireless-ap-prof-radio)

description (wireless-network)

vlan (wireless-network)

ssid (wireless-network)

hide-ssid (wireless-network)

band-steering (wireless-network)

security (wireless-network)

vap network (wireless-ap-prof-radio)

**Command changes**

Version 5.4.7-2.4: command added.

# ntp designated-server

**Overview**

Use this command to designate the NTP server that a wireless Access point (AP) refers to.

Use the **no** variant of this command to remove the configured IP address or host-name of the NTP server.

**Syntax**

```
ntp designated-server {ip <ip-address>|host <host-name>}
no ntp designated-server
```

| Parameter | Description |
|---|---|
| *<ip-address>* | Specify the IP address of the NTP server, entered in the form A.B.C.D for an IPv4 address. |
| *<host-name>* | Specify the host-name for the NTP server |

**Default**

Disabled.

**Mode**

Wireless AP Profile Configuration

**Usage notes**

This command sets the NTP server that a wireless AP refers to. If the NTP server is disabled, then the AP will synchronize its time with the AWC router.

This is because the AP can not hold current time after a reboot because it does not have a real-time clock.

Therefore, the NTP master must be configured on the AWC router.

**Example**

To configure an NTP server with an IP address of 192.168.0.254 for ap-profile 100, use the following commands:

```
awplus# configure terminal
awplus(config)# wireless
awplus(config-wireless)# ap-profile 100
awplus(config-wireless-ap-prof)# ntp designated-server
192.168.0.154
```

**Related commands**

ap-profile (wireless)

show wireless ap-profile

ntp designated-server period

**Command changes**

Version 5.4.7-2.4: command added

# ntp designated-server enable

**Overview**

Use this command to configure NTP on a wireless Access Point (AP).

Use the **no** variant of this command to disable the NTP feature on an AP.

**Syntax**

```
ntp designated-server enable
no ntp designated-server enable
```

**Default**

Enabled.

**Mode**

Wireless AP Profile Configuration

**Example**

To disable NTP for AP-profile 100, use the following commands:

```
awplus# configure terminal
awplus(config)# wireless
awplus(config-wireless)# ap-profile 100
awplus(config-wireless-ap-prof)# no ntp designated-server
enable
```

**Related commands**

ntp designated-server

**Command changes**

Version 5.4.7-2.4: command added.

# ntp designated-server period

**Overview**

Use this command to set the time adjustment period for an NTP server. This is the time adjustment period for a wireless AP using the selected AP profile.

Use the **no** variant of this command to reset the time adjustment period to the default of 10 minutes.

**Syntax**

```
ntp designated-server period <1-9999>
no ntp designated-server period
```

| Parameter | Description |
|---|---|
| *<1-9999>* | The time adjustment period for the NTP server in minutes. |

**Default**

10 minutes.

**Mode**

Wireless AP Profile Configuration

**Example**

To configure 30 minutes as the NTP server time adjustment period for ap-profile 100, use the following commands:

```
awplus# configure terminal
awplus(config)# wireless
awplus(config-wireless)# ap-profile 100
awplus(config-wireless-ap-prof)# ntp designated-server
192.168.0.254
awplus(config-wireless-ap-prof)# ntp designated-server period
30
```

**Related commands**

ap-profile (wireless)

show wireless ap-profile

ntp designated-server

**Command changes**

Version 5.4.7-2.4: command added.

# outdoor

**Overview**

Use this command to designate that a wireless AP is located outdoors.

Use the **no** variant of this command to designate when a wireless AP is not located outdoors.

**Syntax**

```
outdoor
no outdoor
```

**Default**

No outdoor.

**Mode**

Wireless AP Profile Configuration

**Usage notes**

This command indicates whether the wireless AP is located outdoors, and selects the mode and channel that corresponds to this. To configure a channel number, use the **channel** command in **wireless-ap-prof-radio** mode. If you configure an invalid channel number, an error message displays the valid channels that you may select in your region.

The command is ignored when the AP is already configured using the **hwtype** command.

**Example**

To configure an AP to be located outdoors, use the following commands:

```
awplus# configure terminal
awplus(config)# wireless
awplus(config-wireless)# ap-profile 2
awplus(config-wireless-ap-prof)# outdoor
```

**Related commands**

ap-profile (wireless)

show wireless ap-profile

channel (wireless-ap-radio)

bandwidth (wireless-ap-prof-radio)

channel (wireless-ap-radio)

**Command changes**

Version 5.4.7-2.4: command added

# page-proxy-url

**Overview**

Use this command in Captive Portal mode to set the location of the custom page to display for web authentication. This page will be displayed instead of the wireless access point's built-in authentication or click-through page.

Use the **no** variant of this command to remove the URL pointing to the custom web authentication page.

**Syntax**

```
page-proxy-url <URL>
no page-proxy-url
```

| Parameter | Description |
|---|---|
| *<URL>* | URL of external web server (hostname or dotted IP notation). |

**Default**

No custom page is set by default.

**Mode**

Wireless Network Captive Portal Configuration

**Usage notes**

This setting is valid only for AT-TQ5403, AT-TQm5403, AT-TQ5403e, AT-TQ1402, and AT-TQm1402 wireless access points.

**Example**

To enable and set the web authentication proxy page, use the commands:

```
awplus# configure terminal
awplus(config)# wireless
awplus(config-wireless)# network 20
awplus(config-wireless-network)# captive-portal
awplus(config-wireless-network-cp)# page-proxy-url
http://www.mydomain.com/login_page
```

**Related commands**

captive-portal

enable (wireless-network-cp)

mac-auth password

mac-auth username

page-proxy-url

radius auth group (wireless-network-cp)

redirect-url

session-keep

mode (wireless-network-cp)

**Command changes**

Version 5.4.9-1.1: command added

# peer (wireless-wds)

**Overview**

Use this command to add a pair of wireless Access Points (APs) to a WDS peer list.

Use the **no** variant of this command to remove a pair of wireless APs from a WDS peer list.

**Syntax**

```
peer ap <1-65535> radio <1-3> {ap <1-65535>|mac <mac-addr>}
radio <1-3>
```

```
no peer
```

| Parameter | Description |
|---|---|
| ap | Signifies that the first AP identifier follows. |
| *<1-65535>* | The first AP identifier. |
| radio | Select the radio interface of the first AP. |
| *<1-3>* | Designate the radio interface for the first AP. |
| ap | Signifies that the second AP identifier follows. |
| *<1-65535>* | The second AP identifier. |
| mac | Signifies that the MAC address of the second AP follows. |
| *<mac-addr>* | The MAC address of the second AP.<br>Enter the address in the format <HHHH.HHHH.HHHH> where *H* is a hexadecimal number. |
| radio | Select the radio interface of the second AP. |
| *<1-3>* | The radio interface for the second AP. |

**Default**

There are no APs configured in a WDS peer list by default.

**Mode**

Wireless WDS Configuration

**Example**

To add a pair of wireless APs to a WDS peer list, use the following commands:

```
awplus# configure terminal
awplus(config)# wireless
awplus(config-wireless)# wds 10
awplus(config-wireless-wds)# peer ap 10 radio 1 ap 20 radio 1
```

**Related commands**

wds

show wireless wds

ap

**Command changes**

Version 5.4.7-2.4: command added.

# permit host (wireless-ap-prof-snmp)

**Overview**

Use this command to set the SNMP permit host for the target AP profile. This command is valid for SNMP v1 and v2c only.

Use the **no** variant of this command to remove the SNMP permit host from the AP profile.

**Syntax**

```
permit host <host-name>
no permit host
```

| Parameter | Description |
|---|---|
| *<host-name>* | Respond only to SNMP requests from the specified host name. For example FQDN, IP address, or subnet mask (manager.your.domain.com, 10.10.1.37, 192.168.1.1/24. |

**Default**

Not set

**Mode**

Wireless AP Profile SNMP Configuration

**Example**

To set the SNMP permit host to '192.168.1.1', use the commands:

```
awplus# configure terminal
awplus(config)# wireless
awplus(config-wireless)# ap-profile 2
awplus(config-wireless-ap-prof)# snmp
awplus(config-wireless-ap-prof-snmp)# permit host 192.168.1.1
```

To remove the SNMP permit host '192.168.1.1', use the commands:

```
awplus# configure terminal
awplus(config)# wireless
awplus(config-wireless)# ap-profile 2
awplus(config-wireless-ap-prof)# snmp
awplus(config-wireless-ap-prof-snmp)# no permit host
```

**Related commands**

show wireless ap-profile

snmp (wireless-ap-prof)

version (wireless-ap-prof-snmp)

**Command changes**

Version 5.5.0-2.1: command added

# port (wireless-ap-prof-snmp)

**Overview**

Use this command to set the SNMP listening port number for the target AP profile.

Use the **no** variant of this command to set the SNMP listening port back to the default (161).

**Syntax**

```
port <1-65535>
no port
```

| Parameter | Description |
|---|---|
| *<1-65535>* | The SNMP listening port number to set. |

**Default**

161

**Mode**

Wireless AP Profile SNMP Configuration

**Example**

To set the SNMP listening port to 166, use the commands:

```
awplus# configure terminal
awplus(config)# wireless
awplus(config-wireless)# ap-profile 2
awplus(config-wireless-ap-prof)# snmp
awplus(config-wireless-ap-prof-snmp)# port 166
```

To set the SNMP listening port back to the defautl (161), use the commands:

```
awplus# configure terminal
awplus(config)# wireless
awplus(config-wireless)# ap-profile 2
awplus(config-wireless-ap-prof)# snmp
awplus(config-wireless-ap-prof-snmp)# no port
```

**Related commands**

show wireless ap-profile

snmp (wireless-ap-prof)

version (wireless-ap-prof-snmp)

**Command changes**

Version 5.5.0-2.1: command added

# power (wireless-ap-radio)

**Overview**

Use this command to set the power level for client devices on a wireless Access Point (AP).

Use the **no** variant of this command to return the power level to its default value.

**Syntax**

```
power <1-100>
no power
```

| Parameter | Description |
|---|---|
| *<1-100>* | The percentage power level value. |

**Default**

A power level of 100% is the default.

**Mode**

Wireless AP Radio Configuration

**Example**

To set a power level of 30% for radio 2, use the following commands:

```
awplus# configure terminal
awplus(config)# wireless
awplus(config-wireless)# ap 100
awplus(config-wireless-ap)# radio 2
awplus(config-wireless-ap-radio)# power 30
```

**Related commands**

show wireless ap

radio (wireless-ap)

**Command changes**

Version 5.4.7-2.4: command added

# pre-authentication enable (wireless-sec-wpa-ent)

**Overview**

Use this command to enable WPA-enterprise pre-authentication for Access Points (APs) that have WPA2 clients.

Use the **no** variant of this command to disable WPA-enterprise pre-authentication.

**Syntax**

```
pre-authentication enable
no pre-authentication enable
```

**Default**

Enabled.

**Mode**

Wireless Security WPA-enterprise Configuration

**Usage notes**

Enable this option if the AP has WPA2 clients and you want the AP to share the pre-authentication packets from the clients with other access points. If it is enabled, this can speed up authentication for roaming clients who connect to multiple access points. This option does not apply to WPA clients.

The MWS series of devices do not support pre-authentication, therefore, you should **disable** this command on these devices.

**Example**

To disable pre-authentication on a WPA-enterprise configuration, use the following commands:

```
awplus# configure terminal
awplus(config)# wireless
awplus(config-wireless)# security 210 mode wpa-enterprise
awplus(config-wireless-sec-wpa-ent)# no pre-authentication
enable
```

**Related commands**

security (wireless)

**Command changes**

Version 5.4.7-2.4: command added

# radio (wireless-ap)

**Overview** Use this command to enter **wireless-ap-radio** configuration mode.

**Syntax**

```
radio <1-3>
```

| Parameter | Description |
|---|---|
| *<1-3>* | The radio interface. |

**Mode** Wireless AP Configuration

**Example** To enter the AP Radio configuration mode, use the following commands:

```
awplus# configure terminal
awplus(config)# wireless
awplus(config-wireless)# ap 100
awplus(config-wireless-ap)# radio 2
awplus(config-wireless-ap-radio)#
```

**Related commands**

ap

show wireless ap

show wireless ap neighbors

show wireless ap client

description (wireless-ap)

power (wireless-ap-radio)

enable (wireless-ap)

**Command changes** Version 5.4.7-2.4: command added

# radio (wireless-ap-profile)

**Overview** Use this command to enter AP profile radio configuration mode. Once in this mode, you can create and modify the radio configuration parameters for an AP profile.

**Syntax**

```
radio <1-3>
```

| Parameter | Description |
|---|---|
| *<1-3>* | The radio interface within the AP profile. |

**Mode** Wireless AP Profile Configuration

**Example** To enter the AP profile radio configuration mode for interface 1, use the following commands:

```
awplus# configure terminal
awplus(config)# wireless
awplus(config-wireless)# ap-profile 2
awplus(config-wireless-ap-prof)# radio 1
awplus(config-wireless-ap-prof-radio)#
```

**Related commands**

ap-profile (wireless)

show wireless ap-profile

enable (wireless-ap-prof-radio)

antenna (wireless-ap-prof-radio)

mode (wireless-ap-prof-radio)

bandwidth (wireless-ap-prof-radio)

bandwidth (wireless-ap-prof-radio)

station-isolation enable (wireless-ap-prof-radio)

airtime-fairness enable (wireless-ap-prof-radio)

management-frame-protection enable (wireless-sec-wpa-psnl)

max-clients

channels (wireless-ap-prof-radio)

vap network (wireless-ap-prof-radio)

**Command changes** Version 5.4.7-2.4: command added.

# radius accounting enable

**Overview**

Use this command to configure RADIUS accounting on Captive Portal with external RADIUS.

Use the **no** variant of this command to disable RADIUS accounting on Captive Portal.

**Syntax**

```
radius accounting enable
no radius accounting enable
```

**Default**

Disabled.

**Mode**

Wireless Network Captive Portal Configuration

**Usage notes**

The server settings used by Captive Portal RADIUS accounting are those configured by the **radius auth group** command. The port number used is the same one set on the primary server by the command **radius-server host**.

**Example**

To configure RADIUS accounting on Captive Portal for network 20, use the commands:

```
awplus# configure terminal
awplus(config)# wireless
awplus(config-wireless)# network 20
awplus(config-wireless-network)# captive-portal
awplus(config-wireless-network-cp)# radius accounting enable
```

**Related commands**

captive-portal virtual-ip

radius accounting enable

radius auth group (wireless-network-cp)

**Command changes**

Version 5.5.0-1.3: command added

# radius auth group (wireless-network-cp)

**Overview**

Use this command to set the RADIUS server/s that wireless APs use for Captive Portal (web authentication).

Use the **no** variant of this command to remove the RADIUS server/s used for authentication.

**Syntax**

```
radius auth group {radius|<groupname>}
no radius auth group {radius|<groupname>}
```

| Parameter | Description |
|---|---|
| `radius` | Use a RADIUS server registered with the radius-server host command. |
| `<groupname>` | Use a RADIUS server that belongs to the specified server group. Use a server group created with the aaa group server radius command. |

**Default**

No RADIUS server set by default.

**Mode**

Wireless Network Captive Portal Configuration

**Usage notes**

This setting is only valid for TQ series APs. It has no effect on MWS series APs.

**Example**

To use the RADIUS group 'my_rad' for Captive Portal authentication, use the commands:

```
awplus# configure terminal
awplus(config)# wireless
awplus(config-wireless)# network 20
awplus(config-wireless-network)# captive-portal
awplus(config-wireless-network-cp)# mode radius
awplus(config-wireless-network-cp)# radius auth group my_rad
```

**Related commands**

aaa group server

captive-portal

enable (wireless-network-cp)

mac-auth password

mac-auth username

page-proxy-url

radius auth group (wireless-network-cp)

radius-server host

redirect-url

session-keep

mode (wireless-network-cp)

**Command changes** Version 5.4.9-1.1: command added

# radius auth group (wireless-sec-wpa-ent)

**Overview** Use this command to set the RADIUS server group used to authenticate clients in a wireless WPA-enterprise.

Use the **no** variant of this command to set the RADIUS server group to the default.

**Syntax**

```
radius auth group {radius|<group-name>}
no radius auth group
```

| Parameter | Description |
|---|---|
| `radius` | Use all RADIUS servers. |
| `<group-name>` | Server group name |

**Default** RADIUS (all RADIUS servers).

**Mode** Wireless Security WPA-enterprise Configuration

**Example** To set **radius**, which means all RADIUS servers, to authenticate a wireless WPA-enterprise, use the following commands:

```
awplus# configure terminal
awplus(config)# wireless
awplus(config-wireless)# security 210 mode wpa-enterprise
awplus(config-wireless-sec-wpa-ent)# radius auth group radius
```

**Related commands** security (wireless)

**Command changes** Version 5.4.7-2.4: command added

# redirect-url

**Overview**

Use this command to enable the redirect-url feature. After successful authentication this feature redirects the web browser to the URL specified in the command. If both session-keep and **redirect-url** are enabled, session-keep takes precedence.

Use the **no** variant of this command to disable the redirect-url feature.

**Syntax**

```
redirect-url <URL>
no redirect-url
```

| Parameter | Description |
|---|---|
| *<URL>* | URL of page to redirect the user to (hostname or dotted IP notation). |

**Default**

Not set by default.

**Mode**

Wireless Network Captive Portal Configuration

**Usage notes**

This setting is valid only for TQ4400, TQ4600, TQ4400e, TQ1402, TQ5403, TQ5403e, TQm1402, and TQm5403 APs. It has no effect on TQ2450, TQ3200, TQ3400, TQ3600 and MWS series APs.

**Example**

To enable and set the redirect-url for Captive Portal authentication on network 20, use the commands:

```
awplus# configure terminal
awplus(config)# wireless
awplus(config-wireless)# network 20
awplus(config-wireless-network)# captive-portal
awplus(config-wireless-network-cp)# redirect-url
http://www.mydomain.com/welcome
```

**Related commands**

captive-portal

enable (wireless-network-cp)

mac-auth password

mac-auth username

page-proxy-url

radius auth group (wireless-network-cp)

redirect-url

session-keep

mode (wireless-network-cp)

**Command changes** Version 5.4.9-1.1: command added

# rogue-ap-detection enable (wireless)

**Overview** Use this command to enable rogue application detection.

Use the **no** variant of this command to disable rogue application detection.

**Syntax**

```
rogue-ap-detection enable
no rogue-ap-detection enable
```

**Default** Disabled.

**Mode** Wireless Configuration

**Example** To enable rogue application detection, use the following commands:

```
awplus# configure terminal
awplus(config)# wireless
awplus(config-wireless)# rogue-ap-detection enable
```

**Related commands** show wireless

**Command changes** Version 5.4.7-2.4 command added.

# sc-profile

**Overview**

Use this command to add a Smart Connect profile configuration and enter the Smart Connect profile configuration mode.

Use the **no** variant of this command to remove a Smart Connect profile configuration.

**Syntax**

```
sc-profile <1-65535>
no sc-profile
```

| Parameter | Description |
|---|---|
| *<1-65535>* | The Smart Connect profile ID. |

**Default**

Not set

**Mode**

Wireless AP Profile Configuration

**Example**

To add Smart Connect profile 1 to AP profile 10, use the commands:

```
awplus# configure terminal
awplus(config)# wireless
awplus(config-wireless)# ap-profile 10
awplus(config-wireless-ap-prof)# sc-profile 1
```

**Related commands**

smart-connect-profile

show wireless ap-profile

show wireless network

**Command changes**

Version 5.5.0-0.1: command added

# sc-channel

**Overview** Use this command to set a fixed radio channel for an access point (AP) using Smart Connect.

Use the **no** variant of this command to delete this setting.

**Syntax**

```
sc-channel radio <1-3> channel {<channel-number>|auto}
no sc-channel
```

| Parameter | Description |
|---|---|
| *<1-3>* | Select the radio channel fixed for AWC-SC use |
| *<channel-number>* | Select the radio channel that is defined in the AP profile |
| `auto` | The radio channel is automatically selected |

**Default** Not set.

**Mode** Wireless Smart Connect Profile Configuration

**Example** To automatically configure the Smart Connect channel with AP profile 10, use the commands:

```
awplus# configure terminal
awplus(config)# wireless
awplus(config-wireless)# smart-connect-profile 10
awplus(config-wireless-sc-prof)# sc-channel radio 2 channel
auto
```

**Related commands**

smart-connect-profile

show wireless ap

show wireless ap-profile

**Command changes** Version 5.5.0-0.1: command added

# security (wireless)

**Overview** Use this command to configure a wireless security instance. If the instance doesn't already exist, then this command creates it.

Use the **no** variant of this command to remove a wireless security instance.

**Syntax**

```
security <1-65535> mode {wep|wpa-personal|wpa-enterprise}
no security <1-65535>
```

| Parameter | Description |
|---|---|
| *<1-65535>* | Wireless security instance identification number |
| `mode` | Security mode |
| `wep` | Security mode WEP. This assigns the configuration identifier to **config-wireless-sec-wep** mode and enters the mode. |
| `wpa-personal` | Security mode WPA-Personal. This assigns the configuration identifier to **config-wireless-sec-wpa-psnl** mode and enters the mode. |
| `wpa-enterprise` | Security mode WPA-Enterprise. This assigns the configuration identifier to **config-wireless-sec-wpa-ent** mode and enters the mode. |

**Default** Not set.

**Mode** Wireless Configuration

**Usage notes** You create a wireless security instance by designating a security instance ID and selecting a security mode. There are three types of security modes:

- WEP
- WPA-Personal
- WPA-Enterprise

**Example** To configure and enter the wireless security mode for WPA-Personal, use the following commands:

```
awplus# configure terminal
awplus(config)# wireless
awplus(config-wireless)# network 10 mode wpa-personal
awplus(config-wireless-sec-wpa-psnl)#
```

**Related commands**

wireless

security (wireless-network)

enable (wireless-sec-wep)

authentication (wireless-sec-wep)

type (wireless-sec-wep)

length (wireless-sec-wep)

index

**Command changes**

Version 5.4.7-2.4: command added

# security (wireless-network)

**Overview**

Use this command to designate a security configuration identifier for a wireless security configuration.

Use the **no** variant of this command to remove a security configuration identifier.

**Syntax**

```
security <1-65535>
no security
```

| Parameter | Description |
|---|---|
| *<1-65535>* | The wireless security configuration identifier. |

**Default**

Not set.

**Mode**

Wireless Network Configuration

**Example**

To assign a security configuration identifier of 10 to wireless network 2, use the following commands:

```
awplus# configure terminal
awplus(config)# wireless
awplus(config-wireless)# network 2
awplus(config-wireless-network)# security 10
```

**Related commands**

network (wireless)

show wireless network

**Command changes**

Version 5.4.7-2.4: command added.

# security (wireless-wds)

**Overview**

Use this command to set a wireless security configuration identifier to the WDS configuration mode.

Use the **no** variant of this command to remove the WDS security configuration identifier.

**Syntax**

```
security <1-65535>
no security
```

| Parameter | Description |
|---|---|
| *<1-65535>* | The wireless security configuration identifier. |

**Default**

Not set.

**Mode**

Wireless WDS Configuration

**Example**

To designate the wireless security configuration identifier to the WDS configuration, use the following commands:

```
awplus# configure terminal
awplus(config)# wireless
awplus(config-wireless)# wds 10
awplus(config-wireless-wds)# security 2
```

**Related commands**

wds

show wireless wds

**Command changes**

Version 5.4.7-2.4: command added

# service wireless

**Overview**

Use this command to enable wireless services.

Use the **no** version of the command to disable unused wireless services.

**Syntax**

```
service wireless
no service wireless
```

**Default**

Enabled

**Mode**

Global Configuration

**Usage notes**

On devices that support the wireless manage feature, sometimes it may be desirable to disable unused services, in order to reduce memory use. Disabling the wireless services will only take effect after you save the configuration and restart the device.

**Example**

To disable the wireless service, use the commands:

```
awplus# configure terminal
awplus(config)# no service wireless
```

**Output**

Figure 52-1: Example output from **no service wireless**

```
awplus(config)#no service wireless
% Save the config and restart the device for this change to take
effect
```

**Command changes**

Version 5.5.0-0.1: command added

# session-keep

**Overview**

Use this command to enable the session-keep feature. After successful authentication this feature redirects the web browser back to the originally requested URL. If both **session-keep** and redirect-url are enabled, session-keep takes precedence.

Use the **no** variant of this command to disable the session-keep feature.

**Syntax**

```
session-keep
no session-keep
```

**Default**

Not set by default.

**Mode**

Wireless Network Captive Portal Configuration

**Usage notes**

This setting is valid only for TQ4400, TQ4600, TQ4400e, TQ1402, TQ5403, TQ5403e, TQm1402, and TQm5403 APs. It has no effect on TQ2450, TQ3200, TQ3400, TQ3600 and MWS series APs.

**Example**

To configure session-keep for Captive Portal authentication on network 20, use the commands:

```
awplus# configure terminal
awplus(config)# wireless
awplus(config-wireless)# network 20
awplus(config-wireless-network)# captive-portal
awplus(config-wireless-network-cp)# session-keep
```

**Related commands**

captive-portal

enable (wireless-network-cp)

mac-auth password

mac-auth username

page-proxy-url

radius auth group (wireless-network-cp)

redirect-url

session-keep

mode (wireless-network-cp)

**Command changes**

Version 5.4.9-1.1: command added

# session-key-refresh-interval

**Overview** Use this command to set the refresh interval for the session key used in a WPA-enterprise security configuration.

Use the **no** variant of this command to set the refresh interval to the default.

**Syntax**

```
session-key-refresh-interval <0-86400>
no session-refresh-key-interval
```

| Parameter | Description |
|---|---|
| *<0-86400>* | The refresh interval in seconds. |

**Default** The default refresh interval is 0 seconds.

**Mode** Wireless Security WPA-enterprise Configuration

**Usage notes** This command is for TQ series devices only.

**Example** To set 7200 seconds as the session key refresh rate, use the following commands:

```
awplus# configure terminal
awplus(config)# wireless
awplus(config-wireless)# security 210 mode wpa-enterprise
awplus(config-wireless-sec-wep-ent)#
session-key-refresh-interval 7200
```

**Related commands** security (wireless)

**Command changes** Version 5.4.7-2.4: command added

# show debugging wireless

**Overview** Use this command to see what debugging is turned on for wireless management.

For information on filtering and saving command output, see the "Getting Started with AlliedWare Plus" Feature Overview and Configuration Guide.

**Syntax**

```
show debugging wireless
```

**Mode** User Exec and Privileged Exec

**Example**

```
awplus# show debugging wireless
```

**Output** Figure 52-2: Example output from the **show debugging wireless** command

```
awplus#show debugging wireless
 Wireless debugging is on
 Wireless all modules debugging is on
 Wireless warning level debugging is on
```

**Related commands** show wireless

# show wireless

**Overview** Use this command to show the overall status information for Autonomous Wave Control (AWC).

**Syntax**

```
show wireless
```

**Mode** Privileged Exec

**Example** To show the status of AWC on a device, use the command:

```
awplus# show wireless
```

**Output** Figure 52-3: Example output from **show wireless**

```
awplus> show wireless
Wireless Controller Mode ........ Enable
Management IP Address ........... 192.168.8.30
Emergency Mode .................. Activate
 Activated User ................. admin
 Activated Time ................. 2020-02-19 12:11:33
Rogue AP Detection .............. Enable
Log ............................. Enable
Log Destination ................. USB
Log Size Wireless Client ........ 5000
Log Rotate Wireless Client ...... 100
Log Rotate neighbor AP .......... 100
Log Interval neighbor AP ........ 60
```

**Related commands**

management address

enable (wireless)

rogue-ap-detection enable (wireless)

log enable destination

**Command changes** Version 5.4.7-2.4: command added.

# show wireless ap

**Overview** Use this command to display the configuration and status of wireless Access Points (APs).

**Syntax**

```
show wireless ap {<ap-id-range>|all} [brief|status|detail]
```

| Parameter | Description |
|---|---|
| *<ap-id-range>* | Display the configuration and status for a selected AP or range of APs, <1-65535>. |
| `all` | Display the configuration and status of APs. |
| `brief` | Display the brief configuration details of APs. |
| `status` | Display the status of APs. |
| `detail` | Display the detailed status and device information of APs. |

**Mode** Privileged Exec

**Example** To display the status and configuration of wireless APs, use the following commands:

```
awplus# show wireless ap
```

**Output** Figure 52-4: Example output from **show wireless ap**

```
awplus#show wireless ap
AP ID 1:
 Status ........................ Enable
 Description ................... TQ4400
 AP Profile .................... 3
 IP Address .................... 150.87.20.13
 MAC Address ................... 0000.5e00.5301
 Login Username ................ manager
 Login Password ................ friend
 Radio 1:
  Status ....................... Enable
  Channel ...................... 1,6,11
  Power ........................ 50
```

```
Radio 2:
  Status ....................... Enable
  Channel ...................... Auto
  Power ........................ AutoAP ID 2:
 Status ........................ Enable
 Description ................... TQ4200
 AP Profile .................... 20
 IP Address .................... 192.168.1.100
 MAC Address ................... 0000.5e00.5312
 Login Username ................ manager
 Login Password ................ friend
 Radio 1:
  Status ....................... Disable
  Channel ...................... auto
  Power ........................ auto
Radio 2:
  Status ....................... Enable
  Channel ...................... 48
  Power ........................ 60
AP ID 3:
 Status ........................ Enable
 Description ................... MWS600
 AP Profile .................... 100
 IP Address .................... 192.168.2.100
 MAC Address ................... 0000.5e00.5344
 Login Username ................ manager
 Login Password ................ friend Radio 1:
  Status ....................... Enable
  Channel ...................... 1,6,12
  Power ........................ 30
 Radio 2:
  Status ....................... Enable
  Channel ...................... 52
  Power ........................ 100
```

To display a brief (summary), use the following command:

```
awplus# show wireless ap brief
```

Figure 52-5: Example output from **show wireless brief**

```
awplus#show wireless ap brief
ID    Description Status  Prof  IP Address      MAC Address
----- ----------- ------- ----- --------------- --------------
    1 TQ4400      Enable      3 192.8.20.13     0000.5e00.5301
    2 TQ4200      Enable     20 192.168.1.
    2 MWS600      Enable    100 192.168.2.100   0000.5e00.5344

awplus#
 Legends:
 - ID          ... ID of Access Point entry
 - Model       ... Description of Access Point
 - Status      ... Status of AP configuration
 - IP Address  ... IP Address of Access Point
 - MAC Address ... MAC Address of Access Point
```

To display AP status, use the following command:

```
awplus# show wireless ap status
```

Figure 52-6: Example output from **show wireless ap status**

```
awplus#show wireless ap status
ID    Model        FW ver     Manage rup Config   c Clnt   Uptime
----- ------------ ---------- ---------- ---------- -------------
    1 AT-TQ3600    4.0.5.B99  Managd --- Succeed  -    0   363248
    2 AT-MWS2533AP V2.2.0 B07 Joined --- Failed   -    0        0
    3 AT-TQ3200    4.0.5.B01  Managd --- Succeed  -    0   363500

awplus#
 Legends:
 - ID     ... ID of Access Point entry
 - Model  ... Model name of Access Point
 - FW ver ... Firmware version of Access Point
 - Manage ... Management Status of Access Point
                 Managd: Managed
                 Discvd: Discovered
                 Joined: Joinded
                 Failed: Failed
                 Reboot: Rebooting
                 Update: Updating
 - r      ... Reboot Status
                 R: Requested
                 *: Rebooting
                 S: Succeeded
                 F: Failed
 - u      ... Update Status
                 R: Requested
                 *: Upgrading
                 S: Succeeded
                 F: Failed
 - p      ... Power-Channel Status
                 R: Requested
                 S: Succeeded
                 F: Failed
 - Config ... Configuration Status
                 NotConfg: Not Configured
                 InProgrs: In Progress
                 Succeed : Succeeded
                 Failed  : Failed
                 Unknown : Unknown
 - c      ... Configuration Apply Status
                 R: Requested
                 A: Applying
                 S: Succeeded
                 F: Failed
 - Clnt   ... Number of connected clients
 - Uptime ... Uptime in seconds
```

To display AP detail, use the following command:

```
awplus# show wireless ap detail
```

Figure 52-7: Example output from **show wireless ap detail**

```
awplus#show wireless ap detail
AP ID 1:
 Description ..................
 AP Profile ................... 1
 IP Address ................... 192.168.1.231
 MAC Address .................. 001a.eb95.1880
 Model ........................ AT-TQ3600
 Serial ....................... TQ3600G23EF608J
 Firmware Version ............. 4.0.5.B99
 Management Status ............ Joined
 Configuration Status ......... In Progress (Modified)
 Crash Log Status ............. -
 Clients....................... 0
 Sysup time.................... 0
 Operational Status:
  Reboot Status ................ -
  Firmware Upgrade Status ...... -
  Configuration Apply Status .... -
  Auto Channel Power Status ..... -

AP ID 3:
 Description ..................
 AP Profile ................... 3
 IP Address ................... 192.168.1.232
 MAC Address .................. 001a.ebbd.e240
 Model ........................ AT-TQ3200
 Serial ....................... 000171R172200024A2
 Firmware Version ............. 4.0.5.B01
 Management Status ............ Managed
 Configuration Status ......... Succeeded (Latest)
 Crash Log Status ............. -
 Clients....................... 0
 Sysup time.................... 0
 Operational Status:
  Reboot Status ................ -
  Firmware Upgrade Status ...... -
  Configuration Apply Status .... -
  Auto Channel Power Status ..... -
```

**Related commands**

enable (wireless-ap)

ap-profile (wireless)

description (wireless-ap)

ip-address (wireless-ap)

radio (wireless-ap-profile)

channels (wireless-ap-prof-radio)

login username (wireless-ap)

login-password (wireless-ap)

wds radio (wireless-ap)

description (wireless-ap)

**Command changes** Version 5.4.7-2.4: command added.

# show wireless ap capability

**Overview** Use this command to display the configured specifications of a supported wireless Access Point (AP).

**Syntax**

```
show wireless ap capability
show wireless ap capability hwtype <modelname>
show wireless ap capability hwtype {tq|mws}
[single|dual|triple] [spec {11ac|11n}] [radio {1|2|3}] [country
<country-code>]
```

| Parameter | Description |
|---|---|
| hwtype | To specify the display of a hardware type. When omitted, all hardware types will be displayed. |
| *<modelname>* | The model name of the wireless AP capabilities to be displayed. See hwtype for a full list of model names. |
| tq | Display hardware type AT-TQ series only. |
| mws | Display hardware type AT-MWS series only. |
| single | Display a single radio interface. |
| dual | Display a dual radio interface. |
| spec | To specify the display of an IEEE wireless networking standard mode. When omitted, all modes are displayed. |
| 11ac | Display information for the 802.11ac mode only. |
| 11n | Display information for the 802.11n mode only. |
| radio | To specify a radio bandwidth. When omitted, all radio bandwidths are displayed. |
| 1 | Display information for radio bandwidth 2.4GHz only. |
| 2 | Display information for radio 2 bandwidth 5GHz only. |
| 3 | Display information for radio 3 bandwidth 5GHz only. |
| country | To specify the display for a country. When omitted, the default country will be displayed. |
| *<country-code>* | Display the specified country code. The default country code is 'jp' for Japan or 'us' for other regions. |

**Mode** User Exec and Privileged Exec

**Output** Figure 52-8: Example output from **show wireless ap capability**

```
awplus#show wireless ap capability
Country: jp
Hwtype Radios Spec Band Radio Mode     Bandwidths
------ ------ ---- ---- ----- -------- ----------
tq     dual   11ac -    1     bg       20
                            *bg-n     20, 40
                             n-only-g 20, 40
                       2     a        20
                            *a-n-ac   20, 40, 80
                             n-ac     20, 40, 80
              11n  -    1     bg       20
                            *bg-n     20, 40
                             n-only-g 20, 40
                       2     a        20
                            *a-n      20, 40
                             n-only-a 20, 40
       single 11n  2    1     bg       20
                            *bg-n     20, 40
                             n-only-g 20, 4
                    5    1     a        20
                            *a-n      20, 40
                             n-only-a 20, 40
mws    dual   11ac -    1     bg       20
                            *bg-n     20, 40
                             n-only-g 20, 40
                       2     a        20
                            *n-ac     20, 40, 80
              11n  -    1     bg       20
                            *bg-n     20, 40
                             n-only-g 20, 40
                       2     a        20
                            *a-n      20, 40
                             n-only-a 20, 40
* means default configuration
```

**Related commands**

country-code

show wireless country-code

hwtype

**Command changes**

Version 5.4.7-2.4: command added.

Version 5.4.9-1.1: <*modelname*> parameter added.

# show wireless ap client

**Overview** Use this command to display the client information on a managed wireless Access Point (AP).

**Syntax**

```
show wireless ap [<ap-id-range>] client [radio <1-3>]
```

| Parameter | Description |
|---|---|
| *<ap-id-range>* | Display information for the selected Access Point, or range <1-65535>. |
| `radio` | Select a radio interface on the AP. |
| *<1-3>* | Radio interface number. |

**Mode** User Exec and Privileged Exec

**Example** To display the wireless AP client settings, use the following commands:

```
awplus# show wireless ap client
```

**Output** Figure 52-9: Example output from **show wireless ap client**

```
awplus#show wireless ap client
IP Address      Mac Address    AP  SSID        Radio Ch Signal Age
--------------- -------------- --- ----------- ----- -- ------ --------------
192.168.10.100  1234.abcd.5678 1   4z9FbaEh2Vr 2     36 58     00d:00h:05m:21s
192.168.10.103  1234.abef.9876 3   prTnO44aN7H 1     12 11     05d:15h:13m:40s
```

**Related commands** radio (wireless-ap)

**Command changes** Version 5.4.7-2.4: command added

# show wireless ap neighbors

**Overview** Use this command to display the neighboring wireless Access Points (APs) connected to a radio or range of radios. If no parameters are specified, then all configurations are displayed.

**Syntax**

```
show wireless ap [<ap-id-range>|all] neighbors [radio <1-3>]
```

| Parameter | Description |
|---|---|
| *<ap-id-range>* | Show the radio and wireless neighbors associated with an AP or range of APs. To select a range, use the range format <1-65535>. |
| `all` | Display the radio and neighbors for all APs. |
| `radio` | Display the configured radio. |
| *<1-3>* | Radio interface number. |

**Mode** User Exec and Privileged Exec

**Usage notes** If the total number of AP neighbors in the system exceeds 12500, this command will only show the first 12500 neighbors. You can specify the AP ID to see all neighbors of each AP.

**Example** To display all wireless AP neighbors, use the following command:

```
awplus# show wireless ap neighbors
```

**Output** Figure 52-10: Example output from **show wireless ap neighbors**

```
awplus#show wireless ap neighbors
BSSID          ESSID                      R Ch  Sig AP    Detected
-------------- ------------------------- - --- --- ----- -------------------
001a.ebab.ced0 meeting-space1             2 124  19     1 2017-09-07 07:27:11
001a.ebab.ced2 meeting-space2             2 124  19     1 2017-09-07 07:27:11
5001.d93a.e654 office                     2 116  12     1 2017-09-07 07:25:08
1234.5610.0270 guest                      2 124   9     1 2017-09-07 07:25:14
001a.eb84.5750 Demo                       2 140  14     1 2017-09-07 07:10:08
001a.eb71.9594 Web                        2  48  25     1 2017-09-07 06:55:06
001a.eb71.9595 test1                      2  48  26     1 2017-09-07 06:55:06
104b.4683.46b7 test2                      2  52   8     1 2017-09-07 06:37:03
001a.ebbe.d3b0 test3                      2  36  66     1 2017-09-07 06:33:02
```

**Related commands** radio (wireless-ap)

**Command changes** Version 5.4.7-2.4: command added.

Version 5.4.8-1.1: display limited to 12500 neighbors

# show wireless ap power-channel

**Overview** Use this command to display the currently configured status of an Access Point (AP) power-channel. If the command parameters are omitted, then the status for all APs will display.

**Syntax**

```
show wireless ap [<ap-id-range>|all] power-channel
```

| Parameter | Description |
|---|---|
| *<ap-id-range>* | Display the current power-channel status for a selected AP or range of APs in the format <1-65535> |
| `all` | Display the current power-channel status for all APs. |

**Mode** User Exec and Privileged Exec

**Example** To display the currently configured power-channel status for APs, use the command:

```
awplus# show wireless ap power-channel
```

**Output** Figure 52-11: Example output from **show wireless ap power-channel**

```
awplus#show wireless ap power-channel
AP    MAC address    Radio1        Radio2
----- -------------- ------------- -------------
1   001a.ebbc.0200   Ch:120 (100%) -
```

**Related commands**

type power-channel ap all

wireless power-channel ap all

show wireless power-channel calculate

**Command changes** Version 5.4.7-2.4: command added.

# show wireless ap-profile

**Overview** Use this command to display the AP-profile configuration for Autonomous Wave Control.

**Syntax** `show wireless ap-profile [<ap-profile-id-range>] [brief]`

| Parameter | Description |
|---|---|
| *<ap-profile-id-range>* | Displays the AP-profile information for an ID range. The ID range is <1-65535>. |
| `brief` | Displays a brief summary of AP-profile configuration. |

**Mode** User Exec and Privileged Exec

**Output** Figure 52-12: Example output from **show wireless ap-profile brief**

```
awplus#show wireless ap-profile brief

ID    Description       HWTYPE         Radio 1  Radio 2  Radio 3
----- ----------------  -------------- -------  -------  -------
1     TQ3200            tq-single-11n  Disable  Enable   Disable
2     TQ4400e_out       tq-dual-11ac   Enable   Enable   Disable
3     MWS1750           mws-dual-11ac  Disable  Disable  Disable
4     TQ5403e           AT-TQ5403e     Enable   Enable   Enable
```

**Output** Figure 52-13: Example output from **show wireless ap-profile**

```
awplus#show wireless ap-profile

AP-PROFILE ID 1:
 Description ................... TQ5403
 Country-Code .................. JP
 HWTYPE ........................ TQ
  Band........................... Triple
  Spec .......................... 11ac
 Band .......................... 5GHz
 NTP Server .................... 192.168.1.100
 NTP Server Period.............. 30
 SNMP .......................... Enable
  Version ...................... v1v2c
  Port ......................... 161
  Read-only community string ... public
  Trap community string ........ private
  Permit host .................. 192.168.1.1/24
  Trap host(s):
   Host 1 ...................... 192.168.1.10
   Host 2 ...................... manager.your.domain.com
  Generated Traps:
   Cold Start Traps ............ Enabled
   Link Traps .................. Enabled
   Authentication Traps ........ Enabled
   Association Traps ........... Disabled
   Filtered STA Traps .......... Disabled
   Radius Auth Success Traps ... Disabled
   Radius Auth Failure Traps ... Disabled
   DFS Traps ................... Disabled
 LED ........................... Enable
 Initialization-button ......... Enable
 Port-Cascade .................. Enable
 Link-Aggregation .............. Disable
 Wireless MAC filter ........... 10
  Rule ....................... Permit
 Captive Portal
  Virtual IP Adress ............ 192.168.100.100
 Channel-Blanket
  Control VLAN ................. 100
  Key .......................... a4kPHrm-3mA$a.9s
  Bcast Key Refresh Interval ... 0
  Station Isolation ............ Disable
  Delegate AP .................. 1
  CB Channel
   Radio 1 ..................... 1
   Radio 2 ..................... 36
   Radio 3 .....................
 Smart Connect Profile ......... 10
```

```
awplus#show wireless ap-profile

Radio 1:
  Status ....................... Enable
  Mode ......................... bg-n
  Bandwidth ...................
  Station-Isolation ............ Disable
  Airtime-Fairness ............. Disable
  Max-Clients .................. 200
  Channel ...................... 1-13
  VAP .......................... 0
   Network ..................... 9
   Channel Blanket ............. Yes
    BSSID ...................... 00:1a:eb:6a:22:b3
   Smart Connect ............... Yes
Radio 2:
  Status ....................... Enable
  Mode ......................... a-n
  Bandwidth .................... 40
  Station-Isolation ............ Disable
  Airtime-Fairness ............. Disable
  Max-Clients .................. 20
  Channel ...................... 34,38,42,46
  VAP .......................... 0
   Network ..................... 10
   Channel Blanket ............. No
   Smart Connect ............... No
  VAP .......................... 2
   Network ..................... 20
   Channel Blanket ............. No
   Smart Connect ............... No
```

**Related commands**

ap-profile (wireless)

description (wireless-ap-prof)

country-code

hwtype

band

outdoor

ntp designated-server

led enable

initialization-button enable

radio (wireless-ap-profile)

captive-portal virtual-ip

**Command changes**

Version 5.4.7-2.4: command added

# show wireless auto-config

**Overview** Use this command to display operational status for automatically configured wireless networks, profiles and APs.

**Syntax** `show wireless auto-config`

**Mode** Privileged Exec

**Example** To display current information about an automatic configuration session, use the command:

```
awplus# show wireless auto-config
```

**Output** Figure 52-14: Example output from **show wireless auto-config**

```
awplus#show wireless auto-config
Last Time executed: 2018-2-26 13:05:26
Last Time updated: 2018-2-26 13:07:33
AP-Profile: 10
Country-code: Not set
Status: Creating configuration

IP Address        MAC Address     Hwtype          AP    Prof   Status
---------------- --------------- -------------- ----- ------ --------
192.168.120.117  0067.5ebb.92c4  tq-single-11n  -     -      NoMatch
192.168.120.113  0067.5e00.5301  tq-dual-11ac   -     -      Collected
192.168.120.133  0067.5e42.a451  tq-dual-11ac   20    10     Modify
192.168.120.121  0067.5e20.ac94  tq-dual-11ac   -     -      Collected
192.168.120.115  0067.5eac.606f  tq-dual-11ac   -     -      Awaiting
```

Table 52-1: Parameters in the output from **command name**

| Parameter | Description |
|---|---|
| `Last Time executed` | The time that the wireless automatic configuration was last executed. |
| `Last Time updated` | The time that any AP status was last updated. |
| `auto-config Time-out` | The time that an automatic configuration session timed out. If the wireless controller completed a session before timing out, then it will show this time. |
| `AP-Profile` | Specified AP Profile ID for new configurations, or new profile ID of an automatically created one. |
| `Country-code` | This is a specified two letter code representing the country for the AP profile. If no country is specified then it appears as “Not set”. |

Table 52-1: Parameters in the output from **command name** (cont.)

| Parameter | Description |
|---|---|
| `Status` | **Initialized:**<br>Wireless automatic discovery of AP list started.<br>**In Progress:**<br>Discovery AP list achieved, now collecting data and creating configuration.<br>**IP Modifying:**<br>Modifying IP address after creating another configuration (this status is brief in time).<br>**Completed:**<br>All configuration is finished successfully.<br>**Aborted:**<br>Automatic configuration process was stopped using the command **wireless auto-config abort**.<br>**Failed:**<br>Wireless automatic configuration failed, for example "Failed to set profile to discovered AP". |
| `IP Address` | Discovered wireless access point IP address. |
| `MAC Address` | Discovered wireless access point MAC address. |
| `Hwtype` | Discovered wireless access point hardware type. |
| AP | AP configuration for discovered wireless access points. |
| `Prof` | AP profile that attach to discovered wireless access points. |
| `Status` | Discovered wireless access points status:<br>**Awaiting:**<br>Waiting for completion of collecting the data.<br>**Modify:**<br>AP MAC address already exists. It will modify the IP address.<br>**Skip:**<br>Already configured AP MAC address and IP address, so will do nothing.<br>**Done:**<br>Successful retrieval of hardware type (model name) and configuration created.<br>**NoMatch:**<br>hardware type of specified AP profile did not match.<br>**NoResp:**<br>Centralized Wireless Manager (CWM) Agent(AP) did not respond.<br>**Failed:**<br>Failed to create configuration, for example "failed to create network %d". |

**Related commands**

wireless auto-config

**Command changes** Version 5.4.8-1.1: command added

# show wireless captive-portal network walled-garden

**Overview** Use this command to display wireless network walled garden entries for Captive Portal.

**Syntax**

```
show wireless captive-portal {<network-ID>|all} walled-garden
```

| Parameter | Description |
|---|---|
| *<network-ID>* | Display output for the specified wireless network ID or range of network IDs, valid network IDs are <1- 65535>. |
| `all` | Display all wireless network walled garden entries. |

**Mode** Privileged Exec

**Example** To display the walled garden entries for Captive Portal on network 5, use the commands:

```
awplus# show wireless captive-portal network 5 walled-garden
```

**Output** Figure 52-15: Example output from **show wireless captive-portal network 5 walled-garden**

```
awplus#show wireless captive-portal network 5 walled-garden
WALLED GARDEN LIST FOR NETWORK ID 5:
 Entries ....................... 3
    Walled Garden
    -----------------------------
    example.com
    1.1.1.1
    1.1.1.0/24
```

**Related commands** captive-portal virtual-ip

walled-garden entry

**Command changes** Version 5.5.0-1.3: command added

# show wireless channel-blanket ap status

**Overview** Use this command to display the channel blanket status for a single or range of wireless APs. An AP whose AP ID is displayed as "-" is an AP that is not part of an AWC Lite configuration. If an AP ID (or range) is not selected, then the status of all APs will be displayed.

**Syntax**

```
show wireless channel-blanket ap {<ap-idrange> | all} status
```

| Parameter | Description |
|---|---|
| *<ap-idrange>* | The AP ID, or range of IDs <1-65535>. |
| `all` | Display the channel blanket status of all APs |

**Mode** Privileged Exec

**Example** To display the wireless channel blanket status for AP 100, use the command:

```
awplus# show wireless channel-blanket ap 100 status
```

**Output** Figure 52-16: Example output from **show wireless channel-blanket ap status**

```
awplus#show wireless channel-blanket ap 100 status
 AP: 100
 Last Update Time: 2018-10-04 01:33:33
 Number of CB member: 5
  AP    MAC Address
  ----- -----------------
  11    001a.eb12.3456
  12    001a.eb12.3457
  13    001a.eb12.3458
  14    001a.eb12.3459
  -     001a.eb12.3460
```

**Related commands** ap

channel-blanket

**Command changes** Version 5.4.9-1.1: command added

# show wireless channel-blanket ap-profile status

**Overview** Use this command to display the channel blanket status of AP profiles. The command displays the number of channel blanket APs configured and visible from each AP to which the profile is assigned. An AP whose member is displayed as "-" is an AP that is not part of the channel blanket. If an AP Profile (or range) is not selected, then all APs profiles will be displayed.

**Syntax**

```
show wireless channel-blanket ap-profile {<profile-id> | all}
status
```

| Parameter | Description |
|---|---|
| *<profile-id>* | The AP Profile ID, or range of IDs <1-65535>. |
| `all` | Display the status of all APs in the AP profile. |

**Mode** Privileged Exec

**Example** To display the wireless channel blanket status for APs belonging to AP profile 100, use the following command:

```
awplus# show wireless channel-blanket ap-profile 100 status
```

**Output** Figure 52-17: Example output from **show wireless channel-blanket ap-profile**

```
awplus#show wireless channel-blanket ap-profile 100 status
AP Profile: 100
 AP    Member TimeStamp
 ----- ------ -------------------
 11    4      2018-10-04 01:33:33
 12    4      2018-10-04 01:33:29
 13    4      2018-10-04 01:18:20
 14    4      2018-10-04 01:19:01
 15    1      2018-10-03 12:46:26
 16    -
```

**Related commands** ap-profile (wireless-ap)

channel-blanket

**Command changes** Version 5.4.9-1.1: command added

# show wireless country-code

**Overview** Use this command to display a list of country codes that can be used on an Access Point (AP) Autonomous Wave Control (AWC) configuration.

**Syntax**

```
show wireless county-code
```

**Mode** User Exec and Privileged Exec

**Example** To display the list of AWC country codes, use the command:

```
awplus# show wireless country-code
```

**Output** Figure 52-18: Example output extract from **show wireless country-code**

```
awplus#show wireless country-code
Code  Country
----  --------------------------------
AD    Andorra
AE    United Arab Emirates
AF    Afghanistan
AG    Antigua and Barbuda
AI    Anguilla
AL    Albania
AM    Armenia
AN    Netherlands Antilles
AO    Angola
AR    Argentina
AS    American Somoa
AT    Austria
AU    Australia
AW    Aruba
AZ    Azerbaijan
......
```

**Related commands** show wireless ap capability

country-code

**Command changes** Version 5.4.7-2.4: command added.

# show wireless network

**Overview** Use this command to display the wireless network configuration for Autonomous Wave Control (AWC).

If you use the **brief** parameter, a summary of the configuration will be displayed, otherwise a detailed version is displayed.

**Syntax** `show wireless network <network-id-range> [brief]`

| Parameter | Description |
|---|---|
| *<network-id-range>* | Display the network configuration for a selected network ID or network ID range <1-65535>. |
| `brief` | Display a brief summary of the network configuration. |

**Mode** Privileged Exec

**Example** To display the full wireless network configuration for AWC, use the command:

```
awplus# show wireless network
```

**Output** Figure 52-19: Example output from **show wireless network brief**

```
awplus#show wireless network brief
ID    VLAN  SSID               H E  Sec ID MAC-Auth Web-Auth
----- ----  ----------------   ----- ----- -------- --------
1     1     Guest Network      Y Y     1          -        -
2     2     Default-2          - -     2          -        Y
3     10    Default-3          - -     3          -        Y
4     1     Default-4          - Y     4          -        -
5     1     Default-5          Y -     5          -        -
```

**Output** Figure 52-20: Example output from **show wireless network**

```
awplus#show wireless network
Network ID 1:
 Description ................... Guest Network 1
 Assigned VLAN ID .............. 20
 SSID .......................... w3antgihm92ssbp2
 Hide SSID ..................... Yes
 Emergency Mode ................ Enable
 Band-Steering ................. Disable
 Security ID ................... 2
  Security Mode ................ wpa-enterprisseNetwork ID 2:
 Description ................... Default-2
 Assigned VLAN ID .............. 10
 SSID .......................... Akk3nq0xpE42
```

```
MAC-Auth
 RADIUS group ................
 Username
  Separator ................... colon
  Character Case .............. upper-case
 Password .....................
RADIUS group for Web-Auth .....
Wireless MAC filter ........... Enable
Captive portal ................ Enable
 Mode ......................... click-through
 RADIUS group ................
 RADIUS Accounting............. Disable
 External Page URL ............
 Redirect URL .................
 Session keep ................. Enable
 Page proxy URL ...............
 Walled Garden Entries ........ 0
```

**Related commands**

network (wireless)

description (wireless-network)

vlan (wireless-network)

ssid (wireless-network)

band-steering (wireless-network)

external-page-url

walled-garden entry

radius accounting enable

**Command changes**

Version 5.4.7-2.4: command added.

# show wireless power-channel calculate

**Overview** Use this command to display the result of the optimal power per channel as calculated by Autonomous Wave Control (AWC).

Note: To see the currently assigned power per channel, use the command show wireless ap power-channel.

**Syntax**

```
show wireless power-channel calculate
```

**Mode** Privileged Exec

**Example** To display the optimal power for each channel as calculated by AWC, use the following command:

```
awplus# show wireless power-channel calculate
```

**Output** Figure 52-21: Example output from **show wireless power-channel calculate**

```
awplus#show wireless power-channel calculate

Latest Calculated Time: 2017-07-05 12:01:19
Latest Applied Time   : 2017-07-05 23:01:19AP
Radio1 ch Radio2 ch Radio1 PWR Radio2 PWR MAC address
----- --------- --------- ---------- ---------- --------------
1     4         -         80         -          1234.abcd.5678
2     1         52        50         66         1234.abef.9876
10    13        36        44         70         abcd.5678.1234
20    6         44        100        83         42d9.2a00.1ff4
```

**Related commands** type power-channel ap all

show wireless ap power-channel

**Command changes** Version 5.4.7-2.4: command added.

# show wireless sc-profile

**Overview** Use this command to display the Smart Connect profile configuration.

**Syntax** `show wireless sc-profile [<sc-profile-range>|all] [brief]`

| Parameter | Description |
|---|---|
| *<sc-profile-range>* | The Smart Connect profile ID or IDs to display. Select from the range 1-65535 |
| `all` | Display all Smart Connect profiles |
| `brief` | Display a brief summary of the Smart Connect profile configuration |

**Mode** Privileged Exec

**Example** To display all the Smart Connect profile information, use the command:

```
awplus# show wireless sc-profile all
```

**Output** Figure 52-22: Example output from **show wireless sc-profile all**

```
awplus#show wireless sc-profile all
SC-PROFILE ID 1:
 Description ................... SC PROFILE 01
 SSID .......................... SC-Profile-01-SSID
 Key ........................... a4kPHrm-3mA$a.9s
 Auto Discovery ................ Disabl
 Radio ......................... 1
  Channel ...................... 1
  DFS Channels ................. Exclude

SC-PROFILE ID 2:
 Description ................... SC PROFILE 02
 SSID .......................... SC-Profile-02-SSID
 Key ........................... a4kPHrm-3mA$a.9s
 Auto Discovery ................ Enable
 Radio ......................... 2
  Channel ...................... auto
  DFS Channels ................. Exclude
```

**Example** To display a brief summary of the Smart Connect profile information, use the command:

```
awplus# show wireless sc-profile all brief
```

**Output** Figure 52-23: Example output from **show wireless sc-profile all brief**

```
awplus#show wireless sc-profile all brief
ID    SSID                              Auto Discovery R Ch   DFS
----- --------------------------------- -------------- - ---- ---
    1 SC-Profile-01-SSID                Disable        1    1 Exc
    2 SC-Profile-02-SSID                Enable         2 auto Exc
```

**Related commands**

description (wireless-sc-prof)

ssid (wireless-sc-prof)

key (wireless-sc-prof)

auto-discovery disable

sc-channel

sc-profile

**Command changes** Version 5.5.0-0.1: command added

# show wireless security

**Overview** Use this command to display the Autonomous Wave Control (AWC) security configuration. If the **brief** parameter is specified, then a summary of the configuration is displayed, otherwise the detailed configuration is displayed.

**Syntax**

```
show wireless security [<security-id-range>] [brief]
```

| Parameter | Description |
|---|---|
| *<security-id-range>* | Display the security configuration for a specified ID range. Specify the ID range using the format <1-65535> |
| `brief` | Display the brief summary of the security configuration. |

**Mode** Privileged Exec

**Examples** To display a detailed AWC security configuration, use the following command:

```
awplus# show wireless security
```

**Output** Figure 52-24: Example output from **show wireless security**

```
awplus# show wireless security
Security ID 1:
 Security Mode ................. wpa-personal
 Key ........................... abcdetgh
 Versions ...................... wpa wpa2
 Ciphers ....................... ccmp tkip
 Bcast Key Refresh Interval .... 0
 Management Frame Protection ... Enable
 Fast Roaming
  Fast Transition ............... Disable
  Over-the-DS ................... Disable
  Mobility Domain ............... a1b2
  RMK-R0 Key Lifetime    ....... 10000
  Reassociation Deadline ....... 1000
  AES Key ......................
  Radio Resource Management .... Disable
  Wireless Network Management .. Disable
...
```

To display a brief (summary) AWC security configuration, use the following command:

```
awplus# show wireless security brief
```

```
awplus# show wireless security brief
ID    Mode     Status  Assigned Network Assigned WDS
----- -------- ------- ---------------- ------------
1     wep      Enable  11,13,14,25,40.. 65535
2     wpa-psnl Enable  22-24            2
3     wpa-ent  Disable -                -
4     web      Enable  -                -
5     mac      Enable  -                -
```

**Related commands**

security (wireless-network)

**Command changes**

Version 5.4.7-2.4: command added.

# show wireless smart-connect ap

**Overview** Use this command to display AP connection status for Smart Connect.

**Syntax**

```
show wireless smart-connect ap [<sc-ap-range>|all] status
```

| Parameter | Description |
|---|---|
| *<sc-ap-range>* | Display the connection status for a single Smart Connect AP or range of APs. Select from ID range 1-65535. |
| `all` | Display the connection status for all Smart Connect APs. |

**Mode** Privileged Exec

**Output** Figure 52-25: Example output from **show wireless smart-connect ap all status**

```
awplus#show wireless smart-connect ap all status
SC-PROFILE ID: 1
Last Update Time: 2019-12-12 11:14:35
Number of Smart Connect member: 1
AP    MAC Address         VAP Rx  VAP Tx  STA Rx  STA Tx (KB/sec)
----- ------------------- ------- ------- ------- -------
    1 * 0000.5e00.5301        1.3     2.2     0.0     0.0
    2 |- 0000.5e00.5302       0.0     0.0     0.5     0.7
    3 |- 0000.5e00.5303       0.0     0.0     0.5     0.6
```

**Related commands** smart-connect-profile

sc-profile

**Command changes** Version 5.5.0-0.1: command added

# show wireless task

**Overview** Use this command to display the tasks associated with Autonomous Wave Control (AWC).

**Syntax**

```
show wireless task [<task-id-range>] [brief|status]
```

| Parameter | Description |
|---|---|
| *<task-id-range>* | Display the task information for a specific task ID or ID range. |
| `brief` | Display the task information in summary format. |
| `status` | Display the task status information. For example the date and time that the task will be performed next. |

**Mode** User Exec and Privileged Exec

**Usage notes** An AWC task is a periodic or scheduled action to be taken, such as applying a configuration to an Access Point (AP) on a specified date, or calculating optimal AP power-channel usage and applying the results to all APs. See the **task** command for more details.

**Example** To display the configured AWC tasks in detail, use the command:

```
awplus# show wireless task
```

**Output** Figure 52-26: Example output from **show wireless task**

```
awplus# show wireless task
Task ID 1: Enable
 Description ................... task1
 Time .......................... 10:00
 Day ........................... Sun,Wed,Sat
 Type .......................... Download
  AP ........................... 2-5
  URL ........................... http://allied-telesis.co.jp/hogehoge.img

Task ID 2: Enable
Description ................... task2
Time .......................... 9:00
Day ........................... Sun
Type .......................... AP Configuration Apply
 AP ........................... 3,4Task ID 3: Enable
Description ................... task3
Time .......................... 12:00
Day ........................... every day
Type .......................... Power Channel-Calculate
 AP ........................... AllTask ID 4: Enable
Description ................... task4
Time .......................... 04:00
Day ........................... Sat
Type .......................... Power Channel-Apply
 AP ........................... All
```

Figure 52-27: Example output from **show wireless task brief**

```
awplus# show wireless task brief
ID    Description       Day    Time  Type           AP
----- ---------------- ------- ----- -------------- -------
1     task1            S--W--S 10:00 download       2-5
2     task2            S------ 09:00 ap conf apply  3,7
3     task3            SMTWTFS 12:00 pwrchnl-calc   All
4     task4            ------S 04:00 pwrchnl-apply  All
```

Figure 52-28: Example output from **show wireless task status**

```
awplus# show wireless task status
Task ID 1: Enable
 Description ................... task1
 Applied AP .................... 2-5
 Schedule
  Day ........................... Sun,Wed,Sat
  Time .......................... 10:00
 Next Time ..................... 2017-07-09 10:00:00
 Last Time .....................Task ID 2: Enable
 Description ................... task2
 Applied AP .................... 3,4
 Schedule
  Day ........................... Sun
  Time .......................... 09:00
 Next Time ..................... 2017-07-09 09:00:00
 Last Time .....................Task ID 3: Enable
 Description ................... task3
 Applied AP .................... All
 Schedule
  Day ........................... every day
  Time .......................... 12:00
 Next Time ..................... 2017-07-06 12:00:00
 Last Time ..................... 2017-07-05 12:01:19Task ID 4:
Enable
 Description ................... task4
 Applied AP .................... All
 Schedule
  Day ........................... Sat
  Time .......................... 04:00
 Next Time ..................... 2017-07-08 04:00:00
 Last Time .....................
```

**Related commands**

wds

enable (wireless-task)

description (wireless-task)

day (wireless-task)

time (wireless-task)

type download ap (wireless-task)

type power-channel ap all

**Command changes**

Version 5.4.7-2.4: command added.

# show wireless wds

**Overview** Use this command to display the configuration of a Wireless Distribution System (WDS) with Autonomous Wave Control. A WDS enables the wireless interconnection of Access Points (APs) or Peers in an IEEE802.11 network.

**Syntax** `show wireless wds [<wds-id-range>][brief]`

| Parameter | Description |
|---|---|
| *<wds-id-range>* | Display the configured information for a specified ID or a range of IDs. To display a range of WDS IDs, use the format <1-65535>. |
| `brief` | Display a brief summary of the WDS configuration. |

**Mode** User Exec and Privileged Exec

**Example** To display the full detail of a WDS configuration for a wireless network, use the following command:

```
awplus# show wireless wds
```

**Output** Figure 52-29: Example output from **show wireless wds**

```
awplus#show wireless wds
WDS ID 1: Enable
 Peer 1st AP ................... 10
      2nd AP ................... 11
 Security ...................... 100

WDS ID 2: Enable
 Peer AP1 ...................... 20
      AP2 ...................... abcd.1234.6789
 Security ...................... 100

WDS ID 3: Disable
Peer AP1 ...................... 30
     AP2 ...................... 16
Security ...................... 200
```

Figure 52-30: Example output from **show wireless wds brief**

```
awplus# show wireless wds brief
ID    Status  Peer 1st AP    Peer 2nd AP    Security
----- ------- -------------- -------------- --------
1     Enable  10             11             100
2     Enable  20             abcd.1234.6789 100
3     Disable 30             16             200
```

**Related commands**

wds

enable (wireless-wds)

peer (wireless-wds)

security (wireless-wds)

**Command changes**

Version 5.4.7-2.4 command added.

# show wireless wireless-mac-filter

**Overview** Use this command to display the wireless MAC filter configuration for Autonomous Wave Control.

**Syntax**

```
show wireless wireless-mac-filter [<mac-filter-range>|all]
[brief]
```

| Parameter | Description |
|---|---|
| *<mac-filter-range>* | <1-65535><br>Display the information for a specified ID or range of IDs. |
| `all` | Display the information for all MAC filters. |
| `brief` | Display a brief summary of the information |

**Mode** Privileged Exec

**Output** Figure 52-31: Example output from **show wireless-mac-filter**

```
awplus#show wireless wireless-mac-filter

WIRELESS MAC FILTER ID 100:
  Description .................. Floor 1
  Entries ...................... 3
  Entries ...................... 2
    MAC address    Description
    -------------- ---------------
    1234.5678.abcd PC lab 1
    0987.6543.abcd guest
    abcd.9876.5432

WIRELESS MAC FILTER ID 200:
  Description ..................
  Entries ...................... 0
```

**Related commands**

description (wireless-mac-flt)

filter-entry

show wireless ap-profile

wireless export

wireless import

wireless-mac-filter (wireless)

wireless-mac-filter (wireless-ap-prof)

wireless-mac-filter enable

**Command changes** Version 5.4.8-2.1: command added

# smart-connect-profile

**Overview**

Use this command to create a Smart Connect profile and enter the Smart Connect profile configuration mode.

Use the **no** variant of this command to delete a Smart Connect profile from the wireless configuration.

**Syntax**

```
smart-connect-profile <1-65535>
no smart-connect-profile <1-65535>
```

| Parameter | Description |
|---|---|
| *<1-65535>* | The Smart Connect profile ID |

**Default**

Not set

**Mode**

Wireless Configuration

**Example**

To configure Smart Connect profile 10 and enter the Smart Connect profile configuration mode, use the commands:

```
awplus# configure terminal
awplus(config)# wireless
awplus(config-wireless)# smart-connect-profile 10
awplus(config-wireless-sc-prof)#
```

To delete Smart Connect profile 10, use the commands:

```
awplus# configure terminal
awplus(config)# wireless
awplus(config-wireless)# no smart-connect-profile 10
```

**Related commands**

show wireless ap-profile

wireless

smart-connect-profile

auto-discovery disable

show wireless ap-profile

description (wireless-sc-prof)

ssid (wireless-sc-prof)

key (wireless-sc-prof)

**Command changes**

Version 5.5.0-0.1: command added

# snmp (wireless-ap-prof)

**Overview**

Use this command to enter SNMP configuration mode so you can add an SNMP configuration.

Use the **no** variant of this command to reset the SNMP parameters back to the default (not set).

**Syntax**

```
snmp
no snmp
```

**Default**

Not set

**Mode**

Wireless AP Profile Configuration

**Example**

To enter the SNMP configuration mode of AP profile 2, use the commands:

```
awplus# configure terminal
awplus(config)# wireless
awplus(config-wireless)# ap-profile 2
awplus(config-wireless-ap-prof)# snmp
awplus(config-wireless-ap-prof-snmp)#
```

To disable SNMP, use the commands:

```
awplus# configure terminal
awplus(config)# wireless
awplus(config-wireless)# ap-profile 2
awplus(config-wireless-ap-prof)# no snmp
awplus(config-wireless-ap-prof)#
```

**Related commands**

community read-only (wireless-ap-prof-snmp)

community trap (wireless-ap-prof-snmp)

permit host (wireless-ap-prof-snmp)

username (wireless-ap-prof-snmp)

show wireless ap-profile

version (wireless-ap-prof-snmp)

**Command changes**

Version 5.5.0-2.1: command added

# ssid (wireless-network)

**Overview**

Use this command to configure the SSID (Service Set Identifier) for the wireless network.

**Syntax**

```
ssid <value>
```

| Parameter | Description |
|---|---|
| *<value>* | The unique alphanumeric description or name of the SSID. The maximum character length is 32. |

**Default**

Default- {NETWORKID}.

Except for the default Guest Network, the default SSID for each network is 'Default-' followed by the unique Network ID.

**Mode**

Wireless Network Configuration

**Usage notes**

A network must be configured with an SSID of one or more alphanumeric characters. The SSID can be modified, but cannot be deleted.

**Example**

To configure a SSID name for a wireless network, use the following commands:

```
awplus# configure terminal
awplus(config)# wireless
awplus(config-wireless)# network 20
awplus(config-wireless-network)# ssid GUEST_NETWORK_1
```

**Related commands**

network (wireless)

show wireless network

**Command changes**

Version 5.4.7-2.4: command added.

# ssid (wireless-sc-prof)

**Overview**

Use this command to set the SSID used for wireless communication between APs in a Smart Connect network.

Use the **no** variant of this command to remove the SSID from a Smart Connect profile.

**Syntax**

```
ssid <ssid-value>
no ssid
```

| Parameter | Description |
|---|---|
| *<ssid-value>* | The SSID for the Smart Connect network. Enter a string up to 32 characters in length. |

**Default**

Not set

**Mode**

Wireless Smart Connect Profile Configuration

**Example**

To set the SSID ID of 10 used for wireless communication between APs in Smart Connect network 20, use the commands:

```
awplus# configure terminal
awplus(config)# wireless
awplus(config-wireless)# smart-connect-profile 20
awplus(config-wireless-sc-prof)# ssid SC-NETWORK-10
```

**Related commands**

sc-profile

show wireless ap-profile

show wireless network

**Command changes**

Version 5.5.0-0.1: command added

# station-isolation enable

**Overview**

Use this command to enable to the station-isolation option on channel blanket for a wireless AP profile. When station-isolation is enabled, the AP blocks communication between wireless clients on the same virtual access point (VAP). The AP still allows data traffic between its wireless clients and wired devices on the network.

Use the **no** variant of this command to disable the station-isolation option.

**Syntax**

```
station-isolation enable
no station-isolation enable
```

**Default**

Disabled.

**Mode**

Wireless AP Profile Channel Blanket Configuration

**Example**

To enable station-isolation for channel blanket on AP profile 100, use the following commands:

```
awplus# configure terminal
awplus(config)# wireless
awplus(config-wireless)# ap-profile 100
awplus(config-wireless-ap-prof)# channel-blanket
awplus(config-wireless-ap-prof-cb)# station-isolation enable
```

**Related commands**

ap-profile (wireless-ap)

show wireless ap-profile

channel-blanket

**Command changes**

Version 5.4.9-1.1: command added

# station-isolation enable (wireless-ap-prof-radio)

**Overview**

Use this command to enable the **station-isolation** option. This option designates whether to allow communication between wireless clients which are connected to the same Virtual Access Point (VAP).

Use the **no** variant of this command to disable the station-isolation option on a selected VAP.

**Syntax**

```
station-isolation enable
no station-isolation enable
```

**Default**

Disabled.

**Mode**

Wireless AP Profile Radio Configuration

**Example**

To enable the station-isolation option for **radio 2** on **ap-profile100**, use the following commands:

```
awplus# configure terminal
awplus(config)# wireless
awplus(config-wireless)# ap-profile 100
awplus(config-wireless-ap-prof)# radio 2
awplus(config-wireless-ap-prof-radio)# station-isolation
enable
```

**Related commands**

radio (wireless-ap-profile)

**Command changes**

Version 5.4.7-2.4: command added.

# task

**Overview**

Use this command to configure an Autonomous Wave Control (AWC) task.

If the task doesn't exist, then this command creates it.

Use the **no** variant of this command to remove the task.

**Syntax**

```
task <1-65535>
no task <1-65535>
```

| Parameter | Description |
|---|---|
| *<1-65535>* | Task ID number |

**Default**

Not set.

**Mode**

Wireless Configuration

**Usage notes**

A task is a configuration for a periodic or scheduled action to be taken. For example, the task may be to run a configuration, start an AWC calculation, or download AP firmware. Use commands such as **description**, **time**, and **day** to configure the task actions.

**Example**

To add a task with an ID of 10, use the following commands:

```
awplus# configure terminal
awplus(config)# wireless
awplus(config-wireless)# task 10
```

To remove task ID 10, use the following commands:

```
awplus# configure terminal
awplus(config)# wireless
awplus(config-wireless)# no task 10
```

**Related commands**

enable (wireless-task)

description (wireless-task)

time (wireless-task)

day (wireless-task)

type download ap (wireless-task)

type ap-configuration apply ap

type power-channel ap all

**Command changes**

Version 5.4.7-2.4: command added

# time (wireless-task)

**Overview**

Use this command to set a time to run a task using the 24-hour format.

You can use the **day** command along with the **time** command to more fully set the task run time configuration.

Use the **no** variant of this command to remove the time set to run a task.

**Syntax**

```
time <HH:MM>
no time
```

| Parameter | Description |
|---|---|
| *<HH:MM>* | The time set to run a task in 24-hour time format. |

**Default**

Not set.

**Mode**

Wireless Task Configuration

**Example**

To set task 5 to run at 11:15 pm, use the following commands:

```
awplus# configure terminal
awplus(config)# wireless
awplus(config-wireless)# task 5
awplus(config-wireless-task)# time 23:15
```

**Related commands**

task

show wireless task

day (wireless-task)

**Command changes**

Version 5.4.7-2.4: command added.

# trap host (wireless-ap-prof-snmp)

**Overview**

Use this command to add an SNMP trap host to the entry for the target AP Profile.

Use the **no** variant of this command to remove the specified SNMP trap host from the entry.

**Syntax**

```
trap host <host-name>
no trap host <host-name>
```

| Parameter | Description |
|---|---|
| *<host-name>* | The host that sends the SNMP trap. Specify the host name (FQDN) or IP address. For example manager.your.domain.com, 10.10.1.37. |

**Default**

The entry is empty.

**Mode**

Wireless AP Profile SNMP Configuration

**Usage notes**

The maximum number of registrations is 3 entries.

**Example**

To add the SNMP trap host 192.168.1.1 to the entry, use the commands:

```
awplus# configure terminal
awplus(config)# wireless
awplus(config-wireless)# ap-profile 2
awplus(config-wireless-ap-prof)# snmp
awplus(config-wireless-ap-prof-snmp)# trap host 192.168.1.1
```

To remove the SNMP trap host 192.168.1.1 from the entry, use the commands:

```
awplus# configure terminal
awplus(config)# wireless
awplus(config-wireless)# ap-profile 2
awplus(config-wireless-ap-prof)# snmp
awplus(config-wireless-ap-prof-snmp)# no trap host 192.168.1.1
```

**Related commands**

enable (wireless-ap-prof-snmp)

show wireless ap-profile

snmp (wireless-ap-prof)

**Command changes**

Version 5.5.0-2.1: command added

# type (wireless-sec-wep)

**Overview**

Use this command to assign the key-string type for a wireless security WEP configuration.

Use the **no** variant of this command to reset the assigned WEP key-string type to the default.

**Syntax**

```
type {ascii|hex}
no type
```

| Parameter | Description |
|---|---|
| ascii | Use ASCII as the type for the WEP key |
| hex | Use Hex as the type for the WEP key |

**Default**

Hex.

**Mode**

Wireless Security WEP Configuration

**Example**

To configure ASCII as the key-string type for WEP for a wireless security WEP configuration, use the following commands:

```
awplus# configure terminal
awplus(config)# wireless
awplus(config-wireless)# network 10 mode wep
awplus(config-wireless-sec-wep)# type ascii
```

**Related commands**

security (wireless)

**Command changes**

Version 5.4.7-2.4: command added.

# type ap-configuration apply ap

**Overview** Use this command to apply a task configuration type to a selected wireless Access Point (AP) or range of wireless APs.

**Syntax**

```
type ap-configuration apply ap {all|<ap-id-range>}
```

| Parameter | Description |
|---|---|
| `all` | Apply the configuration to all APs. |
| *<ap-id-range>* | Apply the configuration to a selected range of APs. |

**Default** Not set.

**Mode** Wireless Task Configuration

**Example** To assign task 5 configuration to wireless AP ranges: 5-9 and 15-19, use the following commands:

```
awplus# configure terminal
awplus(config)# wireless
awplus(config-wireless)# task 5
awplus(config-wireless-task)# type ap-configuration apply ap
5-9,15-19
```

**Related commands**

task

show wireless task

ap

type download ap (wireless-task)

**Command changes** Version 5.4.7-2.4: command added.

# type download ap (wireless-task)

**Overview** Use this command to download and update wireless Access Point (AP) firmware. The firmware must be stored on an HTTP server.

**Syntax**

```
type download ap {all|<ap-id-range>} url <URL> [username
<user-name> password <password>]
```

| Parameter | Description |
|---|---|
| `all` | Run the task on all managed APs. |
| *<ap-id-range>* | Run the task on the selected identifier. |
| *<URL>* | The URL where the firmware is stored and can be downloaded from. |
| *<user-name>* | The username requiring authentication and access to the URL. |
| *<password>* | The password requiring authentication and access to the URL. |

**Mode** Wireless Task Configuration

**Example** To set a task to download new firmware from the IP address192.168.0.1 to a wireless AP which is assigned '7' as its identifier, use the following commands:

```
awplus# configure terminal
awplus(config)# wireless
awplus(config-wireless)# task 5
awplus(config-wireless-task)# type download ap 7 url
http://192.168.0.1/AT-TQ4600-4.0.3.b02.img
```

**Related commands**

task

show wireless task

ap

type ap-configuration apply ap

type power-channel ap all

**Command changes** Version 5.4.7-2.4: command added.

# type power-channel ap all

**Overview** Use this command to calculate the power usage on wireless Access Point (AP) channels and apply the results manually or automatically.

**Syntax**

```
type power-channel ap all {calculate|apply|calculate-and-apply}
```

| Parameter | Description |
|---|---|
| `calculate` | Run the AWC power calculation on all APs. |
| `apply` | Apply the latest AWC power calculation results to all APs. |
| `calculate-and-apply` | Run the AWC power calculation and apply the results to all APs. |

**Default** Not set.

**Mode** Wireless Task Configuration

**Usage notes** This command allows you to monitor how APs are being utilized at various times and adjust AP power levels if required.

**Example** To calculate all AP power-channel usage and apply the results to all APs, use the following commands:

```
awplus# configure terminal
awplus(config)# wireless
awplus(config-wireless)# task 5
awplus(config)# type power-channel ap all calculate-and-apply
```

**Related commands**

task

show wireless task

type download ap (wireless-task)

type ap-configuration apply ap

show wireless power-channel calculate

**Command changes** Version 5.4.7-2.4: command added.

# username (wireless-ap-prof-snmp)

**Overview** Use this command to set an SNMP version v3 username and password for the target AP profile. This command is valid for SNMP version v3 only.

Use the **no** variant of this command to remove an SNMP username and password.

**Syntax**

```
username <username> password [encrypted] <password>
no username
```

| Parameter | Description |
|---|---|
| *<username>* | The user name that is used for user authentication and encryption. Enter up to 12 alphanumeric characters. The user name cannot begin with a number. |
| `encrypted` | Indicates that the following password is in its encrypted form. Its primary purpose is to use to store the shared key to startup-configuration. You should not use it when entering the command manually. |
| *<password>* | The password is used for encryption. Enter from 8 to 32 single-byte alphanumeric characters. The password can use the following symbols (“, ‘, $, &, *, :, <, >). |

**Default** Not set

**Mode** Wireless AP Profile SNMP Configuration

**Example** To set the SNMP username to ‘manager’ and the password to ‘friend001’, use the commands:

```
awplus# configure terminal
awplus(config)# wireless
awplus(config-wireless)# ap-profile 2
awplus(config-wireless-ap-prof)# snmp
awplus(config-wireless-ap-prof-snmp)# username manager
password friend001
```

To remove the SNMP username and password, use the commands:

```
awplus# configure terminal
awplus(config)# wireless
awplus(config-wireless)# ap-profile 2
awplus(config-wireless-ap-prof)# snmp
awplus(config-wireless-ap-prof)# no username
```

**Related commands**

community read-only (wireless-ap-prof-snmp)

community trap (wireless-ap-prof-snmp)

permit host (wireless-ap-prof-snmp)

show wireless ap-profile

snmp (wireless-ap-prof)

version (wireless-ap-prof-snmp)

**Command changes**

Version 5.5.0-2.1: command added

# vap

**Overview** Use this command to assign a network configuration ID to a Virtual Access Point (VAP) on the radio.

Use the **no** variant of this command to remove a specific VAP configuration.

***NOTE:*** *The channel-blanket setting can only be used with AT-TQ5403 and AT-TQ5403e APs. If this is set for other APs, you will not be able to manage those APs. Also, even if the AP profile for AT-TQ5403 or AT-TQ5403e does not include the Channel Blanket setting, those AT-TQ5403 or AT-TQ5403e will not be manageable.*

**Syntax**

```
vap <vap-id> network <network-id> [channel-blanket]
no vap <vap-id>
```

| Parameter | Description |
|---|---|
| *<vap-id>* | Enter the VAP ID in the range of <0-7> |
| *<network-id>* | Enter the network ID in the range of <1-65535> |
| `channel-blanket` | Set the VAP to channel blanket mode |

**Default** Not set.

**Mode** Wireless AP Profile Radio Configuration

**Example** To associate a network (ID 100) with the VAP 2, use the following commands:

```
awplus# configure terminal
awplus(config)# wireless
awplus(config-wireless)# ap 100
awplus(config-wireless-ap)# radio 2
awplus(config-wireless-ap-radio)# vap 2 network 100
```

To associate a network (ID 100) with the VAP 2 as channel blanket mode, use the following commands:

```
awplus# configure terminal
awplus(config)# wireless
awplus(config-wireless)# ap 100
awplus(config-wireless-ap)# radio 2
awplus(config-wireless-ap-radio)# vap 2 network 100
channel-blanket
```

**Related commands**

network (wireless)

radio (wireless-ap-profile)

show wireless channel-blanket ap status

show wireless channel-blanket ap-profile status

**Command changes**

Version 5.4.9-1.1: command added

# vap network (wireless-ap-prof-radio)

**Overview**

Use this command to assign a network configuration ID to a Virtual Access Point (VAP) on a radio.

Use the **no** variant of this command to remove the network configuration for a VAP.

**Syntax**

```
vap <0-7> network <1-65535>
no vap <0-7>
```

| Parameter | Description |
|---|---|
| *<0-7>* | VAP identification number |
| *<1-65535>* | Network configuration of the designated VAP |

**Default**

Not set.

**Mode**

Wireless AP Profile Radio Configuration

**Usage notes**

vap0 is the only VAP identification number valid on the **MWS series**.

**Example**

To associate an AP with network (ID 100) to VAP 2, use the following commands:

```
awplus# configure terminal
awplus(config)# wireless
awplus(config-wireless)# ap-profile 100
awplus(config-wireless-ap-prof)# radio 2
awplus(config-wireless-ap-prof-radio)# vap 2 network 2
```

**Related commands**

radio (wireless-ap-profile)

network (wireless)

**Command changes**

Version 5.4.7-2.4: command added.

# version (wireless-ap-prof-snmp)

**Overview**

Use this command to set the SNMP agent version for the target AP profile.

Use the **no** variant of this command to set it back to the default (v1 and v2c).

**Syntax**

```
version {v1v2c|v3}
no version
```

| Parameter | Description |
|---|---|
| v1v2c | Set when the SNMP agent version is at v1 or v2c. |
| v3 | Set when the SNMP agent version is v3. |

**Default**

v1v2c

**Mode**

Wireless AP Profile SNMP Configuration

**Example**

To set the SNMP version as v3, use the commands:

```
awplus# configure terminal
awplus(config)# wireless
awplus(config-wireless)# ap-profile 2
awplus(config-wireless-ap-prof)# snmp
awplus(config-wireless-ap-prof-snmp)# version v3
```

To set the SNMP listening port back to the default (v1v2c), use the commands:

```
awplus# configure terminal
awplus(config)# wireless
awplus(config-wireless)# ap-profile 2
awplus(config-wireless-ap-prof)# snmp
awplus(config-wireless-ap-prof-snmp)# no version
```

**Related commands**

community read-only (wireless-ap-prof-snmp)

community trap (wireless-ap-prof-snmp)

permit host (wireless-ap-prof-snmp)

show wireless ap-profile

snmp (wireless-ap-prof)

username (wireless-ap-prof-snmp)

**Command changes**

Version 5.5.0-2.1: command added

# versions (wireless-sec-wpa-ent)

**Overview**

Use this command to set the WPA version used for a WPA-enterprise wireless security configuration.

Use the **no** variant of this command to reset the designated version to the default.

**Syntax**

```
versions <version-list>
no versions
```

| Parameter | Description |
|---|---|
| *<version-list>* | The version list. You can use either **wpa**, **wpa2**, **wpa3**, or any combination of the three in any order. |

**Default**

wpa2.

**Mode**

Wireless Security WPA-enterprise Configuration

**Usage notes**

For MWS series devices, a combination of versions and ciphers are supported as follows:

- versions WPA2 and ciphers CCMP
- versions WPA, WPA2, and ciphers TKIP and CCMP

WPA3 is only supported on TS5403 series devices.

**Example**

To configure both WPA and WPA2 as WPA versions on a security configuration for WPA-enterprise, use the following commands:

```
awplus# configure terminal
awplus(config)# wireless
awplus(config-wireless)# security 210 mode wpa-enterprise
awplus(config-wireless-sec-wpa-ent)# versions wpa wpa2
```

**Related commands**

security (wireless)

**Command changes**

Version 5.4.7-2.4: command added.

Version 5.4.9-1.1: **wpa3** parameter added.

# versions (wireless-sec-wpa-psnl)

**Overview**

Use this command to set the WPA version used for a WPA-personal wireless security configuration.

Use the **no** variant of this command to reset the designated version to the default.

**Syntax**

```
versions <version-list>
no versions
```

| Parameter | Description |
|---|---|
| *<version-list>* | The version list. You can use either **wpa**, **wpa2**, **wpa3**, or any combination of the three in any order. |

**Default**

wpa2.

**Mode**

Wireless Security WPA-personal Configuration

**Usage notes**

For MWS series devices, a combination of versions and ciphers are supported as follows:

- versions WPA2 and ciphers CCMP
- versions WPA, WPA2, and ciphers TKIP and CCMP

WPA3 is only supported on TS5403 series devices.

**Example**

To configure both WPA and WPA2 as WPA versions on a security configuration for WPA-personal, use the following commands:

```
awplus# configure terminal
awplus(config)# wireless
awplus(config-wireless)# security 110 mode wpa-personal
awplus(config-wireless-sec-wpa-psnl)# versions wpa wpa2
```

**Related commands**

security (wireless)

**Command changes**

Version 5.4.7-2.4: command added.

Version 5.4.9-1.1: **wpa3** parameter added.

# vlan (wireless-network)

**Overview**

Use this command to configure the wireless VLAN that clients belong to.

Use the **no** variant of this command to reset the wireless VLAN to the default.

**Syntax**

```
vlan <1-4094>
no vlan
```

| Parameter | Description |
|---|---|
| *<1-4094>* | VLAN ID number. |

**Default**

VLAN1.

**Mode**

Wireless Network Configuration

**Example**

To configure a VLAN ID, use the following commands:

```
awplus# configure terminal
awplus(config)# wireless
awplus(config-wireless)# network 20
awplus(config-wireless-network)# vlan 100
```

To restore VLAN 20 to its default value, use the following commands:

```
awplus# configure terminal
awplus(config)# wireless
awplus(config-wireless)# network 20
awplus(config-wireless-network)# no vlan
```

**Related commands**

network (wireless)

show wireless network

**Command changes**

Version 5.4.7-2.4: command added

# walled-garden entry

**Overview**

Use this command to configure walled garden entry to a wireless network Captive Portal.

On the Internet, a walled garden typically controls a user's access to web content and services. The walled garden directs the user's navigation within particular areas to allow access to a selection of websites or prevent access to other websites.

A common example could be a hotel environment where unauthenticated users are allowed to navigate to a designated login page (for example, a hotel website) and all its contents.

Use the **no** variant of this command to remove a walled garden on a wireless network that's configured with a Captive Portal.

**Syntax**

```
walled-garden entry {A.B.C.D|A.B.A.D/M|FQDN}
no walled-garden entry {A.B.C.D|A.B.A.D/M|FQDN}
```

| Parameter | Description |
|---|---|
| A.B.C.D | IPv4 address format, e.g. 1.1.1.1 |
| A.B.C.D/M | IPv4 address format with subnet mask, e.g. 1.1.1.0/24 |
| FQDN | FDQN format.<br>Sequence of {LETTER/DIGIT/HYPHEN}.{LETTER/DIGIT/HYPHEN}...while each dotted part of the name (aa or bb or cc in this example) MUST NOT end with HYPHEN and the first character MUST be a LETTER or a DIGIT. And each dotted part (aa or bb or cc in this example) must be 63 characters or less, e.g. example.com www.example.com |

**Default**

Not set

**Mode**

Wireless Network Captive Portal Configuration

**Example**

To add a new entry to a walled garden list on Captive Portal for network 20, use the commands:

```
awplus# configure terminal
awplus(config)# wireless
awplus(config-wireless)# network 20
awplus(config-wireless-network)# captive-portal
awplus(config-wireless-network-cp)# walled-garden entry
example.com
```

**Related commands**

captive-portal virtual-ip

show wireless network

show wireless captive-portal network walled-garden

**Command changes**

Version 5.5.0-1.3: command added

# wds

**Overview** Use this command to add a Wireless Distribution System (WDS) configuration.

Use the **no** variant of this command to remove a WDS configuration.

**Syntax**

```
wds <1-65535>
```

| Parameter | Description |
|---|---|
| *<1-65535>* | WDS configuration ID number. |

**Default** Not set.

**Mode** Wireless Configuration

**Usage notes** This command adds a WDS configuration and enters the configuration mode.

**Example** To add a WDS configuration for AWC, use the following commands:

```
awplus# configure terminal
awplus(config)# wireless
awplus(config-wireless)# wds 10
```

To remove a WDS configuration for AWC, use the following commands:

```
awplus# configure terminal
awplus(config)# wireless
awplus(config-wireless)# no wds 10
```

**Related commands**

show wireless wds

enable (wireless-wds)

peer (wireless-wds)

security (wireless-wds)

**Command changes** Version 5.4.7-2.4: command added.

# wds radio (wireless-ap)

**Overview**

Use this command to designate a radio interface for an Access Point (AP) in a Wireless Distribution System (WDS) network.

Use the **no** variant of this command to remove a wireless radio interface.

**Syntax**

```
wds radio <1-3>
no wds radio
```

| Parameter | Description |
|---|---|
| *<1-3>* | Designate a radio interface for the WDS connection. |

**Default**

Not set.

**Mode**

Wireless AP Configuration

**Example**

To configure 'radio 2' as the radio interface for a WDS connection, use the following commands:

```
awplus# configure terminal
awplus(config)# wireless
awplus(config-wireless)# ap 100
awplus(config-wireless-ap)# wds radio 2
```

**Related commands**

ap

show wireless ap

**Command changes**

Version 5.4.7-2.4: command added.

# web-auth radius auth group

**Overview**

Use this command to enable Web authentication of clients with a RADIUS group in a wireless network.

Use the **no** variant of this command to disable Web authentication with a RADIUS group.

**Syntax**

```
web-auth radius auth group {radius|<group-name>}
no web-auth radius auth group
```

| Parameter | Description |
|---|---|
| `radius` | Use a RADIUS group, which means **all** RADIUS servers. |
| `<group-name>` | The RADIUS server group. |

**Default**

Not set.

**Mode**

Wireless Network.

**Usage notes**

This command enables Web authentication and designates a RADIUS server group to authenticate clients on a wireless network. RADIUS server groups are defined using the **aaa group server** command. RADIUS server groups can consist of multiple server hosts, but this command only uses two servers.

**Example**

To enable Web authentication with a RADIUS server group, use the following commands:

```
awplus# configure terminal
awplus(config)# wireless
awplus(config-wireless)# network 10
awplus(config-wireless-network)# web-auth radius auth group
radius
```

**Related commands**

aaa group server

network (wireless)

**Command changes**

Version 5.4.7-2.4: command added.

# wireless

**Overview** Use this command to enter wireless configuration mode.

Use the **no** variant of this command to exit wireless configuration mode.

**Syntax**

```
wireless
no wireless
```

**Mode** Global Configuration

**Example** To enter wireless configuration mode, use the following commands:

```
awplus# configure terminal
awplus(config)# wireless
awplus(config-wireless)#
```

**Command changes** Version 5.4.7-2.4: command added.

# wireless ap-configuration apply ap

**Overview** Use this command to apply a configuration to a single Access point (AP) or a range of APs. The configuration must exist before you use this command.

**Syntax**

```
wireless ap-configuration apply ap {all|<ap-idrange>}
```

| Parameter | Description |
|---|---|
| `all` | Apply the configuration to all APs. |
| *<ap-idrange>* | Apply the configuration to a range of APs. The range format is 1-65535. |

**Mode** Privileged Exec

**Example** To apply a configuration to the AP range 1-10, use the command:

```
awplus# configure terminal
awplus(config)# wireless ap-configuration apply 1-10
```

To apply a configuration to all APs, use the command:

```
awplus# wireless ap-configuration apply ap all
```

**Related commands** ap

**Command changes** Version 5.4.7-2.4: command added.

# wireless auto-config

**Overview** Use this command to start an automatic discovery and configuration of wireless APs using Autonomous Wave Control (AWC).

**Syntax**

```
wireless auto-config create-new [country-code <code>]
wireless auto-config ap-profile <1-65535>
wireless auto-config abort
```

| Parameter | Description |
|---|---|
| `ap-profile` | This parameter selects an existing profile to use for configuring the newly discovered APs. |
| *<1-65535>* | Profile ID number from the range 1 to 65535. |
| `create-new` | This parameter automatically creates a new profile based on the AP's model name. |
| `country-code` | Optional parameter, if specified the new profiles will have the country code set. |
| *<code>* | A two letter code representing the country. Use the command show wireless country-code to see the full list of country codes available. |
| `abort` | This parameter stops the automatic discovery process. |

**Mode** Privileged Exec

**Usage notes** AP configuration is created for discovered APs including their IP addresses and MAC addresses. The AP profile is created automatically based on the model name. The network and security is created using defined default values.

Use the **abort** parameter to stop the automatic discovery process from continuing.

**Examples** To start an automatic discovery and configuration of a wireless network and apply the profile ID "1", use the command:

```
awplus# wireless auto-config ap-profile 1
```

To start an automatic discovery and configuration of a wireless network with a new AP profile, use the command:

```
awplus# wireless auto-config create-new
```

To stop an automatic discovery configuration, use the command:

```
awplus# wireless auto-config abort
```

**Related commands** show wireless auto-config

**Command changes** Version 5.4.8-1.1: command added

# wireless download ap url

**Overview** Use this command to download Access Point (AP) firmware from a URL.

**Syntax**

```
wireless download ap {all|<aprange>} url [username <user-name>
password <password>]
```

| Parameter | Description |
|---|---|
| `all` | All APs. |
| `<aprange>` | A range of APs *<1-65535>* |
| `username <user-name>` | The login username.<br><br>The username can contain:<br>• up to 255 characters.<br>• any printable ASCII characters (ASCII 32-126)<br>• special characters: backslash, double-quote or space, but they should be escaped with a backslash. |
| `password <password>` | Passwords can be up to 64 characters in length and can contain printable characters, except:<br>• ?<br>• "(double quotes)<br>• space |

**Default** Not set.

**Mode** Privileged Exec

***NOTE:*** *AWC supports the following firmware version:*

- TW series: v4.0.5B02
- MWS2533AP: v2.2.1, v2.2.3
- MWS600AP/MWS1750AP: v2.2.3

**Example** To download new firmware to all APs from the URL 192.168.0.1, use the following commands:

```
awplus# configure terminal
awplus(config)# wireless
awplus(config-wireless)# wireless download ap all url
http://192.168.0.1/AT-TQ4600-4.0.3.n.b02.img
```

**Related commands** show wireless ap

**Command changes** Version 5.4.7-2.4: command added.

# wireless emergency-mode

**Overview** Use this command to activate or deactivate AWC emergency mode. Wireless networks that have been flagged for emergency-mode are activated or deactivated when this command is configured.

**Syntax**

```
wireless emergency-mode {activate|deactivate}
```

**Default** Deactivated

**Mode** Privileged Exec

**Example** To activate the emergency mode in AWC, use the command:

```
awplus# wireless emergency-mode activate
```

**Related commands** emergency-mode

show wireless

**Command changes** Version 5.5.0-0.3: command added

# wireless export

**Overview** Use this command to export MAC filter entries to a CSV file. If the specified file does not exist, it will be created. If the file does exist then it will be overwritten with the new data.

**Syntax**

```
wireless export wireless-mac-filter <mac-filter-id> <url>
```

| Parameter | Description |
|---|---|
| *<mac-filter-id>* | <1-65535><br>The ID of the MAC filter to export. |
| *<url>* | Path and filename of the export file. |

**Mode** Privileged Exec

**Example** To export MAC filter '20' to a CSV file named 'whitelist.csv', use the following command:

```
awplus# wireless export wireless-mac-filter 20
flash://whitelist.csv
```

Figure 52-32: Sample export file:

```
"00:1a:eb:12:34:56","client1"
"00:1a:eb:12:34:57","client2"
"00:1a:eb:12:34:58","client3"
"00:1a:eb:12:34:59","client4"
"00:1a:eb:12:34:5a","client5"
```

**Related commands**

description (wireless-mac-flt)

filter-entry

show wireless ap-profile

show wireless wireless-mac-filter

wireless import

wireless-mac-filter (wireless)

wireless-mac-filter (wireless-ap-prof)

wireless-mac-filter enable

**Command changes** Version 5.4.8-2.1: command added

# wireless import

**Overview** Use this command to import MAC filter entries from a CSV file. The imported entries can either replace or be appended to the existing entries.

**Syntax**

```
wireless import <url> wireless-mac-filter <mac-filter-id>
{add|replace}
```

| Parameter | Description |
|---|---|
| *<url>* | Path and filename of the import file. |
| *<mac-filter-id>* | <1-65535><br>The ID of the MAC filter to import the entries to. |
| add | Add the filter entries to the specified MAC filter |
| replace | Overwrite the existing MAC filter with the imported entries. |

**Mode** Privileged Exec

**Example** To add MAC filter entries from the file 'whitelist.csv' to MAC filter '20', use the following command:

```
awplus# wireless import flash://whitelist.csv
wireless-mac-filter 20 add
```

Figure 52-33: Sample import file:

```
"00:1a:eb:12:34:56","client1"
"00:1a:eb:12:34:57","client2"
"00:1a:eb:12:34:58","client3"
"00:1a:eb:12:34:59","client4"
"00:1a:eb:12:34:5a","client5"
```

**Related commands**

description (wireless-mac-flt)

filter-entry

show wireless ap-profile

show wireless wireless-mac-filter

wireless export

wireless-mac-filter (wireless)

wireless-mac-filter (wireless-ap-prof)

wireless-mac-filter enable

**Command changes** Version 5.4.8-2.1: command added

# wireless power-channel ap all

**Overview** This command activates AWC to calculate the optimal power-channel levels for all the Access Points (APs) in a wireless network. You can use this command to calculate and apply the latest AWC calculation results to the APs automatically or you can choose to apply them manually.

**Syntax**

```
wireless power-channel ap all
{calculate|apply|calculate-and-apply}
```

| Parameter | Description |
|---|---|
| `calculate` | Use AWC to calculate the optimal power-channel levels for all APs. |
| `apply` | Apply the latest AWC optimal power-channel level results to all APs. |
| `calculate-and-apply` | Use AWC to calculate the optimal power-channel levels for all APs, and apply the results to the APs. |

**Default** Not set.

**Mode** Privileged Exec

**Example** To activate AWC to calculate the optimal power-channel levels for all APs, use the following commands:

```
awplus# configure terminal
awplus(config)# wireless power-channel ap all calculate
```

To apply the latest optimal power-channel results manually to all APs, use the following commands:

```
awplus# configure terminal
awplus(config)# wireless power-channel ap all apply
```

To activate AWC to calculate the optimal power-channel levels for all APs and then automatically apply the results to the APs, use the following commands:

```
awplus# configure terminal
awplus(config)# wireless power-channel ap all
calculate-and-apply
```

**Related commands** show wireless ap power-channel

**Command changes** Version 5.4.7-2.4: command added.

# wireless reset ap

**Overview** Use this command to reset the current configuration applied to a wireless Access Point (AP).

**Syntax**

```
wireless reset ap {all|<aprange>}
```

| Parameter | Description |
|---|---|
| *<aprange>* | Reset the range of APs in the format *<1-65535>* |
| `all` | Reset all APs. |

**Mode** Privileged Exec

**Example** To reset the configuration for wireless APs in the range 1-10, use the following commands:

```
awplus# configure terminal
awplus(config)# wireless reset ap 1-10
```

To reset the configuration for all wireless APs, use the following commands:

```
awplus# configure terminal
awplus(config)# wireless reset ap all
```

**Related commands** ap

**Command changes** Version 5.4.7-2.4: command added.

# wireless-mac-filter (wireless)

**Overview**

Use this command to configure a wireless MAC filter. If the filter does not already exist it will be created when you issue this command.

Use the **no** variant of this command to remove a wireless MAC filter.

**Syntax**

```
wireless-mac-filter <mac-filter-id>
no wireless-mac-filter <mac-filter-id>
```

| Parameter | Description |
|---|---|
| *<mac-filter-id>* | <1-65535><br>Enter the ID of the MAC filter to assign to the AP profile. |

**Default**

No MAC filters are set by default.

**Mode**

Wireless Configuration

**Example**

To add a MAC filter with ID '20' and enter configuration mode for that filter, use the following commands:

```
awplus# configure terminal
awplus(config)# wireless
awplus(config-wireless)# wireless-mac-filter 20
awplus(config-wireless-mac-flt)#
```

To remove a MAC filter with ID '20', use the following commands:

```
awplus# configure terminal
awplus(config)# wireless
awplus(config-wireless)# no wireless-mac-filter 20
```

**Related commands**

description (wireless-mac-flt)

filter-entry

show wireless ap-profile

show wireless wireless-mac-filter

wireless export

wireless import

wireless-mac-filter (wireless-ap-prof)

wireless-mac-filter enable

**Command changes**

Version 5.4.8-2.1: command added

# wireless-mac-filter (wireless-ap-prof)

**Overview** Use this command to assign a MAC filter to a wireless AP profile. You can configure the filter as a 'whitelist' or a 'blacklist'. An AP profile can only have one MAC filter assigned to it.

Use the **no** variant of this command to remove a MAC filter from an AP profile.

**Syntax**

```
wireless-mac-filter {permit|deny} <mac-filter-id>
no wireless-mac-filter
```

| Parameter | Description |
|---|---|
| `permit` | Set the MAC filter as a whitelist. |
| `deny` | Set the MAC filter as a blacklist. |
| *<mac-filter-id>* | <1-65535><br>Enter the ID of the MAC filter to assign to the AP profile. |

**Default** No MAC filter assigned by default.

**Mode** Wireless AP Profile Configuration

**Example** To assign the MAC filter '20' as a whitelist to wireless AP profile '1', use the following commands:

```
awplus# configure terminal
awplus(config)# wireless
awplus(config-wireless)# ap-profile 1
awplus(config-wireless-ap-prof)# wireless-mac-filter permit 20
```

To remove a MAC filter from wireless AP profile '1', use the following commands:

```
awplus# configure terminal
awplus(config)# wireless
awplus(config-wireless)# ap-profile 1
awplus(config-wireless-ap-prof)# no wireless-mac-filter
```

**Related commands**

description (wireless-mac-flt)

filter-entry

show wireless ap-profile

show wireless wireless-mac-filter

wireless export

wireless import

wireless-mac-filter (wireless)

wireless-mac-filter enable

**Command changes**

Version 5.4.8-2.1: command added

# wireless-mac-filter enable

**Overview**

Use this command to enable the MAC filter on a Virtual Access Point (VAP). It will enable the MAC filter based on the filter entry set in the AP profile.

Use the **no** variant of this command to disable the AMC filter on a VAP.

**Syntax**

```
wireless-mac-filter enable
no wireless-mac-filter enable
```

**Default**

Disabled by default.

**Mode**

Wireless Network Configuration

**Example**

To enable wireless MAC filter on APs that use network 100, use the following commands:

```
awplus# configure terminal
awplus(config)# wireless
awplus(config-wireless)# network 100
awplus(config-wireless-network)# wireless-mac-filter enable
```

To disable wireless MAC filter on APs that use network 100, use the following commands:

```
awplus# configure terminal
awplus(config)# wireless
awplus(config-wireless)# network 100
awplus(config-wireless-network)# no wireless-mac-filter enable
```

**Related commands**

description (wireless-mac-flt)

filter-entry

show wireless ap-profile

show wireless wireless-mac-filter

wireless export

wireless import

wireless-mac-filter (wireless)

wireless-mac-filter (wireless-ap-prof)

**Command changes**

Version 5.4.8-2.1: command added

# 53 Device Discovery using SNMP Commands

## Introduction

**Overview**

This chapter provides an alphabetical reference of commands used to configure Device Discovery using SNMP.

SNMP Device Discovery is available from the AlliedWare Plus CLI and is also available from Vista Manager mini. This feature provides information that allows the CLI to display third party vendor device data in real time.

For more information, see the Device Discovery and Monitoring using SNMP Feature Overview and Configuration Guide.

**Command List**


- "clear snmp-discovery" on page 2840
- "service snmp-discovery" on page 2841
- "show running-config snmp-discovery" on page 2842
- "show snmp-discovery" on page 2843
- "snmp-discovery arp-polling-interval" on page 2846
- "snmp-discovery community" on page 2847
- "snmp-discovery deny" on page 2848
- "snmp-discovery permit" on page 2850
- "snmp-discovery snmp-polling-interval" on page 2851
- "snmp-discovery snmp-version" on page 2852
- "snmp-discovery user" on page 2853

# clear snmp-discovery

**Overview** Use this command to remove information learned by the SNMP Discovery process.

**Syntax**

```
clear snmp-discovery ip [<ipv4-address>]
clear snmp-discovery nodes [<ipv4-address>]
```

| Parameter | Description |
|---|---|
| ip | Internet Protocol (IP) |
| <ipv4-address> | IPv4 network address for the discovered device, for example 192.168.3.1 |
| nodes | Node information |
| <ipv4-address> | IPv4 network address for the discovered nodes, for example 192.168.3.1 |

**Default** No information is cleared.

**Mode** Privileged Exec

**Examples** To remove all SNMP discovered devices, use the command:

```
node1# clear snmp-discovery nodes
```

To remove a particular SNMP discovered device, use the command:

```
node1# clear snmp-discovery nodes 192.168.3.1
```

To remove all entries from SNMP Discovery's database of devices discovered by ARP, use the command:

```
node1# clear snmp-discovery ip
```

To remove a particular entry from SNMP Discovery's database of devices discovered by ARP, use the command:

```
node1# clear snmp-discovery ip 192.168.3.1
```

**Related commands** show snmp-discovery

**Command changes** Version 5.5.0-0.3: command added

# service snmp-discovery

**Overview**

Use this command to enable SNMP Discovery to discover devices on an AMF network.

Use the **no** variant of this command to disable SNMP Discovery.

**Syntax**

```
service snmp-discovery
no service snmp-discovery
```

**Default**

Disabled

**Mode**

Global Configuration

**Usage notes**

The server starts a process which detects IP addresses reachable on a network. An SNMP 'get' request is performed on these IP addresses to detect device information. The SNMP name, SNMP description, SNMP location, and SNMP serial number are obtained if they are available.

SNMP Discovery will not run if there are no Layer 3 IP interfaces configured.

**Example**

To start the discovery service on the AMF node, use the commands:

```
awplus# configure terminal
awplus(config)# service snmp-discovery
```

**Related commands**

show snmp-discovery

snmp-discovery arp-polling-interval

snmp-discovery community

snmp-discovery deny

snmp-discovery permit

snmp-discovery snmp-polling-interval

snmp-discovery user

snmp-discovery snmp-version

**Command changes**

Version 5.5.0-0.3: command added

# show running-config snmp-discovery

**Overview** Use this command to display the running configuration for SNMP Discovery.

**Syntax**

```
show running-config snmp-discovery
```

**Mode** Privileged Exec

**Example** To display the running configuration for SNMP Discovery, use the command:

```
awplus# show running-config snmp-discovery
```

**Output** Figure 53-1: Example output from **show running-config snmp-discovery**

```
node1#show running-config snmp-discovery
service snmp-discovery
snmp-discovery community accounting
snmp-discovery user tim encrypted auth md5
U2FsdGVkX1/LyNttTLDzgjJTG6Eh5g2L4ahgXuHLENA= priv des
U2FsdGVkX1+FJsefN+ZvSzUUviRt9ZdsFwtB6HU12lU=
snmp-discovery permit ip 192.168.3.2
snmp-discovery permit ip 192.168.3.6
snmp-discovery deny ip 192.168.3.5
```

**Related commands** show snmp-discovery

**Command changes** Version 5.5.0-0.3: command added

# show snmp-discovery

**Overview** Use this command to show information about the SNMP Discovery process.

**Syntax** `show snmp-discovery [detail|ip|nodes]`

| Parameter | Description |
|---|---|
| `detail` | SNMP Discovery node detail |
| `ip` | SNMP Discovery IP addresses |
| `nodes` | SNMP Discovery node information |

**Mode** User Exec

**Examples** To display information about the SNMP Discovery status, use the command:

```
awplus# show snmp-discovery
```

To display information about the SNMP Discovery IPv4 addresses learned, use the command:

```
awplus# show snmp-discovery ip
```

To display information about the SNMP Discovery nodes learned, use the command:

```
awplus# show snmp-discovery nodes
```

To display information about the SNMP Discovery in greater detail, use the command:

```
awplus# show snmp-discovery detail
```

**Output** Figure 53-2: Example output from **show snmp-discovery**

```
awplus#show snmp-discovery

SNMP Discovery information:

SNMP Discovery                : Enabled
SNMP Polling interval         : 300
ARP Polling interval          : 60
SNMP Discovery version        : v2c
SNMPv2 Discovery Community    : accounting
```

Figure 53-3: Example output from **show snmp-discovery ip**

```
node1#show snmp-discovery ip
SNMP Discovery Devices:

IP Address       MAC Address     Type     State         Last Seen Time
-----------------------------------------------------------------------------
172.18.100.10    -               Permit   -             -
172.18.100.25    0000.cd28.063e  Dynamic  Up            -
172.18.100.15    0001.30fe.c080  Dynamic  Up            -
172.18.100.208   801f.0230.006c  Dynamic  Down          Jul 27, 2020 03:52:01
172.18.100.209   801f.0230.006c  Dynamic  Down          Jul 24, 2020 04:45:30
172.18.100.20    0010.db5c.efe4  Dynamic  Up            -
172.18.100.207   801f.0230.006c  Dynamic  Down          Jul 27, 2020 06:26:20
172.18.100.10    001b.5443.a5b0  Dynamic  Up            -
172.18.100.205   801f.0230.006c  Dynamic  Down          Jul 27, 2020 17:15:15
172.18.100.204   801f.0230.006c  Dynamic  Down          Jul 25, 2020 19:20:35
172.18.100.203   801f.0230.006c  Dynamic  Down          Jul 25, 2020 21:15:04
172.18.100.202   801f.0230.006c  Dynamic  Unreachable   Jul 28, 2020 10:20:10
```

Figure 53-4: Example output from **show snmp-discovery nodes**

```
node1#show snmp-discovery nodes
SNMP Discovery Node information:

System Name      IP Address       MAC Address     Description
-------------------------------------------------------------------------------
TQ1402           172.18.100.15    0001.30fe.c080  wireless access point ...
NAT-ROUTER-DESK  172.18.100.25    0000.cd28.063e  CentreCOM AR570S version ...

Number of SNMP discovered nodes: 2
```

Figure 53-5: Example output from **show snmp-discovery detail**

```
node1#show snmp-discovery detail
SNMP Discovery Node Details:

Name                    TQ1402
Serial Number           FHK1115F13A
IP Address              172.18.100.10
MAC Address             001b.5443.a5b0
Local Interface         port1.0.1
Description             2-radio 802.11ac Wave 2 Wireless Access Point
State                   Down
Location                -
Time Last Seen          2020-07-29T03:33:39Z

Name                    NAT-ROUTER-DESK
Serial Number           -
IP Address              172.18.100.20
MAC Address             0010.db5c.efe4
Local Interface         port1.0.1
Description             Router building 2
State                   Up
Location                -
Time Last Seen          -

Number of SNMP discovered nodes: 2
```

**Related commands**

clear snmp-discovery

service snmp-discovery

show running-config snmp-discovery

snmp-discovery arp-polling-interval

snmp-discovery deny

snmp-discovery permit

snmp-discovery snmp-polling-interval

**Command changes**

Version 5.5.0-0.3: command added

# snmp-discovery arp-polling-interval

**Overview**

Use this command to configure the SNMP ARP polling interval.

Use the **no** variant of this command to set the SNMP ARP polling interval back to the default (60 seconds).

**Syntax**

```
snmp-discovery arp-polling-interval <1-3600>
no snmp-discovery arp-polling-interval
```

| Parameter | Description |
|---|---|
| *<1-3600>* | The polling number in seconds to interval in the range from 1 to 3600. |

**Default**

ARP requests are sent out every 60 seconds

**Mode**

Global Configuration

**Usage notes**

SNMP Discovery first uses ARP to discover subnets that are reachable from the AMF node. This polling happens every 60 seconds by default. Use this command to change the polling interval.

**Examples**

To configure the SNMP Discovery ARP polling interval to 120 seconds, use the commands:

```
awplus# configure terminal
awplus(config)# snmp-discovery arp-polling-interval 120
```

To set the SNMP Discovery ARP polling interval back to the default (60 seconds), use the commands:

```
awplus# configure terminal
awplus(config)# no snmp-discovery arp-polling-interval
```

**Related commands**

service snmp-discovery

show snmp-discovery

**Command changes**

Version 5.5.0-0.3: command added

# snmp-discovery community

**Overview**

Use this command to create an SNMP community in read-only mode for SNMPv1 and v2c only.

Use the **no** variant of this command to remove an SNMP community.

**Syntax**

`snmp-discovery community <community-name>`

| Parameter | Description |
|---|---|
| *<community-name>* | The name of the community that can be up to 20 characters long and is case sensitive. |

**Default**

The SNMP Discovery community name is 'public' by default

**Mode**

Global Configuration

**Usage notes**

This command creates an SNMP community in read-only mode. The community allows access to all MIB objects. The SNMP communities are only valid for SNMPv1 and v2c and provide very limited security. Communities should not be used for SNMPv3.

**Examples**

To configure an SNMP community named 'accounting', use the commands:

```
awplus# configure terminal
awplus(config)# snmp-discovery community accounting
```

To set the SNMP community name back to the default (public), use the commands:

```
awplus# configure terminal
awplus(config)# no snmp-discovery community
```

**Related commands**

service snmp-discovery

show snmp-discovery

**Command changes**

Version 5.5.0-0.3: command added

# snmp-discovery deny

**Overview** Use this command to prevent ARP requests from being sent. When an interface or IPv4 address is denied, it means an ARP request and SNMP 'get' request will never be sent to that device when the command **service snmp-discovery** is enabled.

Use the **no** variant of this command to remove the configuration.

**Syntax**

```
snmp-discovery deny interface <interface-range>
snmp-discovery deny ip <ipv4-address>
no snmp-discovery deny interface <interface-range>
no snmp-discovery deny ip <ipv4-address>
```

| Parameter | Description |
|---|---|
| `interface` | Interfaces to deny |
| `<interface-name>` | Interface name, for example VLAN2 |
| `ip` | IP address |
| `<ipv4-address>` | IPv4 address to deny |

**Default** The AMF management VLAN is denied

**Mode** Global Configuration

**Examples** To configure a deny interface command for VLAN2, use the commands:

```
awplus# configure terminal
awplus(config)# snmp-discovery deny interface vlan2
```

To stop interface VLAN2 from being denied, use the commands:

```
awplus# configure terminal
awplus(config)# no snmp-discovery deny interface vlan2
```

To configure a deny IP command for IP address 192.168.3.2, use the commands:

```
awplus# configure terminal
awplus(config)# snmp-discovery deny ip 192.168.3.2
```

To stop IP address 192.168.3.2 from being denied, use the commands:

```
awplus# configure terminal
awplus(config)# no snmp-discovery deny ip 192.168.3.2
```

**Output** Figure 53-6: Example output from **show snmp-discovery ip**

```
awplus#show snmp-discovery ip
SNMP Discovery Devices:

IP Address       MAC Address     Type     State         Last Seen Time
-----------------------------------------------------------------------------
192.168.3.2      -               Deny     -             -
1.2.3.6          -               Permit   -             30 Jul, 2020 06:30:55
1.2.3.4          -               Permit   -             31 Jul, 2020 05:49:04
192.168.2.2      3863.bb5c.b900  Dynamic  Up            -
```

**Related commands**

service snmp-discovery

show snmp-discovery

**Command changes**

Version 5.5.0-0.3: command added

# snmp-discovery permit

**Overview** Use this command if you want to allow SNMP Discovery to do requests on interfaces with greater than 256 members. You can permit a specific IP address.

**Syntax**

```
snmp-discovery permit ip <ipv4-address>
no snmp-discovery permit ip <ipv4-address>
```

| Parameter | Description |
|---|---|
| ip | Internet Protocol (IP) |
| <ipv4-address> | IPv4 network address |

**Default** All IPv4 interfaces with 256 members or less are included in SNMP Discovery.

**Mode** Global Configuration

**Examples** To configure a permit IP command for the address 192.168.3.2, use the commands:

```
awplus# configure terminal
awplus(config)# snmp-discovery permit ip 192.168.3.2
```

To remove the permit configuration for the address 192.168.3.2, use the commands:

```
awplus# configure terminal
awplus(config)# no snmp-discovery permit ip 192.168.3.2
```

**Output** Figure 53-7: Example output from **show snmp-discovery ip**

```
awplus#show snmp-discovery ip
SNMP Discovery Devices:

IP Address       MAC Address     Type     State         Last Seen Time
-----------------------------------------------------------------------
1.2.3.5          -               Deny     -             -
1.2.3.6          -               Permit   -             Jul 27, 2020 03:33:39
1.2.3.4          -               Permit   -             Jul 28, 2020 04:25:05
192.168.2.2      3863.bb5c.b900  Dynamic  Up            -
192.168.3.2      4263.cc3c.b500  permit   Up            -
```

**Related commands** service snmp-discovery

show snmp-discovery

**Command changes** Version 5.5.0-0.3: command added

# snmp-discovery snmp-polling-interval

**Overview**

Use this command to change the SNMP request polling interval (in seconds).

Use the **no** variant of this command to set the SNMP request polling interval back to the default (300 seconds).

**Syntax**

```
snmp-discovery snmp-polling-interval <60-3600>
no snmp-discovery snmp-polling-interval
```

| Parameter | Description |
|---|---|
| *<60-3600>* | The number of seconds for the SNMP polling interval. From the range 60 to 3600. |

**Default**

300 seconds (5 minutes)

**Mode**

Global Configuration

**Usage notes**

ARP polling and SNMP Discovery uses SNMP 'get' requests to poll the devices discovered by the ARP polling. This polling happens every 300 seconds (5 minutes) by default.

SNMP polling is enabled when **service snmp-discovery** is enabled.

**Examples**

To configure the SNMP discovery polling interval to 120 seconds, use the commands:

```
awplus# configure terminal
awplus(config)# snmp-discovery snmp-polling-interval 120
```

To set the SNMP discovery polling interval back to the default (300 seconds), use the commands:

```
awplus# configure terminal
awplus(config)# no snmp-discovery snmp-polling-interval
```

**Related commands**

service snmp-discovery

show snmp-discovery

**Command changes**

Version 5.5.0-0.3: command added

# snmp-discovery snmp-version

**Overview** Use this command to set the SNMP version that you are using.

Use the **no** variant of this command to set the SNMP version back to the default (v2c).

**Syntax**

```
snmp-discovery snmp-version {v1|v2c|v3}
no snmp-discovery snmp-version
```

| Parameter | Description |
|---|---|
| v1 | Enter the SNMP version number you are using |
| v2c | If you are using SNMP version v2c, set the community name with the command **snmp-discovery community** |
| v3 | If you are using SNMP version v3, set the security with the command **snmp-discovery user** |

**Default** SNMP version v2c

**Mode** Global Configuration

**Usage notes** This command defaults to SNMP version v2c and creates an SNMP community in read-only mode. The community allows access to all the MIB objects. The SNMP communities are only valid for SNMPv1 and v2c and provide very limited security. Communities should not be used when operating SNMPv3.

If using SNMPv3, you can choose the security level and then the authentication protocol and privacy protocol.

**Examples** To configure SNMP Discovery to use SNMP version 3, use the commands:

```
awplus# configure terminal
awplus(config)# snmp-discovery snmp-version v3
```

To set the SNMP Discovery SNMP version back to the default (v2c), use the commands:

```
awplus# configure terminal
awplus(config)# no snmp-discovery snmp-version
```

**Related commands** service snmp-discovery

**Command changes** Version 5.5.0-0.3: command added

# snmp-discovery user

**Overview** Use this command to create a user for SNMPv3 'get' requests only.

Use the **no** variant of this command to remove an SNMPv3 user.

**Syntax**

```
snmp-discovery user <user-name> [encrypted] [auth {md5|sha}
<auth-password>] [priv {des|aes} <privacy-password>]
```

```
no snmp-discovery user <user-name>
```

| Parameter | Description |
|---|---|
| *<user-name>* | The user name is a string up to 20 characters long and is case sensitive. For example, 'Rodger'. |
| `encrypted` | Use the encrypted parameter when you want to enter encrypted passwords. |
| `auth` | Authentication protocol that can be either MD5 or SHA. |
| `md5` | MD5 Message Digest Algorithms. |
| `sha` | SHA Secure Hash Algorithm. |
| *<auth-password>* | Authentication password that is a string from 8 to 20 characters and is case sensitive. |
| `priv` | Privacy protocol that can be either DES or AES. |
| `des` | DES Data Encryption Standard. |
| `aes` | AES Advanced Encryption Standards. |
| *<privacy-password>* | Privacy password is a string from 8 to 20 characters and is case sensitive. |

**Default** No user is configured

**Mode** Global Configuration

**Usage notes** Additionally, this command provides the option of selecting an authentication protocol and (where appropriate) an associated password. Similarly, options are offered for selecting a privacy protocol and password.

The authentication method must match what is used on the devices being configured.

Use the **encrypted** parameter when you want to enter already encrypted passwords in encrypted form as displayed in the running and startup configurations stored on the switch.

User passwords are entered using plain text without the **encrypted** parameter and are encrypted according to the authentication and privacy protocols selected.

User passwords are viewed as encrypted passwords in running and startup configurations shown from the **show running-config** and **show startup-config**

commands. Copy and paste encrypted passwords from the running configuration or startup configuration to avoid entry errors.

**Examples**

To add SNMP Discovery user 'authuser' with authentication protocol 'md5', authentication password 'authpass' privacy protocol 'des' and privacy password privpass, use the commands:

```
awplus# configure terminal
awplus(config)# snmp-discovery user authuser auth md5 Authpass
priv des Privpass
```

To enter existing SNMP user 'authuser' with existing passwords with authentication protocol 'md5' plus the encrypted authentication password '0x1c74b9c22118291b0ce0cd883f8dab6b74', privacy protocol 'des' plus the encrypted privacy password '0x0e0133db5453ebd03822b004eeacb6608f', use the following commands:

*Note Copy and paste the encrypted passwords from the running-config or the startup-config displayed, using the show running-config and show startup-config commands respectively, into the command line to avoid key stroke errors issuing this command.*

```
awplus# configure terminal
awplus(config)# snmp-discovery user authuser encrypted auth
md50x1c74b9c22118291b0ce0cd883f8dab6b74 priv des
0x0e0133db5453ebd03822b004eeacb6608f
```

To delete SNMP user 'authuser', use the following commands:

```
awplus# configure terminal
awplus(config)# no snmp-discovery user authuser
```

**Output**

Figure 53-8: Example output from **show snmp-discovery**

```
awplus#show snmp-discovery
SNMP Discovery information:

SNMP Discovery                : Enabled
SNMP Polling interval         : 300
ARP Polling interval          : 60
SNMP Discovery version        : v3

SNMPv2 Discovery Community    : accounting
SNMPv3 Discovery User         : authuser
User Encrypted auth           : md5
User Encrypted password       : 0x1c74b9c22118291b0ce0cd883f8dab6b74
User Privilege                : des
User Privilege password       : 0x0e0133db5453ebd03822b004eeacb6608f
```

**Related commands**

service snmp-discovery

show snmp-discovery

**Command changes**

Version 5.5.0-0.3: command added

# 54 Dynamic Host Configuration Protocol (DHCP) Commands

## Introduction

**Overview**

This chapter provides an alphabetical reference for commands used to configure DHCP.

Note that the DHCP client does not support tunnel interfaces.

For more information, see the DHCP Feature Overview and Configuration Guide.

For information on filtering and saving command output, see the "Getting Started with AlliedWare Plus" Feature Overview and Configuration Guide.

**Command List**


- "bootfile" on page 2857
- "clear ip dhcp binding" on page 2858
- "default-router" on page 2859
- "dns-server" on page 2860
- "domain-name" on page 2861
- "host (DHCP)" on page 2862
- "ip address dhcp" on page 2863
- "ip dhcp bootp ignore" on page 2865
- "ip dhcp leasequery enable" on page 2866
- "ip dhcp option" on page 2867
- "ip dhcp pool" on page 2869
- "ip dhcp-client default-route distance" on page 2870
- "ip dhcp-client request vendor-identifying-specific" on page 2872
- "ip dhcp-client vendor-identifying-class" on page 2873
- "ip dhcp-relay agent-option" on page 2874
- "ip dhcp-relay agent-option checking" on page 2876

- "ip dhcp-relay agent-option remote-id" on page 2878
- "ip dhcp-relay information policy" on page 2880
- "ip dhcp-relay maxhops" on page 2882
- "ip dhcp-relay max-message-length" on page 2883
- "ip dhcp-relay server-address" on page 2885
- "ip dhcp-relay use-client-side-address" on page 2887
- "lease" on page 2889
- "network (DHCP)" on page 2891
- "next-server" on page 2892
- "option" on page 2893
- "probe enable" on page 2895
- "probe packets" on page 2896
- "probe timeout" on page 2897
- "probe type" on page 2898
- "range" on page 2899
- "route" on page 2900
- "service dhcp-relay" on page 2901
- "service dhcp-server" on page 2902
- "short-lease-threshold" on page 2903
- "show counter dhcp-client" on page 2905
- "show counter dhcp-relay" on page 2906
- "show counter dhcp-server" on page 2910
- "show dhcp lease" on page 2912
- "show ip dhcp binding" on page 2913
- "show ip dhcp pool" on page 2915
- "show ip dhcp-relay" on page 2920
- "show ip dhcp server statistics" on page 2922
- "show ip dhcp server summary" on page 2924
- "subnet-mask" on page 2925

# bootfile

**Overview** This command sets the boot filename for a DHCP server pool. This is the name of the boot file that the client should use in its bootstrap process. It may need to include a path.

The **no** variant of this command removes the boot filename from a DHCP server pool.

**Syntax**

```
bootfile <filename>
no bootfile
```

| Parameter | Description |
|---|---|
| *<filename>* | The boot file name. |

**Mode** DHCP Configuration

**Example** To configure the boot filename for a pool P2, use the command:

```
awplus# configure terminal
awplus(config)# ip dhcp pool P2
awplus(dhcp-config)# bootfile boot/main_boot.bt
```

# clear ip dhcp binding

**Overview** This command clears either a specific lease binding or the lease bindings specified by the command or DHCP server. The command will only take effect on dynamically allocated bindings, not statically configured bindings.

**Syntax**

```
clear ip dhcp binding {ip <ip-address>|mac
<mac-address>|all|pool <pool-name>|range <low-ip-address>
<high-ip-address>}
```

| Parameter | Description |
|---|---|
| `ip <ip-address>` | IPv4 address of the DHCP client, in dotted decimal notation in the format A.B.C.D. |
| `mac <mac-address>` | MAC address of the DHCP client, in hexadecimal notation in the format HHHH.HHHH.HHHH. |
| `all` | All DHCP bindings. |
| `pool <pool-name>` | Description used to identify DHCP server address pool. Valid characters are any printable character. If the name contains spaces then you must enclose these in "quotation marks". |
| `range<low-ip-address> <high-ip-address>` | IPv4 address range for DHCP clients, in dotted decimal notation. The first IP address is the low end of the range, the second IP address is the high end of the range. |

**Mode** User Exec and Privileged Exec

**Usage** A specific binding may be deleted by **ip** address or **mac** address, or several bindings may be deleted at once using **all**, **pool** or **range**.

Note that if you specify to clear the **ip** or **mac** address of what is actually a static DHCP binding, an error message is displayed. If **all**, **pool** or **range** are specified and one or more static DHCP bindings exist within those addresses, any dynamic entries within those addresses are cleared but any static entries are not cleared.

**Examples** To clear the specific IP address binding `192.168.1.1`, use the command:

```
awplus# clear ip dhcp binding ip 192.168.1.1
```

To clear all dynamic DHCP entries, use the command:

```
awplus# clear ip dhcp binding all
```

**Related commands** show ip dhcp binding

# default-router

**Overview** This command adds a default router to the DHCP address pool you are configuring. You can use this command multiple times to create a list of default routers on the client's subnet. This sets the router details using the pre-defined option 3. Note that if you add a user-defined option 3 using the **option** command, then you will override any settings created with this command.

The **no** variant of this command removes either the specified default router, or all default routers from the DHCP pool.

**Syntax**

```
default-router <ip-address>
no default-router [<ip-address>]
```

| Parameter | Description |
|---|---|
| *<ip-address>* | IPv4 address of the default router, in dotted decimal notation. |

**Mode** DHCP Configuration

**Examples** To add a router with an IP address 192.168.1.2 to the DHCP pool named P2, use the following commands:

```
awplus# configure terminal
awplus(config)# ip dhcp pool P2
awplus(dhcp-config)# default-router 192.168.1.2
```

To remove a router with an IP address 192.168.1.2 to the DHCP pool named P2, use the following commands:

```
awplus# configure terminal
awplus(config)# ip dhcp pool P2
awplus(dhcp-config)# no default-router 192.168.1.2
```

To remove all routers from the DHCP pool named P2, use the following commands:

```
awplus# configure terminal
awplus(config)# ip dhcp pool P2
awplus(dhcp-config)# no default-router
```

# dns-server

**Overview**

This command adds a Domain Name System (DNS) server to the DHCP address pool you are configuring. You can use this command multiple times to create a list of DNS name servers available to the client. This sets the DNS server details using the pre-defined option 6.

Note that if you add a user-defined option 6 using the option command, then you will override any settings created with this command.

The **no** variant of this command removes either the specified DNS server, or all DNS servers from the DHCP pool.

**Syntax**

```
dns-server <ip-address>
no dns-server [<ip-address>]
```

| Parameter | Description |
|---|---|
| *<ip-address>* | IPv4 address of the DNS server, in dotted decimal notation. |

**Mode**

DHCP Configuration

**Examples**

To add the DNS server with the assigned IP address 192.168.1.1 to the DHCP pool named P1, use the following commands:

```
awplus# configure terminal
awplus(config)# ip dhcp pool P2
awplus(dhcp-config)# dns-server 192.168.1.1
```

To remove the DNS server with the assigned IP address 192.168.1.1 from the DHCP pool named P1, use the following commands:

```
awplus# configure terminal
awplus(config)# ip dhcp pool P2
awplus(dhcp-config)# no dns-server 192.168.1.1
```

To remove all DNS servers from the DHCP pool named P1, use the following commands:

```
awplus# configure terminal
awplus(config)# ip dhcp pool P2
awplus(dhcp-config)# no dns-server
```

**Related commands**

default-router

option

service dhcp-server

show ip dhcp pool

subnet-mask

# domain-name

**Overview**

This command adds a domain name to the DHCP address pool you are configuring. Use this command to specify the domain name that a client should use when resolving host names using the Domain Name System. This sets the domain name details using the pre-defined option 15.

Note that if you add a user-defined option 15 using the option command, then you will override any settings created with this command.

The **no** variant of this command removes the domain name from the address pool.

**Syntax**

```
domain-name <domain-name>
no domain-name
```

| Parameter | Description |
|---|---|
| *<domain-name>* | The domain name you wish to assign the DHCP pool. Valid characters are any printable character. If the name contains spaces then you must enclose it in "quotation marks". |

**Mode**

DHCP Configuration

**Examples**

To add the domain name `Nerv_Office` to DHCP pool P2, use the commands:

```
awplus# configure terminal
awplus(config)# ip dhcp pool P2
awplus(dhcp-config)# domain-name Nerv_Office
```

To remove the domain name `Nerv_Office` from DHCP pool P2, use the commands:

```
awplus# configure terminal
awplus(config)# ip dhcp pool P2
awplus(dhcp-config)# no domain-name Nerv_Office
```

**Related commands**

default-router

dns-server

option

service dhcp-server

show ip dhcp pool

subnet-mask

# host (DHCP)

**Overview**

This command adds a static host address to the DHCP address pool you are configuring. The client with the matching MAC address is permanently assigned this IP address. No other clients can request it.

The **no** variant of this command removes the specified host address from the DHCP pool. Use the **no host all** command to remove all static host addresses from the DHCP pool.

**Syntax**

```
host <ip-address> <mac-address>
no host <ip-address>
no host all
```

| Parameter | Description |
|---|---|
| *<ip-address>* | IPv4 address of the DHCP client, in dotted decimal notation in the format A.B.C.D |
| *<mac-address>* | MAC address of the DHCP client, in hexadecimal notation in the format HHHH.HHHH.HHHH |

**Mode**

DHCP Configuration

**Usage**

Note that a network/mask must be configured using a **network** command before issuing a **host** command. Also note that a host address must match a network to add a static host address.

**Examples**

To add the host at `192.168.1.5` with the MAC address `000a.451d.6e34` to DHCP pool 1, use the commands:

```
awplus# configure terminal
awplus(config)# ip dhcp pool 1
awplus(dhcp-config)# network 192.168.1.0/24
awplus(dhcp-config)# host 192.168.1.5 000a.451d.6e34
```

To remove the host at `192.168.1.5` with the MAC address `000a.451d.6e34` from DHCP pool 1, use the commands:

```
awplus# configure terminal
awplus(config)# ip dhcp pool 1
awplus(dhcp-config)# no host 192.168.1.5 000a.451d.6e34
```

**Related Commands**

lease

range

show ip dhcp pool

# ip address dhcp

**Overview** This command activates the DHCP client on the interface you are configuring. This allows the interface to use the DHCP client to obtain its IP configuration details from a DHCP server on its connected network.

The **client-id** and **hostname** parameters are identifiers that you may want to set in order to interoperate with your existing DHCP infrastructure. If neither option is needed, then the DHCP server uses the MAC address field of the request to identify the host.

The DHCP client supports the following IP configuration options:

- Option 1— the subnet mask for your device.
- Option 3— a list of default routers.
- Option 6 — a list of DNS servers. This list appends the DNS servers set on your device with the ip name-server command.
- Option 15—a domain name used to resolve host names. This option replaces the domain name set with the ip domain-name command. Your device ignores this domain name if it has a domain list set using the ip domain-list command.
- Option 51—lease expiration time.

The **no** variant of this command stops the interface from obtaining IP configuration details from a DHCP server.

**Syntax**

```
ip address dhcp [client-id <interface>] [hostname <hostname>]
no ip address dhcp
```

| Parameter | Description |
|---|---|
| client-id <interface> | The name of the interface you are activating the DHCP client on. If you specify this, then the MAC address associated with the specified interface is sent to the DHCP server in the optional identifier field.<br>Default: no default |
| hostname <hostname> | The hostname for the DHCP client on this interface. Typically this name is provided by the ISP.<br>Default: no default |

**Mode** Interface Configuration for a VLAN interface, an Eth interface, an 802.1Q sub-interface, a local loopback interface, a PPP interface, a bridge, or a tunnel.

**Examples** To set the interface vlan2 to use DHCP to obtain an IP address, use the commands:

```
awplus# configure terminal
awplus(config)# interface vlan2
awplus(config-if)# ip address dhcp
```

To stop the interface vlan2 from using DHCP to obtain its IP address, use the commands:

```
awplus# configure terminal
awplus(config)# interface vlan2
awplus(config-if)# no ip address dhcp
```

**Related commands**

ip address (IP Addressing and Protocol)

show ip interface

show running-config

# ip dhcp bootp ignore

**Overview**

This command configures the DHCP server to ignore any BOOTP requests it receives. The DHCP server accepts BOOTP requests by default.

The **no** variant of this command configures the DHCP server to accept BOOTP requests. This is the default setting.

**Syntax**

```
ip dhcp bootp ignore
no ip dhcp bootp ignore
```

**Mode**

Global Configuration

**Examples**

To configure the DHCP server to ignore BOOTP requests, use the commands:

```
awplus# configure terminal
awplus(config)# ip dhcp bootp ignore
```

To configure the DHCP server to respond to BOOTP requests, use the commands:

```
awplus# configure terminal
awplus(config)# no ip dhcp bootp ignore
```

**Related commands**

show ip dhcp server summary

# ip dhcp leasequery enable

**Overview**

Use this command to enable the DHCP server to respond to DHCPLEASEQUERY packets. Enabling the DHCP leasequery feature allows a DHCP Relay Agent to obtain IP address information directly from the DHCP server using DHCPLEASEQUERY messages.

Use the **no** variant of this command to disable the support of DHCPLEASEQUERY packets.

For more information, see the DHCP Feature Overview and Configuration Guide.

**Syntax**

```
ip dhcp leasequery enable
no ip dhcp leasequery enable
```

**Default**

DHCP leasequery support is disabled by default.

**Mode**

Global Configuration

**Examples**

To enable DHCP leasequery support, use the commands:

```
awplus# configure terminal
awplus(config)# ip dhcp leasequery enable
```

To disable DHCP leasequery support, use the commands:

```
awplus# configure terminal
awplus(config)# no ip dhcp leasequery enable
```

**Related commands**

show counter dhcp-server

show ip dhcp server statistics

show ip dhcp server summary

# ip dhcp option

**Overview** This command creates a user-defined DHCP option. Options with the same number as one of the pre-defined options override the standard option definition. The pre-defined options use the option numbers 1, 3, 6, 15, and 51.

You can use this option when configuring a DHCP pool, by using the option command.

The **no** variant of this command removes either the specified user-defined option, or removes all user-defined options. This also automatically removes the user-defined options from the associated DHCP address pools.

**Syntax**

```
ip dhcp option <1-254> [name <option-name>] [<option-type>]
no ip dhcp option [<1-254>|<option-name>]
```

| Parameter | Description | |
|---|---|---|
| *<1-254>* | The option number of the option. Options with the same number as one of the standard options overrides the standard option definition. | |
| *<option-name>* | Option name used to identify the option. You cannot use a number as the option name. Valid characters are any printable character. If the name contains spaces then you must enclose it in "quotation marks".<br>Default: no default | |
| *<option-type>* | The option value. You must specify a value that is appropriate to the option type: | |
| | `asci` | An ASCII text string |
| | `hex` | A hexadecimal string. Valid characters are the numbers 0–9 and letters a–f. Embedded spaces are not valid. The string must be an even number of characters, from 2 and 256 characters long. |
| | `ip` | An IPv4 address or mask that has the dotted decimal A.B.C.D notation. To create a list of IP addresses, you must add each IP address individually by using the option command multiple times. |
| | `integer` | A number from 0 to 4294967295. |
| | `flag` | A value that either sets (to 1) or unsets (to 0) a flag: **true**, **on**, or **enabled** will set the flag.<br>**f alse**, **off** or **disabled** will unset the flag. |

**Mode** Global Configuration

**Examples**

To define a user-defined ASCII string option as option 66, without a name, use the command:

```
awplus# configure terminal
awplus(config)# ip dhcp option 66 ascii
```

To define a user-defined hexadecimal string option as option 46, with the name "tcpip-node-type", use the commands:

```
awplus# configure terminal
awplus(config)# ip dhcp option 46 name tcpip-node-type hex
```

To define a user-defined IP address option as option 175, with the name `special-address`, use the commands:

```
awplus# configure terminal
awplus(config)# ip dhcp option 175 name special-address ip
```

To remove the specific user-defined option with the option number 12, use the commands:

```
awplus# configure terminal
awplus(config)# no ip dhcp option 12
```

To remove the specific user-defined option with the option name `perform-router-discovery`, use the commands:

```
awplus# configure terminal
awplus(config)# no ip dhcp option perform-router-discovery
```

To remove all user-defined option definitions, use the commands:

```
awplus# configure terminal
awplus(config)# no ip dhcp option
```

**Related commands**

default-router

dns-server

domain-name

option

service dhcp-server

show ip dhcp server summary

subnet-mask

# ip dhcp pool

**Overview**

This command will enter the configuration mode for the pool name specified. If the name specified is not associated with an existing pool, the device will create a new pool with this name, then enter the configuration mode for the new pool.

Once you have entered the DHCP configuration mode, all commands executed before the next **exit** command will apply to this pool.

You can create multiple DHCP pools on devices with multiple interfaces. This allows the device to act as a DHCP server on multiple interfaces to distribute different information to clients on the different networks.

The **no** variant of this command deletes the specific DHCP pool.

**Syntax**

```
ip dhcp pool <pool-name>
no ip dhcp pool <pool-name>
```

| Parameter | Description |
|---|---|
| *<pool-name>* | Description used to identify this DHCP pool. Valid characters are any printable character. If the name contains spaces then you must enclose it in "quotation marks". |

**Mode**

Global Configuration

**Example**

To create the DHCP pool named P2 and enter DHCP Configuration mode, use the commands:

```
awplus# configure terminal
awplus(config)# ip dhcp pool P2
awplus(dhcp-config)#
```

To delete the DHCP pool named P2, use the commands:

```
awplus# configure terminal
awplus(config)# no ip dhcp pool P2
```

**Related commands**

service dhcp-server

# ip dhcp-client default-route distance

**Overview** Use this command to specify an alternative Administrative Distance (AD) for the current default route (from DHCP) for an interface.

Use the **no** variant of this command to set the AD back to the default of 1.

**Syntax**

```
ip dhcp-client default-route distance [<1-255>]
no ip dhcp-client default-route distance
```

| Parameter | Description |
|---|---|
| *<1-255>* | Administrative Distance (AD) from the range 1 though 255. |

**Default** 1

**Mode** Interface Configuration for a VLAN interface, an Eth interface, an 802.1Q sub-interface, a local loopback interface, a PPP interface, a bridge, or a tunnel.

**Usage notes** DHCP client interfaces can automatically add a default route with an AD of 1 into the IP Routing Information Base (RIB).

Any pre-existing default route(s) via alternative interfaces (configured with a higher AD) will no longer be selected as the preferred forwarding path for traffic when the DHCP based default route is added to the IP routing table.

This can be problematic if the DHCP client is operating via an interface that is only intended to be used for back-up interface redundancy purposes, such as a VLAN containing a single switchport, or a 4G cellular interface on an AR-Series Firewall.

Use this command to set the AD of the default route (via a specific DHCP client interface) to a non-default (higher cost) value, ensuring any pre-existing default route(s) via any other interface(s) continue to be selected as the preferred forwarding path for network traffic.

When the command is used, the static default route is deleted from the RIB, the distance value of the route is modified to the configured distance value, then it is reinstalled into the RIB.

**Examples** To set the AD for the default route added by DHCP via cellular interface wwan0 to 150, use the commands:

```
awplus# configure terminal
awplus(config)# interface wwan0
awplus(config-if)# ip dhcp-client default-route distance 150
```

To set the AD for the default route back to the default value of 1, use the commands:

```
awplus# configure terminal
awplus(config)# interface wwan0
awplus(config-if)# no ip dhcp-client default-route distance
```

**Related commands**

show ip route

show ip route database

**Command changes**

Version 5.4.7-0.2 Command added.

# ip dhcp-client request vendor-identifying-specific

**Overview**

Use this command to add vendor-identifying vendor-specific information (option 125) requests to the DHCP discovery packets sent by an interface. This option, along with option 124, can be used to send vendor-specific information back to a DHCP client.

See RFC3925 for more information on Vendor-Identifying Vendor Options for DHCPv4.

Use the **no** variant of this command to remove the vendor-identifying-specific request from an interface.

**Syntax**

```
ip dhcp-client request vendor-identifying-specific
no ip dhcp-client request vendor-identifying-specific
```

**Default**

The vendor-identifying-specific request is not configured by default.

**Mode**

Interface Configuration

**Usage notes**

The DHCP client must be activated on the interface, using the ip address dhcp command, so that DHCP discovery packets are sent.

**Example**

To add the vendor-identifying-specific request on vlan2, use the commands:

```
awplus# configure terminal
awplus(config)# interface vlan2
awplus(config-if)# ip dhcp-client request
vendor-identifying-specific
```

To remove the vendor-identifying-specific request on vlan2, use the commands:

```
awplus# configure terminal
awplus(config)# interface vlan2
awplus(config-if)# no ip dhcp-client request
vendor-identifying-specific
```

**Related commands**

ip address dhcp

ip dhcp-client vendor-identifying-class

**Command changes**

Version 5.4.7-2.1: command added

# ip dhcp-client vendor-identifying-class

**Overview**

Use this command to add a vendor-identifying vendor class (option 124) to the DHCP discovery packets sent by an interface. This option places the Allied Telesis Enterprise number (207) into the discovery packet. Option 124, along with option 125, can be used to send vendor-specific information back to a DHCP client.

See RFC3925 for more information on Vendor-Identifying Vendor Options for DHCPv4.

Use the **no** variant of this command to remove the vendor-identifying-class from an interface.

**Syntax**

```
ip dhcp-client vendor-identifying-class
no ip dhcp-client vendor-identifying-class
```

**Default**

The vendor-identifying-class is not configured by default.

**Mode**

Interface Configuration

**Usage notes**

The DHCP client must be activated on the interface, using the ip address dhcp command, so that DHCP discovery packets are sent.

**Example**

To remove the vendor-identifying-class on vlan2, use the commands:

```
awplus# configure terminal
awplus(config)# interface vlan2
awplus(config-if)# no ip dhcp-client vendor-identifying-class
```

**Related commands**

ip address dhcp

ip dhcp-client request vendor-identifying-specific

**Command changes**

Version 5.4.7-2.1: command added

# ip dhcp-relay agent-option

**Overview**

This command enables the DHCP Relay Agent to insert the DHCP Relay Agent Information Option (Option 82) into the client-request packets that it relays to its DHCP server. This allows the DHCP Relay Agent to pass on information to the server about the network location of the client device. The DHCP Relay Agent strips the DHCP Relay Agent Option 82 field out of the DHCP server's response, so that the DHCP client never sees this field.

When the DHCP Relay Agent appends its DHCP Relay Agent Option 82 data into the packet, it first overwrites any pad options present; then if necessary, it increases the packet length to accommodate the DHCP Relay Agent Option 82 data.

The **no** variant of this command stops the DHCP Relay Agent from appending the Option 82 field onto DHCP requests before forwarding it to the server.

For DHCP Relay Agent and DHCP Relay Agent Option 82 introductory information, see the DHCP Feature Overview and Configuration Guide.

***NOTE:*** *The DHCP-relay service might alter the content of the DHCP Relay Agent Option 82 field, if the commands ip dhcp-relay agent-option and ip dhcp-relay information policy have been configured.*

**Syntax**

```
ip dhcp-relay agent-option
no ip dhcp-relay agent-option
```

**Default**

DHCP Relay Agent Information Option (Option 82) insertion is disabled by default.

**Mode**

Interface Configuration for a VLAN interface or a PPP interface.

**Usage notes**

Use this command to alter the DHCP Relay Agent Option 82 setting when your device is the first hop for the DHCP client. To limit the maximum length of the packet, use the ip dhcp-relay max-message-length command.

**Examples**

To make the DHCP Relay Agent listening on vlan2 append the DHCP Relay Agent Option 82 field, use the commands:

```
awplus# configure terminal
awplus(config)# interface vlan2
awplus(config-if)# ip dhcp-relay agent-option
```

To stop the DHCP Relay Agent from appending the DHCP Relay Agent Option 82 field on vlan2, use the commands:

```
awplus# configure terminal
awplus(config)# interface vlan2
awplus(config-if)# no ip dhcp-relay agent-option
```

To make the relay agent listening on PPP interface ppp0 append the DHCP Relay Agent Option 82 field, use the commands:

```
awplus# configure terminal
awplus(config)# interface ppp0
awplus(config-if)# ip dhcp-relay agent-option
```

To stop the relay agent from appending the DHCP Relay Agent Option 82 field on PPP interface ppp0, use the commands:

```
awplus# configure terminal
awplus(config)# interface ppp0
awplus(config-if)# no ip dhcp-relay agent-option
```

**Related commands**

ip dhcp-relay agent-option remote-id

ip dhcp-relay information policy

ip dhcp-relay max-message-length

service dhcp-relay

# ip dhcp-relay agent-option checking

**Overview**

This command enables the DHCP Relay Agent to check DHCP Relay Agent Information Option (Option 82) information in response packets returned from DHCP servers. If the information does not match the information it has for its own client (downstream) interface then the DHCP Relay Agent drops the packet. Note that ip dhcp-relay agent-option must be configured.

The DHCP Relay Agent Option 82 field is included in relayed client DHCP packets if:

- DHCP Relay Agent Option 82 is enabled (ip dhcp-relay agent-option), and
- DHCP Relay Agent is enabled on the device (service dhcp-relay)

For DHCP Relay Agent and DHCP Relay Agent Option 82 introductory information, see the DHCP Feature Overview and Configuration Guide.

**Syntax**

```
ip dhcp-relay agent-option checking
no ip dhcp-relay agent-option checking
```

**Mode**

Interface Configuration for a VLAN interface or a PPP interface.

**Examples**

To make the DHCP Relay Agent listening on vlan2 check the DHCP Relay Agent Information Option (Option 82) field, use the commands:

```
awplus# configure terminal
awplus(config)# interface vlan2
awplus(config-if)# ip dhcp-relay agent-option
awplus(config-if)# ip dhcp-relay agent-option checking
```

To stop the DHCP Relay Agent on vlan2 from checking the DHCP Relay Agent Information Option (Option 82) field, use the commands:

```
awplus# configure terminal
awplus(config)# interface vlan2
awplus(config-if)# no ip dhcp-relay agent-option checking
```

To make the relay agent listening on PPP interface ppp0 check the DHCP Relay Agent Information Option (Option 82) field, use the commands:

```
awplus# configure terminal
awplus(config)# interface ppp0
awplus(config-if)# ip dhcp-relay agent-option
awplus(config-if)# ip dhcp-relay agent-option checking
```

To stop the relay agent from checking the DHCP Relay Agent Information Option (Option 82) field on PPP interface ppp0, use the commands:

```
awplus# configure terminal
awplus(config)# interface ppp0
awplus(config-if)# no ip dhcp-relay agent-option checking
```

**Related commands**

ip dhcp-relay agent-option

ip dhcp-relay agent-option remote-id

ip dhcp-relay information policy

service dhcp-relay

# ip dhcp-relay agent-option remote-id

**Overview**

Use this command to specify the Remote ID sub-option of the DHCP Relay Agent Option 82 field the DHCP Relay Agent inserts into clients' request packets. The Remote ID identifies the device that is inserting the DHCP Relay Agent Option 82 information. If a Remote ID is not specified, the Remote ID sub-option is set to the device's MAC address.

Use the **no** variant of this command to return the Remote ID for an interface.

For DHCP Relay Agent and DHCP Relay Agent Option 82 introductory information, see the DHCP Feature Overview and Configuration Guide.

**Syntax**

```
ip dhcp-relay agent-option remote-id <remote-id>
no ip dhcp-relay agent-option remote-id
```

| Parameter | Description |
|---|---|
| *<remote-id>* | An alphanumeric (ASCII) string, 1 to 63 characters in length. Additional characters allowed are hyphen (-), underscore (_) and hash (#). Spaces are not allowed. |

**Default**

The Remote ID is set to the device's MAC address by default.

**Mode**

Interface Configuration for a VLAN interface or a PPP interface.

**Usage notes**

The Remote ID sub-option is included in the DHCP Relay Agent Option 82 field of relayed client DHCP packets if:

- DHCP Relay Agent Option 82 is enabled (ip dhcp-relay agent-option), and
- DHCP Relay Agent is enabled on the device (service dhcp-relay)

**Examples**

To set the Remote ID to myid for client DHCP packets received on vlan1, use the commands:

```
awplus# configure terminal
awplus(config)# interface vlan1
awplus(config-if)# ip dhcp-relay agent-option remote-id myid
```

To remove the Remote ID specified for vlan1, use the commands:

```
awplus# configure terminal
awplus(config)# interface vlan1
awplus(config-if)# no ip dhcp-relay agent-option remote-id
```

To set the Remote ID to myid for client DHCP packets received on PPP interface ppp0, use the commands:

```
awplus# configure terminal
awplus(config)# interface ppp0 timeslots all
awplus(config-if)# ip dhcp-relay agent-option remote-id myid
```

To remove the Remote ID specified for PPP interface ppp0, use the commands:

```
awplus# configure terminal
awplus(config)# interface ppp0 timeslots all
awplus(config-if)# no ip dhcp-relay agent-option remote-id
```

**Related commands**

ip dhcp-relay agent-option

ip dhcp-relay agent-option checking

show ip dhcp-relay

# ip dhcp-relay information policy

**Overview**

This command sets the policy for how the DHCP relay deals with packets arriving from the client that contain DHCP Relay Agent Option 82 information.

If the command **ip dhcp-relay agent-option** has not been configured, then this command has no effect at all - no alteration is made to Option 82 information in packets arriving from the client side.

However, if the command **ip dhcp-relay agent-option** has been configured, this command modifies how the DHCP relay service deals with cases where the packet arriving from the client side already contains DHCP Relay Agent Option 82 information.

This command sets the action that the DHCP relay should take when a received DHCP client request contains DHCP Relay Agent Option 82 information.

By default, the DHCP Relay Agent replaces any existing DHCP Relay Agent Option 82 field with its own DHCP Relay Agent field. This is equivalent to the functionality of the **replace** parameter.

The **no** variant of this command returns the policy to the default behavior - i.e. replacing the existing DHCP Relay Agent Option 82 field.

For DHCP Relay Agent and DHCP Relay Agent Option 82 introductory information, see the DHCP Feature Overview and Configuration Guide.

***NOTE:*** *The DHCP-relay service might alter the content of the DHCP Relay Agent Option 82 field, if the commands ip dhcp-relay agent-option and ip dhcp-relay information policy have been configured.*

**Syntax**

```
ip dhcp-relay information policy {append|drop|keep|replace}
no ip dhcp-relay information policy
```

| Parameter | Description |
|---|---|
| `append` | The DHCP Relay Agent appends the DHCP Relay Agent Option 82 field of the packet with its own DHCP Relay Agent Option 82 details. |
| `drop` | The DHCP Relay Agent discards the packet. |
| `keep` | The DHCP Relay Agent forwards the packet without altering the DHCP Relay Agent Option 82 field. |
| `replace` | The DHCP Relay Agent replaces the existing DHCP Relay Agent details in the DHCP Relay Agent Option 82 field with its own details before forwarding the packet. |

**Mode**

Interface Configuration for a VLAN interface or a PPP interface.

**Examples**

To make the DHCP Relay Agent listening on vlan2 drop any client requests that already contain DHCP Relay Agent Option 82 information, use the commands:

```
awplus# configure terminal
awplus(config)# interface vlan2
awplus(config-if)# ip dhcp-relay information policy drop
```

To reset the DHCP relay information policy to the default policy for interface vlan2, use the commands:

```
awplus# configure terminal
awplus(config)# interface vlan2
awplus(config-if)# no ip dhcp-relay information policy
```

**Related commands**

ip dhcp-relay agent-option

ip dhcp-relay agent-option checking

service dhcp-server

# ip dhcp-relay maxhops

**Overview**

This command sets the hop count threshold for discarding BOOTP messages. When the hops field in a BOOTP message exceeds the threshold, the DHCP Relay Agent discards the BOOTP message. The hop count threshold is set to 10 hops by default.

Use the **no** variant of this command to reset the hop count to the default.

For DHCP Relay Agent and DHCP Relay Agent Option 82 introductory information, see the DHCP Feature Overview and Configuration Guide.

**Syntax**

```
ip dhcp-relay maxhops <1-255>
no ip dhcp-relay maxhops
```

| Parameter | Description |
|---|---|
| *<1-255>* | The maximum hop count value. |

**Default**

The default hop count threshold is 10 hops.

**Mode**

Interface Configuration for a VLAN interface or a PPP interface.

**Example**

To set the maximum number of hops to 5 for packets received on interface vlan2, use the commands:

```
awplus# configure terminal
awplus(config)# interface vlan2
awplus(config-if)# ip dhcp-relay maxhops 5
```

**Related commands**

service dhcp-relay

# ip dhcp-relay max-message-length

**Overview**

This command applies when the device is acting as a DHCP Relay Agent and DHCP Relay Agent Option 82 insertion is enabled. It sets the maximum DHCP message length (in bytes) for the DHCP packet with its DHCP Relay Agent Option 82 data inserted. From this value it calculates the maximum packet size that it will accept at its input. Packets that arrive greater than this value will be dropped.

The **no** variant of this command sets the maximum message length to its default of 1400 bytes.

For DHCP Relay Agent and DHCP Relay Agent Option 82 introductory information, see the DHCP Feature Overview and Configuration Guide.

**Syntax**

```
ip dhcp-relay max-message-length <548-1472>
no ip dhcp-relay max-message-length
```

| Parameter | Description |
|---|---|
| *<548-1472>* | The maximum DHCP message length (this is the message header plus the inserted DHCP option fields in bytes). |

**Default**

The default is 1400 bytes.

**Mode**

Interface Configuration for a VLAN interface or a PPP interface.

**Usage notes**

When a DHCP Relay Agent (that has DHCP Relay Agent Option 82 insertion enabled) receives a request packet from a DHCP client, it will append the DHCP Relay Agent Option 82 component data, and forward the packet to the DHCP server. The DHCP client will sometimes issue packets containing pad option fields that can be overwritten with Option 82 data.

Where there are insufficient pad option fields to contain all the DHCP Relay Agent Option 82 data, the DHCP Relay Agent will increase the packet size to accommodate the DHCP Relay Agent Option 82 data. If the new (increased) packet size exceeds that defined by the **maximum-message-length** parameter, then the DHCP Relay Agent will drop the packet.

***NOTE:*** *Before setting this command, you must first run the ip dhcp-relay agent-option command. This will allow the DHCP Relay Agent Option 82 fields to be appended.*

**Example**

To set the maximum DHCP message length to 1200 bytes for packets arriving in interface vlan2, use the commands:

```
awplus# configure terminal
awplus(config)# interface vlan2
awplus(config-if)# ip dhcp-relay max-message-length 1200
```

To reset the maximum DHCP message length to the default of 1400 bytes for packets arriving in interface vlan2, use the commands:

```
awplus# configure terminal
awplus(config)# interface vlan2
awplus(config-if)# no ip dhcp-relay max-message-length
```

**Related commands**

service dhcp-relay

# ip dhcp-relay server-address

## Overview

This command adds a DHCP server for the DHCP Relay Agent to forward client DHCP packets to on a particular interface. You can add up to five DHCP servers on each device interface that the DHCP Relay Agent is listening on.

The **no** variant of this command deletes the specified DHCP server from the list of servers available to the DHCP relay agent.

The **no ip dhcp-relay** command removes all DHCP relay settings from the interface.

For DHCP Relay Agent and DHCP Relay Agent Option 82 introductory information, see the DHCP Feature Overview and Configuration Guide.

## Syntax

```
ip dhcp-relay server-address {<ipv4-address>|<ipv6-address>
<server-interface>}
```

```
no ip dhcp-relay server-address {<ipv4-address>|<ipv6-address>
<server-interface>}
```

```
no ip dhcp-relay
```

| Parameter | Description |
|---|---|
| *<ipv4-address>* | Specify the IPv4 address of the DHCP server for the DHCP Relay Agent to forward client DHCP packets to, in dotted decimal notation. The IPv4 address uses the format A.B.C.D. |
| *<ipv6-address>* | Specify the IPv6 address of the DHCPv6 server for the DHCPv6 Relay Agent to forward client DHCP packets to, in hexadecimal notation. |
| *<server-interface>* | Specify the interface name of the DHCPv6 server. It is only required for a DHCPv6 server with an IPv6 address. |

## Mode

Interface Configuration for a VLAN interface or a PPP interface.

## Usage notes

For a DHCP server with an IPv6 address you must specify the interface for the DHCP server. See examples below for configuration differences between IPv4 and IPv6 DHCP relay servers.

See also the service dhcp-relay command to enable the DHCP Relay Agent on your device. The ip dhcp-relay server-address command defines a relay destination on an interface on the device, needed by the DHCP Relay Agent to relay DHCP client packets to a DHCP server.

**Examples**

To enable the DHCP Relay Agent to relay DHCP packets on interface vlan2 to the DHCP server with the IPv4 address 192.0.2.200, use the commands:

```
awplus# configure terminal
awplus(config)# service dhcp-relay
awplus(config)# interface vlan2
awplus(config-if)# ip dhcp-relay server-address 192.0.2.200
```

To remove the DHCP server with the IPv4 address 192.0.2.200 from the list of servers available to the DHCP Relay Agent on interface vlan2, use the commands:

```
awplus# configure terminal
awplus(config)# interface vlan2
awplus(config-if)# no ip dhcp-relay server-address 192.0.2.200
```

To enable the DHCP Relay Agent on your device to relay DHCP packets on interface vlan10 to the DHCP server with the IPv6 address 2001:0db8:010d::1 on interface vlan20, use the commands:

```
awplus# configure terminal
awplus(config)# service dhcp-relay
awplus(config)# interface vlan10
awplus(config-if)# ip dhcp-relay server-address
2001:0db8:010d::1 vlan20
```

To remove the DHCP server with the IPv6 address 2001:0db8:010d::1 on interface vlan20 from the list of servers available to the DHCP Relay Agent on interface vlan10, use the commands:

```
awplus# configure terminal
awplus(config)# interface vlan10
awplus(config-if)# no ip dhcp-relay server-address
2001:0db8:010d::1 vlan20
```

To disable DHCP relay on vlan2, use the commands:

```
awplus# configure terminal
awplus(config)# interface vlan2
awplus(config-if)# no ip dhcp-relay
```

**Related commands**

service dhcp-relay

# ip dhcp-relay use-client-side-address

**Overview** Use this command to configure DHCP-Relay to use the client-side interface (that is the interface receiving the DHCP client packets) IP address as the source address of the relayed DHCP packets.

Use the **no** variant of this command to disable the use of the client-side interface IP address as the source IP address for relayed DHCP packets.

**Syntax**

```
ip dhcp-relay use-client-side-address
no ip dhcp-relay use-client-side-address
```

| Parameter | Description |
|---|---|
| `use-client-side-address` | Use the client side interface IP address as the source IP address for relayed DHCP packets. |

**Default** By default, the server-side interface IP address is used as the source IP address of DHCP relayed packets.

**Mode** Global Configuration

**Usage notes** In most cases, there are filters placed between the DHCP relay and DHCP server which only allow DHCP packets from the client subnet to the server and back. This command allows you to configure the DHCP relay so that the relay will use the IP address of the interface **receiving** clients DHCP requests to be used as the source IP address of the relayed DHCP packets.

**Example** To configure the client-side IP address as the source IP address of DHCP relayed packets, use the following commands:

```
awplus# configure terminal
awplus(config)# ip dhcp-relay use-client-side-address
```

**Output** Figure 54-1: Example output from **show ip dhcp-relay**

Note that the second line of the display output shows the status of the client-side address being enabled as the source IP address.

```
awplus#sh ip dhcp-relay

DHCP Relay Service is enabled
Use of client side address as source address is enabled

vlan2 is down, line protocol is down
Maximum hop count is 10
Maximum DHCP message length is 1400
Insertion of Relay Agent Option is disabled
Checking of Relay Agent Option is disabled
Insertion of Subscriber-ID auto-MAC is disabled
The Remote Id string for Relay Agent Option is 0000.0000.0000
Relay Information policy is to replace existing relay agent information
List of servers :   10.1.1.100
```

**Related commands** ip dhcp-relay server-address

**Command changes** Version 5.4.9-0.7: command added

# lease

**Overview** This command sets the expiration time for a leased address for the DHCP address pool you are configuring. The time set by the days, hours, minutes and seconds is cumulative. The minimum total lease time that can be configured is 20 seconds. The maximum total lease time that can be configured is 120 days.

Note that if you add a user-defined option 51 using the option command, then you will override any settings created with this command. Option 51 specifies a lease time of 1 day.

Use the **infinite** parameter to set the lease expiry time to infinite (leases never expire).

Use the **no** variant of this command to return the lease expiration time back to the default of one day.

**Syntax**

```
lease <days> <hours> <minutes> [<seconds>]
lease infinite
no lease
```

| Parameter | Description |
|---|---|
| *<days>* | The number of days, from 0 to 120, that the lease expiry time is configured for.<br>Default: 1 |
| *<hours>* | The number of hours, from 0 to 24, that the lease expiry time is configured for.<br>Default: 0 |
| *<minutes>* | The number of minutes, from 0 to 60, the lease expiry time is configured for.<br>Default: 0 |
| *<seconds>* | The number of seconds, from 0 to 60, the lease expiry time is configured for. |
| `infinite` | The lease never expires. |

**Default** The default lease time is 1 day.

**Mode** DHCP Configuration

**Examples** To set the lease expiration time for address pool P2 to 35 minutes, use the commands:

```
awplus# configure terminal
awplus(config)# ip dhcp pool P2
awplus(dhcp-config)# lease 0 0 35
```

To set the lease expiration time for the address pool `Nerv_Office` to 1 day, 5 hours, and 30 minutes, use the commands:

```
awplus# configure terminal
awplus(config)# ip dhcp pool Nerv_Office
awplus(dhcp-config)# lease 1 5 30
```

To set the lease expiration time for the address pool P3 to 20 seconds, use the commands:

```
awplus# configure terminal
awplus(config)# ip dhcp pool P3
awplus(dhcp-config)# lease 0 0 0 20
```

To set the lease expiration time for the pool to never expire, use the command:

```
awplus(dhcp-config)# lease infinite
```

To return the lease expiration time to the default of one day, use the command:

```
awplus(dhcp-config)# no lease
```

**Related commands**

option

service dhcp-server

short-lease-threshold

# network (DHCP)

**Overview**

This command sets the network (subnet) that the DHCP address pool applies to.

The **no** variant of this command removes the network (subnet) from the DHCP address pool.

**Syntax**

```
network
{<ip-subnet-address/prefix-length>|<ip-subnet-address/mask>}
no network
```

| Parameter | Description |
|---|---|
| *<ip-subnet-address/prefix-length>* | The IPv4 subnet address in dotted decimal notation followed by the prefix length in slash notation. |
| *<ip-subnet-address/mask>* | The IPv4 subnet address in dotted decimal notation followed by the subnet mask in dotted decimal notation. |

**Mode**

DHCP Configuration

**Usage notes**

This command will fail if it would make existing ranges invalid. For example, if they do not lie within the new network you are configuring.

The **no** variant of this command will fail if ranges still exist in the pool. You must remove all ranges in the pool before issuing a **no network** command to remove a network from the pool.

**Examples**

To configure a network for the address pool P2, where the subnet is `192.0.2.5` and the mask is `255.255.255.0`, use the commands:

```
awplus# configure terminal
awplus(config)# ip dhcp pool P2
awplus(dhcp-config)# network 192.0.2.5/24
```

or you can use dotted decimal notation instead of slash notation for the subnet-mask:

```
awplus# configure terminal
awplus(config)# ip dhcp pool P2
awplus(dhcp-config)# network 192.0.2.5 255.255.255.0
```

**Related commands**

service dhcp-server

subnet-mask

# next-server

**Overview** This command sets the next server address for a DHCP server pool. It is the address of the next server that the client should use in its bootstrap process.

The **no** variant of this command removes the next server address from the DHCP address pool.

**Syntax**

```
next-server <ip-address>
no next-server
```

| Parameter | Description |
|---|---|
| *<ip-address>* | The server IP address, entered in dotted decimal notation. |

**Mode** DHCP Configuration

**Example** To set the next-server address for the address pool P2, use the commands:

```
awplus# configure terminal
awplus(config)# ip dhcp pool P2
awplus(dhcp-config)# next-server 192.0.2.2
```

# option

**Overview** This command adds a user-defined option to the DHCP address pool you are configuring. For the **hex**, **integer**, and **flag** option types, if the option already exists, the new option overwrites the existing option's value. Options with an **ip** type can hold a list of IP addresses or masks (i.e. entries that have the A.B.C.D address format), so if the option already exists in the pool, then the new IP address is added to the list of existing IP addresses.

Options with the same number as one of the pre-defined options override the standard option definition. The pre-defined options use the option numbers 1, 3, 6, 15, and 51.

The **no** variant of this command removes the specified user-defined option from the DHCP pool, or all user-defined options from the DHCP pool.

**Syntax**

```
option [<1-254>|<option-name>] <option-value>
no option [<1-254>|<option-value>]
```

| Parameter | Description | |
|---|---|---|
| *<1-254>* | The option number of the option. Options with the same number as one of the standard options overrides the standard option definition. | |
| *<option-name>* | Option name associated with the option. | |
| *<option-value>* | The option value. You must specify a value that is appropriate to the option type: | |
| | `hex` | A hexadecimal string. Valid characters are the numbers 0–9 and letters a–f. Embedded spaces are not valid. The string must be an even number of characters, from 2 and 256 characters long. |
| | `ip` | An IPv4 address or mask that has the dotted decimal A.B.C.D notation. To create a list of IP addresses, you must add each IP address individually using the option command multiple times. |
| | `integer` | A number from 0 to 4294967295. |
| | `flag` | A value of either true, on, or enabled to set the flag, or false, off or disabled to unset the flag. |

**Mode** DHCP Configuration

**Examples**

To add the ASCII-type option named `tftp-server-name` to the pool P2 and give the option the value `server1`, use the commands:

```
awplus# configure terminal
awplus(config)# ip dhcp pool P2
awplus(dhcp-config)# option tftp-server-name server1
```

To add the hex-type option named `tcpip-node-type` to the pool P2 and give the option the value `08af`, use the commands:

```
awplus# configure terminal
awplus(config)# ip dhcp pool P2
awplus(dhcp-config)# option tcpip-node-type 08af
```

To add multiple IP addresses for the ip-type option `175`, use the command:

```
awplus(dhcp-config)# option 175 192.0.2.6
awplus(dhcp-config)# option 175 192.0.2.12
awplus(dhcp-config)# option 175 192.0.2.33
```

To add the option `179` to a pool, and give the option the value `123456`, use the command:

```
awplus(dhcp-config)# option 179 123456
```

To add a user-defined flag option with the name `perform-router-discovery`, use the command:

```
awplus(dhcp-config)# option perform-router-discovery yes
```

To clear all user-defined options from a DHCP address pool, use the command:

```
awplus(dhcp-config)# no option
```

To clear a user-defined option, named `tftp-server-name`, use the command:

```
awplus(dhcp-config)# no option tftp-server-name
```

**Related commands**

dns-server

ip dhcp option

lease

service dhcp-server

show ip dhcp pool

# probe enable

**Overview**

Use this command to enable lease probing for a DHCP pool. Probing is used by the DHCP server to check if an IP address it wants to lease to a client is already being used by another host.

The **no** variant of this command disables probing for a DHCP pool.

**Syntax**

```
probe enable
no probe enable
```

**Default**

Probing is enabled by default.

**Mode**

DHCP Pool Configuration

**Examples**

To enable probing for pool P2, use the commands:

```
awplus# configure terminal
awplus(config)# ip dhcp pool P2
awplus(dhcp-config)# probe enable
```

To disable probing for pool P2, use the commands:

```
awplus# configure terminal
awplus(config)# ip dhcp pool P2
awplus(dhcp-config)# no probe enable
```

**Related commands**

ip dhcp pool

probe packets

probe timeout

probe type

show ip dhcp pool

# probe packets

**Overview**

Use this command to specify the number of packets sent for each lease probe. Lease probing is configured on a per-DHCP pool basis. When set to 0 probing is effectively disabled.

The **no** variant of this command sets the number of probe packets sent to the default of 5.

**Syntax**

```
probe packets <0-10>
no probe packets
```

| Parameter | Description |
|---|---|
| *<0-10>* | The number of probe packets sent. |

**Default**

The default is 5.

**Mode**

DHCP Pool Configuration

**Examples**

To set the number of probe packets to 2 for pool P2, use the commands:

```
awplus# configure terminal
awplus(config)# ip dhcp pool P2
awplus(dhcp-config)# probe packets 2
```

To set the number of probe packets to the default 5 for pool P2, use the commands:

```
awplus# configure terminal
awplus(config)# ip dhcp pool P2
awplus(dhcp-config)# no probe packets
```

**Related commands**

probe enable

probe timeout

probe type

show ip dhcp pool

# probe timeout

**Overview**

Use this command to set the timeout value in milliseconds that the server waits for a response after each probe packet is sent. Lease probing is configured on a per-DHCP pool basis.

The **no** variant of this command sets the probe timeout value to the default setting, 200 milliseconds.

**Syntax**

```
probe timeout <50-5000>
no probe timeout
```

| Parameter | Description |
|---|---|
| *<50-5000>* | Timeout interval in milliseconds. |

**Default**

The default timeout interval is 200 milliseconds.

**Mode**

DHCP Pool Configuration

**Examples**

To set the probe timeout value to 500 milliseconds for pool P2, use the commands:

```
awplus# configure terminal
awplus(config)# ip dhcp pool P2
awplus(dhcp-config)# probe timeout 500
```

To set the probe timeout value for pool P2 to the default, 200 milliseconds, use the commands:

```
awplus# configure terminal
awplus(config)# ip dhcp pool P2
awplus(dhcp-config)# no probe timeout
```

**Related commands**

probe enable

probe packets

probe type

show ip dhcp pool

# probe type

**Overview**

Use this command to set the probe type for a DHCP pool. The probe type specifies how the DHCP server checks whether an IP address is being used by other hosts, referred to as lease probing. If **arp** is specified, the server sends an ARP request to determine if an address is in use. If **ping** is specified, the server will send an ICMP Echo Request (ping).

The **no** variant of this command sets the probe type to the default setting, ping.

**Syntax**

```
probe type {arp|ping}
no probe type
```

| Parameter | Description |
|---|---|
| `arp` | Probe using ARP. |
| `ping` | Probe using ping. |

**Default**

The default probe type is ping.

**Mode**

DHCP Pool Configuration

**Examples**

To set the probe type to `arp` for the pool P2, use the commands:

```
awplus# configure terminal
awplus(config)# ip dhcp pool P2
awplus(dhcp-config)# probe type arp
```

To set the probe type for the pool P2 to the default, `ping`, use the commands:

```
awplus# configure terminal
awplus(config)# ip dhcp pool P2
awplus(dhcp-config)# no probe type
```

**Related commands**

ip dhcp pool

probe enable

probe packets

probe timeout

show ip dhcp pool

# range

**Overview**

This command adds an address range to the DHCP address pool you are configuring. The DHCP server responds to client requests received from the pool's network. It assigns an IP addresses within the specified range. The IP address range must lie within the network. You can add multiple address ranges and individual IP addresses for a DHCP pool by using this command multiple times.

The **no** variant of this command removes an address range from the DHCP pool. Use the **no range all** command to remove all address ranges from the DHCP pool.

**Syntax**

```
range <ip-address> [<ip-address>]
no range <ip-address> [<ip-address>]
no range all
```

| Parameter | Description |
|---|---|
| *<ip-address>* | IPv4 address range for DHCP clients, in dotted decimal notation. The first IP address is the low end of the range, the second IP address is the high end. Specify only one IP address to add an individual IP address to the address pool. |

**Mode**

DHCP Configuration

**Examples**

To add an address range of `192.0.2.5` to `192.0.2.16` to the pool `Nerv_Office`, use the command:

```
awplus# configure terminal
awplus(config)# ip dhcp pool Nerv_Office
awplus(dhcp-config)# range 192.0.2.5 192.0.2.16
```

To add the individual IP address `192.0.2.2` to a pool, use the command:

```
awplus(dhcp-config)# range 192.0.2.2
```

To remove all address ranges from a pool, use the command:

```
awplus(dhcp-config)# no range all
```

**Related commands**

ip dhcp pool

service dhcp-server

show ip dhcp pool

# route

**Overview** This command allows the DHCP server to provide static routes to clients.

**Syntax**

```
route A.B.C.D/M A.B.C.D {both|opt249|rfc3442}
```

| Parameter | Description |
|---|---|
| `A.B.C.D/M` | Subnet for the route |
| `A.B.C.D` | Next hop for the route |
| `both` | opt249 and rft3442 |
| `opt249` | Classless static route option for DHCP |
| `rfc3442` | Classless static route option for DHCP |

**Mode** DHCP Configuration

**Examples** To distribute static routes for route `0.0.0.0/0` whose next hop is `192.16.1.1` to clients using both `opt249` and `rfc3442`, use the command:

```
awplus# configure terminal
awplus(config)# ip dhcp pool pubic
awplus(dhcp-config)# route 0.0.0.0/0 192.16.1.1 both
```

**Related commands** ip dhcp pool

# service dhcp-relay

**Overview**

This command enables the DHCP Relay Agent on the device. However, on a given IP interface, no DHCP forwarding takes place until at least one DHCP server is specified to forward/relay all clients' DHCP packets to.

The **no** variant of this command disables the DHCP Relay Agent on the device for all interfaces.

**Syntax**

```
service dhcp-relay
no service dhcp-relay
```

**Mode**

Global Configuration

**Usage notes**

A maximum number of 400 DHCP Relay Agents (one per interface) can be configured on the device. Once this limit has been reached, any further attempts to configure DHCP Relay Agents will not be successful.

**Default**

The DHCP-relay service is enabled by default.

**Examples**

To enable the DHCP relay global function, use the commands:

```
awplus# configure terminal
awplus(config)# service dhcp-relay
```

To disable the DHCP relay global function, use the commands:

```
awplus# configure terminal
awplus(config)# no service dhcp-relay
```

**Related commands**

ip dhcp-relay agent-option

ip dhcp-relay agent-option checking

ip dhcp-relay information policy

ip dhcp-relay maxhops

ip dhcp-relay server-address

# service dhcp-server

**Overview**

This command enables the DHCP server on your device. The server then listens for DHCP requests on all IP interfaces. It will not run if there are no IP interfaces configured.

The **no** variant of this command disables the DHCP server.

**Syntax**

```
service dhcp-server
no service dhcp-server
```

**Mode**

Global Configuration

**Example**

To enable the DHCP server, use the commands:

```
awplus# configure terminal
awplus(config)# service dhcp-server
```

**Related commands**

ip dhcp pool

show ip dhcp server summary

subnet-mask

# short-lease-threshold

**Overview** Use this command to configure a short lease threshold.

Use the **no** variant of this command to return the short lease threshold to the default of one minute.

**Syntax**

```
short-lease-threshold <hours> <minutes>
no short-lease-threshold
```

| Parameter | Description |
|---|---|
| *<hours>* | The number of hours, from 0 to 24. |
| *<minutes>* | The number of minutes, from 0 to 60. |

**Default** 1 minute.

**Mode** DHCP Configuration

**Usage notes** DHCP leases need to be backed up in NVS so that when the DHCP server reboots or goes through a power cycle it won't lose all the knowledge of these leases.

Some networks have a high number of mobile devices repeatedly requesting DHCP leases every few seconds before their existing lease expires. This can happen for example, when mobile devices move in and out of a Wi-Fi zone or when Wi-Fi signal strength changes. This means the same IP address can have multiple lease entries which can take up unnecessary backup file space.

The **short-lease-threshold** command allows you to configure the threshold for a short lease, from 1 minute to 24 hours. Any lease less than the threshold is deemed to be a short lease and will NOT be backed up to NVS.

This is useful if you have:

- limited backup file space, and
- you don’t need to restore leases after a device reboot or power cycle

**Example** To set the short lease threshold for address pool P2 to 40 minutes, use the following commands:

```
awplus# configure terminal
awplus(config)# ip dhcp pool P2
awplus(dhcp-config)# short-lease-threshold 0 40
```

To set the short lease threshold for address pool Nerv_Office to 5 hours and 35 minutes, use the following commands:

```
awplus# configure terminal
awplus(config)# ip dhcp pool Nerv_Office
awplus(dhcp-config)# short-lease-threshold 5 35
```

To return the short lease threshold to the default of one minute, use the following commands:

```
awplus# configure terminal
awplus(config)# no short-lease-threshold
```

**Related commands**

lease

**Command changes**

Version 5.4.8-2.1: command added

# show counter dhcp-client

**Overview** This command shows counters for the DHCP client on your device.

For information on filtering and saving command output, see the "Getting Started with AlliedWare Plus" Feature Overview and Configuration Guide.

**Syntax**

```
show counter dhcp-client
```

**Mode** User Exec and Privileged Exec

**Example** To display the message counters for the DHCP client on your device, use the command:

```
awplus# show counter dhcp-client
```

**Output** Figure 54-2: Example output from the **show counter dhcp-client** command

```
show counter dhcp-client

DHCPDISCOVER out      ......... 10
DHCPREQUEST out       ......... 34
DHCPDECLINE out       ......... 4
DHCPRELEASE out       ......... 0
DHCPOFFER in          ......... 22
DHCPACK in            ......... 18
DHCPNAK in            ......... 0
```

**Table 1:** Parameters in the output of the **show counter dhcp-client** command

| Parameter | Description |
|---|---|
| DHCPDISCOVER out | The number of DHCP Discover messages sent by the client. |
| DHCPREQUEST out | The number of DHCP Request messages sent by the client. |
| DHCPDECLINE out | The number of DHCP Decline messages sent by the client. |
| DHCPRELEASE out | The number of DHCP Release messages sent by the client. |
| DHCPOFFER in | The number of DHCP Offer messages received by the client. |
| DHCPACK in | The number of DHCP Acknowledgement messages received by the client. |
| DHCPNAK in | The number of DHCP Negative Acknowledgement messages received by the client. |

**Related commands** ip address dhcp

# show counter dhcp-relay

**Overview** This command shows counters for the DHCP Relay Agent on your device.

For information on filtering and saving command output, see the "Getting Started with AlliedWare Plus" Feature Overview and Configuration Guide.

**Syntax**

```
show counter dhcp-relay
```

**Syntax (VRF-lite)**

```
show counter dhcp-relay [vrf <vrf-name>|global]
```

| Parameter | Description |
|---|---|
| `vrf` | Display the output for a VRF instance |
| `<vrf-name>` | The name of the specific VRF instance. |
| `global` | Display the output for the Global VRF instance |

**Mode** User Exec and Privileged Exec

**Examples** To display counters for the DHCP Relay Agent on your device, use the following command:

```
awplus# show counter dhcp-relay
```

**Output** Figure 54-3: Example output from the **show counter dhcp-relay** command

```
awplus#show counter dhcp-relay

DHCP relay counters
Requests In               ......... 4
Replies In                ......... 4
Relayed To Server         ......... 4
Relayed To Client         ......... 4
Out To Server Failed      ......... 0
Out To Client Failed      ......... 0
Invalid hlen              ......... 0
Bogus giaddr              ......... 0
Corrupt Agent Option      ......... 0
Missing Agent Option      ......... 0
Bad Circuit ID            ......... 0
Missing Circuit ID        ......... 0
Bad Remote ID             ......... 0
Missing Remote ID         ......... 0
Option Insert Failed      ......... 0
DHCPv6 Requests In        ......... 0
DHCPv6 Replies In         ......... 0
DHCPv6 Relayed to Server ......... 0
DHCPv6 Relayed to Client ......... 0
```

**Output (VRF-lite)**

Figure 54-4: Example output from the **show counter dhcp-relay** command for VRF instance red

```
DHCP relay counters

[VRF red]
Requests In ....................... 4
Replies In ........................ 4
Relayed To Server ................ 4
Relayed To Client ................ 4
Out To Server Failed ............. 0
Out To Client Failed ............. 0
Invalid hlen ...................... 0
Bogus giaddr ...................... 0
Corrupt Agent Option ............. 0
Missing Agent Option ............. 0
Bad Circuit ID .................... 0
Missing Circuit ID ............... 0
Option Insert Failed ............. 0
```

| Parameter | Description |
|---|---|
| Requests In | The number of DHCP Request messages received from clients. |
| Replies In | The number of DHCP Reply messages received from servers. |
| Relayed To Server | The number of DHCP Request messages relayed to servers. |
| Relayed To Client | The number of DHCP Reply messages relayed to clients. |
| Out To Server Failed | The number of failures when attempting to send request messages to servers. This is an internal debugging counter. |
| Out To Client Failed | The number of failures when attempting to send reply messages to clients. This is an internal debugging counter. |
| Invalid hlen | The number of incoming messages dropped due to an invalid hlen field. |
| Bogus giaddr | The number of incoming DHCP Reply messages dropped due to the bogus giaddr field. |
| Corrupt Agent Option | The number of incoming DHCP Reply messages dropped due to a corrupt relay agent information option field. Note that Agent Option counters only increment on errors occurring if the ip dhcp-relay agent-option command is configured for an interface. Messages generating the errors are only dropped if the ip dhcp-relay agent-option checking command is configured on the interface as well as the ip dhcp-relay agent-option command. |

| Parameter | Description |
|---|---|
| `Missing Agent Option` | The number of incoming DHCP Reply messages dropped due to a missing relay agent information option field.<br>Note that Agent Option counters only increment on errors occurring if the ip dhcp-relay agent-option command is configured for an interface. Messages generating the errors are only dropped if the ip dhcp-relay agent-option checking command is configured on the interface as well as the ip dhcp-relay agent-option command. |
| `Bad Circuit ID` | The number of incoming DHCP Reply messages dropped due to a bad circuit ID.<br>Note that Agent Option counters only increment on errors occurring if the ip dhcp-relay agent-option command is configured for an interface. Messages generating the errors are only dropped if the ip dhcp-relay agent-option checking command is configured on the interface as well as the ip dhcp-relay agent-option command |
| `Missing Circuit ID` | The number of incoming DHCP Reply messages dropped due to a missing circuit ID.<br>Note that Agent Option counters only increment on errors occurring if the ip dhcp-relay agent-option command is configured for an interface. Messages generating the errors are only dropped if the ip dhcp-relay agent-option checking command is configured on the interface as well as the ip dhcp-relay agent-option command |
| `Bad Remote ID` | The number of incoming DHCP Reply messages dropped due to a bad remote ID.<br>Note that Agent Option counters only increment on errors occurring if the ip dhcp-relay agent-option command is configured for an interface. Messages generating the errors are only dropped if the ip dhcp-relay agent-option checking command is configured on the interface as well as the ip dhcp-relay agent-option command |
| `Missing Remote ID` | The number of incoming DHCP Reply messages dropped due to a missing remote ID.<br>Note that Agent Option counters only increment on errors occurring if the ip dhcp-relay agent-option command is configured for an interface. Messages generating the errors are only dropped if the ip dhcp-relay agent-option checking command is configured on the interface as well as the ip dhcp-relay agent-option command |

| Parameter | Description |
|---|---|
| `Option Insert Failed` | The number of incoming DHCP Request messages dropped due to an error adding the DHCP Relay Agent information (option-82). This counter increments when:<br>• the DHCP Relay Agent is set to drop packets with the DHCP Relay Agent Option 82 field already filled by another DHCP Relay Agent. This policy is set with the ip dhcp-relay information policy command.<br>• there is a packet error that stops the DHCP Relay Agent from being able to append the packet with its DHCP Relay Agent Information Option (Option 82) field. |
| Note that the following parameters are only used on the Global VRF instance when DHCPv6 is running | |
| `DHCPv6 Requests In` | The number of incoming DHCPv6 Request messages. |
| `DHCPv6 Replies In` | The number of incoming DHCPv6 Reply messages. |
| `DHCPv6 Relayed to Server` | The number of DHCPv6 messages relayed to the server. |
| `DHCPv6 Relayed to Client` | The number of DHCPv6 messages relayed to the client. |

# show counter dhcp-server

**Overview** This command shows counters for the DHCP server on your device.

For information on filtering and saving command output, see the "Getting Started with AlliedWare Plus" Feature Overview and Configuration Guide.

**Syntax**

```
show counter dhcp-server
```

**Mode** User Exec and Privileged Exec

**Example** To display counters for the DHCP server on your device, use the command:

```
awplus# show counter dhcp-server
```

**Output** Figure 54-5: Example output from the **show counter dhcp-server** command

```
DHCP server counters
DHCPDISCOVER in        ......... 20
DHCPREQUEST in         ......... 12
DHCPDECLINE in         ......... 1
DHCPRELEASE in         ......... 0
DHCPINFORM in          ......... 0
DHCPOFFER out          ......... 8
DHCPACK out            ......... 4
DHCPNAK out            ......... 0
BOOTREQUEST in         ......... 0
BOOTREPLY out          ......... 0
```

**Table 2:** Parameters in the output of the **show counter dhcp-server** command

| Parameter | Description |
|---|---|
| DHCPDISCOVER in | The number of Discover messages received by the DHCP server. |
| DHCPREQUEST in | The number of Request messages received by the DHCP server. |
| DHCPDECLINE in | The number of Decline messages received by the DHCP server. |
| DHCPRELEASE in | The number of Release messages received by the DHCP server. |
| DHCPINFORM in | The number of Inform messages received by the DHCP server. |
| DHCPOFFER out | The number of Offer messages sent by the DHCP server. |
| DHCPACK out | The number of Acknowledgement messages sent by the DHCP server. |

**Table 2:** Parameters in the output of the **show counter dhcp-server** command

| Parameter | Description |
|---|---|
| `DHCPNAK out` | The number of Negative Acknowledgement messages sent by the DHCP server. The server sends these after receiving a request that it cannot fulfil because either there are no available IP addresses in the related address pool, or the request has come from a client that doesn't fit the network setting for an address pool. |
| `BOOTREQUEST in` | The number of bootp messages received by the DHCP server from bootp clients. |
| `BOOTREPLY out` | The number of bootp messages sent by the DHCP server to bootp clients. |

**Related commands**

service dhcp-server

show ip dhcp binding

show ip dhcp server statistics

show ip dhcp pool

# show dhcp lease

**Overview** This command shows details about the leases that the DHCP client has acquired from a DHCP server for interfaces on the device.

For information on filtering and saving command output, see "Controlling "show" Command Output" in the "Getting Started with AlliedWare_Plus" Feature Overview and Configuration Guide.

**Syntax** `show dhcp lease [<interface>]`

| Parameter | Description |
|---|---|
| *<interface>* | Interface name to display DHCP lease details for. |

**Mode** User Exec and Privileged Exec

**Example** To show the current lease expiry times for all interfaces, use the command:

```
awplus# show dhcp lease
```

To show the current lease for vlan1, use the command:

```
awplus# show dhcp lease vlan1
```

**Output** Figure 54-6: Example output from the **show dhcp lease vlan1** command

```
Interface vlan1
---------------------------------------------------------------
IP Address:                    192.168.22.4
Expires:                       13 Mar 2017 20:10:19
Renew:                         13 Mar 2017 18:37:06
Rebind:                        13 Mar 2017 19:49:29
Server:
Options:
  subnet-mask                  255.255.255.0
  routers                      19.18.2.100,12.16.2.17
  dhcp-lease-time              3600
  dhcp-message-type            5
  domain-name-servers          192.168.100.50,19.88.200.33
  dhcp-server-identifier       192.168.22.1
  domain-name                  alliedtelesis.com
```

**Related commands** ip address dhcp

# show ip dhcp binding

**Overview** This command shows the lease bindings that the DHCP server has allocated clients.

For information on filtering and saving command output, see the "Getting Started with AlliedWare Plus" Feature Overview and Configuration Guide.

**Syntax** `show ip dhcp binding [<ip-address>|<address-pool>]`

| Parameter | Description |
|---|---|
| *<ip-address>* | IPv4 address of a leased IP address, in dotted decimal notation. This displays the lease information for the specified IP address. |
| *<address-pool>* | Name of an address pool. This displays the lease information for all clients within the address pool. |

**Mode** User Exec and Privileged Exec

**Examples** To display all leases for every client in all address pools, use the command:

```
awplus# show ip dhcp binding
```

To display the details for the leased IP address `172.16.2.16`, use the command:

```
awplus# show ip dhcp binding 172.16.2.16
```

To display the leases from the address pool `MyPool`, use the command:

```
awplus# show ip dhcp binding MyPool
```

**Output** Figure 54-7: Example output from the **show ip dhcp binding** command

```
Pool 30_2_network Network 172.16.2.0/24
DHCP Client Entries
IP Address      ClientId                  Type           Expiry
-------------------------------------------------------------------------------
172.16.2.100    0050.fc82.9ede            Dynamic        21 Sep 2007 19:02:58
172.16.2.101    000e.a6ae.7c14            Static         Infinite
172.16.2.102    000e.a6ae.7c4c            Static         Infinite
172.16.2.103    000e.a69a.ac91            Static         Infinite
172.16.2.104    00e0.189d.5e41            Static         Infinite
172.16.2.150    00e0.2b04.5800            Static         Infinite
172.16.2.167    4444.4400.35c3            Dynamic        21 Sep 2007 14:58:41
```

**Related commands**

clear ip dhcp binding

ip dhcp pool

lease

range

service dhcp-server

show ip dhcp pool

# show ip dhcp pool

**Overview** This command displays the configuration details and system usage of the DHCP address pools configured on the device.

For information on filtering and saving command output, see the "Getting Started with AlliedWare Plus" Feature Overview and Configuration Guide.

**Syntax** `show ip dhcp pool [<address-pool>]`

| Parameter | Description |
|---|---|
| *<address-pool>* | Name of a specific address pool. This displays the configuration of the specified address pool only. |

**Mode** User Exec and Privileged Exec

**Example** `awplus# show ip dhcp pool`

**Output** Figure 54-8: Example output from the **show ip dhcp pool** command

```
Pool p1 :
  network: 192.168.1.0/24
  address ranges:
    addr: 192.168.1.10 to 192.168.1.18
  static host addresses:
    addr: 192.168.1.12     MAC addr: 1111.2222.3333
  lease <days:hours:minutes:seconds> <1:0:0:0>
  subnet mask: 255.255.255.0 (pool's network mask)
  Probe:                        Default Values
    Status:       Enabled       [Enabled]
    Type:         ARP           [Ping]
    Packets:      2             [5]
    Timeout:      200 msecs     [200]
  Dynamic addresses:
    Total:        8
    Leased:       2
    Utilization:  25.0 %
  Static host addresses:
    Total:        1
    Leased:       1
```

**Output** Figure 54-9: Example output from the **show ip dhcp pool** command with IP address 192.168.1.12 assigned to a VLAN interface on the device:

```
Pool p1 :
  network: 192.168.1.0/24
  address ranges:
    addr: 192.168.1.10 to 192.168.1.18
            (interface addr 192.168.1.12 excluded)
            (static host addr 192.168.1.12 excluded)
  static host addresses:
    addr: 192.168.1.12     MAC addr: 1111.2222.3333
            (= interface addr, so excluded)
  lease <days:hours:minutes:seconds> <1:0:0:0>
  subnet mask: 255.255.255.0 (pool's network mask)
  Probe:                        Default Values
    Status:       Enabled       [Enabled]
    Type:         ARP           [Ping]
    Packets:      2             [5]
    Timeout:      200 msecs     [200]
  Dynamic addresses:
    Total:        8
    Leased:       2
    Utilization:  25.0 %
  Static host addresses:
    Total:        1
    Leased:       1
```

**Output** Figure 54-10: Example output from the **show ip dhcp pool** command with a host with MAC 0000.cd38.05f9 is registered as a static host by DHCP Framed IP Lease feature from AUTHD:

```
Pool p1 :
  network: 10.1.1.0/24
  address ranges:
    addr: 10.1.1.101 to 10.1.1.199
            (static host addr 10.1.1.122 excluded)
            (static host addr 10.1.1.111 excluded)
  static host addresses:
    addr: 10.1.1.122       MAC addr: 0000.1111.2222
    addr: 10.1.1.111       MAC addr: 0000.cd38.05f9
                           Netmask : 255.255.255.0
                           Gateway : 10.1.1.1
                           Lease   : 60 seconds
                           Added by AUTHD
  lease  <1:0:0:0>
  subnet mask: 255.255.255.0 (pool's network mask)
  Probe:                       Default Values
    Status:       Enabled      [Enabled]
    Type:         Ping         [Ping]
    Packets:      5            [5]
    Timeout:      200 msecs    [200]
  Dynamic addresses:
    Total:        97
    Leased:       1
    Utilization:  1.0 %
  Static host addresses:
    Total:        2
    Leased:       2
```

**Table 3:** Parameters in the output of the **show ip dhcp pool** command

| Parameter | Description |
|---|---|
| Pool | Name of the pool. |
| network | Subnet and mask length of the pool. |
| address ranges | Individual IP addresses and address ranges configured for the pool. The DHCP server can offer clients an IP address from within the specified ranges only.<br>Any of these addresses that match an interface address on the device, or a static host address configured in the pool, will be automatically excluded from the range, and a message to this effect will appear beneath the range entry. |

**Table 3:** Parameters in the output of the **show ip dhcp pool** command (cont.)

| Parameter | Description |
|---|---|
| static host addresses | The static host addresses configured on the pool. Each IP address is permanently assigned to the client with the matching MAC address.<br>Any of these addresses that match an interface address on the device will be automatically excluded, and a message to this effect will appear beneath the static host entry. |
| lease <days:hours:minutes> | The lease duration for address allocated by this pool. |
| domain | The domain name sent by the pool to clients. This is the domain name that the client should use when resolving host names using DNS. |
| subnet mask | The subnet mask sent by the pool to clients. |
| Probe - Status | Whether lease probing is enabled or disabled. |
| Probe - Type | The lease probe type configured. Either ping or ARP. |
| Probe - Packets | The number of packets sent for each lease probe in the range 0 to 10. |
| Probe - Timeout | The timeout value in milliseconds to wait for a response after each probe packet is sent. In the range 50 to 5000. |
| dns servers | The DNS server addresses sent to by the pool to clients. |
| default-router(s) | The default router addresses sent by the pool to clients. |
| user-defined options | The list of user-defined options sent by the pool to clients. |
| Dynamic addresses- Total | The total number of IP addresses that have been configured in the pool for dynamic allocation to DHCP clients. |
| Dynamic addresses- Leased | The number of IP addresses in the pool that have been dynamically allocated (leased) to DHCP clients. |
| Dynamic addresses - Utilization | The percentage of IP addresses in the pool that are currently dynamically allocated to clients. |
| Static host addresses- Total | The number of static IP addresses configured in the pool for specific DHCP client hosts. |
| Static host addresses - Leased | The number of static IP addresses assigned to specific DHCP client hosts. |

**Related commands**

ip dhcp pool

probe enable

probe packets

probe timeout

probe type

range

service dhcp-server

subnet-mask

# show ip dhcp-relay

**Overview** This command shows the configuration of the DHCP Relay Agent on each interface.

For information on filtering and saving command output, see the "Getting Started with AlliedWare Plus" Feature Overview and Configuration Guide.

**Syntax**

```
show ip dhcp-relay [interface <interface-name>]
```

**Syntax (VRF-lite)**

```
show ip dhcp-relay [vrf <name>|global] [interface
<interface-name>]
```

| Parameter | Description |
|---|---|
| `<interface-name>` | Name of a specific interface. This displays the DHCP configuration for the specified interface only. |
| `vrf` | Apply this command to a VRF instance. |
| `<vrf-name>` | The name of the VRF instance. |
| `global` | The Global VRF instance. |

**Mode** User Exec and Privileged Exec

**Example** To display the DHCP Relay Agent's configuration on the interface vlan2, use the command:

```
awplus# show ip dhcp-relay interface vlan2
```

**Output** Figure 54-11: Example output from the **show ip dhcp-relay** command

```
DHCP Relay Service is enabled

vlan2 is up, line protocol is up
Maximum hop count is 10
Insertion of Relay Agent Option is disabled
Checking of Relay Agent Option is disabled
The Remote Id string for Relay Agent Option is 0000.cd28.074c
Relay information policy is to append new relay agent
information
List of servers :   192.168.1.200
```

**Output (VRF-lite)**

Figure 54-12: Example output from the **show ip dhcp-relay** command applied for VRF instance red

```
DHCP Relay Service is enabled

[VRF: red]
vlan2 is up, line protocol is up
Maximum hop count is 10
Maximum DHCP message length is 1400
Insertion of Relay Agent Option is enabled
Checking of Relay Agent Option is disabled
The Remote Id string for Relay Agent Option is 0000.cd28.074c
Relay Information policy is to replace existing relay agent
information
List of servers :   192.168.1.3
```

**Related commands**

ip dhcp-relay agent-option

ip dhcp-relay agent-option checking

ip dhcp-relay information policy

ip dhcp-relay maxhops

ip dhcp-relay server-address

**Command changes**

Version 5.4.6-2.1: VRF-lite support added.

# show ip dhcp server statistics

**Overview** This command shows statistics related to the DHCP server.

You can display the server counters using the show counter dhcp-server command as well as with this command.

For information on filtering and saving command output, see the "Getting Started with AlliedWare Plus" Feature Overview and Configuration Guide.

**Syntax**

```
show ip dhcp server statistics
```

**Mode** User Exec and Privileged Exec

**Example** To display the server statistics, use the command:

```
awplus# show ip dhcp server statistics
```

**Output** Figure 54-13: Example output from the **show ip dhcp server statistics** command

```
DHCP server counters
DHCPDISCOVER in        ......... 20
DHCPREQUEST in         ......... 12
DHCPDECLINE in         ......... 1
DHCPRELEASE in         ......... 0
DHCPINFORM in          ......... 0
DHCPOFFER out          ......... 8
DHCPACK out            ......... 4
DHCPNAK out            ......... 0
BOOTREQUEST in         ......... 0
BOOTREPLY out          ......... 0
DHCPLEASEQUERY in        ....... 0
DHCPLEASEUNKNOWN out     ....... 0
DHCPLEASEACTIVE out      ....... 0
DHCPLEASEUNASSIGNED out ....... 0
```

**Table 4:** Parameters in the output of the **show ip dhcp server statistics** command

| Parameter | Description |
|---|---|
| DHCPDISCOVER in | The number of Discover messages received by the DHCP server. |
| DHCPREQUEST in | The number of Request messages received by the DHCP server. |
| DHCPDECLINE in | The number of Decline messages received by the DHCP server. |

**Table 4:** Parameters in the output of the **show ip dhcp server statistics** command (cont.)

| Parameter | Description |
|---|---|
| `DHCPRELEASE in` | The number of Release messages received by the DHCP server. |
| `DHCPINFORM in` | The number of Inform messages received by the DHCP server. |
| `DHCPOFFER out` | The number of Offer messages sent by the DHCP server. |
| `DHCPACK out` | The number of Acknowledgement messages sent by the DHCP server. |
| `DHCPNAK out` | The number of Negative Acknowledgement messages sent by the DHCP server. The server sends these after receiving a request that it cannot fulfil because either there are no available IP addresses in the related address pool, or the request has come from a client that doesn't fit the network setting for an address pool. |
| `BOOTREQUEST in` | The number of bootp messages received by the DHCP server from bootp clients. |
| `BOOTREPLY out` | The number of bootp messages sent by the DHCP server to bootp clients. |
| `DHCPLEASEQUERY in` | The number of Lease Query messages received by the DHCP server from DHCP Relay Agents. |
| `DHCPLEASEUNKNOWN out` | The number of Lease Unknown messages sent by the DHCP server to DHCP Relay Agents. |
| `DHCPLEASEACTIVE out` | The number of Lease Active messages sent by the DHCP server to DHCP Relay Agents. |
| `DHCPLEASEUNASSIGNED out` | The number of Lease Unassigned messages sent by the DHCP server to DHCP Relay Agents. |

**Related commands**

show counter dhcp-server

service dhcp-server

show ip dhcp binding

show ip dhcp pool

# show ip dhcp server summary

**Overview**

This command shows the current configuration of the DHCP server. This includes:

- whether the DHCP server is enabled
- whether the DHCP server is configured to ignore BOOTP requests
- whether the DHCP server is configured to support DHCP lease queries
- the details of any user-defined options
- a list of the names of all DHCP address pools currently configured

This show command does not include any configuration details of the address pools. You can display these using the show ip dhcp pool command.

For information on filtering and saving command output, see the "Getting Started with AlliedWare Plus" Feature Overview and Configuration Guide.

**Syntax**

```
show ip dhcp server summary
```

**Mode**

User Exec and Privileged Exec

**Example**

To display the current configuration of the DHCP server, use the command:

```
awplus# show ip dhcp server summary
```

**Output**

Figure 54-14: Example output from the **show ip dhcp server summary** command

```
DHCP Server service is disabled
BOOTP ignore is disabled
DHCP leasequery support is disabled
Pool list: p2
```

**Related commands**

ip dhcp leasequery enable

ip dhcp pool

service dhcp-server

# subnet-mask

**Overview**

This command sets the subnet mask option for a DHCP address pool you are configuring. Use this command to specify the client's subnet mask as defined in RFC 950. This sets the subnet details using the pre-defined option 1. Note that if you create a user-defined option 1 using the option command, then you will override any settings created with this command. If you do not specify a subnet mask using this command, then the pool's network mask (specified using the next-server command) is applied.

The **no** variant of this command removes a subnet mask option from a DHCP pool. The pool reverts to using the pool's network mask.

**Syntax**

```
subnet-mask <mask>
no subnet-mask
```

| Parameter | Description |
|---|---|
| *<mask>* | Valid IPv4 subnet mask, in dotted decimal notation. |

**Mode**

DHCP Configuration

**Examples**

To set the subnet mask option to `255.255.255.0` for DHCP pool P2, use the commands:

```
awplus# configure terminal
awplus(config)# ip dhcp pool P2
awplus(dhcp-config)# subnet-mask 255.255.255.0
```

To remove the subnet mask option from DHCP pool P2, use the commands:

```
awplus# configure terminal
awplus(config)# ip dhcp pool P2
awplus(dhcp-config)# no subnet-mask
```

**Related commands**

default-router

dns-server

domain-name

next-server

option

service dhcp-server

show ip dhcp pool

# 55 DHCP for IPv6 (DHCPv6) Commands

## Introduction

**Overview**

This chapter provides an alphabetical reference for commands used to configure DHCPv6. For more information, see the DHCPv6 Feature Overview and Configuration Guide.

DHCPv6 is a network protocol used to configure IPv6 hosts with IPv6 addresses and IPv6 prefixes for an IPv6 network. DHCPv6 is used instead of SLAAC (Stateless Address Autoconfiguration) at sites where centralized management of IPv6 hosts is needed. IPv6 routers require automatic configuration of IPv6 addresses and IPv6 prefixes.

DHCPv6 Prefix Delegation provides automatic configuration of IPv6 addresses and IPv6 prefixes.

Note that DHCPv6 client does not support tunnel interface.

For information on filtering and saving command output, see the "Getting Started with AlliedWare Plus" Feature Overview and Configuration Guide.

***NOTE:*** *The IPv6 addresses shown use the address space 2001:0db8::/32, defined in RFC 3849 for documentation purposes. These addresses should not be used for practical networks (other than for testing purposes) nor should they appear on any public network.*

**Command List**


- "address prefix" on page 2928
- "address range" on page 2930
- "clear counter ipv6 dhcp-client" on page 2932
- "clear counter ipv6 dhcp-server" on page 2933
- "clear ipv6 dhcp binding" on page 2934
- "clear ipv6 dhcp client" on page 2936
- "dns-server (DHCPv6)" on page 2937
- "domain-name (DHCPv6)" on page 2939

- "ip dhcp-relay agent-option" on page 2940
- "ip dhcp-relay agent-option checking" on page 2942
- "ip dhcp-relay agent-option remote-id" on page 2944
- "ip dhcp-relay information policy" on page 2946
- "ip dhcp-relay maxhops" on page 2948
- "ip dhcp-relay max-message-length" on page 2949
- "ip dhcp-relay server-address" on page 2951
- "ipv6 address (DHCPv6 PD)" on page 2953
- "ipv6 address dhcp" on page 2956
- "ipv6 dhcp client pd" on page 2958
- "ipv6 dhcp option" on page 2960
- "ipv6 dhcp pool" on page 2962
- "ipv6 dhcp server" on page 2964
- "ipv6 local pool" on page 2965
- "ipv6 nd prefix (DHCPv6)" on page 2967
- "link-address" on page 2969
- "option (DHCPv6)" on page 2971
- "prefix-delegation pool" on page 2973
- "service dhcp-relay" on page 2975
- "show counter dhcp-relay" on page 2976
- "show counter ipv6 dhcp-client" on page 2980
- "show counter ipv6 dhcp-server" on page 2982
- "show ip dhcp-relay" on page 2984
- "show ipv6 dhcp" on page 2986
- "show ipv6 dhcp binding" on page 2987
- "show ipv6 dhcp interface" on page 2990
- "show ipv6 dhcp pool" on page 2992
- "sntp-address" on page 2994

# address prefix

**Overview** Use this command in DHCPv6 Configuration mode to specify an address prefix for address assignment with DHCPv6 server pool configuration.

Use the **no** variant of this command to remove the address prefix from the DHCPv6 server pool.

**Syntax**

```
address prefix <ipv6-prefix/prefix-length> [lifetime
{<valid-time>|infinite} {<preferred-time>|infinite}]
```

```
no address prefix <ipv6-prefix/prefix-length>
```

| Parameter | Description |
|---|---|
| *<ipv6-prefix/prefix-length>* | Specify an IPv6 prefix and prefix length. The prefix length indicates the length of the IPv6 prefix assigned to the pool. The IPv6 address uses the format X:X::X:X/Prefix-Length. The prefix-length is usually set between 0 and 64. |
| `lifetime` | Specify a time period for the hosts to remember router advertisements (RAs).<br>If you specify the optional lifetime parameter with this command then you must also specify a *valid-time* and a *preferred-time* value.<br>See the Usage notes below this parameter table for a description of preferred and valid lifetimes and how these determine deprecated or invalid IPv6 addresses upon expiry. |
| *<valid-time>* | Specify a valid lifetime in seconds in the range `<5-315360000>`.<br>The default valid lifetime is 2592000 seconds. |
| `infinite` | Specify an infinite valid lifetime or an infinite preferred lifetime, or both, when using this keyword. |
| *<preferred-time>* | Specify a preferred lifetime in seconds in the range `<5-315360000>`.<br>The default preferred lifetime is 604800 seconds. |

**Mode** DHCPv6 Configuration

**Default** The default valid lifetime is 2592000 seconds and the default preferred lifetime is 604800 seconds.

**Usage notes** This command creates a pool of prefixes from which addresses are assigned to clients on request, and allocates a network prefix from which the DHCPv6 Server leases addresses. This command is an alternative to using a range set using the address range command.

The DHCPv6 Server selects an IPv6 address from the range available allocated by the IPv6 prefix, randomly generating the suffix of the IPv6 address, with the specified preferred and valid lifetime leases. Leased IPv6 address are found in the

DHCPv6 Server REPLY packet, which is located within the IANA (Identity Association for Non-temporary Addresses) IA address field in the **REPLY** message.

Preferred IPv6 addresses or prefixes are available to interfaces for unrestricted use and are deprecated when the preferred timer expires.

Deprecated IPv6 addresses and prefixes are available for use and are discouraged but not forbidden. A deprecated address or prefix should not be used as a source address or prefix, but packets sent from deprecated addresses or prefixes are delivered as expected.

An IPv6 address or prefix becomes invalid and is not available to an interface when the valid lifetime timer expires. Invalid addresses or prefixes should not appear as the source or destination for a packet.

**Examples**

To add IPv6 address prefix `2001:0db8:1::/48` for DHCPv6 server pool configuration, use the following commands:

```
awplus# configure terminal
awplus(config)# ipv6 dhcp pool pool1
awplus(config-dhcp6)# address prefix 2001:0db8:1::/48
```

To remove a configured IPv6 address prefix for DHCPv6 server pool configuration, use the following commands:

```
awplus# configure terminal
awplus(config)# ipv6 dhcp pool pool1
awplus(config-dhcp6)# no address prefix 2001:0db8:1::/48
```

**Related commands**

address range

ipv6 dhcp pool

**Validation Commands**

show ipv6 dhcp binding

show ipv6 dhcp pool

# address range

**Overview** Use this command in DHCPv6 Configuration mode to specify an address range for address assignment with DHCPv6 server pool configuration.

Use the **no** variant of this command to remove an address range from the DHCPv6 server pool.

**Syntax**

```
address range <first-ipv6-address>
<last-ipv6-address>[lifetime {<valid-time>|infinite}
{<preferred-time>|infinite}]
```

```
no address range <first-ipv6-address> <last-ipv6-address>
```

| Parameter | Description |
|---|---|
| *<first-ipv6-address>* | Specify the first IPv6 address of the IPv6 address range, in hexadecimal notation in the format `X:X::X:X`. |
| *<last-ipv6-address>* | Specify the last IPv6 address of the IPv6 address range, in hexadecimal notation in the format `X:X::X:X`. |
| `lifetime` | Optional. Specify a time period for the hosts to remember router advertisements (RAs).<br>If you specify this parameter then you must also specify a *valid-time* and a *preferred-time* value.<br>See the Usage notes below this parameter table for a description of preferred and valid lifetimes and how these determine deprecated or invalid IPv6 addresses upon expiry. |
| *<valid-time>* | Specify a valid lifetime in seconds in the range `<5-31536000>`.<br>The default valid lifetime is 2592000 seconds. |
| `infinite` | Specify an infinite valid lifetime or an infinite preferred lifetime, or both, when using this keyword. |
| *<preferred-time>* | Specify a preferred lifetime in seconds in the range `<5-31536000>`.<br>The default preferred lifetime is 604800 seconds. |

**Default** The default valid lifetime is 2592000 seconds and the default preferred lifetime is 604800 seconds.

**Mode** DHCPv6 Configuration

**Usage** Preferred IPv6 addresses or prefixes are available to interfaces for unrestricted use and are deprecated when the preferred timer expires.

Deprecated IPv6 addresses and prefixes are available for use and are discouraged but not forbidden. A deprecated address or prefix should not be used as a source address or prefix, but packets sent from deprecated addresses or prefixes are delivered as expected.

An IPv6 address or prefix becomes invalid and is not available to an interface when the valid lifetime timer expires. Invalid addresses or prefixes should not appear as the source or destination for a packet.

**Examples**

To add the IPv6 address range `2001:0db8:1::1` to `2001:0db8:1fff::1` for DHCPv6 server pool configuration, use the following commands:

```
awplus# configure terminal
awplus(config)# ipv6 dhcp pool pool1
awplus(config-dhcp6)# address range 2001:0db8:1::1
2001:0db8:1fff::1
```

To remove a configured IPv6 address range for DHCPv6 server pool configuration, use the following commands:

```
awplus# configure terminal
awplus(config)# ipv6 dhcp pool pool1
awplus(config-dhcp6)# no address range
```

**Related commands**

address prefix

ipv6 dhcp pool

**Validation Commands**

show ipv6 dhcp binding

show ipv6 dhcp pool

# clear counter ipv6 dhcp-client

**Overview** Use this command in Privileged Exec mode to clear DHCPv6 client counters.

**Syntax**

```
clear counter ipv6 dhcp-client
```

**Mode** Privileged Exec

**Example** To clear DHCPv6 client counters, use the following command:

```
awplus# clear counter ipv6 dhcp-client
```

**Related commands** show counter ipv6 dhcp-client

# clear counter ipv6 dhcp-server

**Overview** Use this command in Privileged Exec mode to clear DHCPv6 server counters.

**Syntax**

```
clear counter ipv6 dhcp-server
```

**Mode** Privileged Exec

**Example** To clear DHCPv6 server counters, use the following command:

```
awplus# clear counter ipv6 dhcp-server
```

**Related commands** show counter ipv6 dhcp-server

# clear ipv6 dhcp binding

**Overview** Use this command in Privileged Exec mode to clear either a specific lease binding or the lease bindings as specified by the command parameters. The command will only take effect on dynamically allocated bindings, not statically configured bindings. This command clears binding entries on the DHCPv6 server binding table.

**Syntax**

```
clear ipv6 dhcp binding {ipv6 <prefix>|duid <DUID>|all|pool
<name>}
```

| Parameter | Description |
|---|---|
| `ipv6 <prefix>` | Optional. Specify the IPv6 prefix of the DHCPv6 client, in hexadecimal notation in the format `X:X::X:X`. |
| `duid <DUID>` | Specify the DUID (DHCPv6 unique ID) of the DHCPv6 client. |
| `all` | All DHCPv6 bindings. |
| `pool <name>` | Description used to identify DHCPv6 server address pool. Valid characters are any printable character. If the name contains spaces then you must enclose these in "quotation marks". |

**Mode** Privileged Exec

**Usage notes** A specific binding may be deleted by **ipv6** address or **duid** address, or several bindings may be deleted at once using **all** or **pool**.

Note that if you specify to clear the **ipv6** or **duid** address of what is actually a static DHCPv6 binding, an error message is displayed. If **all** or **pool** are specified and one or more static DHCPv6 bindings exist within those addresses, any dynamic entries within those addresses are cleared but any static entries are not cleared.

The clear ipv6 dhcp binding command is used as a server function. A binding table entry on the DHCPv6 server is automatically:

- Created whenever a prefix is delegated to a client from the configuration pool.
- Updated when the client renews, rebinds, or confirms the prefix delegation.
- Deleted when the client releases all the prefixes in the binding, all prefix lifetimes have expired, or when a user runs the clear ipv6 dhcp binding command.

If the **clear ipv6 dhcp binding** command is used with the optional IPv6 address parameter, only the binding for the specified client is deleted. If the **clear ipv6 dhcp binding** command is used without the optional IPv6 address parameter, then all automatic client bindings are deleted from the DHCPv6 bindings table.

**Example** To clear all dynamic DHCPv6 server binding entries, use the command:

```
awplus# clear ipv6 dhcp binding all
```

**Output** Figure 55-1: Example output from the **clear ipv6 dhcp binding all** command

```
awplus#clear ipv6 dhcp binding all
% Deleted 1 entries
```

**Related commands** show ipv6 dhcp binding

# clear ipv6 dhcp client

**Overview** Use this command in Privileged Exec mode to restart a DHCPv6 client on an interface.

**Syntax**

```
clear ipv6 dhcp client <interface>
```

| Parameter | Description |
|---|---|
| *<interface>* | Specify the interface name to restart a DHCPv6 client on. |

**Mode** Privileged Exec

**Example** To restart a DHCPv6 client on interface vlan1, use the following command:

```
awplus# clear ipv6 dhcp client vlan1
```

**Related commands** show ipv6 dhcp binding

# dns-server (DHCPv6)

**Overview** Use this command to add a Domain Name System (DNS) server to the DHCPv6 address pool you are configuring. You can use this command multiple times to create a list of DNS name servers available to the client. This sets the DNS server details using the pre-defined option 6. Note that if you add a user-defined option 6 using the option (DHCPv6) command, then you will override any settings created with this command.

Use the **no** variant of this command to remove either the specified DNS server or all DNS servers from the DHCPv6 pool.

**Syntax**

```
dns-server <ipv6-address>
no dns-server [<ipv6-address>]
```

| Parameter | Description |
|---|---|
| *<ipv6-address>* | Specify an IPv6 address of the DNS server, in hexadecimal notation in the format X:X::X:X. This parameter is required when adding a DNS server to the DHCPv6 address pool. All DNS servers are removed from the DHCPv6 pool if you enter the no dns-server command without this parameter. |

**Mode** DHCPv6 Configuration

**Examples** To add the DNS server with the assigned IPv6 address 2001:0db8:3000:3000::32 to the DHCPv6 server pool named P2, use the following commands:

```
awplus# configure terminal
awplus(config)# ipv6 dhcp pool P2
awplus(dhcpv6-config)# dns-server 2001:0db8:3000:3000::32
```

To remove the DNS server with the assigned IPv6 address 2001:0db8:3000:3000::32 from the DHCPv6 server pool named P2, use the following commands:

```
awplus# configure terminal
awplus(config)# ipv6 dhcp pool P2
awplus(dhcpv6-config)# no dns-server 2001:0db8:3000:3000::32
```

To remove all DNS servers from the DHCPv6 server pool named P2, use the following commands:

```
awplus# configure terminal
awplus(config)# ipv6 dhcp pool P2
awplus(dhcpv6-config)# no dns-server
```

**Related commands**

ipv6 dhcp pool

option (DHCPv6)

show ipv6 dhcp pool

# domain-name (DHCPv6)

**Overview**

Use this command in DHCPv6 Configuration mode to add a domain name to the DHCPv6 server address pool you are configuring.

Use the **no** variant of this command to remove a domain name from the address pool.

**Syntax**

```
domain-name <domain-name>
no domain-name
```

| Parameter | Description |
|---|---|
| *<domain-name>* | Specify the domain name you wish to assign the DHCPv6 server address pool. Valid characters are printable characters. If the name contains spaces then you must enclose it in "quotation marks". |

**Mode**

DHCPv6 Configuration

**Usage**

This command specifies the domain name that a client should use when resolving host names using the Domain Name System, and sets the domain name details using the pre- defined option 15. Note that if you add a user-defined option 15 using the option (DHCPv6) command, then you will override any settings created with this command.

**Examples**

To add the domain name `Engineering` to DHCPv6 server pool P2, use the commands:

```
awplus# configure terminal
awplus(config)# ipv6 dhcp pool P2
awplus(dhcpv6-config)# domain-name Engineering
```

To remove the domain name `Engineering` from DHCPv6 server pool P2, use the commands:

```
awplus# configure terminal
awplus(config)# ipv6 dhcp pool P2
awplus(dhcpv6-config)# no domain-name Engineering
```

**Related commands**

dns-server (DHCPv6)

option (DHCPv6)

show ipv6 dhcp pool

# ip dhcp-relay agent-option

**Overview**

This command enables the DHCP Relay Agent to insert the DHCP Relay Agent Information Option (Option 82) into the client-request packets that it relays to its DHCP server. This allows the DHCP Relay Agent to pass on information to the server about the network location of the client device. The DHCP Relay Agent strips the DHCP Relay Agent Option 82 field out of the DHCP server's response, so that the DHCP client never sees this field.

When the DHCP Relay Agent appends its DHCP Relay Agent Option 82 data into the packet, it first overwrites any pad options present; then if necessary, it increases the packet length to accommodate the DHCP Relay Agent Option 82 data.

The **no** variant of this command stops the DHCP Relay Agent from appending the Option 82 field onto DHCP requests before forwarding it to the server.

For DHCP Relay Agent and DHCP Relay Agent Option 82 introductory information, see the DHCP Feature Overview and Configuration Guide.

***NOTE:*** *The DHCP-relay service might alter the content of the DHCP Relay Agent Option 82 field, if the commands ip dhcp-relay agent-option and ip dhcp-relay information policy have been configured.*

**Syntax**

```
ip dhcp-relay agent-option
no ip dhcp-relay agent-option
```

**Default**

DHCP Relay Agent Information Option (Option 82) insertion is disabled by default.

**Mode**

Interface Configuration for a VLAN interface or a PPP interface.

**Usage notes**

Use this command to alter the DHCP Relay Agent Option 82 setting when your device is the first hop for the DHCP client. To limit the maximum length of the packet, use the ip dhcp-relay max-message-length command.

**Examples**

To make the DHCP Relay Agent listening on vlan2 append the DHCP Relay Agent Option 82 field, use the commands:

```
awplus# configure terminal
awplus(config)# interface vlan2
awplus(config-if)# ip dhcp-relay agent-option
```

To stop the DHCP Relay Agent from appending the DHCP Relay Agent Option 82 field on vlan2, use the commands:

```
awplus# configure terminal
awplus(config)# interface vlan2
awplus(config-if)# no ip dhcp-relay agent-option
```

To make the relay agent listening on PPP interface ppp0 append the DHCP Relay Agent Option 82 field, use the commands:

```
awplus# configure terminal
awplus(config)# interface ppp0
awplus(config-if)# ip dhcp-relay agent-option
```

To stop the relay agent from appending the DHCP Relay Agent Option 82 field on PPP interface ppp0, use the commands:

```
awplus# configure terminal
awplus(config)# interface ppp0
awplus(config-if)# no ip dhcp-relay agent-option
```

**Related commands**

ip dhcp-relay agent-option remote-id

ip dhcp-relay information policy

ip dhcp-relay max-message-length

service dhcp-relay

# ip dhcp-relay agent-option checking

**Overview**

This command enables the DHCP Relay Agent to check DHCP Relay Agent Information Option (Option 82) information in response packets returned from DHCP servers. If the information does not match the information it has for its own client (downstream) interface then the DHCP Relay Agent drops the packet. Note that ip dhcp-relay agent-option must be configured.

The DHCP Relay Agent Option 82 field is included in relayed client DHCP packets if:

- DHCP Relay Agent Option 82 is enabled (ip dhcp-relay agent-option), and
- DHCP Relay Agent is enabled on the device (service dhcp-relay)

For DHCP Relay Agent and DHCP Relay Agent Option 82 introductory information, see the DHCP Feature Overview and Configuration Guide.

**Syntax**

```
ip dhcp-relay agent-option checking
no ip dhcp-relay agent-option checking
```

**Mode**

Interface Configuration for a VLAN interface or a PPP interface.

**Examples**

To make the DHCP Relay Agent listening on vlan2 check the DHCP Relay Agent Information Option (Option 82) field, use the commands:

```
awplus# configure terminal
awplus(config)# interface vlan2
awplus(config-if)# ip dhcp-relay agent-option
awplus(config-if)# ip dhcp-relay agent-option checking
```

To stop the DHCP Relay Agent on vlan2 from checking the DHCP Relay Agent Information Option (Option 82) field, use the commands:

```
awplus# configure terminal
awplus(config)# interface vlan2
awplus(config-if)# no ip dhcp-relay agent-option checking
```

To make the relay agent listening on PPP interface ppp0 check the DHCP Relay Agent Information Option (Option 82) field, use the commands:

```
awplus# configure terminal
awplus(config)# interface ppp0
awplus(config-if)# ip dhcp-relay agent-option
awplus(config-if)# ip dhcp-relay agent-option checking
```

To stop the relay agent from checking the DHCP Relay Agent Information Option (Option 82) field on PPP interface ppp0, use the commands:

```
awplus# configure terminal
awplus(config)# interface ppp0
awplus(config-if)# no ip dhcp-relay agent-option checking
```

**Related commands**

ip dhcp-relay agent-option

ip dhcp-relay agent-option remote-id

ip dhcp-relay information policy

service dhcp-relay

# ip dhcp-relay agent-option remote-id

**Overview**

Use this command to specify the Remote ID sub-option of the DHCP Relay Agent Option 82 field the DHCP Relay Agent inserts into clients' request packets. The Remote ID identifies the device that is inserting the DHCP Relay Agent Option 82 information. If a Remote ID is not specified, the Remote ID sub-option is set to the device's MAC address.

Use the **no** variant of this command to return the Remote ID for an interface.

For DHCP Relay Agent and DHCP Relay Agent Option 82 introductory information, see the DHCP Feature Overview and Configuration Guide.

**Syntax**

```
ip dhcp-relay agent-option remote-id <remote-id>
no ip dhcp-relay agent-option remote-id
```

| Parameter | Description |
|---|---|
| *<remote-id>* | An alphanumeric (ASCII) string, 1 to 63 characters in length. Additional characters allowed are hyphen (-), underscore (_) and hash (#). Spaces are not allowed. |

**Default**

The Remote ID is set to the device's MAC address by default.

**Mode**

Interface Configuration for a VLAN interface or a PPP interface.

**Usage notes**

The Remote ID sub-option is included in the DHCP Relay Agent Option 82 field of relayed client DHCP packets if:

- DHCP Relay Agent Option 82 is enabled (ip dhcp-relay agent-option), and
- DHCP Relay Agent is enabled on the device (service dhcp-relay)

**Examples**

To set the Remote ID to myid for client DHCP packets received on vlan1, use the commands:

```
awplus# configure terminal
awplus(config)# interface vlan1
awplus(config-if)# ip dhcp-relay agent-option remote-id myid
```

To remove the Remote ID specified for vlan1, use the commands:

```
awplus# configure terminal
awplus(config)# interface vlan1
awplus(config-if)# no ip dhcp-relay agent-option remote-id
```

To set the Remote ID to myid for client DHCP packets received on PPP interface ppp0, use the commands:

```
awplus# configure terminal
awplus(config)# interface ppp0 timeslots all
awplus(config-if)# ip dhcp-relay agent-option remote-id myid
```

To remove the Remote ID specified for PPP interface ppp0, use the commands:

```
awplus# configure terminal
awplus(config)# interface ppp0 timeslots all
awplus(config-if)# no ip dhcp-relay agent-option remote-id
```

**Related commands**

ip dhcp-relay agent-option

ip dhcp-relay agent-option checking

show ip dhcp-relay

# ip dhcp-relay information policy

**Overview**

This command sets the policy for how the DHCP relay deals with packets arriving from the client that contain DHCP Relay Agent Option 82 information.

If the command **ip dhcp-relay agent-option** has not been configured, then this command has no effect at all - no alteration is made to Option 82 information in packets arriving from the client side.

However, if the command **ip dhcp-relay agent-option** has been configured, this command modifies how the DHCP relay service deals with cases where the packet arriving from the client side already contains DHCP Relay Agent Option 82 information.

This command sets the action that the DHCP relay should take when a received DHCP client request contains DHCP Relay Agent Option 82 information.

By default, the DHCP Relay Agent replaces any existing DHCP Relay Agent Option 82 field with its own DHCP Relay Agent field. This is equivalent to the functionality of the **replace** parameter.

The **no** variant of this command returns the policy to the default behavior - i.e. replacing the existing DHCP Relay Agent Option 82 field.

For DHCP Relay Agent and DHCP Relay Agent Option 82 introductory information, see the DHCP Feature Overview and Configuration Guide.

***NOTE:*** *The DHCP-relay service might alter the content of the DHCP Relay Agent Option 82 field, if the commands ip dhcp-relay agent-option and ip dhcp-relay information policy have been configured.*

**Syntax**

```
ip dhcp-relay information policy {append|drop|keep|replace}
no ip dhcp-relay information policy
```

| Parameter | Description |
|---|---|
| `append` | The DHCP Relay Agent appends the DHCP Relay Agent Option 82 field of the packet with its own DHCP Relay Agent Option 82 details. |
| `drop` | The DHCP Relay Agent discards the packet. |
| `keep` | The DHCP Relay Agent forwards the packet without altering the DHCP Relay Agent Option 82 field. |
| `replace` | The DHCP Relay Agent replaces the existing DHCP Relay Agent details in the DHCP Relay Agent Option 82 field with its own details before forwarding the packet. |

**Mode**

Interface Configuration for a VLAN interface or a PPP interface.

**Examples**

To make the DHCP Relay Agent listening on vlan2 drop any client requests that already contain DHCP Relay Agent Option 82 information, use the commands:

```
awplus# configure terminal
awplus(config)# interface vlan2
awplus(config-if)# ip dhcp-relay information policy drop
```

To reset the DHCP relay information policy to the default policy for interface vlan2, use the commands:

```
awplus# configure terminal
awplus(config)# interface vlan2
awplus(config-if)# no ip dhcp-relay information policy
```

**Related commands**

ip dhcp-relay agent-option

ip dhcp-relay agent-option checking

service dhcp-server

# ip dhcp-relay maxhops

**Overview**

This command sets the hop count threshold for discarding BOOTP messages. When the hops field in a BOOTP message exceeds the threshold, the DHCP Relay Agent discards the BOOTP message. The hop count threshold is set to 10 hops by default.

Use the **no** variant of this command to reset the hop count to the default.

For DHCP Relay Agent and DHCP Relay Agent Option 82 introductory information, see the DHCP Feature Overview and Configuration Guide.

**Syntax**

```
ip dhcp-relay maxhops <1-255>
no ip dhcp-relay maxhops
```

| Parameter | Description |
|---|---|
| *<1-255>* | The maximum hop count value. |

**Default**

The default hop count threshold is 10 hops.

**Mode**

Interface Configuration for a VLAN interface or a PPP interface.

**Example**

To set the maximum number of hops to 5 for packets received on interface vlan2, use the commands:

```
awplus# configure terminal
awplus(config)# interface vlan2
awplus(config-if)# ip dhcp-relay maxhops 5
```

**Related commands**

service dhcp-relay

# ip dhcp-relay max-message-length

**Overview**

This command applies when the device is acting as a DHCP Relay Agent and DHCP Relay Agent Option 82 insertion is enabled. It sets the maximum DHCP message length (in bytes) for the DHCP packet with its DHCP Relay Agent Option 82 data inserted. From this value it calculates the maximum packet size that it will accept at its input. Packets that arrive greater than this value will be dropped.

The **no** variant of this command sets the maximum message length to its default of 1400 bytes.

For DHCP Relay Agent and DHCP Relay Agent Option 82 introductory information, see the DHCP Feature Overview and Configuration Guide.

**Syntax**

```
ip dhcp-relay max-message-length <548-1472>
no ip dhcp-relay max-message-length
```

| Parameter | Description |
|---|---|
| *<548-1472>* | The maximum DHCP message length (this is the message header plus the inserted DHCP option fields in bytes). |

**Default**

The default is 1400 bytes.

**Mode**

Interface Configuration for a VLAN interface or a PPP interface.

**Usage notes**

When a DHCP Relay Agent (that has DHCP Relay Agent Option 82 insertion enabled) receives a request packet from a DHCP client, it will append the DHCP Relay Agent Option 82 component data, and forward the packet to the DHCP server. The DHCP client will sometimes issue packets containing pad option fields that can be overwritten with Option 82 data.

Where there are insufficient pad option fields to contain all the DHCP Relay Agent Option 82 data, the DHCP Relay Agent will increase the packet size to accommodate the DHCP Relay Agent Option 82 data. If the new (increased) packet size exceeds that defined by the **maximum-message-length** parameter, then the DHCP Relay Agent will drop the packet.

***NOTE:*** *Before setting this command, you must first run the ip dhcp-relay agent-option command. This will allow the DHCP Relay Agent Option 82 fields to be appended.*

**Example**

To set the maximum DHCP message length to 1200 bytes for packets arriving in interface vlan2, use the commands:

```
awplus# configure terminal
awplus(config)# interface vlan2
awplus(config-if)# ip dhcp-relay max-message-length 1200
```

To reset the maximum DHCP message length to the default of 1400 bytes for packets arriving in interface vlan2, use the commands:

```
awplus# configure terminal
awplus(config)# interface vlan2
awplus(config-if)# no ip dhcp-relay max-message-length
```

**Related commands**

service dhcp-relay

# ip dhcp-relay server-address

## Overview

This command adds a DHCP server for the DHCP Relay Agent to forward client DHCP packets to on a particular interface. You can add up to five DHCP servers on each device interface that the DHCP Relay Agent is listening on.

The **no** variant of this command deletes the specified DHCP server from the list of servers available to the DHCP relay agent.

The **no ip dhcp-relay** command removes all DHCP relay settings from the interface.

For DHCP Relay Agent and DHCP Relay Agent Option 82 introductory information, see the DHCP Feature Overview and Configuration Guide.

## Syntax

```
ip dhcp-relay server-address {<ipv4-address>|<ipv6-address>
<server-interface>}
```

```
no ip dhcp-relay server-address {<ipv4-address>|<ipv6-address>
<server-interface>}
```

```
no ip dhcp-relay
```

| Parameter | Description |
|---|---|
| *<ipv4-address>* | Specify the IPv4 address of the DHCP server for the DHCP Relay Agent to forward client DHCP packets to, in dotted decimal notation. The IPv4 address uses the format A.B.C.D. |
| *<ipv6-address>* | Specify the IPv6 address of the DHCPv6 server for the DHCPv6 Relay Agent to forward client DHCP packets to, in hexadecimal notation. |
| *<server-interface>* | Specify the interface name of the DHCPv6 server. It is only required for a DHCPv6 server with an IPv6 address. |

## Mode

Interface Configuration for a VLAN interface or a PPP interface.

## Usage notes

For a DHCP server with an IPv6 address you must specify the interface for the DHCP server. See examples below for configuration differences between IPv4 and IPv6 DHCP relay servers.

See also the service dhcp-relay command to enable the DHCP Relay Agent on your device. The ip dhcp-relay server-address command defines a relay destination on an interface on the device, needed by the DHCP Relay Agent to relay DHCP client packets to a DHCP server.

**Examples**

To enable the DHCP Relay Agent to relay DHCP packets on interface vlan2 to the DHCP server with the IPv4 address 192.0.2.200, use the commands:

```
awplus# configure terminal
awplus(config)# service dhcp-relay
awplus(config)# interface vlan2
awplus(config-if)# ip dhcp-relay server-address 192.0.2.200
```

To remove the DHCP server with the IPv4 address 192.0.2.200 from the list of servers available to the DHCP Relay Agent on interface vlan2, use the commands:

```
awplus# configure terminal
awplus(config)# interface vlan2
awplus(config-if)# no ip dhcp-relay server-address 192.0.2.200
```

To enable the DHCP Relay Agent on your device to relay DHCP packets on interface vlan10 to the DHCP server with the IPv6 address 2001:0db8:010d::1 on interface vlan20, use the commands:

```
awplus# configure terminal
awplus(config)# service dhcp-relay
awplus(config)# interface vlan10
awplus(config-if)# ip dhcp-relay server-address
2001:0db8:010d::1 vlan20
```

To remove the DHCP server with the IPv6 address 2001:0db8:010d::1 on interface vlan20 from the list of servers available to the DHCP Relay Agent on interface vlan10, use the commands:

```
awplus# configure terminal
awplus(config)# interface vlan10
awplus(config-if)# no ip dhcp-relay server-address
2001:0db8:010d::1 vlan20
```

To disable DHCP relay on vlan2, use the commands:

```
awplus# configure terminal
awplus(config)# interface vlan2
awplus(config-if)# no ip dhcp-relay
```

**Related commands**

service dhcp-relay

# ipv6 address (DHCPv6 PD)

**Overview** Use this command in Interface Configuration mode for a VLAN interface to append an IPv6 address suffix to the IPv6 prefix provided by a DHCPv6 Prefix Delegation (PD) server.

Use the **no** variant of this command to remove the IPv6 address assigned and disable IPv6. Note that if no global addresses are left after removing the IPv6 address then IPv6 is disabled.

**Syntax**

```
ipv6 address [<ipv6-prefix-name>] <ipv6-addr/prefix-length>
[eui64]
```

```
no ipv6 address [<ipv6-prefix-name>] <ipv6-addr/prefix-length>
[eui64]
```

| Parameter | Description |
|---|---|
| *<ipv6-prefix-name>* | The IPv6 prefix name advertised on the router advertisement message sent from the device. The IPv6 prefix name is delegated from the DHCPv6 Server configured for DHCPv6 Prefix-Delegation. |
| *<ipv6-addr/prefix-length>* | Specifies the IPv6 address to be set, for example ::1/64. The IPv6 address uses the format X:X::X:X/Prefix-Length. The prefix-length is usually set between 0 and 64. |
| `[eui64]` | EUI-64 is a method of automatically deriving the lower 64 bits of an IPv6 address, based on the switch's MAC address. |

**Mode** Interface Configuration for a VLAN or a PPP interface.

**Usage notes** When specifying the **eui64** parameter, the interface identifier of the IPv6 address is derived from the MAC address of the device.

For more information about EUI64, see the IPv6 Feature Overview and Configuration Guide.

**Examples** To configure a PD prefix named prefix1 on interface vlan1 and then add an IPv6 address, use the following commands. In this example, the prefix will be assigned from the pool on the PD client. The host portion or suffix will be ::1 for the last 64 bits:

```
awplus# configure terminal
awplus(config)# interface vlan1
awplus(config-if)# ipv6 enable
awplus(config-if)# ipv6 dhcp client pd prefix1
awplus(config-if)# ipv6 address prefix1::1/64
```

To configure a PD prefix named prefix1 on interface vlan1 and then add an IPv6 address using EUI-64 identifiers, use the following commands. In this example, the prefix will be assigned from the pool on the PD client. The host portion or suffix is created from the EUI-64 identifier of the interface for the last 64 bits:

```
awplus# configure terminal
awplus(config)# interface vlan1
awplus(config-if)# ipv6 enable
awplus(config-if)# ipv6 dhcp client pd prefix1
awplus(config-if)# ipv6 address prefix1/64 eui64
```

To assign the IPv6 address 2001:0db8::a2/48 to the VLAN interface vlan2, use the following commands:

```
awplus# configure terminal
awplus(config)# interface vlan2
awplus(config-if)# ipv6 address 2001:0db8::a2/48
```

To remove the IPv6 address 2001:0db8::a2/48 from the VLAN interface vlan2, use the following commands:

```
awplus# configure terminal
awplus(config)# interface vlan2
awplus(config-if)# no ipv6 address 2001:0db8::a2/48
```

To assign the IPv6 address to the PPP interface ppp0, use the following commands:

```
awplus# configure terminal
awplus(config)# interface ppp0
awplus(config-fr-subif)# ipv6 address 2001:0db8::a2/64
```

To remove the IPv6 address 2001:0db8::a2/64 from the PPP interface ppp0, use the following commands:

```
awplus# configure terminal
awplus(config)# interface ppp0
awplus(config-if)# no ipv6 address 2001:0db8::a2/64
```

To assign the **eui64** derived address in the prefix 2001:db8::/64 to VLAN interface vlan2, use the following commands:

```
awplus# configure terminal
awplus(config)# interface vlan2
awplus(config-if)# ipv6 address 2001:0db8::/64 eui64
```

To remove the **eui64** derived address in the prefix 2001:db8::/32 from VLAN interface vlan2, use the following commands:

```
awplus# configure terminal
awplus(config)# interface vlan2
awplus(config-if)# no ipv6 address 2001:0db8::/64 eui64
```

**Validation Commands**

show running-config

show ipv6 dhcp binding

show ipv6 interface

show ipv6 route

**Related commands**

ipv6 dhcp client pd

ipv6 dhcp pool

ipv6 local pool

ipv6 nd prefix (DHCPv6)

prefix-delegation pool

# ipv6 address dhcp

**Overview** Use this command to activate the DHCPv6 client on the interface that you are configuring. This allows the interface to use the DHCPv6 client to obtain its IPv6 configuration details from a DHCPv6 server on its connected network.

The command also enables IPv6 on the interface, which creates an EUI-64 link-local address as well as enabling RA processing and SLAAC.

Use the **no** variant of this command to stop the interface from obtaining IPv6 configuration details from a DHCPv6 server.

The DHCPv6 client supports the following IP configuration options:

- Option 1—the subnet mask for your device.
- Option 3—a list of default routers.
- Option 6 —a list of DNS servers. This list appends the DNS servers set on your device with the dns-server (DHCPv6) command.
- Option 15—a domain name used to resolve host names. This option replaces any domain name that you have set with the domain-name (DHCPv6) command.
- Option 51—lease expiration time.

**Syntax**

```
ipv6 address dhcp [default-route-to-server]
no ipv6 address dhcp
```

| Parameter | Description |
|---|---|
| `default-route-to-server` | Allow the automatic configuration of a default route to the DHCPv6 server.<br>This option is not enabled by default when you enable the DHCP client on an interface. |

**Mode** Interface Configuration for a VLAN interface, an Eth interface, an 802.1Q sub-interface, a local loopback interface, a PPP interface, a bridge, or a tunnel.

**Usage notes** Use the **default-route-to-server** option to allow the automatic configuration of a default route to the DHCPv6 server. Note that this option is not enabled by default when you enable the DHCP client on an interface.

**Examples** To set the interface vlan2 to use DHCPv6 to obtain an IPv6 address, use the commands:

```
awplus# configure terminal
awplus(config)# interface vlan2
awplus(config-if)# ipv6 enable
awplus(config-if)# ipv6 address dhcp
```

To stop the interface vlan2 from using DHCPv6 to obtain its IPv6 address, use the commands:

```
awplus# configure terminal
awplus(config)# interface vlan2
awplus(config-if)# no ipv6 address dhcp
```

To set the PPP interface ppp0 to use DHCPv6 to obtain an IPv6 address, use the commands:

```
awplus# configure terminal
awplus(config)# interface ppp0
awplus(config-if)# ipv6 address dhcp
```

To stop the PPP interface ppp0 from using DHCPv6 to obtain its IPv6 address, use the commands:

```
awplus# configure terminal
awplus(config)# interface ppp0
awplus(config-if)# no ipv6 address dhcp
```

**Related commands**

clear ipv6 dhcp client

ipv6 address

ipv6 address (DHCPv6 PD)

show ipv6 dhcp interface

show running-config

# ipv6 dhcp client pd

**Overview** Use this command in Interface Configuration mode to enable the DHCPv6 client process and enable requests for prefix delegation through the interface that you are configuring.

Use the **no** variant of this command to disable requests for prefix delegation. This is the default setting.

For further information about DHCPv6 Prefix Delegation, which is used to automate the process of assigning prefixes, see the DHCPv6 Feature Overview and Configuration Guide.

**Syntax**

```
ipv6 dhcp client pd <prefix-name> <default-route-to-server>
no ipv6 dhcp client pd
```

| Parameter | Description |
|---|---|
| *<prefix-name>* | Specify an IPv6 general prefix name. Valid characters are any printable character. If the name contains spaces then you must enclose it in "quotation marks". |
| *<default-route-to-server>* | Specify the default route to the DHCP server |

**Mode** Interface Configuration

**Default** Prefix delegation is disabled by default on an interface.

**Usage notes** Entering the **ipv6 dhcp client pd** command starts the DHCPv6 client process if not already running, and enables requests for prefix delegation through the interface on which the command is configured.

When prefix delegation is enabled and a prefix is acquired, the prefix is stored in the IPv6 prefix pool with an internal name defined by the required *<prefix-name>* placeholder parameter. The ipv6 address command can then refer to the prefixes stored in the IPv6 prefix pool.

**Examples** To enable prefix delegation with the prefix name prefix-name on the VLAN interface vlan2, use the following commands:

```
awplus# configure terminal
awplus(config)# interface vlan2
awplus(config-if)# ipv6 enable
awplus(config-if)# ipv6 dhcp client pd my-prefix-name
```

To disable prefix delegation on the VLAN interface vlan2, use the following commands:

```
awplus# configure terminal
awplus(config)# interface vlan2
awplus(config-if)# no ipv6 dhcp client pd
```

**Related commands**

ipv6 enable

clear ipv6 dhcp client

ipv6 address (DHCPv6 PD)

ipv6 nd prefix (DHCPv6)

show ipv6 dhcp binding

show ipv6 dhcp interface

# ipv6 dhcp option

**Overview** Use this command in Global Configuration mode to create a user-defined DHCPv6 option. You can then use this option when configuring a DHCPv6 server address pool, by using the option (DHCPv6) command.

Options with the same number as one of the pre-defined options override the standard option definition. The pre-defined options use the option numbers 1, 3, 6, 15, and 51.

Use the **no** variant of this command to remove either the specified user-defined option. This also removes user-defined options from the associated DHCPv6 server address pools.

**Syntax**

```
ipv6 dhcp option <1-254> [name <option-name>] [<option-type>]
no ipv6 dhcp option <1-254>|<option-name>
```

| Parameter | Description | |
|---|---|---|
| *<1-254>* | The option number of the option. Options with the same number as one of the standard options overrides the standard option definition. | |
| *<option-name>* | Option name used to identify the option. You cannot use a number as the option name. Valid characters are any printable character. If the name contains spaces then you must enclose it in "quotation marks".<br>Default: no default | |
| *<option-type>* | The option value. You must specify a value that is appropriate to the option type: | |
| | `asci` | An ASCII text string |
| | `hex` | A hexadecimal string. Valid characters are the numbers 0–9 and letters a–f. Embedded spaces are not valid. The string must be an even number of characters, from 2 and 256 characters long. |
| | `ipv6` | An IPv6 address or prefix that has hexadecimal notation in the format `HHHH:HHHH::HHHH:HHHH`. To create a list of IPv6 addresses, you must add each IPv6 address individually by using the option command multiple times. |
| | `integer` | A number from 0 to 4294967295. |
| | `flag` | A value that either sets (to 1) or unsets (to 0) a flag:<br>**true**, **on**, or **enabled** will set the flag.<br>**f alse**, **off** or **disabled** will unset the flag. |

**Mode** Global Configuration

**Examples**

To define a user-defined ASCII string option as option 66, without a name, use the following commands:

```
awplus# configure terminal
awplus(config)# ipv6 dhcp option 66 ascii
```

To define a user-defined hexadecimal string option as option 46, with the name "tcpip- node-type", use the following commands:

```
awplus# configure terminal
awplus(config)# ipv6 dhcp option 46 name tcpip-node-type hex
```

To define a user-defined IP address option as option 175, with the name `special-address`, use the following commands:

```
awplus# configure terminal
awplus(config)# ipv6 dhcp option 175 name special-address ip
```

To remove the specific user-defined option with the option number 12, use the following commands:

```
awplus# configure terminal
awplus(config)# no ipv6 dhcp option 12
```

To remove the specific user-defined option with the option name `perform-router-discovery`, use the following commands:

```
awplus# configure terminal
awplus(config)# no ipv6 dhcp option perform-router-discovery
```

**Related commands**

dns-server (DHCPv6)

domain-name (DHCPv6)

option (DHCPv6)

show ipv6 dhcp

# ipv6 dhcp pool

**Overview** Use this command in Global Configuration mode to enter the DHCPv6 Configuration mode for the DHCPv6 server pool name as specified in the required command parameter. If the name specified is not associated with an existing pool, the device will create a new pool with this name, then enter the configuration mode for the new pool.

Once you have entered the DHCPv6 configuration mode, all commands executed before the next **exit** command will apply to this pool.

You can create multiple DHCPv6 server pools on devices with multiple interfaces. This allows the device to act as a DHCPv6 server on multiple interfaces to distribute different information to clients on the different networks.

Use the **no** variant of this command to delete the specific DHCPv6 pool.

**Syntax**

```
ipv6 dhcp pool <DHCPv6-poolname>
no ipv6 dhcp pool <DHCPv6-poolname>
```

| Parameter | Description |
|---|---|
| *<DHCPv6-poolname>* | Description used to identify this DHCPv6 server pool. Valid characters are any printable character. If the name contains spaces then you must enclose it in “quotation marks”. |

**Mode** Global Configuration

**Usage** All DHCPv6 prefix pool names must be unique. IPv6 prefix pools have a similar function to IPv4 address pools. Contrary to IPv4, a block of IPv6 addresses (an IPv6 address prefix) are assigned and not single IPv6 addresses. IPv6 prefix pools are not allowed to overlap.

Once a pool is configured, it cannot be changed. To change the configuration, you must remove then recreate a IPv6 prefix pool. All IPv6 prefixes already allocated are also freed.

**Examples** To create the DHCPv6 pool named P2 and enter DHCPv6 configuration mode, use the following commands:

```
awplus# configure terminal
awplus(config)# ipv6 dhcp pool P2
awplus(config-dhcp6)#
```

To delete the DHCPv6 pool named P2, use the following commands:

```
awplus# configure terminal
awplus(config)# no ipv6 dhcp pool P2
```

**Related commands**

ipv6 local pool

option (DHCPv6)

prefix-delegation pool

show ipv6 dhcp binding

show ipv6 dhcp pool

# ipv6 dhcp server

**Overview**

Use this command in Interface Configuration mode to enable DHCPv6 server for the current IPv6 configured interface to use the specified DHCPv6 server pool name.

The DHCPv6 server service listens for DHCPv6 requests on the IPv6 configured interface. The DHCPv6 server service does not run on interfaces without IPv6 configured on them.

Use the **no** variant of this command to disable the DHCPv6 server.

**Syntax**

```
ipv6 dhcp-server [<DHCPv6-poolname>]
no ipv6 dhcp-server
```

| Parameter | Description |
|---|---|
| *<DHCPv6-poolname>* | Specify a named DHCPv6 server pool as defined with the ipv6 dhcp pool command. Valid characters are any printable character. If the name contains spaces then you must enclose it in "quotation marks". |

**Mode**

Interface Configuration

**Usage notes**

The **ipv6 dhcp server** command enables the DHCPv6 service on a specified interface using the pool for prefix delegation and configuration through the specified interface.

Note that DHCPv6 client, DHCPv6 server and DHCPv6 relay are mutually exclusive on an interface. When one of the DHCPv6 functions is enabled on an interface then another DHCPv6 function cannot be enabled on the same interface.

**Examples**

To enable the DHCPv6 server service and use the DHCPv6 pool named P2 on VLAN interface vlan2, use the following commands:

```
awplus# configure terminal
awplus(config)# interface vlan2
awplus(config-if)# ipv6 dhcp server P2
```

To disable the DHCPv6 server on VLAN interface vlan2, use the following commands:

```
awplus# configure terminal
awplus(config)# interface vlan2
awplus(config-if)# no ipv6 dhcp server
```

**Related commands**

ipv6 dhcp pool

show ipv6 dhcp binding

show ipv6 dhcp pool

# ipv6 local pool

**Overview** Use this command in Global Configuration mode to configure a local DHCPv6 server prefix delegation pool specifying a poolname and a prefix/prefix length. You can optionally exclude the locally assigned prefix from the pool with the **exclude-local-prefix** keyword.

Use the **no** variant of this command to remove a local DHCPv6 server prefix delegation pool specifying the poolname.

**Syntax**

```
ipv6 local pool <DHCPv6-poolname> <delegated-prefix-name>
<ipv6-prefix/prefix-length> <assigned-length>
[exclude-local-prefix]
```

```
no ipv6 local pool
```

| Parameter | Description |
|---|---|
| *<DHCPv6-poolname>* | Description used to identify this DHCPv6 server pool. Valid characters are any printable character. If the name contains spaces then you must enclose it in “quotation marks”. |
| *<delegated-prefix-name>* | Description used to identify the delegated prefix name from the parent PD (Prefix Delegation) server. If the name contains spaces then you must enclose it in “quotation marks”. |
| *<ipv6-prefix/prefix-length>* | Specify an IPv6 prefix and prefix length. The prefix length indicates the length of the IPv6 prefix assigned to the pool.<br>The IPv6 address uses the format X:X::X:X/Prefix-Length. The prefix-length is usually set between 0 and 64. |
| *<assigned-length>* | Specify an IPv6 prefix length assigned to the user from the pool in the range <1-128>. Note that the value of the *assigned-length* parameter entered cannot be less than or equal to the *prefix-length* parameter value entered. An assigned length must be longer than a prefix length. |
| `exclude-local-prefix` | Specify this keyword to exclude the locally assigned prefix from the pool. |

**Default** No DHCPv6 server prefix delegation pool is configured by default.

**Mode** Global Configuration

**Usage notes** All IPv6 prefix pool names must be unique. IPv6 prefix pools have a similar function to IPv4 address pools. Contrary to IPv4, a block of IPv6 addresses (an IPv6 address prefix) are assigned and not single IPv6 addresses. IPv6 prefix pools are not allowed to overlap.

Once a pool is configured, it cannot be changed. To change the configuration, you must remove then recreate a IPv6 prefix pool. All IPv6 prefixes already allocated are also freed.

**Examples**

To create a local DHCPv6 local pool named P2 with the IPv6 prefix and prefix length 2001:0db8::/32 with an assigned length of 64, use the following commands:

```
awplus# configure terminal
awplus(config)# ipv6 local pool P2 2001:0db8::/32 64
```

To remove a configured DHCPv6 local pool, use the following commands:

```
awplus# configure terminal
awplus(config)# no ipv6 local pool
```

**Related commands**

ipv6 dhcp pool

show ipv6 dhcp pool

# ipv6 nd prefix (DHCPv6)

**Overview** Use this command to specify IPv6 RA (Router Advertisement) prefix information generated from the DHCPv6 server for DHCPv6 prefix-delegation for a VLAN.

Use the **no** variant of this command to remove IPv6 RA prefix information from the DHCPv6 Server for DHCPv6 Prefix-Delegation for the interface. Use the **all** parameter with the **no** variant of this command to remove all prefix names and all prefixes for an interface.

**Syntax**

```
ipv6 nd prefix <ipv6-prefix-name>
<ipv6-prefix/length>{<valid-lifetime>|infinite}
{<preferred-lifetime>|infinite} {off-link|no-autoconfig}
```

```
no ipv6 nd prefix {<ipv6-prefix-name>|<ipv6-prefix/length>|all}
```

| Parameter | Description |
|---|---|
| *<ipv6-prefix-name>* | The IPv6 prefix name advertised on the router advertisement message sent from the device.<br>The IPv6 prefix name is delegated from the DHCPv6 Server configured for DHCPv6 Prefix-Delegation. |
| *<ipv6-prefix/length>* | The IPv6 prefix and prefix length advertised on the router advertisement message sent from the device.<br>The IPv6 address prefix uses the format X:X::/prefix-length. The prefix-length is usually set between 0 and 64. |
| *<valid-lifetime>* | The the period during which the specified IPv6 address prefix is valid. This can be set to a value between 5 and 315360000 seconds. Note that this period should be set to a value greater than that set for the prefix preferred-lifetime. See the Usage notes after this parameter table for a description of valid lifetime and how it determines invalid IPv6 addresses upon expiry. |
| `infinite` | Specifying this keyword instead of entering a value for the *<valid-lifetime>* parameter applies an infinite valid lifetime. |
| *<preferred-lifetime>* | Specifies the IPv6 prefix preferred lifetime. This is the period during which the IPv6 address prefix is considered current. Set this to a value between 0 and 315360000 seconds.<br>Note that this period should be set to a value less than that set for the prefix valid-lifetime. See the Usage notes after this parameter table for a description of preferred lifetime and how it determines deprecated IPv6 addresses upon expiry. |
| `infinite` | Specifying this keyword instead of entering a value for the *<preferred-lifetime>* parameter applies an infinite valid lifetime. |
| `off-link` | Specify the IPv6 prefix off-link flag. |
| `no-autoconfig` | Specify the IPv6 prefix no autoconfiguration flag. Setting this flag indicates that the prefix is not to be used for autoconfiguration. |
| `all` | Specify all prefix names and all prefixes are removed when used with the no variant of this command. |

**Mode** Interface Configuration for a VLAN interface or a PPP interface.

**Usage notes** This command specifies the IPv6 prefix flags that are advertised by the router advertisement message.

Preferred IPv6 addresses or prefixes are available to interfaces for unrestricted use and are deprecated when the preferred timer expires.

Deprecated IPv6 addresses and prefixes are available for use and are discouraged but not forbidden. A deprecated address or prefix should not be used as a source address or prefix, but packets sent from deprecated addresses or prefixes are delivered as expected.

An IPv6 address or prefix becomes invalid and is not available to an interface when the valid lifetime timer expires. Invalid addresses or prefixes should not appear as the source or destination for a packet.

**Examples** The following example configures the device to issue RAs (Router Advertisements) on the VLAN interface vlan2, and advertises the DHCPv6 prefix name prefix1 and the IPv6 address prefix of 2001:0db8::/32.

```
awplus# configure terminal
awplus(config)# interface vlan2
awplus(config-if)# ipv6 enable
awplus(config-if)# ipv6 dhcp client pd prefix1
awplus(config-if)# ipv6 nd prefix prefix1 2001:0db8::/32
```

The following example resets router advertisements on the VLAN interface vlan2, so the address prefix of 2001:0db8::/32 is not advertised from the device.

```
awplus# configure terminal
awplus(config)# interface vlan2
awplus(config-if)# no ipv6 nd prefix 2001:0db8::/32
```

The following example removes all prefix names and prefixes from VLAN interface vlan2:

```
awplus# configure terminal
awplus(config)# interface vlan2
awplus(config-if)# no ipv6 nd prefix all
```

**Related commands**

ipv6 address (DHCPv6 PD)

ipv6 dhcp client pd

ipv6 dhcp pool

ipv6 local pool

prefix-delegation pool

show ipv6 dhcp binding

# link-address

**Overview** Use this command in DHCPv6 Configuration mode to specify a link-address prefix within a DHCPv6 Server pool.

Note that you can only configure one link address per DHCPv6 pool. Configuring another link address in the same DHCPv6 pool overwrites the previously configured link address.

Use the **no** variant of this command to remove the link-address prefix from the DHCPv6 Server pool.

**Syntax**

```
link-address <ipv6-prefix/prefix-length>
no link-address
```

| Parameter | Description |
|---|---|
| *<ipv6-prefix/ prefix-length>* | Specify an IPv6 prefix and prefix length. The prefix length indicates the length of the IPv6 prefix assigned to the pool. The IPv6 address uses the format X:X::X:X/Prefix-Length. The prefix-length is usually set between 0 and 64. |

**Default** No DHCPv6 Server pool configuration link address prefix is configured by default.

**Mode** DHCPv6 Configuration

**Usage notes** Link addresses are configured in DHCPv6 Server address pools when there are remote clients that communicate via intermediate relay(s).

RELAY-FORW and RELAY-REPL relay packets contain the requesting link address source.

This command is used to match incoming requests from PD (Prefix Delegation) clients (received via an intermediate relay) to a configured delegation pool.

When an address on the incoming interface of the DHCPv6 server or a link address set in the incoming delegation request packet from the prefix delegation client matches the link-address prefix configured in the delegation pool, the DHCPv6 server is able to match and use the appropriate delegation pool for relayed delegation request messages.

If there is no match between incoming delegation request packets from the prefix delegation client and the link-address prefix configured in the delegation pool, the DHCPv6 Server does not delegate an IPv6 prefix to the requesting device.

The link address should be set to the network prefix where the prefix delegation client resides. The prefix delegation server will also need a forwarding path (IPv6 route) back to the network prefix where the prefix delegation client resides.

For more information, see the DHCPv6 Feature Overview and Configuration Guide.

**Examples**

To configure the IPv6 prefix and prefix length 2001:0db8:1::/48 as the link address for pool P2, use the following commands:

```
awplus# configure terminal
awplus(config)# ipv6 dhcp pool P2
awplus(config-dhcp6)# address prefix 2001:0db8:2::/48
awplus(config-dhcp6)# link-address 2001:0db8:1::/48
```

To remove the link address, use the commands:

```
awplus# configure terminal
awplus(config)# ipv6 dhcp pool P2
awplus(config-dhcp6)# no link-address
```

**Related commands**

ipv6 dhcp pool

show ipv6 dhcp pool

# option (DHCPv6)

**Overview** Use this command in DHCPv6 Configuration mode to add a user-defined option to the DHCPv6 prefix pool you are configuring. For the **hex**, **integer**, and **flag** option types, if the option already exists, the new option overwrites the existing option's value.

Use the **no** variant of this command to remove the specified user-defined option from the DHCPv6 server pool, or to remove all user-defined options from the DHCPv6 server pool.

**Syntax**

```
option [<1-254>|<option-name>] <option-value>
no option [<1-254>|<option-value>]
```

| Parameter | Description | |
|---|---|---|
| *<1-254>* | The option number of the option. Options with the same number as one of the standard options overrides the standard option definition. | |
| *<option-name>* | Option name associated with the option. | |
| *<option-value>* | The option value. You must specify a value that is appropriate to the option type: | |
| | `hex` | A hexadecimal string. Valid characters are the numbers 0–9 and letters a–f. Embedded spaces are not valid. The string must be an even number of characters, from 2 and 256 characters long. |
| | `ipv6` | An IPv6 prefix that has the hexadecimal `X:X::X:X` notation. To create a list of IPv6 prefixes, you must add each IPv6 prefix individually using this command multiple times. |
| | `integer` | A number from 0 to 4294967295. |
| | `flag` | A value of either true, on, or enabled to set the flag, or false, off or disabled to unset the flag. |

**Mode** DHCPv6 Configuration

**Usage** You must define a DHCPv6 option using the ipv6 dhcp option command before using the option (DHCPv6) command.

Note that options with an **ipv6** type can hold a list of IPv6 prefix (i.e. entries that have the`X:X::X:X` address format), so if the option already exists in the pool, then the new IP address is added to the list of existing IPv6 prefixes. Also note options with the same number as one of the pre-defined options override the standard option definition. The pre-defined options use the option numbers 1, 3, 6, 15, and 51.

**Examples**

To add the IPv6 type option named `sntp-server-addr` to the pool P2 and give the option the value `ipv6`, use the following commands:

```
awplus# configure terminal
awplus(config)# ipv6 dhcp option 22 name sntp_server_addr ipv6
awplus(config)# ipv6 dhcp pool P2
awplus(config-dhcp6)# option sntp_server_addr ipv6
```

To add the ASCII-type option named `tftp-server-name` to the pool P2 and give the option the value `server1`, use the following commands:

```
awplus# configure terminal
awplus(config)# ipv6 dhcp pool P2
awplus(config-dhcp6)# option tftp-server-name server1
```

To add the hex-type option named `tcpip-node-type` to the pool P2and give the option the value `08af`, use the following commands:

```
awplus# configure terminal
awplus(config)# ipv6 dhcp pool P2
awplus(config-dhcp6)# option tcpip-node-type 08af
```

To add multiple IP addresses for the ip-type option `175`, use the following commands:

```
awplus(config-dhcp6)# option 175 2001:0db8:3001::/64
awplus(config-dhcp6)# option 175 2001:0db8:3002::/64
awplus(config-dhcp6)# option 175 2001:0db8:3003::/64
```

To add the option `179` to a pool, and give the option the value `123456`, use the following command:

```
awplus(config-dhcp6)# option 179 123456
```

To add a user-defined flag option with the name `perform-router-discovery`, use the following command:

```
awplus(config-dhcp6)# option perform-router-discovery yes
```

To clear all user-defined options from a DHCP address pool, use the following command:

```
awplus(config-dhcp6)# no option
```

To clear a user-defined option, named `tftp-server-name`, use the following command:

```
awplus(config-dhcp6)# no option tftp-server-name
```

**Related commands**

dns-server (DHCPv6)

ipv6 dhcp option

ipv6 dhcp pool

show ipv6 dhcp pool

# prefix-delegation pool

**Overview** Use this command in DHCPv6 Configuration mode to add a DHCPv6 server prefix-delegation pool entry to the current DHCPv6 pool configuration. You must define a DHCPv6 server prefix-delegation pool using the ipv6 dhcp pool command before using this command.

Use the **no** variant of this command to remove a DHCPv6 server prefix-delegation pool from the current DHCPv6 pool configuration.

**Syntax**

```
prefix-delegation pool <DHCPv6-poolname> [lifetime
{<valid-time>|infinite} {<preferred-time>|infinite}]
no prefix-delegation pool <DHCPv6-poolname>
```

| Parameter | Description |
|---|---|
| `<DHCPv6-poolname>` | Description used to identify this DHCPv6 server pool. Valid characters are any printable character. If the name contains spaces then you must enclose it in "quotation marks". |
| `lifetime` | Optional. Specify a time period for the hosts to remember router advertisements (RAs). If you specify this parameter then you must also specify a *valid-time* and a *preferred-time* value.<br>See the Usage notes below this parameter table for a description of preferred and valid lifetimes and how these determine deprecated or invalid IPv6 addresses upon expiry. |
| `<valid-time>` | Specify a valid lifetime in seconds in the range `<5-315360000>`. |
| `infinite` | Specify an infinite valid lifetime or an infinite preferred lifetime, or both, when using this keyword. |
| `<preferred-time>` | Specify a valid lifetime in seconds in the range `<5-315360000>`. |

**Default** No IPv6 local prefix pool is specified by default.

**Mode** DHCPv6 Configuration

**Usage notes** The DHCPv6 server assigns prefixes dynamically from an IPv6 local prefix pool, which is configured using the ipv6 local pool command and is associated with a DHCPv6 configuration pool using this command. When the server receives a prefix request from a client, it attempts to obtain unassigned prefixes from the pool. After the client releases the previously assigned prefixes, the server returns the prefixes to the pool for reassignment.

Preferred IPv6 addresses or prefixes are available to interfaces for unrestricted use and are deprecated when the preferred timer expires.

Deprecated IPv6 addresses and prefixes are available for use and are discouraged but not forbidden. A deprecated address or prefix should not be used as a source

address or prefix, but packets sent from deprecated addresses or prefixes are delivered as expected.

An IPv6 address or prefix becomes invalid and is not available to an interface when the valid lifetime timer expires. Invalid addresses or prefixes should not appear as the source or destination for a packet.

**Example**

This example adds DHCPv6 Prefix Delegation pool pd_pool1 to DHCPv6 pool pool1:

```
awplus# configure terminal
awplus(config)# ipv6 local pool pd_pool1 2001:0db8::/48 56
awplus(config)# ipv6 dhcp pool pool1
awplus(config-dhcp6)# prefix-delegation pool pd_pool1
```

**Related commands**

ipv6 dhcp pool

ipv6 local pool

show ipv6 dhcp pool

# service dhcp-relay

**Overview**

This command enables the DHCP Relay Agent on the device. However, on a given IP interface, no DHCP forwarding takes place until at least one DHCP server is specified to forward/relay all clients' DHCP packets to.

The **no** variant of this command disables the DHCP Relay Agent on the device for all interfaces.

**Syntax**

```
service dhcp-relay
no service dhcp-relay
```

**Mode**

Global Configuration

**Usage notes**

A maximum number of 400 DHCP Relay Agents (one per interface) can be configured on the device. Once this limit has been reached, any further attempts to configure DHCP Relay Agents will not be successful.

**Default**

The DHCP-relay service is enabled by default.

**Examples**

To enable the DHCP relay global function, use the commands:

```
awplus# configure terminal
awplus(config)# service dhcp-relay
```

To disable the DHCP relay global function, use the commands:

```
awplus# configure terminal
awplus(config)# no service dhcp-relay
```

**Related commands**

ip dhcp-relay agent-option

ip dhcp-relay agent-option checking

ip dhcp-relay information policy

ip dhcp-relay maxhops

ip dhcp-relay server-address

# show counter dhcp-relay

**Overview** This command shows counters for the DHCP Relay Agent on your device.

For information on filtering and saving command output, see the "Getting Started with AlliedWare Plus" Feature Overview and Configuration Guide.

**Syntax**

```
show counter dhcp-relay
```

**Syntax (VRF-lite)**

```
show counter dhcp-relay [vrf <vrf-name>|global]
```

| Parameter | Description |
|---|---|
| `vrf` | Display the output for a VRF instance |
| `<vrf-name>` | The name of the specific VRF instance. |
| `global` | Display the output for the Global VRF instance |

**Mode** User Exec and Privileged Exec

**Examples** To display counters for the DHCP Relay Agent on your device, use the following command:

```
awplus# show counter dhcp-relay
```

**Output** Figure 55-2: Example output from the **show counter dhcp-relay** command

```
awplus#show counter dhcp-relay

DHCP relay counters
Requests In               ......... 4
Replies In                ......... 4
Relayed To Server         ......... 4
Relayed To Client         ......... 4
Out To Server Failed      ......... 0
Out To Client Failed      ......... 0
Invalid hlen              ......... 0
Bogus giaddr              ......... 0
Corrupt Agent Option      ......... 0
Missing Agent Option      ......... 0
Bad Circuit ID            ......... 0
Missing Circuit ID        ......... 0
Bad Remote ID             ......... 0
Missing Remote ID         ......... 0
Option Insert Failed      ......... 0
DHCPv6 Requests In        ......... 0
DHCPv6 Replies In         ......... 0
DHCPv6 Relayed to Server ......... 0
DHCPv6 Relayed to Client ......... 0
```

**Output (VRF-lite)**

Figure 55-3: Example output from the **show counter dhcp-relay** command for VRF instance red

```
DHCP relay counters

[VRF red]
Requests In ....................... 4
Replies In ........................ 4
Relayed To Server ................ 4
Relayed To Client ................ 4
Out To Server Failed ............. 0
Out To Client Failed ............. 0
Invalid hlen ...................... 0
Bogus giaddr ...................... 0
Corrupt Agent Option ............. 0
Missing Agent Option ............. 0
Bad Circuit ID .................... 0
Missing Circuit ID ............... 0
Option Insert Failed ............. 0
```

| Parameter | Description |
|---|---|
| Requests In | The number of DHCP Request messages received from clients. |
| Replies In | The number of DHCP Reply messages received from servers. |
| Relayed To Server | The number of DHCP Request messages relayed to servers. |
| Relayed To Client | The number of DHCP Reply messages relayed to clients. |
| Out To Server Failed | The number of failures when attempting to send request messages to servers. This is an internal debugging counter. |
| Out To Client Failed | The number of failures when attempting to send reply messages to clients. This is an internal debugging counter. |
| Invalid hlen | The number of incoming messages dropped due to an invalid hlen field. |
| Bogus giaddr | The number of incoming DHCP Reply messages dropped due to the bogus giaddr field. |
| Corrupt Agent Option | The number of incoming DHCP Reply messages dropped due to a corrupt relay agent information option field. Note that Agent Option counters only increment on errors occurring if the ip dhcp-relay agent-option command is configured for an interface. Messages generating the errors are only dropped if the ip dhcp-relay agent-option checking command is configured on the interface as well as the ip dhcp-relay agent-option command. |

| Parameter | Description |
|---|---|
| `Missing Agent Option` | The number of incoming DHCP Reply messages dropped due to a missing relay agent information option field.<br>Note that Agent Option counters only increment on errors occurring if the ip dhcp-relay agent-option command is configured for an interface. Messages generating the errors are only dropped if the ip dhcp-relay agent-option checking command is configured on the interface as well as the ip dhcp-relay agent-option command. |
| `Bad Circuit ID` | The number of incoming DHCP Reply messages dropped due to a bad circuit ID.<br>Note that Agent Option counters only increment on errors occurring if the ip dhcp-relay agent-option command is configured for an interface. Messages generating the errors are only dropped if the ip dhcp-relay agent-option checking command is configured on the interface as well as the ip dhcp-relay agent-option command |
| `Missing Circuit ID` | The number of incoming DHCP Reply messages dropped due to a missing circuit ID.<br>Note that Agent Option counters only increment on errors occurring if the ip dhcp-relay agent-option command is configured for an interface. Messages generating the errors are only dropped if the ip dhcp-relay agent-option checking command is configured on the interface as well as the ip dhcp-relay agent-option command |
| `Bad Remote ID` | The number of incoming DHCP Reply messages dropped due to a bad remote ID.<br>Note that Agent Option counters only increment on errors occurring if the ip dhcp-relay agent-option command is configured for an interface. Messages generating the errors are only dropped if the ip dhcp-relay agent-option checking command is configured on the interface as well as the ip dhcp-relay agent-option command |
| `Missing Remote ID` | The number of incoming DHCP Reply messages dropped due to a missing remote ID.<br>Note that Agent Option counters only increment on errors occurring if the ip dhcp-relay agent-option command is configured for an interface. Messages generating the errors are only dropped if the ip dhcp-relay agent-option checking command is configured on the interface as well as the ip dhcp-relay agent-option command |

| Parameter | Description |
|---|---|
| `Option Insert Failed` | The number of incoming DHCP Request messages dropped due to an error adding the DHCP Relay Agent information (option-82). This counter increments when:<br>• the DHCP Relay Agent is set to drop packets with the DHCP Relay Agent Option 82 field already filled by another DHCP Relay Agent. This policy is set with the ip dhcp-relay information policy command.<br>• there is a packet error that stops the DHCP Relay Agent from being able to append the packet with its DHCP Relay Agent Information Option (Option 82) field. |
| Note that the following parameters are only used on the Global VRF instance when DHCPv6 is running | |
| `DHCPv6 Requests In` | The number of incoming DHCPv6 Request messages. |
| `DHCPv6 Replies In` | The number of incoming DHCPv6 Reply messages. |
| `DHCPv6 Relayed to Server` | The number of DHCPv6 messages relayed to the server. |
| `DHCPv6 Relayed to Client` | The number of DHCPv6 messages relayed to the client. |

# show counter ipv6 dhcp-client

**Overview** Use this command in User Exec or Privilege Exec mode to show DHCPv6 client counter information. See show counter ipv6 dhcp-server for DHCPv6 server information.

For information on filtering and saving command output, see the "Getting Started with AlliedWare Plus" Feature Overview and Configuration Guide.

**Syntax**

```
show counter ipv6 dhcp-client
```

**Mode** User Exec and Privileged Exec

**Example** To display the DHCPv6 client counter information, use the command:

```
awplus# show counter ipv6 dhcp-client
```

**Output** Figure 55-4: Example output from the **show counter ipv6 dhcp-client** command

```
awplus#show counter ipv6 dhcp-client
SOLICIT out              ......... 20
ADVERTISE in             ......... 12
REQUEST out              ......... 1
CONFIRM out              ......... 0
RENEW out                ......... 0
REBIND out               ......... 0
REPLY in                 ......... 0
RELEASE out              ......... 0
DECLINE out              ......... 0
INFORMATION-REQUEST out ......... 0
```

**Table 1:** Parameters in the output of the **show counter ipv6 dhcp-client** command

| Parameter | Description |
|---|---|
| SOLICIT out | Displays the count of SOLICIT messages sent by the DHCPv6 client. |
| ADVERTISE in | Displays the count of ADVERTISE messages received by the DHCPv6 client. |
| REQUEST out | Displays the count of REQUEST messages sent by the DHCPv6 client. |
| CONFIRM out | Displays the count of CONFIRM messages sent by the DHCPv6 client. |
| RENEW out | Displays the count of RENEW messages sent by the DHCPv6 client. |

**Table 1:** Parameters in the output of the **show counter ipv6 dhcp-client** command (cont.)

| Parameter | Description |
|---|---|
| `REBIND out` | Displays the count of REBIND messages sent by the DHCPv6 client. |
| `REPLY in` | Displays the count of REPLY messages received by the DHCPv6 client. |
| `RELEASE out` | Displays the count of RELEASE messages sent by the DHCPv6 client. |
| `DECLINE out` | Displays the count of DECLINE messages sent by the DHCPv6 client. |
| `INFORMATION-REQUEST out` | Displays the count of INFORMATION-REQUEST messages sent by the DHCPv6 client. |

**Related commands**

show counter ipv6 dhcp-server

# show counter ipv6 dhcp-server

**Overview** Use this command in User Exec or Privileged Exec mode to show DHCPv6 server counter information. See show counter ipv6 dhcp-client for DHCPv6 client information.

For information on filtering and saving command output, see the "Getting Started with AlliedWare Plus" Feature Overview and Configuration Guide.

**Syntax**

```
show counter ipv6 dhcp-server
```

**Mode** User Exec and Privileged Exec

**Example** To display the DHCPv6 server counter information, use the command:

```
awplus# show counter ipv6 dhcp-server
```

**Output** Figure 55-5: Example output from the **show counter ipv6 dhcp-server** command

```
awplus#show counter ipv6 dhcp-server
SOLICIT in                ......... 20
ADVERTISE out             ......... 12
REQUEST in                ......... 1
CONFIRM in                ......... 0
RENEW in                  ......... 0
REBIND in                 ......... 0
REPLY out                 ......... 0
RELEASE in                ......... 0
DECLINE in                ......... 0
INFORMATION-REQUEST in    ......... 0
```

**Table 2:** Parameters in the output of the **show counter ipv6 dhcp-server** command

| Parameter | Description |
|---|---|
| SOLICIT in | Displays the count of SOLICIT messages received by the DHCPv6 server. |
| ADVERTISE out | Displays the count of ADVERTISE messages sent by the DHCPv6 server. |
| REQUEST in | Displays the count of REQUEST messages received by the DHCPv6 server. |
| CONFIRM in | Displays the count of CONFIRM messages received by the DHCPv6 server. |
| RENEW in | Displays the count of RENEW messages received by the DHCPv6 server. |

**Table 2:** Parameters in the output of the **show counter ipv6 dhcp-server** command (cont.)

| Parameter | Description |
|---|---|
| `REBIND in` | Displays the count of REBIND messages received by the DHCPv6 server. |
| `REPLY out` | Displays the count of REPLY messages sent by the DHCPv6 server. |
| `RELEASE in` | Displays the count of RELEASE messages received by the DHCPv6 server. |
| `DECLINE in` | Displays the count of DECLINE messages received by the DHCPv6 server. |
| `INFORMATION-REQUEST in` | Displays the count of INFORMATION-REQUEST messages received by the DHCPv6 server |

**Related commands**

show counter ipv6 dhcp-client

# show ip dhcp-relay

**Overview** This command shows the configuration of the DHCP Relay Agent on each interface.

For information on filtering and saving command output, see the "Getting Started with AlliedWare Plus" Feature Overview and Configuration Guide.

**Syntax**

```
show ip dhcp-relay [interface <interface-name>]
```

**Syntax (VRF-lite)**

```
show ip dhcp-relay [vrf <name>|global] [interface
<interface-name>]
```

| Parameter | Description |
|---|---|
| `<interface-name>` | Name of a specific interface. This displays the DHCP configuration for the specified interface only. |
| `vrf` | Apply this command to a VRF instance. |
| `<vrf-name>` | The name of the VRF instance. |
| `global` | The Global VRF instance. |

**Mode** User Exec and Privileged Exec

**Example** To display the DHCP Relay Agent's configuration on the interface vlan2, use the command:

```
awplus# show ip dhcp-relay interface vlan2
```

**Output** Figure 55-6: Example output from the **show ip dhcp-relay** command

```
DHCP Relay Service is enabled

vlan2 is up, line protocol is up
Maximum hop count is 10
Insertion of Relay Agent Option is disabled
Checking of Relay Agent Option is disabled
The Remote Id string for Relay Agent Option is 0000.cd28.074c
Relay information policy is to append new relay agent
information
List of servers :   192.168.1.200
```

**Output (VRF-lite)**

Figure 55-7: Example output from the **show ip dhcp-relay** command applied for VRF instance red

```
DHCP Relay Service is enabled

[VRF: red]
vlan2 is up, line protocol is up
Maximum hop count is 10
Maximum DHCP message length is 1400
Insertion of Relay Agent Option is enabled
Checking of Relay Agent Option is disabled
The Remote Id string for Relay Agent Option is 0000.cd28.074c
Relay Information policy is to replace existing relay agent
information
List of servers :   192.168.1.3
```

**Related commands**

ip dhcp-relay agent-option

ip dhcp-relay agent-option checking

ip dhcp-relay information policy

ip dhcp-relay maxhops

ip dhcp-relay server-address

**Command changes**

Version 5.4.6-2.1: VRF-lite support added.

# show ipv6 dhcp

**Overview**

Use this command in User Exec or Privileged Exec mode to show the DHCPv6 unique identifier (DUID) configured on your device.

For information on filtering and saving command output, see the "Getting Started with AlliedWare Plus" Feature Overview and Configuration Guide.

**Syntax**

```
show ipv6 dhcp
```

**Mode**

User Exec and Privileged Exec

**Usage notes**

The DUID is based on the link-layer address for both DHCPv6 client and DHCPv6 server identifiers. The device uses the MAC address from the lowest interface number for the DUID.

The DUID is used by a DHCPv6 client to obtain an IPv6 address from a DHCPv6 server. A DHCPv6 server compares the DUID with its database of DUIDs and sends configuration data for an IPv6 address plus the preferred and valid lease time values to a DHCPv6 client.

**Example**

To display the DUID configured on your device, use the command:

```
awplus# show ipv6 dhcp
```

**Output**

Figure 55-8: Example output from the **show ipv6 dhcp** command

```
awplus#show ipv6 dhcp
DHCPv6 Server DUID: 0001000117ab6876001577f7ba23
```

**Related commands**

ipv6 address dhcp

# show ipv6 dhcp binding

**Overview** Use this command in User Exec or Privileged Exec mode to show the IPv6 address entries that the DHCPv6 server leases to DHCPv6 clients. Note that applying this command with the optional *summary* keyword parameter displays the number of addresses per pool, but not the address or prefix entries per pool.

For information on filtering and saving command output, see the "Getting Started with AlliedWare Plus" Feature Overview and Configuration Guide.

**Syntax**

```
show ipv6 dhcp binding [summary]
```

| Parameter | Description |
|---|---|
| summary | Optional. Specify the **summary** keyword to display summarized information for DHCPv6 server leases to client nodes, displaying the number of address entries per pool, not the addresses or prefixes. |

**Mode** User Exec and Privileged Exec

**Example 1** To display the total DHCPv6 leasing address entries for all pools, use the command:

```
awplus# show ipv6 dhcp binding summary
```

**Output** Figure 55-9: Example output from the **show ipv6 dhcp binding summary** command

```
awplus# show ipv6 dhcp binding summary
Pool Name                 Number of Leased Addresses
----------------------------------------------------
ia-na1                    3
ia-pd1                    5

Total in all Pools:       8
```

**Table 3:** Parameters in the output of the **show ipv6 dhcp binding summary** command

| Parameter | Description |
|---|---|
| Pool Name | Displays a list of all the pool names. |
| Number of Leased Addresses | Displays the number of leased address entries for the pool. |
| Total in all Pools | Displays the total number of leased address entries for all pools. |

**Example 2** To display addresses, prefixes, and lifetimes for all DHCPv6 leasing entries by pool, enter:

```
awplus# show ipv6 dhcp binding
```

**Output** Figure 55-10: Example output from the **show ipv6 dhcp binding** command

```
awplus#show ipv6 dhcp binding
Pool ia-na1
 Address 2002:0:3c0::1
         client IAID 77f7ba23, DUID 0001000117c4bbb4001577f7ba23
         preferred lifetime 604800, valid lifetime 2592000
         starts  at 20 Aug 2012 18:38:29
         expires at 19 Sep 2012 18:38:29
Pool ia-pd1
 Prefix  2002:0:3c0::/42
         client IAID 77f7ba23, DUID 0001000117c4bbb4001577f7ba23
         preferred lifetime 604800, valid lifetime 2592000
         starts  at 20 Aug 2012 18:38:29
         expires at 19 Sep 2012 18:38:29
```

**Table 4:** Parameters in the output of the **show ipv6 dhcp binding** command

| Parameter | Description |
|---|---|
| `Address` | Address delegated to the indicated IAID and DUID.<br>See the IAID and DUID descriptions below for further information. |
| `Prefix` | Prefix delegated to the indicated IAID and DUID.<br>See the IAID and DUID descriptions below for further information. |
| `DUID` | DHCPv6 unique identifier (DUID) (see RFC 3315).<br>Each DHCPv6 client has as DUID. DHCPv6 servers use DUIDs to identify clients for the association of IAs (Identity Associations) with DHCPv6 clients. DHCPv6 clients use DUIDs to identify a DHCPv6 server. |
| `IAID` | Identify Association Identifier (IAID) (see RFC 3315).<br>IAIDs are identifiers for IAs (Identity Associations), where an IA is a collection of IPv6 addresses assigned to a DHCPv6 client. Each IA has an associated IAD. Each DHCPv6 client may have more than one IA assigned to it. Each IA holds one type of address. |
| `preferred lifetime` | The preferred lifetime setting in seconds for the specified IAID and DUID. Preferred IPv6 addresses or prefixes are available to interfaces for unrestricted use and are deprecated when the preferred timer expires. Deprecated IPv6 addresses and prefixes are available for use and are discouraged but not forbidden. A deprecated address or prefix should not be used as a source address or prefix, but packets sent from deprecated addresses or prefixes are delivered as expected. |
| `valid lifetime` | The valid lifetime setting in seconds for the specified IAID and DUID. An IPv6 address or prefix becomes invalid and is not available to an interface when the valid lifetime timer expires. Invalid addresses or prefixes should not appear as the source or destination for a packet. |

**Table 4:** Parameters in the output of the **show ipv6 dhcp binding** command

| Parameter | Description |
|---|---|
| `starts at` | The date and time at which the valid lifetime expires. |
| `expires at` | The date and time at which the valid lifetime expires. |

**Related commands**

clear ipv6 dhcp binding

ipv6 dhcp pool

show ipv6 dhcp pool

# show ipv6 dhcp interface

**Overview** Use this command in User Exec or Privileged Exec mode to display DHCPv6 information for a specified interface, or all interfaces when entered without the interface parameter.

For information on filtering and saving command output, see the "Getting Started with AlliedWare Plus" Feature Overview and Configuration Guide.

**Syntax**

```
show ipv6 dhcp interface [<interface-name>]
```

| Parameter | Description |
|---|---|
| *<interface-name>* | Optional. Specify the name of the interface to show DHCPv6 information about. Omit this optional parameter to display DHCPv6 information for all interfaces DHCPv6 is configured on. |

**Mode** User Exec and Privileged Exec

**Example** To display DHCPv6 information for all interfaces DHCPv6 is configured on, use the command:

```
awplus# show ipv6 dhcp interface
```

**Output** Figure 55-11: Example output from the **show ipv6 dhcp interface** command

```
awplus# show ipv6 dhcp interface
vlan1 is in client mode
 Address 1001::3c0:1
         preferred lifetime 9000, valid lifetime 5000
         starts  at 20 Jan 2012 09:21:35
         expires at 20 Jan 2012 10:25:32
```

**Example 2** To display DHCPv6 information for interface vlan2, use the command:

```
awplus# show ipv6 dhcp interface vlan2
```

**Output** Figure 55-12: Example output from the **show ipv6 dhcp interface** command for a specific interface

```
awplus# show ipv6 dhcp interface vlan2
vlan2 is in client (Prefix-Delegation) mode
 Prefix name pd1
         prefix 2002:0:3c0::/42
         preferred lifetime 604800, valid lifetime 2592000
         starts  at 20 Aug 2012 09:21:33
         expires at 19 Sep 2012 09:21:33
```

**Table 5:** Parameters in the output of the **show counter dhcp-client** command

| Parameter | Description |
|---|---|
| `<interface> is in server/client/(Prefix-Delegation) mode` | Displays whether the specified interface is in server or client mode and whether prefix-delegation is applied to an interface. |
| `Address` | Displays the address of the DHCPv6 server on the interface. |
| `Prefix name` | Displays the IPv6 general prefix pool name, where prefixes are stored for the interface. |
| `Using pool` | Displays the name of the pool used by the interface. |
| `Preference` | Displays the preference value for the DHCPv6 server. |

**Related commands**

ipv6 dhcp client pd

# show ipv6 dhcp pool

**Overview** Use this command in User Exec or Privileged Exec mode to display the configuration details and system usage of the DHCPv6 address pools configured on the device.

For information on filtering and saving command output, see the "Getting Started with AlliedWare Plus" Feature Overview and Configuration Guide.

**Syntax** `show ipv6 dhcp pool [<DHCPv6-address-pool-name>]`

| Parameter | Description |
|---|---|
| *<DHCPv6-address-pool-name>* | Name of a specific DHCPv6 address pool. This displays the configuration of the specified DHCPv6 address pool only. |

**Mode** User Exec and Privileged Exec

**Example** `awplus# show ipv6 dhcp pool`

**Output** Figure 55-13: Example output from the **show ipv6 dhcp pool** command

```
awplus# show ipv6 dhcp pool
DHCPv6 Pool: ia-na
 Address Prefix   : 1001::/64
         Lifetime: 2592000(valid), 604800(preferred)
 DNS Server: 2001::1
 DNS Server: 2001::2
 Domain Name: example.com
 Domain Name: example.co.jp
 SNTP Server: 2001::5
 SNTP Server: 2001::6
 Option Code : 150
        Value: [ASCII] test-test
DHCPv6 Pool: ia-pd
 PD Pool Name: pd1
    Prefix    : 2002::/38-42
    Lifetime : 2592000(valid), 604800(preferred)
```

**Table 6:** Parameters in the output of the **show ipv6dhcp pool** command

| Parameter | Description |
|---|---|
| DHCPv6 Pool | Name of the DHCPv6 pool. |
| Address Prefix | Address prefix to the DHCPv6 pool. |

**Table 6:** Parameters in the output of the **show ipv6dhcp pool** command (cont.)

| Parameter | Description |
|---|---|
| `Address Lifetime` | Valid and preferred lifetimes to the DHCPv6 pool.<br>Preferred IPv6 addresses or prefixes are available to interfaces for unrestricted use and are deprecated when the preferred timer expires.<br>Deprecated IPv6 addresses and prefixes are available for use and are discouraged but not forbidden. A deprecated address or prefix should not be used as a source address or prefix, but packets sent from deprecated addresses or prefixes are delivered as expected.<br>An IPv6 address or prefix becomes invalid and is not available to an interface when the valid lifetime timer expires. Invalid addresses or prefixes should not appear as the source or destination for a packet. |
| `DNS Server` | IPv6 address of the DNS Server |
| `Domain name` | URL for the domain name. |
| `SNTP Server` | IPv6 address of the SNTP (Simple Network Time Protocol) Server. |
| `Option Code` | DHCP Option code (see RFC 2132). |
| `Option Value` | DHCP Option value type (see RFC 2132). |

**Related commands** ipv6 dhcp pool

# sntp-address

**Overview** Use this command in DHCPv6 Configuration mode to add an SNTP Server IPv6 address to a DHCPv6 Server pool.

Use the **no** variant of this command to remove an SNTP Server IPv6 address from a DHCPv6 Server pool.

**Syntax**

```
sntp-address <ipv6-address>
no sntp-address <ipv6-address>
```

| Parameter | Description |
|---|---|
| *<ipv6-address>* | Specify an SNTP Server IPv6 address, in hexadecimal notation in the format X:X::X:X. |

**Mode** DHCPv6 Configuration

**Examples** The following example adds an SNTP Server IPv6 address of 2001:0db8::/32 to the DHCPv6 pool named P2:

```
awplus# configure terminal
awplus(config)# ipv6 dhcp pool P2
awplus(config-dhcp6)# sntp-address 2001:0db8::/32
```

The following example removes an SNTP Server IPv6 address of 2001:0db8::/32 to the DHCPv6 pool named P2:

```
awplus# configure terminal
awplus(config)# ipv6 dhcp pool P2
awplus(config-dhcp6)# no sntp-address 2001:0db8::/32
```

**Related commands**

dns-server (DHCPv6)

domain-name (DHCPv6)

option (DHCPv6)

show ipv6 dhcp pool

# 56 NTP Commands

## Introduction

**Overview**

This chapter provides an alphabetical reference for commands used to configure the Network Time Protocol (NTP). For more information, see the NTP Feature Overview and_Configuration Guide.

The device can act as an NTP client to receive time from one or more NTP servers, and as an NTP server.

For information on filtering and saving command output, see the "Getting Started with AlliedWare_Plus" Feature Overview and Configuration Guide.

**Command List**


- "ntp authentication-key" on page 2996
- "ntp broadcastdelay" on page 2997
- "ntp master" on page 2998
- "ntp peer" on page 2999
- "ntp rate-limit" on page 3001
- "ntp restrict" on page 3002
- "ntp server" on page 3004
- "ntp source" on page 3006
- "show ntp associations" on page 3008
- "show ntp counters" on page 3010
- "show ntp counters associations" on page 3011
- "show ntp status" on page 3012

# ntp authentication-key

**Overview**

This command defines each of the authentication keys. Each key has a key number, a type (MD5 or SHA1), and a value.

The **no** variant of this disables the authentication key.

**Syntax**

```
ntp authentication-key <keynumber> md5 <key-string> [trusted]
ntp authentication-key <keynumber> sha1 <key-string> [trusted]
no ntp authentication-key <keynumber>
```

| Parameter | Description |
|---|---|
| `<keynumber>` | *<1-4294967295>* An identification number for the key. |
| `md5` | Define an MD5 key. |
| `sha1` | Define an SHA1 key. |
| `<key-string>` | The authentication key. For SHA1, this is a 20 hexadecimal character string. For MD5, this is a string of up to 31 ASCII characters. |
| `trusted` | Add this key to the list of authentication keys that this server trusts. |

**Mode**

Global Configuration

**Examples**

To define an MD5 authentication key number 134343 and a key value 'mystring', use the commands:

```
awplus# configure terminal
awplus(config)# ntp authentication-key 134343 md5 mystring
```

To disable the authentication key number 134343 with the key value 'mystring', use the commands:

```
awplus# configure terminal
awplus(config)# no ntp authentication-key 134343
```

**Command changes**

Version 5.4.9-2.1 sha1-encrypted parameter added.

# ntp broadcastdelay

**Overview** Use this command to set the estimated round-trip delay for broadcast packets.

Use the **no** variant of this command to reset the round-trip delay for broadcast packets to the default offset of `0` microseconds.

**Syntax**

```
ntp broadcastdelay <delay>
no ntp broadcastdelay
```

| Parameter | Description |
|---|---|
| *<delay>* | *<1-999999>* The broadcast delay in microseconds. |

**Default** `0` microsecond offset, which can only be applied with the **no** variant of this command.

**Mode** Global Configuration

**Examples** To set the estimated round-trip delay to 23464 microseconds for broadcast packets, use these commands:

```
awplus# configure terminal
awplus(config)# ntp broadcastdelay 23464
```

To reset the estimated round-trip delay for broadcast packets to the default setting (`0` microseconds), use these commands:

```
awplus# configure terminal
awplus(config)# no ntp broadcastdelay
```

# ntp master

**Overview** Use this command to make the device to be an authoritative NTP server, even if the system is not synchronized to an outside time source.

Use the **no** variant of this command to stop the device being the designated NTP server.

**Syntax**

```
ntp master [<stratum>]
no ntp master
```

| Parameter | Description |
|---|---|
| *<stratum>* | *<1-15>* The stratum number defines the configured level that is set for this master within the NTP hierarchy. The default stratum number is 12. |

**Mode** Global Configuration

**Usage notes** The stratum levels define the distance from the reference clock and exist to prevent cycles in the hierarchy. Stratum 1 is used to indicate time servers, which are more accurate than Stratum 2 servers. For more information on the Network Time Protocol go to: www.ntp.org

**Examples** To stop the device from being the designated NTP server, use the commands:

```
awplus# configure terminal
awplus(config)# no ntp master
```

To make the device the designated NTP server with stratum number 2, use the commands:

```
awplus# configure terminal
awplus(config)# ntp master 2
```

# ntp peer

**Overview** Use this command to configure an NTP peer association. An NTP association is a peer association if this system is willing to either synchronize to the other system, or allow the other system to synchronize to it.

Use the **no** variant of this command to remove the configured NTP peer association.

**Syntax**

```
ntp peer {<peeraddress>|<peername>}
ntp peer {<peeraddress>|<peername>} [prefer] [key <key>]
[version <version>]
no ntp peer {<peeraddress>|<peername>}
```

| Parameter | Description |
|---|---|
| *<peeraddress>* | Specify the IP address of the peer, entered in the form A.B.C.D for an IPv4 address, or in the form X:X::X:X for an IPv6 address. |
| *<peername>* | Specify the peer hostname. The peer hostname can resolve to an IPv4 and an IPv6 address. |
| `prefer` | Prefer this peer when possible. |
| `key <key>` | *<1-4294967295>*<br>Configure the peer authentication key. |
| `version <version>` | *<1-4>*<br>Configure for this NTP version. |

**Mode** Global Configuration

**Examples** See the following commands for options to configure NTP peer association, key and NTP version for the peer with an IPv4 address of `192.0.2.23`:

```
awplus# configure terminal
awplus(config)# ntp peer 192.0.2.23
awplus(config)# ntp peer 192.0.2.23 prefer
awplus(config)# ntp peer 192.0.2.23 prefer version 4
awplus(config)# ntp peer 192.0.2.23 prefer version 4 key 1234
awplus(config)# ntp peer 192.0.2.23 version 4 key 1234
awplus(config)# ntp peer 192.0.2.23 version 4
awplus(config)# ntp peer 192.0.2.23 key 1234
```

To remove an NTP peer association for this peer with an IPv4 address of `192.0.2.23`, use the following commands:

```
awplus# configure terminal
awplus(config)# no ntp peer 192.0.2.23
```

See the following commands for options to configure NTP peer association, key and NTP version for the peer with an IPv6 address of `2001:0db8:010d::1`:

```
awplus# configure terminal
awplus(config)# ntp peer 2001:0db8:010d::1
awplus(config)# ntp peer 2001:0db8:010d::1 prefer
awplus(config)# ntp peer 2001:0db8:010d::1 prefer version 4
awplus(config)# ntp peer 2001:0db8:010d::1 prefer version 4 key 1234
awplus(config)# ntp peer 2001:0db8:010d::1 version 4 key 1234
awplus(config)# ntp peer 2001:0db8:010d::1 version 4
awplus(config)# ntp peer 2001:0db8:010d::1 key 1234
```

To remove an NTP peer association for this peer with an IPv6 address of `2001:0db8:010d::1`, use the following commands:

```
awplus# configure terminal
awplus(config)# no ntp peer 2001:0db8:010d::1
```

**Related commands**

ntp server

ntp source

# ntp rate-limit

**Overview** Use this command to enable NTP server response rate-limiting. Limiting NTP server responses can reduce network traffic when occurrences such as misconfigured or broken NTP clients poll the NTP server too frequently. Excessive polling can lead to network overload.

Use the **no** variant of this command to remove the rate-limit configuration.

**Syntax**

```
ntp rate-limit {interval<1-4096>|burst <1-255>|leak <2-16>}
no ntp rate-limit
```

| Parameter | Description |
|---|---|
| `interval` | The minimum interval between responses configured in seconds. The default interval is 8 seconds. |
| `burst` | The maximum number of responses that can be sent in a burst, temporarily exceeding the limit specified by the interval option. The default burst is 8 responses. |
| `leak` | The rate at which responses are randomly allowed even if the limits specified by the interval and burst options are exceeded. The default leak is 4, i.e. on average, every fourth request has a response. |

**Mode** Global Configuration

**Default** Interval - 8 seconds.

Burst - 8 responses.

Leak - 4.

**Example** To configure an NTP rate-limiting interval of 30 seconds, use the following commands:

```
awplus# configure terminal
awplus(config)# ntp rate-limit interval 30
```

**Related commands** ntp restrict

**Command changes** Version 5.4.8-1.1: command added

# ntp restrict

**Overview** Use this command to configure a restriction (allow or deny) on NTP packets or NTP functionality for a specific host/network or all hosts of a given IP family.

This means you can control host access to NTP service and NTP server status queries.

Use the **no** variant of this command to remove a restriction from one or more hosts.

**Syntax**

```
ntp restrict
{default-v4|default-v6|<host-address>|<host-subnet>}
{allow|deny}
```

```
ntp restrict
{default-v4|default-v6|<host-address>|<host-subnet>} query
{allow|deny}
```

```
ntp restrict
{default-v4|default-v6|<host-address>|<host-subnet>} serve
{allow|deny}
```

```
no ntp restrict
{default-v4|default-v6|<host-address>|<host-subnet>}
```

| Parameter | Description |
|---|---|
| default-v4 | Apply this restriction to all IPv4 hosts. |
| default-v6 | Apply this restriction to all IPv6 hosts. |
| <host-address> | Apply this restriction to the specified IPv4 or IPv6 host.<br>Enter an IPv4 address in the format A.B.C.D.<br>Enter an IPv6 address in the format X:X::X:X. |
| <host-subnet> | Apply this restriction to the specified IPv4 subnet or IPv6 prefix.<br>Enter an IPv4 subnet in the format A.B.C.D/M.<br>Enter an IPv6 prefix in the format X:X::X:X/X. |
| query | Control NTP server status queries to matching hosts. |
| serve | Control NTP time service to matching hosts. |
| allow | Allow the configured restriction. |
| deny | Deny the configured restriction. |

**Default** By default, time service is allowed to all hosts, and NTP server status querying is denied to all hosts.

**Mode** Global Configuration

**Example**

To prevent all IPv4 hosts from accessing a device for NTP service, use the commands:

```
awplus# configure terminal
awplus(config)# ntp restrict default-v4 deny
```

To prevent the host 192.168.1.1 from accessing a device for NTP service, use the commands:

```
awplus# configure terminal
awplus(config)# ntp restrict 198.168.1.1 deny
```

To allow all hosts in the 10.10.10.0/24 subnet to access a device for NTP server status, use the commands:

```
awplus# configure terminal
awplus(config)# ntp restrict 10.10.10.0/24 query allow
```

**Related commands**

ntp rate-limit

**Command changes**

Version 5.4.8-1.1: command added

# ntp server

**Overview** Use this command to configure an NTP server. This means that this system will synchronize to the other system, and not vice versa.

Use the **no** variant of this command to remove the configured NTP server.

**Syntax**

```
ntp server {<serveraddress>|<servername>}
ntp server {<serveraddress>|<servername>} [prefer] [key <key>]
[version <version>]
no ntp server {<serveraddress>|<servername>}
```

| Parameter | Description |
|---|---|
| *<serveraddress>* | Specify the IP address of the peer, entered in the form A.B.C.D for an IPv4 address, or in the form X:X::X.X for an IPv6 address. |
| *<servername>* | Specify the server hostname. The server hostname can resolve to an IPv4 and an IPv6 address. |
| prefer | Prefer this server when possible. |
| key *<key>* | *<1-4294967295>*<br>Configure the server authentication key. |
| version *<version>* | *<1-4>*<br>Configure for this NTP version. |

**Mode** Global Configuration

**Examples** See the following commands for options to configure an NTP server association, key and NTP version for the server with an IPv4 address of 192.0.1.23:

```
awplus# configure terminal
awplus(config)# ntp server 192.0.1.23
awplus(config)# ntp server 192.0.1.23 prefer
awplus(config)# ntp server 192.0.1.23 prefer version 4
awplus(config)# ntp server 192.0.1.23 prefer version 4 key 1234
awplus(config)# ntp server 192.0.1.23 version 4 key 1234
awplus(config)# ntp server 192.0.1.23 version 4
awplus(config)# ntp server 192.0.1.23 key 1234
```

To remove an NTP peer association for this peer with an IPv4 address of 192.0.1.23, use the commands:

```
awplus# configure terminal
awplus(config)# no ntp server 192.0.1.23
```

See the following commands for options to configure an NTP server association, key and NTP version for the server with an IPv6 address of 2001:0db8:010e::2:

```
awplus# configure terminal
awplus(config)# ntp server 2001:0db8:010e::2
awplus(config)# ntp server 2001:0db8:010e::2 prefer
awplus(config)# ntp server 2001:0db8:010e::2 prefer version 4
awplus(config)# ntp server 2001:0db8:010e::2 prefer version 4
key 1234
awplus(config)# ntp server 2001:0db8:010e::2 version 4 key 1234
awplus(config)# ntp server 2001:0db8:010e::2 version 4
awplus(config)# ntp server 2001:0db8:010e::2 key 1234
```

To remove an NTP peer association for this peer with an IPv6 address of 2001:0db8:010e::2, use the commands:

```
awplus# configure terminal
awplus(config)# no ntp server 2001:0db8:010e::2
```

**Related commands**

ntp peer

ntp source

# ntp source

**Overview** Use this command to configure an IPv4 or an IPv6 address for the NTP source interface. This command defines the socket used for NTP messages, and only applies to NTP client behavior.

Note that you cannot use this command when using AMF (Allied Telesis Management Framework).

Use the **no** variant of this command to remove the configured IPv4 or IPv6 address from the NTP source interface.

**Syntax**

```
ntp source <source-address>
no ntp source
```

| Parameter | Description |
|---|---|
| *<source-address>* | Specify the IP address of the NTP source interface, entered in the form A.B.C.D for an IPv4 address, or in the form X:X::X.X for an IPv6 address. |

**Default** An IP address is selected based on the most appropriate egress interface used to reach the NTP peer if a configured NTP client source IP address is unavailable or invalid.

**Mode** Global Configuration

**Usage notes** Adding an IPv4 or an IPv6 address allows you to select which source interface NTP uses for peering. The IPv4 or IPv6 address configured using this command is matched to the interface.

When selecting a source IP address to use for NTP messages to the peer, if the configured NTP client source IP address is unavailable then default behavior will apply, and an alternative source IP address is automatically selected. This IP address is based on the most appropriate egress interface used to reach the NTP peer. The configured NTP client source IP may be unavailable if the interface is down, or an invalid IP address is configured that does not reside on the device.

Note that this command only applies to NTP client behavior. The egress interface that the NTP messages use to reach the NTP server is determined by the ntp peer and ntp server commands.

Note that you cannot use this command when using AMF (Allied Telesis Management Framework).

**Examples** To configure the NTP source interface with the IPv4 address 192.0.2.23, enter the commands:

```
awplus# configure terminal
awplus(config)# ntp source 192.0.2.23
```

To configure the NTP source interface with the IPv6 address 2001:0db8:010e::2, enter the commands:

```
awplus# configure terminal
awplus(config)# ntp source 2001:0db8:010e::2
```

To remove a configured address for the NTP source interface, use the following commands:

```
awplus# configure terminal
awplus(config)# no ntp source
```

**Related commands**

ntp peer

ntp server

# show ntp associations

**Overview** Use this command to display the status of NTP associations.

**Syntax** `show ntp associations`

**Mode** User Exec and Privileged Exec

**Example** See the sample output of the **show ntp associations** command displaying the status of NTP associations.

Table 56-1: Example output from **show ntp associations**

```
awplus#show ntp associations
 remote           refid            st t when poll reach    delay   offset  disp
-------------------------------------------------------------------------------
*server1.example.com
                 192.0.2.2        4 u   47   64   377    0.177    0.021   0.001
+192.168.1.10    10.32.16.80      5 u   46   64   377    0.241   -0.045   0.000
* system peer, # backup, + candidate, - outlier, x false ticker
```

Table 56-2: Parameters in the output from **show ntp associations**

| Parameter | Description |
|---|---|
| `* system peer` | The peer that NTP uses to calculate variables like the offset and root dispersion of this AlliedWare Plus device. NTP passes these variables to the clients using this AlliedWare Plus device. |
| `# backup` | Peers that are usable, but are not among the first six peers sorted by synchronization distance. These peers may not be used. |
| `+ candidate` | Peers that the NTP algorithm has determined can be used, along with the system peer, to discipline the clock (i.e. to set the time on the AlliedWare Plus device). |
| `- outlier` | Peers that are not used because their time is significantly different from the other peers. |
| `x false ticker` | Peers that are not used because they are not consider trustworthy. |
| `space` | Peers that are not used because they are, for example, unreachable. |
| `remote` | The peer IP address |
| `refid` | The IP address of the reference clock, or an abbreviation indicating the type of clock (e.g. GPS indicates that the server uses GPS for the reference clock). INIT indicates that the reference clock is initializing, so it is not operational. |

Table 56-2: Parameters in the output from **show ntp associations** (cont.)

| Parameter | Description |
|---|---|
| `st` | The stratum, which is the number of hops between the server and the accurate time source such as an atomic clock. |
| `t` | Type, one of:<br>u: unicast or manycast client<br>b: broadcast or multicast clientl: local reference clock<br>s: symmetric peer<br>A: manycast server<br>B: broadcast server<br>M: multicast server |
| `when` | When last polled (seconds ago, h hours ago, or d days ago). |
| `poll` | Time between NTP requests from the device to the server. |
| `reach` | An indication of whether or not the NTP server is responding to requests. 0 indicates there has never been a successful poll; 1 indicates that the last poll was successful; 3 indicates that the last two polls were successful; 377 indicates that the last 8 polls were successful. |
| `delay` | The round trip communication delay to the remote peer or server, in milliseconds. |
| `offset` | The mean offset (phase) in the times reported between this local host and the remote peer or server (root mean square, milliseconds). |
| `disp` | The amount of clock error (in milliseconds) of the server due to clock resolution, network congestion, etc. |

# show ntp counters

**Overview** This command displays packet counters for NTP.

**Syntax** `show ntp counters`

**Mode** Privileged Exec

**Example** To display counters for NTP use the command:

```
awplus# show ntp counters
```

Figure 56-1: Example output from **show ntp counters**

```
awplus#show ntp counters
Server Received           4
Server Dropped            0
Client Sent               90
Client Received           76
Client Valid Received     76
```

Table 56-3: Parameters in the output from **show ntp counters**

| Parameter | Description |
|---|---|
| `Server Received` | Number of NTP packets received from NTP clients. |
| `Server Dropped` | Number of NTP packets received from NTP clients but dropped. |
| `Client Sent` | Number of NTP packets sent to servers. |
| `Client Received` | Number of NTP packets received from servers |
| `Client Valid Received` | Number of valid NTP packets received from servers. |

# show ntp counters associations

**Overview** Use this command to display NTP packet counters for individual servers and peers.

**Syntax**

```
show ntp counters associations
```

**Mode** Privileged Exec

**Examples** To display packet counters for each NTP server and peer that is associated with a device, use the command:

```
awplus# show ntp counters associations
```

**Output** Figure 56-2: Example output from **show ntp counters associations**

```
awplus#show ntp counters associations
Peer 2001::1
 sent:          -
 received:      -
Peer 10.37.219.100
 sent:          7
 received:      7
```

Table 56-4: Parameters in the output from **show ntp counters associations**

| Parameter | Description |
|---|---|
| Peer | An NTP peer or server that the device is associated with. |
| sent | The number of NTP packets that this device sent to the peer. |
| received | The number of NTP packets that this device received from the peer. |

**Related commands** ntp restrict

# show ntp status

**Overview** Use this command to display the status of the Network Time Protocol (NTP).

**Syntax** `show ntp status`

**Mode** User Exec and Privileged Exec

**Example** To see information about NTP status, use the command:

```
awplus# show ntp status
```

For information about the output displayed by this command, see ntp.org.

Figure 56-3: Example output from **show ntp status**

```
awplus#show ntp status
Reference ID    : C0A8010A (192.168.1.10)
Stratum         : 4
Ref time (UTC)  : Fri Jun 15 05:32:38 2018
System time     : 0.000002004 seconds fast of NTP time
Last offset     : -0.002578615 seconds
RMS offset      : 0.000928071 seconds
Frequency       : 5.099 ppm slow
Residual freq   : -9.120 ppm
Skew            : 17.486 ppm
Precision       : -21 (0.000000477 seconds)
Root delay      : 0.031749818 seconds
Root dispersion : 0.133974627 seconds
Update interval : 65.3 seconds
Leap status     : Normal
```

# 57 SNMP Commands

## Introduction

**Overview**

This chapter provides an alphabetical reference for commands used to configure SNMP. For more information, see:

- the Support for Allied Telesis Enterprise_MIBs in AlliedWare Plus, for information about which MIB objects are supported.
- the SNMP Feature Overview and Configuration_Guide.

For information on filtering and saving command output, see the "Getting Started with AlliedWare Plus" Feature Overview and Configuration Guide.

**Command List**


- "alias (interface)" on page 3015
- "debug snmp" on page 3016
- "show counter snmp-server" on page 3017
- "show debugging snmp" on page 3021
- "show running-config snmp" on page 3022
- "show snmp-server" on page 3023
- "show snmp-server community" on page 3024
- "show snmp-server group" on page 3025
- "show snmp-server user" on page 3026
- "show snmp-server view" on page 3027
- "snmp trap link-status" on page 3028
- "snmp trap link-status suppress" on page 3030
- "snmp-server" on page 3032
- "snmp-server community" on page 3034
- "snmp-server contact" on page 3035
- "snmp-server enable trap" on page 3036

- "snmp-server engineID local" on page 3039
- "snmp-server engineID local reset" on page 3041
- "snmp-server group" on page 3042
- "snmp-server host" on page 3044
- "snmp-server legacy-ifadminstatus" on page 3046
- "snmp-server location" on page 3047
- "snmp-server source-interface" on page 3048
- "snmp-server startup-trap-delay" on page 3049
- "snmp-server user" on page 3050
- "snmp-server view" on page 3053
- "undebug snmp" on page 3054

# alias (interface)

**Overview** Use this command to set an alias name for a port, as returned by the SNMP ifMIB in OID 1.3.6.1.2.1.31.1.1.1.18.

Use the **no** variant of this command to remove an alias name from a port.

**Syntax**

```
alias <ifAlias>
no alias
```

| Parameter | Description |
|---|---|
| *<ifAlias>* | 64 character name for an interface in a network management system. All printable characters are valid. |

**Default** Not set.

**Mode** Interface Configuration

**Usage notes** The interface alias can also be set via SNMP.

Third-party management systems often use standard MIBs to access device information. Network managers can specify an alias interface name to provide a non-volatile way to access the interface.

**Example** To configure the alias interface name 'uplink_a' for port1.0.1, use the following commands:

```
awplus# configure terminal
awplus(config)# interface port1.0.1
awplus(config-if)# alias uplink_a
```

To remove an alias interface name from port1.0.1, use the following commands:

```
awplus# configure terminal
awplus(config)# interface port1.0.1
awplus(config-if)# no alias
```

**Command changes** Version 5.4.8-2.1: command added

# debug snmp

**Overview** This command enables SNMP debugging.

The **no** variant of this command disables SNMP debugging.

**Syntax**

```
debug snmp
[all|detail|error-string|process|receive|send|xdump]
```

```
no debug snmp
[all|detail|error-string|process|receive|send|xdump]
```

| Parameter | Description |
|---|---|
| `all` | Enable or disable the display of all SNMP debugging information. |
| `detail` | Enable or disable the display of detailed SNMP debugging information. |
| `error-string` | Enable or disable the display of debugging information for SNMP error strings. |
| `process` | Enable or disable the display of debugging information for processed SNMP packets. |
| `receive` | Enable or disable the display of debugging information for received SNMP packets. |
| `send` | Enable or disable the display of debugging information for sent SNMP packets. |
| `xdump` | Enable or disable the display of hexadecimal dump debugging information for SNMP packets. |

**Mode** Privileged Exec and Global Configuration

**Example** To start SNMP debugging, use the command:

```
awplus# debug snmp
```

To start SNMP debugging, showing detailed SNMP debugging information, use the command:

```
awplus# debug snmp detail
```

To start SNMP debugging, showing all SNMP debugging information, use the command:

```
awplus# debug snmp all
```

**Related commands**

show debugging snmp

terminal monitor

undebug snmp

# show counter snmp-server

**Overview** This command displays counters for SNMP messages received by the SNMP agent.

**Syntax** `show counter snmp-server`

**Mode** User Exec and Privileged Exec

**Example** To display the counters for the SNMP agent, use the command:

```
awplus# show counter snmp-server
```

**Output** Figure 57-1: Example output from the **show counter snmp-server** command

```
SNMP-SERVER counters
inPkts                 ......... 11
inBadVersions          ......... 0
inBadCommunityNames    ......... 0
inBadCommunityUses     ......... 0
inASNParseErrs         ......... 0
inTooBigs              ......... 0
inNoSuchNames          ......... 0
inBadValues            ......... 0
inReadOnlys            ......... 0
inGenErrs              ......... 0
inTotalReqVars         ......... 9
inTotalSetVars         ......... 0
inGetRequests          ......... 2
inGetNexts             ......... 9
inSetRequests          ......... 0
inGetResponses         ......... 0
inTraps                ......... 0
outPkts                ......... 11
outTooBigs             ......... 0
outNoSuchNames         ......... 2
outBadValues           ......... 0
outGenErrs             ......... 0
outGetRequests         ......... 0
outGetNexts            ......... 0
outSetRequests         ......... 0
outGetResponses        ......... 11
outTraps               ......... 0
UnSupportedSecLevels   ......... 0
NotInTimeWindows       ......... 0
UnknownUserNames       ......... 0
UnknownEngineIDs       ......... 0
WrongDigest            ......... 0
DecryptionErrors       ......... 0
UnknownSecModels       ......... 0
InvalidMsgs            ......... 0
UnknownPDUHandlers     ......... 0
```

**Table 1:** Parameters in the output of the **show counter snmp-server** command

| Parameter | Meaning |
|---|---|
| `inPkts` | The total number of SNMP messages received by the SNMP agent. |
| `inBadVersions` | The number of messages received by the SNMP agent for an unsupported SNMP version. It drops these messages.The SNMP agent on your device supports versions 1, 2C, and 3. |
| `inBadCommunityNames` | The number of messages received by the SNMP agent with an unrecognized SNMP community name. It drops these messages. |
| `inBadCommunityUses` | The number of messages received by the SNMP agent where the requested SNMP operation is not permitted from SNMP managers using the SNMP community named in the message. |
| `inASNParseErrs` | The number of ASN.1 or BER errors that the SNMP agent has encountered when decoding received SNMP Messages. |
| `inTooBigs` | The number of SNMP PDUs received by the SNMP agent where the value of the error-status field is 'tooBig'. This is sent by an SNMP manager to indicate that an exception occurred when processing a request from the agent. |
| `inNoSuchNames` | The number of SNMP PDUs received by the SNMP agent where the value of the error-status field is 'noSuchName'. This is sent by an SNMP manager to indicate that an exception occurred when processing a request from the agent. |
| `inBadValues` | The number of SNMP PDUs received by the SNMP agent where the value of the error-status field is 'badValue'. This is sent by an SNMP manager to indicate that an exception occurred when processing a request from the agent. |
| `inReadOnlys` | The number of valid SNMP PDUs received by the SNMP agent where the value of the error-status field is 'readOnly'. The SNMP manager should not generate a PDU which contains the value 'readOnly' in the error-status field. This indicates that there is an incorrect implementations of the SNMP. |
| `inGenErrs` | The number of SNMP PDUs received by the SNMP agent where the value of the error-status field is 'genErr'. |

**Table 1:** Parameters in the output of the **show counter snmp-server** command

| Parameter | Meaning |
|---|---|
| `inTotalReqVars` | The number of MIB objects that the SNMP agent has successfully retrieved after receiving valid SNMP Get-Request and Get-Next PDUs. |
| `inTotalSetVars` | The number of MIB objects that the SNMP agent has successfully altered after receiving valid SNMP Set-Request PDUs. |
| `inGetRequests` | The number of SNMP Get-Request PDUs that the SNMP agent has accepted and processed. |
| `inGetNexts` | The number of SNMP Get-Next PDUs that the SNMP agent has accepted and processed. |
| `inSetRequests` | The number of SNMP Set-Request PDUs that the SNMP agent has accepted and processed. |
| `inGetResponses` | The number of SNMP Get-Response PDUs that the SNMP agent has accepted and processed. |
| `inTraps` | The number of SNMP Trap PDUs that the SNMP agent has accepted and processed. |
| `outPkts` | The number of SNMP Messages that the SNMP agent has sent. |
| `outTooBigs` | The number of SNMP PDUs that the SNMP agent has generated with the value 'tooBig' in the error-status field. This is sent to the SNMP manager to indicate that an exception occurred when processing a request from the manager. |
| `outNoSuchNames` | The number of SNMP PDUs that the SNMP agent has generated with the value `noSuchName' in the error-status field. This is sent to the SNMP manager to indicate that an exception occurred when processing a request from the manager. |
| `outBadValues` | The number of SNMP PDUs that the SNMP agent has generated with the value 'badValue' in the error-status field. This is sent to the SNMP manager to indicate that an exception occurred when processing a request from the manager. |
| `outGenErrs` | The number of SNMP PDUs that the SNMP agent has generated with the value 'genErr' in the error-status field. This is sent to the SNMP manager to indicate that an exception occurred when processing a request from the manager. |
| `outGetRequests` | The number of SNMP Get-Request PDUs that the SNMP agent has generated. |

**Table 1:** Parameters in the output of the **show counter snmp-server** command

| Parameter | Meaning |
|---|---|
| `outGetNexts` | The number of SNMP Get-Next PDUs that the SNMP agent has generated. |
| `outSetRequests` | The number of SNMP Set-Request PDUs that the SNMP agent has generated. |
| `outGetResponses` | The number of SNMP Get-Response PDUs that the SNMP agent has generated. |
| `outTraps` | The number of SNMP Trap PDUs that the SNMP agent has generated. |
| `UnSupportedSecLevels` | The number of received packets that the SNMP agent has dropped because they requested a securityLevel unknown or not available to the SNMP agent. |
| `NotInTimeWindows` | The number of received packets that the SNMP agent has dropped because they appeared outside of the authoritative SNMP agent's window. |
| `UnknownUserNames` | The number of received packets that the SNMP agent has dropped because they referenced an unknown user. |
| `UnknownEngineIDs` | The number of received packets that the SNMP agent has dropped because they referenced an unknown snmpEngineID. |
| `WrongDigest` | The number of received packets that the SNMP agent has dropped because they didn't contain the expected digest value. |
| `DecryptionErrors` | The number of received packets that the SNMP agent has dropped because they could not be decrypted. |
| `UnknownSecModels` | The number of messages received that contain a security model that is not supported by the server. Valid for SNMPv3 messages only. |
| `InvalidMsgs` | The number of messages received where the security model is supported but the authentication fails. Valid for SNMPv3 messages only. |
| `UnknownPDUHandlers` | The number of times the SNMP handler has failed to process a PDU. This is a system debugging counter. |

**Related commands** show snmp-server

# show debugging snmp

**Overview** This command displays whether SNMP debugging is enabled or disabled.

**Syntax**

```
show debugging snmp
```

**Mode** User Exec and Privileged Exec

**Example** To display the status of SNMP debugging, use the command:

```
awplus# show debugging snmp
```

**Output** Figure 57-2: Example output from the **show debugging snmp** command

```
Snmp (SMUX) debugging status:
  Snmp debugging is on
```

**Related commands** debug snmp

# show running-config snmp

**Overview** This command displays the current configuration of SNMP on your device.

**Syntax**

```
show running-config snmp
```

**Mode** Privileged Exec

**Example** To display the current configuration of SNMP on your device, use the command:

```
awplus# show running-config snmp
```

**Output** Figure 57-3: Example output from the **show running-config snmp** command

```
snmp-server contact AlliedTelesis
snmp-server location Philippines
snmp-server group grou1 auth read view1 write view1 notify view1
snmp-server view view1 1 included
snmp-server community public
snmp-server user user1 group1 auth md5 password priv des
password
```

**Related commands** show snmp-server

# show snmp-server

**Overview** This command displays the status and current configuration of the SNMP server.

**Syntax**

```
show snmp-server
```

**Mode** Privileged Exec

**Example** To display the status of the SNMP server, use the command:

```
awplus# show snmp-server
```

**Output** Figure 57-4: Example output from the **show snmp-server** command

```
SNMP Server ........................... Enabled
IP Protocol ........................... IPv4
SNMPv3 Engine ID (configured name) ... Not set
SNMPv3 Engine ID (actual) ............ 0x80001f888021338e4747b8e607
```

**Related commands**

debug snmp

show counter snmp-server

snmp-server

snmp-server engineID local

snmp-server engineID local reset

# show snmp-server community

**Overview** This command displays the SNMP server communities configured on the device. SNMP communities are specific to v1 and v2c.

**Syntax**

```
show snmp-server community
```

**Mode** Privileged Exec

**Example** To display the SNMP server communities, use the command:

```
awplus# show snmp-server community
```

**Output** Figure 57-5: Example output from the **show snmp-server community** command

```
SNMP community information:
  Community Name ........... public
    Access ................ Read-only
    View .................. none
```

**Related commands**

show snmp-server

snmp-server community

# show snmp-server group

**Overview** This command displays information about SNMP server groups. This command is used with SNMP version 3 only.

**Syntax**

```
show snmp-server group
```

**Mode** Privileged Exec

**Example** To display the SNMP groups configured on the device, use the command:

```
awplus# show snmp-server group
```

**Output** Figure 57-6: Example output from the **show snmp-server group** command

```
SNMP group information:
  Group name ............. guireadgroup
    Security Level ........ priv
    Read View ............ guiview
    Write View ........... none
    Notify View .......... none

  Group name ............. guiwritegroup
    Security Level ........ priv
    Read View ............ none
    Write View ........... guiview
    Notify View .......... none
```

**Related commands**

show snmp-server

snmp-server group

# show snmp-server user

**Overview** This command displays the SNMP server users and is used with SNMP version 3 only.

**Syntax**

```
show snmp-server user
```

**Mode** Privileged Exec

**Example** To display the SNMP server users configured on the device, use the command:

```
awplus# show snmp-server user
```

**Output** Figure 57-7: Example output from the **show snmp-server user** command

```
Name                Group name          Auth        Privacy
-------             -------------       -------     ----------
freddy              guireadgroup        none        none
```

**Related commands**

show snmp-server

snmp-server user

# show snmp-server view

**Overview** This command displays the SNMP server views and is used with SNMP version 3 only.

**Syntax**

```
show snmp-server view
```

**Mode** Privileged Exec

**Example** To display the SNMP server views configured on the device, use the command:

```
awplus# show snmp-server view
```

**Output** Figure 57-8: Example output from the **show snmp-server view** command

```
SNMP view information:
  View Name ............... view1
    OID .................... 1
    Type ................... included
```

**Related commands** show snmp-server

snmp-server view

# snmp trap link-status

**Overview** Use this command to enable SNMP to send link status notifications (traps) for the interfaces when an interface goes up (linkUp) or down (linkDown).

Use the **no** variant of this command to disable the sending of link status notifications.

**Syntax**

```
snmp trap link-status [enterprise]
no snmp trap link-status
```

| Parameter | Description |
|---|---|
| `enterprise` | Send an Allied Telesis enterprise type of link trap. |

**Default** Disabled

**Mode** Interface Configuration

**Usage notes** The link status notifications can be enabled for the following interface types:

- switch port (e.g. port1.0.1)
- VLAN (e.g. vlan2)
- Ethernet (e.g. eth1)
- static and dynamic link aggregation (e.g. sa2, po2)

To specify where notifications are sent, use the snmp-server host command. To configure the device globally to send other notifications, use the snmp-server enable trap command.

**Examples** To enable SNMP to send link status notifications for port1.0.1 to port1.0.3 use the following commands:

```
awplus# configure terminal
awplus(config)# interface port1.0.1-port1.0.3
awplus(config-if)# snmp trap link-status
```

To disable the sending of link status notifications for port1.0.1, use the following commands:

```
awplus# configure terminal
awplus(config)# interface port1.0.1
awplus(config-if)# no snmp trap link-status
```

**Related commands**

show interface

snmp trap link-status suppress

snmp-server enable trap

snmp-server host

# snmp trap link-status suppress

**Overview** Use this command to enable the suppression of link status notifications (traps) for the interfaces beyond the specified threshold, in the specified interval.

Use the **no** variant of this command to disable the suppression of link status notifications for the ports.

**Syntax**

```
snmp trap link-status suppress {time {<1-60>|default}|threshold
{<1-20>|default}}
```

```
no snmp trap link-status suppress
```

| Parameter | Description |
|---|---|
| `time` | Set the suppression timer for link status notifications. |
| *<1-60>* | The suppress time in seconds. |
| `default` | The default suppress time in seconds (60). |
| `threshold` | Set the suppression threshold for link status notifications. This is the number of link status notifications after which to suppress further notifications within the suppression timer interval. |
| *<1-20>* | The number of link status notifications. |
| `default` | The default number of link status notifications (20). |

**Default** By default, if link status notifications are enabled (they are enabled by default), the suppression of link status notifications is enabled: notifications that exceed the notification threshold (default 20) within the notification timer interval (default 60 seconds) are not sent.

**Mode** Interface Configuration

**Usage notes** An unstable network can generate many link status notifications. When notification suppression is enabled, a suppression timer is started when the first link status notification of a particular type (linkUp or linkDown) is sent for an interface.

If the threshold number of notifications of this type is sent before the timer reaches the suppress time, any further notifications of this type generated for the interface during the interval are not sent. At the end of the interval, the sending of link status notifications resumes, until the threshold is reached in the next interval.

**Examples** To suppress link status notifications for port1.0.1 to port1.0.3 after 10 notifications in 40 seconds, use the following commands:

```
awplus# configure terminal
awplus(config)# interface port1.0.1-port1.0.3
awplus(config-if)# snmp trap link-status suppress time 40
threshold 10
```

To stop suppressing link status notifications for port1.0.1, use the following commands:

```
awplus# configure terminal
awplus(config)# interface port1.0.1
awplus(config-if)# no snmp trap link-status suppress
```

**Related commands**

show interface

snmp trap link-status

# snmp-server

**Overview** Use this command to enable the SNMP agent (server) on the device. The SNMP agent receives and processes SNMP packets sent to the device, and generates notifications (traps) that have been enabled by the snmp-server enable trap command.

Use the **no** variant of this command to disable the SNMP agent on the device. When SNMP is disabled, SNMP packets received by the device are discarded, and no notifications are generated. This does not remove any existing SNMP configuration.

**Syntax**

```
snmp-server [ip|ipv6]
no snmp-server [ip|ipv6]
```

| Parameter | Description |
|---|---|
| ip | Enable or disable the SNMP agent for IPv4. |
| ipv6 | Enable or disable the SNMP agent for IPv6. |

**Default** By default, the SNMP agent is enabled for both IPv4 and IPv6. If neither the **ip** parameter nor the **ipv6** parameter is specified for this command, then SNMP is enabled or disabled for both IPv4 and IPv6.

**Mode** Global Configuration

**Examples** To enable SNMP on the device for both IPv4 and IPv6, use the commands:

```
awplus# configure terminal
awplus(config)# snmp-server
```

To enable the SNMP agent for IPv4 on the device, use the commands:

```
awplus# configure terminal
awplus(config)# snmp-server ip
```

To disable the SNMP agent for both IPv4 and IPv6 on the device, use the commands:

```
awplus# configure terminal
awplus(config)# no snmp-server
```

To disable the SNMP agent for IPv4, use the commands:

```
awplus(config)# no snmp-server ipv4
```

**Related commands**

show snmp-server

show snmp-server community

show snmp-server user

snmp-server community

snmp-server contact

snmp-server enable trap

snmp-server engineID local

snmp-server group

snmp-server host

snmp-server location

snmp-server view

# snmp-server community

**Overview**

This command creates an SNMP community, optionally setting the access mode for the community. The default access mode is read only. If view is not specified, the community allows access to all the MIB objects. The SNMP communities are only valid for SNMPv1 and v2c and provide very limited security. Communities should not be used when operating SNMPv3.

The **no** variant of this command removes an SNMP community. The specified community must already exist on the device.

**Syntax**

```
snmp-server community <community-name> {view <view-name>|ro|rw}
no snmp-server community <community-name> [{view <view-name>}]
```

| Parameter | Description |
|---|---|
| *<community-name>* | Community name. The community name is a case sensitive string of up to 20 characters. |
| `view` | Configure SNMP view. If view is not specified, the community allows access to all the MIB objects. |
| *<view-name>* | View name. The view name is a string up to 20 characters long and is case sensitive. |
| `ro` | Read-only community. |
| `rw` | Read-write community. |

**Mode**

Global Configuration

**Example**

The following command creates an SNMP community called “public” with read only access to all MIB variables from any management station.

```
awplus# configure terminal
awplus(config)# snmp-server community public ro
```

The following command removes an SNMP community called “public”

```
awplus# configure terminal
awplus(config)# no snmp-server community public
```

**Related commands**

show snmp-server

show snmp-server community

snmp-server view

# snmp-server contact

**Overview** This command sets the contact information for the system. The contact name is:

- displayed in the output of the show system command
- stored in the MIB object sysContact

The **no** variant of this command removes the contact information from the system.

**Syntax**

```
snmp-server contact <contact-info>
no snmp-server contact
```

| Parameter | Description |
|---|---|
| *<contact-info>* | The contact information for the system, from 0 to 255 characters long. Valid characters are any printable character and spaces. |

**Mode** Global Configuration

**Example** To set the system contact information to "support@alliedtelesis.co.nz", use the command:

```
awplus# configure terminal
awplus(config)# snmp-server contact
support@alliedtelesis.co.nz
```

**Related commands**

show system

snmp-server location

snmp-server group

# snmp-server enable trap

**Overview** Use this command to enable the switch to transmit the specified notifications (traps).

Note that the Environmental Monitoring traps defined in the AT-ENVMONv2-MIB are enabled by default.

Use the **no** variant of this command to disable the transmission of the specified notifications.

**Syntax**

```
snmp-server enable trap <trap-list>
no snmp-server enable trap <trap-list>
```

Depending on your device model, you can enable some or all of the traps in the following table:

| Parameter | Description |
|---|---|
| `atmf` | AMF traps. |
| `atmflink` | AMF link traps. |
| `atmfnode` | AMF node traps. |
| `atmfrr` | AMF reboot-rolling traps. |
| `auth` | Authentication failure. |
| `bgp` | BGP traps. |
| `chassis` | Chassis traps. |
| `dhcpsnooping` | DHCP snooping and ARP security traps. These notifications must also be set using the **ip dhcp snooping violation** command, and/or the arp security violation **arp security violation** command. |
| `epsr` | EPSR traps. |
| `g8032` | G.8032 ERP traps. |
| `lldp` | Link Layer Discovery Protocol (LLDP) traps. These notifications must also be enabled using the **lldp notifications** command, and/or the **lldp med-notifications** command. |
| `loopprot` | Loop Protection traps. |
| `mstp` | MSTP traps. |
| `nsm` | NSM traps. |
| `ospf` | OSPF traps. |
| `pim` | PIM traps. |
| `power-inline` | Power-inline traps (Power Ethernet MIB RFC 3621). |
| `qsp` | QoS Storm Protection |

| Parameter | Description |
|---|---|
| `rmon` | RMON traps. |
| `thrash-limit` | MAC address Thrash Limiting traps. |
| `vcs` | VCS traps. |
| `vrrp` | Virtual Router Redundancy (VRRP) traps. |
| `ufo` | Upstream Forwarding Only (UFO) traps. |

**Default** Disabled

**Mode** Global Configuration

**Usage notes** This command cannot be used to enable link status notifications globally. To enable link status notifications for particular interfaces, use the snmp trap link-status command.

To specify where notifications are sent, use the snmp-server host command.

Note that you can enable (or disable) multiple traps with a single command, by specifying a space-separated list of traps.

**Examples** To enable the device to send a notification if an AMF node changes its status, use the following commands:

```
awplus# configure terminal
awplus(config)# snmp-server enable trap atmfnode
```

To enable the device to send MAC address Thrash Limiting traps, use the following commands:

```
awplus# configure terminal
awplus(config)# snmp-server enable trap thrash-limit
```

To disable the device from sending MAC address Thrash Limiting traps, use the following commands:

```
awplus# configure terminal
awplus(config)# no snmp-server enable trap thrash-limit
```

To enable the device to send OSPF and VRRP-related traps, use the following commands:

```
awplus# configure terminal
awplus(config)# snmp-server enable trap ospf vrrp
```

To disable OSPF traps being sent out by the device, use the following commands:

```
awplus# configure terminal
awplus(config)# no snmp-server enable trap ospf
```

**Related commands**

show snmp-server

snmp trap link-status

snmp-server host

**Command changes**

Version 5.4.7-2.1: **ufo** parameter added

# snmp-server engineID local

**Overview** Use this command to configure the SNMPv3 engine ID. The SNMPv3 engine ID is used to uniquely identify the SNMPv3 agent on a device when communicating with SNMP management clients. Once an SNMPv3 engine ID is assigned, this engine ID is permanently associated with the device until you change it.

Use the **no** variant of this command to set the user defined SNMPv3 engine ID to a system generated pseudo-random value by resetting the SNMPv3 engine. The **no snmp-server engineID local** command has the same effect as the **snmp-server engineID local default** command.

Note that the snmp-server engineID local reset command is used to force the system to generate a new engine ID when the current engine ID is also system generated.

**Syntax**

```
snmp-server engineID local {<engine-id>|default}
no snmp-server engineID local
```

| Parameter | Description |
|---|---|
| *<engine-id>* | Specify SNMPv3 Engine ID value, a string of up to 27 characters. |
| `default` | Set SNMPv3 engine ID to a system generated value by resetting the SNMPv3 engine, provided the current engine ID is user defined. If the current engine ID is system generated, use the snmp-server engineID local reset command to force the system to generate a new engine ID. |

**Mode** Global Configuration

**Usage notes** All devices must have a unique engine ID which is permanently set unless it is configured by the user.

**Example** To set the SNMPv3 engine ID to 800000cf030000cd123456, use the following commands:

```
awplus# configure terminal
awplus(config)# snmp-server engineID local
800000cf030000cd123456
```

To set a user defined SNMPv3 engine ID back to a system generated value, use the following commands:

```
awplus# configure terminal
awplus(config)# no snmp-server engineID local
```

**Output** The following example shows the engine ID values after configuration:

```
awplus(config)#snmp-server engineid local asdgdfh231234d
awplus(config)#exit
awplus#show snmp-server

SNMP Server ........................... Enabled
IP Protocol ........................... IPv4
SNMPv3 Engine ID (configured name) ... asdgdfh231234d
SNMPv3 Engine ID (actual) ............ 0x80001f888029af52e149198483

awplus(config)#no snmp-server engineid local
awplus(config)#exit
awplus#show snmp-server

SNMP Server ........................... Enabled
IP Protocol ........................... IPv4
SNMPv3 Engine ID (configured name) ... Not set
SNMPv3 Engine ID (actual) ............ 0x80001f888029af52e149198483
```

**Related commands**

show snmp-server

snmp-server engineID local reset

snmp-server group

# snmp-server engineID local reset

**Overview** Use this command to force the device to generate a new pseudo-random SNMPv3 engine ID by resetting the SNMPv3 engine. If the current engine ID is user defined, use the snmp-server engineID local command to set SNMPv3 engine ID to a system generated value.

**Syntax**

```
snmp-server engineID local reset
```

**Mode** Global Configuration

**Example** To force the SNMPv3 engine ID to be reset to a system generated value, use the commands:

```
awplus# configure terminal
awplus(config)# snmp-server engineID local reset
```

**Related commands** snmp-server engineID local

show snmp-server

# snmp-server group

**Overview** This command is used with SNMP version 3 only, and adds an SNMP group, optionally setting the security level and view access modes for the group. The security and access views defined for the group represent the minimum required of its users in order to gain access.

The **no** variant of this command deletes an SNMP group, and is used with SNMPv3 only. The group with the specified authentication/encryption parameters must already exist.

**Syntax**

```
snmp-server group <groupname> {auth|noauth|priv} [read
<readname>|write <writename>|notify <notifyname>]
```

```
no snmp-server group <groupname> {auth|noauth|priv}
```

| Parameter | Description |
|---|---|
| *<groupname>* | Group name. The group name is a string up to 20 characters long and is case sensitive. |
| auth | Authentication. |
| noauth | No authentication and no encryption. |
| priv | Authentication and encryption. |
| read | Configure read view. |
| *<readname>* | Read view name. |
| write | Configure write view. |
| *<writename>* | Write view name. The view name is a string up to 20 characters long and is case sensitive. |
| notify | Configure notify view. |
| *<notifyname>* | Notify view name. The view name is a string up to 20 characters long and is case sensitive. |

**Mode** Global Configuration

**Examples** To add SNMP group, for ordinary users, user the following commands:

```
awplus# configure terminal
```

```
awplus(config)# snmp-server group usergroup noauth read
useraccess write useraccess
```

To delete SNMP group `usergroup`, use the following commands

```
awplus# configure terminal
```

```
awplus(config)# no snmp-server group usergroup noauth
```

**Related commands**

snmp-server

show snmp-server

show snmp-server group

show snmp-server user

# snmp-server host

**Overview**

This command specifies an SNMP trap host destination to which Trap or Inform messages generated by the device are sent.

For SNMP version 1 and 2c you must specify the community name parameter. For SNMP version 3, specify the authentication/encryption parameters and the user name. If the version is not specified, the default is SNMP version 1. Inform messages can be sent instead of traps for SNMP version 2c and 3.

Use the **no** variant of this command to remove an SNMP trap host. The trap host must already exist.

The trap host is uniquely identified by:

- host IP address (IPv4 or IPv6),
- inform or trap messages,
- community name (SNMPv1 or SNMP v2c) or the authentication/encryption parameters and user name (SNMP v3).

**Syntax**

```
snmp-server host {<ipv4-address>|<ipv6-address>} [traps]
[version 1] <community-name>]
```

```
snmp-server host {<ipv4-address>|<ipv6-address>}
[informs|traps] version 2c <community-name>
```

```
snmp-server host {<ipv4-address>|<ipv6-address>}
[informs|traps] version 3 {auth|noauth|priv} <user-name>
```

```
no snmp-server host {<ipv4-address>|<ipv6-address>} [traps]
[version 1] <community-name>
```

```
no snmp-server host {<ipv4-address>|<ipv6-address>}
[informs|traps] version 2c <community-name>
```

```
no snmp-server host {<ipv4-address>|<ipv6-address>}
[informs|traps] version 3 {auth|noauth|priv} <user-name>
```

| Parameter | Description |
|---|---|
| *<ipv4-address>* | IPv4 trap host address in the format `A.B.C.D`, for example, `192.0.2.2`. |
| *<ipv6-address>* | IPv6 trap host address in the format `x:x::x:x` for example, `2001:db8::8a2e:7334`. |
| `informs` | Send Inform messages to this host. |
| `traps` | Send Trap messages to this host (default). |
| `version` | SNMP version to use for notification messages. Default: version 1. |
| `1` | Use SNMPv1(default). |
| `2c` | Use SNMPv2c. |
| `3` | Use SNMPv3. |

| Parameter | Description |
|---|---|
| `auth` | Authentication. |
| `noauth` | No authentication. |
| `priv` | Encryption. |
| *<community-name>* | The SNMPv1 or SNMPv2c community name. |
| *<user-name>* | SNMPv3 user name. |

**Mode** Global Configuration

**Examples** To configure the device to send generated traps to the IPv4 host destination `192.0.2.5` with the SNMPv2c community name public, use the following command:

```
awplus# configure terminal
awplus(config)# snmp-server host  version 2c public192.0.2.5
```

To configure the device to send generated traps to the IPv6 host destination `2001:db8::8a2e:7334` with the SNMPv2c community name private, use the following command:

```
awplus# configure terminal
awplus(config)# snmp-server host  version 2c
private2001:db8::8a2e:7334
```

To remove a configured trap host of 192.0.2.5 with the SNMPv2c community name public, use the following command:

```
awplus# configure terminal
awplus(config)# no snmp-server host  version 2c public192.0.2.5
```

**Related commands**

snmp trap link-status

snmp-server enable trap

snmp-server view

# snmp-server legacy-ifadminstatus

**Overview**

Use this command to set the ifAdminStatus to reflect the operational state of the interface, rather than the administrative state.

The **no** variant of this command sets the ifAdminStatus to reflect the administrative state of the interface.

**Syntax**

```
snmp-server legacy-ifadminstatus
no snmp-server legacy-ifadminstatus
```

**Default**

Legacy ifAdminStatus is turned off by default, so by default the SNMP ifAdminStatus reflects the administrative state of the interface.

**Mode**

Global Configuration

**Usage notes**

Note that if you enable Legacy ifAdminStatus, the ifAdminStatus will report a link's status as Down when the link has been blocked by a process such as loop protection.

**Example**

To turn on Legacy ifAdminStatus, use the commands:

```
awplus# configure terminal
awplus(config)# snmp-server legacy-ifadminstatus
```

**Related commands**

show interface

# snmp-server location

**Overview** This command sets the location of the system. The location is:

- displayed in the output of the show system command
- stored in the MIB object sysLocation

The **no** variant of this command removes the configured location from the system.

**Syntax**

```
snmp-server location <location-name>
no snmp-server location
```

| Parameter | Description |
|---|---|
| *<location-name>* | The location of the system, from 0 to 255 characters long. Valid characters are any printable character and spaces. |

**Mode** Global Configuration

**Example** To set the location to "server room 523", use the following commands:

```
awplus# configure terminal
awplus(config)# snmp-server location server room 523
```

**Related commands**

show snmp-server

show system

snmp-server contact

# snmp-server source-interface

**Overview**

Use this command to specify the originating interface for SNMP traps or informs. An interface specified by this command must already have an IP address assigned to it.

Use the **no** variant of this command to reset the interface to its default value (the originating egress interface).

**Syntax**

```
snmp-server source-interface {traps|informs} <interface-name>
no snmp-server source-interface {traps|informs}
```

| Parameter | Description |
|---|---|
| `traps` | SNMP traps. |
| `informs` | SNMP informs. |
| `<interface-name>` | Interface name (must already have an IP address assigned). |

**Default**

The originating egress interface of the traps and informs messages

**Mode**

Global Configuration

**Usage notes**

When an SNMP server sends an SNMP trap or inform message, the message carries the notification IP address of its originating interface. Use this command to assign this interface.

**Example**

The following commands set vlan2 to be the interface whose IP address is used as the originating address in SNMP informs packets.

```
awplus# configure terminal
awplus(config)# snmp-server source-interface informs vlan2
```

The following commands reset the originating source interface for SNMP trap messages to be the default interface (the originating egress interface):

```
awplus# configure terminal
awplus(config)# no snmp-server source-interface traps
```

**Validation Commands**

show running-config

# snmp-server startup-trap-delay

**Overview**

Use this command to set the time in seconds after following completion of the device startup sequence before the device sends any SNMP traps (or SNMP notifications).

Use the no variant of this command to restore the default startup delay of 30 seconds.

**Syntax**

```
snmp-server startup-trap-delay <delay-time>
no snmp-server startup-trap-delay
```

| Parameter | Description |
|---|---|
| *<delay-time>* | Specify an SNMP trap delay time in seconds in the range of 30 to 600 seconds. |

**Default**

The SNMP server trap delay time is 30 seconds. The no variant restores the default.

**Mode**

Global Configuration

**Example**

To delay the device sending SNMP traps until 60 seconds after device startup, use the following commands:

```
awplus# configure terminal
awplus(config)# snmp-server startup-trap-delay 60
```

To restore the sending of SNMP traps to the default of 30 seconds after device startup, use the following commands:

```
awplus# configure terminal
awplus(config)# no snmp-server startup-trap-delay
```

**Validation Commands**

show snmp-server

# snmp-server user

**Overview** Use this command to create or move users as members of specified groups. This command is used with SNMPv3 only.

The **no** variant of this command removes an SNMPv3 user. The specified user must already exist.

**Syntax**

```
snmp-server user <username> <groupname> [encrypted] [auth
{md5|sha} <auth-password>] [priv {des|aes} <privacy-password>]
```

```
no snmp-server user <username>
```

| Parameter | Description |
|---|---|
| *<username>* | User name. The user name is a string up to 20 characters long and is case sensitive. |
| *<groupname>* | Group name. The group name is a string up to 20 characters long and is case sensitive. |
| `encrypted` | Use the encrypted parameter when you want to enter encrypted passwords. |
| `auth` | Authentication protocol. |
| `md5` | MD5 Message Digest Algorithms. |
| `sha` | SHA Secure Hash Algorithm. |
| *<auth-password>* | Authentication password. The password is a string of 8 to 20 characters long and is case sensitive. |
| `priv` | Privacy protocol. |
| `des` | DES: Data Encryption Standard. |
| `aes` | AES: Advanced Encryption Standards. |
| *<privacy-password>* | Privacy password. The password is a string of 8 to 20 characters long and is case sensitive. |

**Mode** Global Configuration

**Usage notes** Additionally this command provides the option of selecting an authentication protocol and (where appropriate) an associated password. Similarly, options are offered for selecting a privacy protocol and password.

- Note that each SNMP user must be configured on both the manager and agent entities. Where passwords are used, these passwords must be the same for both entities.
- Use the **encrypted** parameter when you want to enter already encrypted passwords in encrypted form as displayed in the running and startup configs stored on the device. For example, you may need to move a user from one group to another group and keep the same passwords for the user instead of removing the user to apply new passwords.

- User passwords are entered using plaintext without the **encrypted** parameter and are encrypted according to the authentication and privacy protocols selected.
- User passwords are viewed as encrypted passwords in running and startup configs shown from **show running-config** and **show startup-config** commands respectively. Copy and paste encrypted passwords from running-configs or startup-configs to avoid entry errors.

**Examples** To add SNMP user authuser as a member of group 'usergroup', with authentication protocol MD5, authentication password 'Authpass', privacy protocol AES and privacy password 'Privpass' use the following commands:

```
awplus# configure terminal
```

```
awplus(config)# snmp-server user authuser usergroup auth md5
Authpass priv aes Privpass
```

Validate the user is assigned to the group using the **show snmp-server user** command:

```
awplus#show snmp-server user
Name                Group name          Auth        Privacy
-------             -------------       -------     ----------
authuser            usergroup           md5         aes
```

To enter existing SNMP user 'authuser' with existing passwords as a member of group 'newusergroup' with authentication protocol MD5 with the encrypted authentication password 0x1c74b9c22118291b0ce0cd883f8dab6b74, and privacy protocol AES with the encrypted privacy password 0x0e0133db5453ebd03822b004eeacb6608f, use the following commands:

```
awplus# configure terminal
```

```
awplus(config)# snmp-server user authuser newusergroup
encrypted auth md5 0x1c74b9c22118291b0ce0cd883f8dab6b74 priv
aes 0x0e0133db5453ebd03822b004eeacb6608f
```

***NOTE:*** *Copy and paste the encrypted passwords from the **running-config** or the **startup-config** displayed, using the **show running-config** and **show startup- config** commands respectively, into the command line to avoid key stroke errors issuing this command.*

Validate the user has been moved from the first group using the **show snmp-server user** command:

```
awplus#show snmp-server user
Name                Group name          Auth        Privacy
-------             -------------       -------     ----------
authuser            newusergroup        md5         aes
```

To delete SNMP user 'authuser', use the following commands:

```
awplus# configure terminal
```

```
awplus(config)# no snmp-server user authuser
```

**Related commands**

show snmp-server user

snmp-server view

# snmp-server view

**Overview** Use this command to create an SNMP view that specifies a sub-tree of the MIB. Further sub-trees can then be added by specifying a new OID to an existing view. Views can be used in SNMP communities or groups to control the remote manager's access.

***NOTE:*** *The object identifier must be specified in a sequence of integers separated by decimal points.*

The **no** variant of this command removes the specified view on the device. The view must already exist.

**Syntax**

```
snmp-server view <view-name> <mib-name> {included|excluded}
no snmp-server view <view-name>
```

| Parameter | Description |
|---|---|
| `<view-name>` | SNMP server view name.<br>The view name is a string up to 20 characters long and is case sensitive. |
| `<mib-name>` | Object identifier of the MIB. |
| `included` | Include this OID in the view. |
| `excluded` | Exclude this OID in the view. |

**Mode** Global Configuration

**Examples** The following command creates a view called "loc" that includes the system location MIB sub-tree.

```
awplus(config)# snmp-server view loc 1.3.6.1.2.1.1.6.0 included
```

To remove the view "loc" use the following command

```
awplus(config)# no snmp-server view loc
```

**Related commands**

show snmp-server view

snmp-server community

# undebug snmp

**Overview** This command applies the functionality of the no debug snmp command.

# 58 LLDP Commands

## Introduction

**Overview**

LLDP and LLDP-MED can be configured using the commands in this chapter, or by using SNMP with the LLDP-MIB and LLDP-EXT-DOT1-MIB (see the Support for Allied Telesis Enterprise MIBs in AlliedWare Plus).

The Voice VLAN feature can be configured using commands in VLAN Commands chapter.

For more information about LLDP, see the LLDP Feature Overview and Configuration Guide.

LLDP can transmit a lot of data about the network. Typically, the network information gathered using LLDP is transferred to a Network Management System by SNMP. For security reasons, we recommend using SNMPv3 for this purpose (see the SNMP Feature Overview and Configuration Guide).

LLDP operates over physical ports only. For example, it can be configured on switch ports that belong to static or dynamic channel groups, but not on the channel groups themselves.

**Command List**


- "clear lldp statistics" on page 3057
- "clear lldp table" on page 3058
- "debug lldp" on page 3059
- "lldp faststart-count" on page 3060
- "lldp holdtime-multiplier" on page 3061
- "lldp management-address" on page 3062
- "lldp med-notifications" on page 3063
- "lldp med-tlv-select" on page 3064
- "lldp non-strict-med-tlv-order-check" on page 3067
- "lldp notification-interval" on page 3068
- "lldp notifications" on page 3069

- "lldp port-number-type" on page 3070
- "lldp reinit" on page 3071
- "lldp run" on page 3072
- "lldp timer" on page 3073
- "lldp tlv-select" on page 3074
- "lldp transmit receive" on page 3076
- "lldp tx-delay" on page 3077
- "location civic-location configuration" on page 3078
- "location civic-location identifier" on page 3082
- "location civic-location-id" on page 3083
- "location coord-location configuration" on page 3084
- "location coord-location identifier" on page 3086
- "location coord-location-id" on page 3087
- "location elin-location" on page 3089
- "location elin-location-id" on page 3090
- "show debugging lldp" on page 3091
- "show lldp" on page 3092
- "show lldp interface" on page 3094
- "show lldp local-info" on page 3096
- "show lldp neighbors" on page 3101
- "show lldp neighbors detail" on page 3102
- "show lldp statistics" on page 3106
- "show lldp statistics interface" on page 3108
- "show location" on page 3110

# clear lldp statistics

**Overview** This command clears all LLDP statistics (packet and event counters) associated with specified ports. If no port list is supplied, LLDP statistics for all ports are cleared.

**Syntax**

```
clear lldp statistics [interface <port-list>]
```

| Parameter | Description |
|---|---|
| *<port-list>* | The ports for which the statistics are to be cleared. |

**Mode** Privileged Exec

**Examples** To clear all LLDP statistics for all ports, use the command:

```
awplus# clear lldp statistics
```

**Related commands**

show lldp statistics

show lldp statistics interface

**Command changes** Version 5.4.8-2.1: Command added to AR2050V, AR3050S, AR4050S

# clear lldp table

**Overview** This command clears the table of LLDP information received from neighbors through specified ports. If no port list is supplied, neighbor information is cleared for all ports.

**Syntax**

```
clear lldp table [interface <port-list>]
```

| Parameter | Description |
|---|---|
| *<port-list>* | The ports for which the neighbor information table is to be cleared. |

**Mode** Privileged Exec

**Examples** To clear the entire table of neighbor information received through all ports, use the command:

```
awplus# clear lldp table
```

**Related commands** show lldp neighbors

# debug lldp

**Overview** This command enables specific LLDP debug for specified ports. When LLDP debugging is enabled, diagnostic messages are entered into the system log. If no port list is supplied, the specified debugging is enabled for all ports.

The **no** variant of this command disables specific LLDP debug for specified ports. If no port list is supplied, the specified debugging is disabled for all ports.

**Syntax**

```
debug lldp {[rx][rxpkt][tx][txpkt]} [interface [<port-list>]]
debug lldp operation
no debug lldp {[rx][rxpkt][tx][txpkt]} [interface
[<port-list>]]
no debug lldp operation
no debug lldp all
```

| Parameter | Description |
|---|---|
| rx | LLDP receive debug. |
| rxpkt | Raw LLDPDUs received in hex format. |
| tx | LLDP transmit debug. |
| txpkt | Raw Tx LLDPDUs transmitted in hex format. |
| *<port-list>* | The ports for which debug is to be configured. |
| operation | Debug for LLDP internal operation on the switch. |
| all | Disables all LLDP debugging for all ports. |

**Default** By default no debug is enabled for any ports.

**Mode** Privileged Exec

**Examples** To enable debugging of LLDP transmit with packet dump on all ports, use the command:

```
awplus# debug lldp tx txpkt
```

To turn off all LLDP debugging on all ports, use the command:

```
awplus# no debug lldp all
```

**Related commands**

show debugging lldp

show running-config lldp

terminal monitor

# lldp faststart-count

**Overview** Use this command to set the fast start count for LLDP-MED. The fast start count determines how many fast start advertisements LLDP sends from a port when it starts sending LLDP-MED advertisements from the port, for instance, when it detects a new LLDP-MED capable device.

The **no** variant of this command resets the LLDPD-MED fast start count to the default (3).

**Syntax**

```
lldp faststart-count <1-10>
no lldp faststart-count
```

| Parameter | Description |
|---|---|
| *<1-10>* | The number of fast start advertisements to send. |

**Default** The default fast start count is 3.

**Mode** Global Configuration

**Examples** To set the fast start count to 5, use the command:

```
awplus# configure terminal
awplus(config)# lldp faststart-count 5
```

To reset the fast start count to the default setting (3), use the command:

```
awplus# configure terminal
awplus(config)# no lldp faststart-count
```

**Related commands** show lldp

# lldp holdtime-multiplier

**Overview** This command sets the holdtime multiplier value. The transmit interval is multiplied by the holdtime multiplier to give the Time To Live (TTL) value that is advertised to neighbors.

The **no** variant of this command sets the multiplier back to its default.

**Syntax**

```
lldp holdtime-multiplier <2-10>
no lldp holdtime-multiplier
```

| Parameter | Description |
|---|---|
| *<2-10>* | The multiplier factor. |

**Default** The default holdtime multiplier value is 4.

**Mode** Global Configuration

**Usage** The Time-To-Live defines the period for which the information advertised to the neighbor is valid. If the Time-To-Live expires before the neighbor receives another update of the information, then the neighbor discards the information from its database.

**Examples** To set the holdtime multiplier to 2, use the commands:

```
awplus# configure terminal
awplus(config)# lldp holdtime-multiplier 2
```

To set the holdtime multiplier back to its default, use the commands:

```
awplus# configure terminal
awplus(config)# no lldp holdtime-multiplier 2
```

**Related commands** show lldp

# lldp management-address

**Overview**

This command sets the IPv4 address to be advertised to neighbors (in the Management Address TLV) via the specified ports. This address will override the default address for these ports.

The **no** variant of this command clears the user-configured management IP address advertised to neighbors via the specified ports. The advertised address reverts to the default.

**Syntax**

```
lldp management-address <ipaddr>
no lldp management-address
```

| Parameter | Description |
|---|---|
| *<ipaddr>* | The IPv4 address to be advertised to neighbors, in dotted decimal format. This must be one of the IP addresses already configured on the device. |

**Default**

The local loopback interface primary IPv4 address if set, else the primary IPv4 interface address of the lowest numbered VLAN the port belongs to, else the MAC address of the device's baseboard if no VLAN IP addresses are configured for the port.

**Mode**

Interface Configuration

**Usage notes**

To see the management address that will be advertised, use the show lldp interface command or show lldp local-info command.

**Examples**

To set the management address advertised by port1.0.1 and port1.0.2, to be 192.168.1.6, use the commands:

```
awplus# configure terminal
awplus(config)# interface port1.0.1,port1.0.2
awplus(config-if)# lldp management-address 192.168.1.6
```

To clear the user-configured management address advertised by port1.0.1 and port1.0.2, and revert to using the default address, use the commands:

```
awplus# configure terminal
awplus(config)# interface port1.0.1,port1.0.2
awplus(config-if)# no lldp management-address
```

**Related commands**

show lldp interface

show lldp local-info

**Command changes**

Version 5.4.8-2.1: Command added to AR2050V, AR3050S, AR4050S

# lldp med-notifications

**Overview**

Use this command to enable LLDP to send LLDP-MED Topology Change Detected SNMP notifications relating to the specified ports. The switch sends an SNMP event notification when a new LLDP-MED compliant IP Telephony device is connected to or disconnected from a port on the switch.

Use the **no** variant of this command to disable the sending of LLDP-MED Topology Change Detected notifications relating to the specified ports.

**Syntax**

```
lldp med-notifications
no lldp med-notifications
```

**Default**

The sending of LLDP-MED notifications is disabled by default.

**Mode**

Interface Configuration

**Examples**

To enable the sending of LLDP-MED Topology Change Detected notifications relating to ports port1.0.1 and port1.0.2, use the commands:

```
awplus# configure terminal
awplus(config)# interface port1.0.1,port1.0.2
awplus(config-if)# lldp med-notifications
```

To disable the sending of LLDP-MED notifications relating to port1.0.1 and port1.0.2, use the commands:

```
awplus# configure terminal
awplus(config)# interface port1.0.1,port1.0.2
awplus(config-if)# no lldp med-notifications
```

**Related commands**

lldp notification-interval

lldp notifications

snmp-server enable trap

show lldp interface

**Command changes**

Version 5.4.8-2.1: Command added to AR2050V, AR3050S, AR4050S

# lldp med-tlv-select

**Overview** Use this command to enable LLDP-MED Organizationally Specific TLVs for transmission in LLDP advertisements via the specified ports. The LLDP-MED Capabilities TLV must be enabled before any of the other LLDP-MED Organizationally Specific TLVs are enabled.

Use the **no** variant of this command to disable the specified LLDP-MED Organizationally Specific TLVs for transmission in LLDP advertisements via these ports. In order to disable the LLDP-MED Capabilities TLV, you must also disable the rest of these TLVs. Disabling all these TLVs disables LLDP-MED advertisements.

**Syntax**

```
lldp med-tlv-select [capabilities] [network-policy] [location]
[inventory-management]
```

```
lldp med-tlv-select all
```

```
no lldp med-tlv-select [capabilities] [network-policy]
[location] [inventory-management]
```

```
no lldp med-tlv-select all
```

| Parameter | Description |
|---|---|
| `capabilities` | LLDP-MED Capabilities TLV. When this is enabled, the MAC/PHY Configuration/Status TLV from IEEE 802.3 Organizationally Specific TLVs is also automatically included in LLDP-MED advertisements, whether or not it has been explicitly enabled by the lldp tlv-select command. |
| `network-policy` | Network Policy TLV. This TLV is transmitted if Voice VLAN parameters have been configured using the commands:<br>• switchport voice dscp<br>• switchport voice vlan<br>• switchport voice vlan priority |
| `location` | Location Identification TLV. This TLV is transmitted if location information has been configured using the commands:<br>• location elin-location-id<br>• location civic-location identifier<br>• location civic-location configuration<br>• location coord-location identifier<br>• location coord-location configuration<br>• location elin-location |

| Parameter | Description |
|---|---|
| `inventory-management` | Inventory Management TLV Set, including the following TLVs:<br>• Hardware Revision<br>• Firmware Revision<br>• Software Revision<br>• Serial Number<br>• Manufacturer Name<br>• Model Name<br>• Asset ID |
| `all` | All LLDP-MED Organizationally Specific TLVs. |

**Default** By default LLDP-MED Capabilities, Network Policy, Location Identification and Extended Power-via-MDI TLVs are enabled. Therefore, if LLDP is enabled using the lldp run command, by default LLDP-MED advertisements are transmitted on ports that detect LLDP-MED neighbors connected to them.

**Mode** Interface Configuration

**Usage notes** LLDP-MED TLVs are only sent in advertisements via a port if there is an LLDP-MED-capable device connected to it. To see whether there are LLDP-MED capable devices connected to the ports, use the show lldp neighbors command.

**Examples** To enable inclusion of the Inventory TLV Set in advertisements transmitted via port1.0.1 and port1.0.2, use the commands:

```
awplus# configure terminal
awplus(config)# interface port1.0.1,port1.0.2
awplus(config-if)# lldp med-tlv-select inventory-management
```

To exclude the Inventory TLV Set in advertisements transmitted via port1.0.1 and port1.0.2, use the commands:

```
awplus# configure terminal
awplus(config)# interface port1.0.1,port1.0.2
awplus(config-if)# no lldp med-tlv-select inventory-management
```

To disable LLDP-MED advertisements transmitted via port1.0.1 and port1.0.2, disable all these TLVs using the commands:

```
awplus# configure terminal
awplus(config)# interface port1.0.1,port1.0.2
awplus(config-if)# no lldp med-tlv-select all
```

**Related commands**

lldp tlv-select

location elin-location-id

location civic-location identifier

location civic-location configuration

location coord-location identifier

location coord-location configuration

location elin-location

show lldp interface

switchport voice dscp

switchport voice vlan

switchport voice vlan priority

**Command changes**

Version 5.4.8-2.1: Command added to AR2050V, AR3050S, AR4050S

# lldp non-strict-med-tlv-order-check

**Overview**

Use this command to enable non-strict order checking for LLDP-MED advertisements it receives. That is, use this command to enable LLDP to receive and store TLVs from LLDP-MED advertisements even if they do not use standard TLV order.

Use the **no** variant of this command to disable non-strict order checking for LLDP-MED advertisements, that is, to set strict TLV order checking, so that LLDP discards any LLDP-MED TLVs that occur before the LLDP-MED Capabilities TLV in an advertisement.

**Syntax**

```
lldp non-strict-med-tlv-order-check
no lldp non-strict-med-tlv-order-check
```

**Default**

By default TLV non-strict order checking for LLDP-MED advertisements is disabled. That is, strict order checking is applied to LLDP-MED advertisements, according to ANSI/TIA-1057, and LLDP-MED TLVs in non-standard order are discarded.

**Mode**

Global Configuration

**Usage notes**

The ANSI/TIA-1057 specifies standard order for TLVs in LLDP-MED advertisements, and specifies that if LLDP receives LLDP advertisements with non-standard LLDP-MED TLV order, the TLVs in non-standard order should be discarded. This implementation of LLDP-MED follows the standard: it transmits TLVs in the standard order, and by default discards LLDP-MED TLVs that occur before the LLDP-MED Capabilities TLV in an advertisement. However, some implementations of LLDP transmit LLDP-MED advertisements with non-standard TLV order. To receive and store the data from these non-standard advertisements, enable non-strict order checking for LLDP-MED advertisements using this command.

**Examples**

To enable strict TLV order checking, use the commands:

```
awplus# configure terminal
awplus(config)# lldp tlv-order-check
```

To disable strict TLV order checking, use the commands:

```
awplus# configure terminal
awplus(config)# no lldp tlv-order-check
```

**Related commands**

show running-config lldp

# lldp notification-interval

**Overview** This command sets the notification interval. This is the minimum interval between LLDP SNMP notifications (traps) of each kind (LLDP Remote Tables Change Notification and LLDP-MED Topology Change Notification).

The **no** variant of this command sets the notification interval back to its default.

**Syntax**

```
lldp notification-interval <5-3600>
no lldp notification-interval
```

| Parameter | Description |
|---|---|
| *<5-3600>* | The interval in seconds. |

**Default** The default notification interval is 5 seconds.

**Mode** Global Configuration

**Examples** To set the notification interval to 20 seconds, use the commands:

```
awplus# configure terminal
awplus(config)# lldp notification-interval 20
```

To set the notification interval back to its default, use the commands:

```
awplus# configure terminal
awplus(config)# no lldp notification-interval
```

**Related commands** lldp notifications

show lldp

# lldp notifications

**Overview**

This command enables the sending of LLDP SNMP notifications (traps) relating to specified ports.

The **no** variant of this command disables the sending of LLDP SNMP notifications for specified ports.

**Syntax**

```
lldp notifications
no lldp notifications
```

**Default**

The sending of LLDP SNMP notifications is disabled by default.

**Mode**

Interface Configuration

**Examples**

**Related commands**

lldp notification-interval

show lldp interface

snmp-server enable trap

# lldp port-number-type

**Overview**

This command sets the type of port identifier used to enumerate, that is to count, the LLDP MIB local port entries. The LLDP MIB (IEEE Standard 802.1AB-2005, Section 12, LLDP MIB Definitions.) requires the port number value to count LLDP local port entries.

This command also enables you to optionally set an interface index to enumerate the LLDP MIB local port entries, if required by your management system.

The **no** variant of this command resets the type of port identifier back to the default setting (number).

**Syntax**

```
lldp port-number-type [number|ifindex]
no lldp port-number-type
```

| Parameter | Description |
|---|---|
| number | Set the type of port identifier to a port number to enumerate the LLDP MIB local port entries. |
| ifindex | Set the type of port identifier to an interface index to enumerate the LLDP MIB local port entries. |

**Default**

The default port identifier type is number. The no variant of this command sets the port identifier type to the default.

**Mode**

Global Configuration

**Examples**

To set the type of port identifier used to enumerate LLDP MIB local port entries to port numbers, use the commands:

```
awplus# configure terminal
awplus(config)# lldp port-number-type number
```

To set the type of port identifier used to enumerate LLDP MIB local port entries to interface indexes, use the commands:

```
awplus# configure terminal
awplus(config)# lldp port-number-type ifindex
```

To reset the type of port identifier used to enumerate LLDP MIB local port entries the default (port numbers), use the commands:

```
awplus# configure terminal
awplus(config)# no lldp port-number-type
```

**Related commands**

show lldp

# lldp reinit

**Overview** This command sets the value of the reinitialization delay. This is the minimum time after disabling LLDP on a port before it can reinitialize.

The **no** variant of this command sets the reinitialization delay back to its default setting.

**Syntax**

```
lldp reinit <1-10>
no lldp reinit
```

| Parameter | Description |
|---|---|
| *<1-10>* | The delay in seconds. |

**Default** The default reinitialization delay is 2 seconds.

**Mode** Global Configuration

**Examples** To set the reinitialization delay to 3 seconds, use the commands:

```
awplus# configure terminal
awplus(config)# lldp reinit 3
```

To set the reinitialization delay back to its default, use the commands:

```
awplus# configure terminal
awplus(config)# no lldp reinit
```

**Related commands** show lldp

# lldp run

**Overview** This command enables the operation of LLDP on the device.

The **no** variant of this command disables the operation of LLDP on the device. The LLDP configuration remains unchanged.

**Syntax**

```
lldp run
no lldp run
```

**Default** LLDP is disabled by default.

**Mode** Global Configuration

**Examples** To enable LLDP operation, use the commands:

```
awplus# configure terminal
awplus(config)# lldp run
```

To disable LLDP operation, use the commands:

```
awplus# configure terminal
awplus(config)# no lldp run
```

**Related commands** show lldp

# lldp timer

**Overview** This command sets the value of the transmit interval. This is the interval between regular transmissions of LLDP advertisements.

The **no** variant of this command sets the transmit interval back to its default.

**Syntax**

```
lldp timer <5-32768>
no lldp timer
```

| Parameter | Description |
|---|---|
| *<5-32768>* | The transmit interval in seconds. The transmit interval must be at least four times the transmission delay timer (lldp tx-delay command). |

**Default** The default transmit interval is 30 seconds.

**Mode** Global Configuration

**Examples** To set the transmit interval to 90 seconds, use the commands:

```
awplus# configure terminal
awplus(config)# lldp timer 90
```

To set the transmit interval back to its default, use the commands:

```
awplus# configure terminal
awplus(config)# no lldp timer
```

**Related commands** lldp tx-delay

show lldp

# lldp tlv-select

**Overview** This command enables one or more optional TLVs, or all TLVs, for transmission in LLDP advertisements via the specified ports. The TLVs can be specified in any order; they are placed in LLDP frames in a fixed order (as described in IEEE 802.1AB). The mandatory TLVs (Chassis ID, Port ID, Time To Live, End of LLDPDU) are always included in LLDP advertisements.

In LLDP-MED advertisements the MAC/PHY Configuration/Status TLV will be always be included regardless of whether it is selected by this command.

The **no** variant of this command disables the specified optional TLVs, or all optional TLVs, for transmission in LLDP advertisements via the specified ports.

**Syntax**

```
lldp tlv-select {[<tlv>]...}
lldp tlv-select all
no lldp tlv-select {[<tlv>]...}
no lldp tlv-select all
```

| Parameter | Description |
|---|---|
| *<tlv>* | The TLV to transmit in LLDP advertisements. One of these keywords:<br>• port-description (specified by the description (interface) command)<br>• system-name (specified by the hostname command)<br>• system-description<br>• system-capabilities<br>• management-address<br>• port-vlan<br>• port-and-protocol-vlans<br>• vlan-names<br>• protocol-ids<br>• mac-phy-config<br>• power-management (Power Via MDI TLV)<br>• link-aggregation<br>• max-frame-size |
| `all` | All TLVs. |

**Default** By default no optional TLVs are included in LLDP advertisements. The MAC/PHY Configuration/Status TLV ( **mac-phy-config**) is included in LLDP-MED advertisements whether or not it is selected by this command.

**Mode** Interface Configuration

## Examples

## Related commands

description (interface)

hostname

lldp med-tlv-select

show lldp interface

show lldp local-info

# lldp transmit receive

**Overview**

This command enables transmission and/or reception of LLDP advertisements to or from neighbors through the specified ports.

The **no** variant of this command disables transmission and/or reception of LLDP advertisements through specified ports.

**Syntax**

```
lldp {[transmit] [receive]}
no lldp {[transmit] [receive]}
```

| Parameter | Description |
|---|---|
| `transmit` | Enable or disable transmission of LLDP advertisements via this port or ports. |
| `receive` | Enable or disable reception of LLDP advertisements via this port or ports. |

**Default**

LLDP advertisement transmission and reception are enabled on all ports by default.

**Mode**

Interface Configuration

**Examples**

To enable transmission of LLDP advertisements on port1.0.1 and port1.0.2, use the commands:

```
awplus# configure terminal
awplus(config)# interface port1.0.1,port1.0.2
awplus(config-if)# lldp transmit
```

To enable LLDP advertisement transmission and reception on port1.0.1 and port1.0.2, use the commands:

```
awplus# configure terminal
awplus(config)# interface port1.0.1,port1.0.2
awplus(config-if)# lldp transmit receive
```

To disable LLDP advertisement transmission and reception on port1.0.1 and port1.0.2, use the commands:

```
awplus# configure terminal
awplus(config)# interface port1.0.1,port1.0.2
awplus(config-if)# no lldp transmit receive
```

**Related commands**

show lldp interface

**Command changes**

Version 5.4.8-2.1: Command added to AR2050V, AR3050S, AR4050S

# lldp tx-delay

**Overview** This command sets the value of the transmission delay timer. This is the minimum time interval between transmitting LLDP advertisements due to a change in LLDP local information.

The **no** variant of this command sets the transmission delay timer back to its default setting.

**Syntax**

```
lldp tx-delay <1-8192>
no lldp tx-delay
```

| Parameter | Description |
|---|---|
| *<1-8192>* | The transmission delay in seconds. The transmission delay cannot be greater than a quarter of the transmit interval (lldp timer command). |

**Default** The default transmission delay timer is 2 seconds.

**Mode** Global Configuration

**Examples** To set the transmission delay timer to 12 seconds, use the commands:

```
awplus# configure terminal
awplus(config)# lldp tx-delay 12
```

To set the transmission delay timer back to its default, use the commands:

```
awplus# configure terminal
awplus(config)# no lldp tx-delay
```

**Related commands** lldp timer

show lldp

# location civic-location configuration

**Overview** Use these commands to configure a civic address location. The country parameter must be specified first, and at least one of the other parameters must be configured before the location can be assigned to a port.

Use the **no** variants of this command to delete civic address parameters from the location.

**Syntax**

```
country <country>
state <state>
no state
county <county>
no county
city <city>
no city
division <division>
no division
neighborhood <neighborhood>
no neighborhood
street-group <street-group>
no street-group
leading-street-direction <leading-street-direction>
no leading-street-direction
trailing-street-suffix <trailing-street-suffix>
no trailing-street-suffix
street-suffix <street-suffix>
no street-suffix
house-number <house-number>
no house-number
house-number-suffix <house-number-suffix>
no house-number-suffix
landmark <landmark>
no landmark
additional-information <additional-information>
no additional-information
```

**Syntax (cont.)**

```
name <name>
no name
postalcode <postalcode>
no postalcode
building <building>
no building
unit <unit>
no unit
floor <floor>
no floor
room <room>
no room
place-type <place-type>
no place-type
postal-community-name <postal-community-name>
no postal-community-name
post-office-box <post-office-box>
no post-office-box
additional-code <additional-code>
no additional-code
seat <seat>
no seat
primary-road-name <primary-road-name>
no primary-road-name
road-section <road-section>
no road-section
branch-road-name <branch-road-name>
no branch-road-name
sub-branch-road-name <sub-branch-road-name>
no sub-branch-road-name
street-name-pre-modifier <street-name-pre-modifier>
no street-name-pre-modifier
streetname-post-modifier <streetname-post-modifier>
no streetname-post-modifier
```

| Parameter | Description |
|---|---|
| *<country>* | Upper-case two-letter country code, as specified in ISO 3166. |
| *<state>* | State (Civic Address (CA) Type 1): national subdivisions (state, canton, region). |
| *<county>* | County (CA Type 2): County, parish, gun (JP), district (IN). |
| *<city>* | City (CA Type 3): city, township, shi (JP). |
| *<division>* | City division (CA Type 4): City division, borough, city district, ward, chou (JP). |
| *<neighborhood>* | Neighborhood (CA Type 5): neighborhood, block. |
| *<street-group>* | Street group (CA Type 6): group of streets below the neighborhood level. |
| *<leading-street-direction>* | Leading street direction (CA Type 16). |
| *<trailing-street-suffix>* | Trailing street suffix (CA Type 17). |
| *<street-suffix>* | Street suffix (CA Type 18): street suffix or type. |
| *<house-number>* | House number (CA Type 19). |
| *<house-number-suffix>* | House number suffix (CA Type 20). |
| *<landmark>* | Landmark or vanity address (CA Type 21). |
| *<additional-information>* | Additional location information (CA Type 22). |
| *<name>* | Name (CA Type 23): residence and office occupant. |
| *<postal-code>* | Postal/zip code (CA Type 24). |
| *<building>* | Building (CA Type 25): structure. |
| *<unit>* | Unit (CA Type 26): apartment, suite. |
| *<floor>* | Floor (CA Type 27). |
| *<room>* | Room (CA Type 28). |
| *<place-type>* | Type of place (CA Type 29). |
| *<postal-community-name>* | Postal community name (CA Type 30). |
| *<post-office-box>* | Post office box (P.O. Box) (CA Type 31). |
| *<additional-code>* | Additional code (CA Type 32). |
| *<seat>* | Seat (CA Type 33): seat (desk, cubicle, workstation). |
| *<primary-road-name>* | Primary road name (CA Type 34). |
| *<road-section>* | Road section (CA Type 35). |

| Parameter | Description |
|---|---|
| *<branch-road-name>* | Branch road name (CA Type 36). |
| *<sub-branch-road-name>* | Sub-branch road name (CA Type 37). |
| *<street-name-pre-modifier>* | Street name pre-modifier (CA Type 38). |
| *<street-name-post-modifier>* | Street name post-modifier (CA Type 39). |

**Default** By default no civic address location information is configured.

**Mode** Civic Address Location Configuration

**Usage notes** The **country** parameter must be configured before any other parameters can be configured; this creates the location. The country parameter cannot be deleted. One or more of the other parameters must be configured before the location can be assigned to a port. The country parameter must be entered as an upper-case two-letter country code, as specified in ISO 3166. All other parameters are entered as alpha-numeric strings. Do not configure all the civic address parameters (this would generate TLVs that are too long). Configure a subset of these parameters—enough to consistently and precisely identify the location of the device. If the location is to be used for Emergency Call Service (ECS), the particular ECS application may have guidelines for configuring the civic address location. For more information about civic address format, see the LLDP Feature Overview and Configuration Guide.

To specify the civic address location, use the location civic-location identifier command. To delete the civic address location, use the **no** variant of the **location civic-location identifier** command. To assign the civic address location to particular ports, so that it can be advertised in TLVs from those ports, use the command location civic-location-id command.

**Examples** To configure civic address location 1 with location "27 Nazareth Avenue, Christchurch, New Zealand" in civic-address format, use the commands:

```
awplus# configure terminal
awplus(config)# location civic-location identifier 1
awplus(config-civic)# country NZ
awplus(config-civic)# city Christchurch
awplus(config-civic)# primary-road-name Nazareth
awplus(config-civic)# street-suffix Avenue
awplus(config-civic)# house-number 27
```

**Related commands**

location civic-location-id

location civic-location identifier

show lldp local-info

show location

# location civic-location identifier

**Overview**

Use this command to enter the Civic Address Location Configuration mode to configure the specified location.

Use the **no** variant of this command to delete a civic address location. This also removes the location from any ports it has been assigned to.

**Syntax**

```
location civic-location identifier <civic-loc-id>
no location civic-location identifier <civic-loc-id>
```

| Parameter | Description |
|---|---|
| *<civic-loc-id>* | A unique civic address location ID, in the range 1 to 4095. |

**Default**

By default there are no civic address locations.

**Mode**

Global Configuration

**Usage notes**

To configure the location information for this civic address location identifier, use the location civic-location configuration command. To associate this civic location identifier with particular ports, use the location elin-location-id command.

Up to 400 locations can be configured on the switch for each type of location information, up to a total of 1200 locations.

**Examples**

To enter Civic Address Location Configuration mode for the civic address location with ID 1, use the commands:

```
awplus# configure terminal
awplus(config)# location civic-location identifier 1
awplus(config-civic)#
```

To delete the civic address location with ID 1, use the commands:

```
awplus# configure terminal
awplus(config)# no location civic-location identifier 1
```

**Related commands**

location civic-location-id

location civic-location configuration

show location

show running-config lldp

# location civic-location-id

**Overview**

Use this command to assign a civic address location to the ports. The civic address location must already exist. This replaces any previous assignment of civic address location for the ports. Up to one location of each type can be assigned to a port.

Use the **no** variant of this command to remove a location identifier from the ports.

**Syntax**

```
location civic-location-id <civic-loc-id>
no location civic-location-id [<civic-loc-id>]
```

| Parameter | Description |
|---|---|
| *<civic-loc-id>* | Civic address location ID, in the range 1 to 4095. |

**Default**

By default no civic address location is assigned to ports.

**Mode**

Interface Configuration

**Usage notes**

The civic address location associated with a port can be transmitted in Location Identification TLVs via the port.

Before using this command, create the location using the following commands:

- location civic-location identifier command
- location civic-location configuration command

If a civic-address location is deleted using the **no** variant of the location civic-location identifier command, it is automatically removed from all ports.

**Examples**

To assign the civic address location 1 to port1.0.1, use the commands:

```
awplus# configure terminal
awplus(config)# interface port1.0.1
awplus(config-if)# location civic-location-id 1
```

To remove a civic address location from port1.0.1, use the commands:

```
awplus# configure terminal
awplus(config)# interface port1.0.1
awplus(config-if)# no location civic-location-id
```

**Related commands**

lldp med-tlv-select

location civic-location identifier

location civic-location configuration

show location

**Command changes**

Version 5.4.8-2.1: Command added to AR2050V, AR3050S, AR4050S

# location coord-location configuration

**Overview** Use this command to configure a coordinate-based location. All parameters must be configured before assigning this location identifier to a port.

**Syntax**

```
latitude <latitude>
lat-resolution <lat-resolution>
longitude <longitude>
long-resolution <long-resolution>
altitude <altitude> {meters|floor}
alt-resolution <alt-resolution>
datum {wgs84|nad83-navd|nad83-mllw}
```

| Parameter | Description |
|---|---|
| *<lat-resolution>* | Latitude resolution, as a number of valid bits, in the range 0 to 34. |
| *<latitude>* | Latitude value in degrees in the range -90.0 to 90.0 |
| *<long-resolution>* | Longitude resolution, as a number of valid bits, in the range 0 to 34. |
| *<longitude>* | Longitude value in degrees, in the range -180.0 to 180.0. |
| *<alt-resolution>* | Altitude resolution, as a number of valid bits, in the range 0 to 30. A resolution of 0 can be used to indicate an unknown value. |
| *<altitude>* | Altitude value, in meters or floors. |
| `meters` | The altitude value is in meters. |
| `floors` | The altitude value is in floors. |
| `datum` | The geodetic system (or datum) that the specified coordinate values are based on. |
| `wgs84` | World Geodetic System 1984. |
| `nad83-navd` | North American Datum 1983 - North American Vertical Datum. |
| `nad83-mllw` | North American Datum 1983 - Mean Lower Low Water vertical datum. |

**Default** By default no coordinate location information is configured.

**Mode** Coordinate Configuration

**Usage** Latitude and longitude values are always stored internally, and advertised in the Location Identification TLV, as 34-bit fixed-point binary numbers, with a 25-bit fractional part, irrespective of the number of digits entered by the user. Likewise

altitude is stored as a 30- bit fixed point binary number, with an 8-bit fractional part. Because the user-entered decimal values are stored as fixed point binary numbers, they cannot always be represented exactly—the stored binary number is converted to a decimal number for display in the output of the show location command. For example, a user-entered latitude value of "2.77" degrees is displayed as "2.769999980926513671875000".

The **lat-resolution**, **long-resolution**, and **alt-resolution** parameters allow the user to specify the resolution of each coordinate element as the number of valid bits in the internally-stored binary representation of the value. These resolution values can be used by emergency services to define a search area.

To specify the coordinate identifier, use the location coord-location identifier command. To remove coordinate information, delete the coordinate location by using the **no** variant of that command. To associate the coordinate location with particular ports, so that it can be advertised in TLVs from those ports, use the location elin-location-id command.

**Example**

To configure the location for the White House in Washington DC, which has the coordinates based on the WGS84 datum of 38.89868 degrees North (with 22 bit resolution), 77.03723 degrees West (with 22 bit resolution), and 15 meters height (with 9 bit resolution), use the commands:

```
awplus# configure terminal
awplus(config)# location coord-location identifier 1
awplus(config-coord)# la-resolution 22
awplus(config-coord)# latitude 38.89868
awplus(config-coord)# lo-resolution 22
awplus(config-coord)# longitude -77.03723
awplus(config-coord)# alt-resolution 9
awplus(config-coord)# altitude 15 meters
awplus(config-coord)# datum wgs84
```

**Related commands**

location coord-location-id

location coord-location identifier

show lldp local-info

show location

# location coord-location identifier

**Overview**

Use this command to enter Coordinate Location Configuration mode for this coordinate location.

Use the **no** variant of this command to delete a coordinate location. This also removes the location from any ports it has been assigned to.

**Syntax**

```
location coord-location identifier <coord-loc-id>
no location coord-location identifier <coord-loc-id>
```

| Parameter | Description |
|---|---|
| *<coord-loc-id>* | A unique coordinate location identifier, in the range 1 to 4095. |

**Default**

By default there are no coordinate locations.

**Mode**

Global Configuration

**Usage**

Up to 400 locations can be configured on the switch for each type of location information, up to a total of 1200 locations.

To configure this coordinate location, use the location coord-location configuration command. To associate this coordinate location with particular ports, so that it can be advertised in TLVs from those ports, use the location coord-location-id command.

**Examples**

To enter Coordinate Location Configuration mode to configure the coordinate location with ID 1, use the commands:

```
awplus# configure terminal
awplus(config)# location coord-location identifier 1
awplus(config-coord)#
```

To delete coordinate location 1, use the commands:

```
awplus# configure terminal
awplus(config)# no location coord-location identifier 1
```

**Related commands**

location coord-location-id

location coord-location configuration

show lldp local-info

show location

# location coord-location-id

**Overview**

Use this command to assign a coordinate location to the ports. The coordinate location must already exist. This replaces any previous assignment of coordinate location for the ports. Up to one location of each type can be assigned to a port.

Use the **no** variant of this command to remove a location from the ports.

**Syntax**

```
location coord-location-id <coord-loc-id>
no location coord-location-id [<coord-loc-id>]
```

| Parameter | Description |
|---|---|
| *<coord-loc-id>* | Coordinate location ID, in the range 1 to 4095. |

**Default**

By default no coordinate location is assigned to ports.

**Mode**

Interface Configuration

**Usage notes**

The coordinate location associated with a port can be transmitted in Location Identification TLVs via the port.

Before using this command, configure the location using the following commands:

- location coord-location identifier command
- location coord-location configuration command

If a coordinate location is deleted using the **no** variant of the location coord-location identifier command, it is automatically removed from all ports.

**Examples**

To assign coordinate location 1 to port1.0.1, use the commands:

```
awplus# configure terminal
awplus(config)# interface port1.0.1
awplus(config-if)# location coord-location-id 1
```

To remove a coordinate location from port1.0.1, use the commands:

```
awplus# configure terminal
awplus(config)# interface port1.0.1
awplus(config-if)# no location coord-location-id
```

**Related commands**

lldp med-tlv-select

location coord-location identifier

location coord-location configuration

show location

**Command changes** Version 5.4.8-2.1: Command added to AR2050V, AR3050S, AR4050S

# location elin-location

**Overview** Use this command to create or modify an ELIN location.

Use the **no** variant of this command to delete an ELIN location, and remove it from any ports it has been assigned to.

**Syntax**

```
location elin-location <elin> identifier <elin-loc-id>
no location elin-location identifier <elin-loc-id>
```

| Parameter | Description |
|---|---|
| *<elin>* | Emergency Location Identification Number (ELIN) for Emergency Call Service (ECS), in the range 10 to 25 digits long. In North America, ELINs are typically 10 digits long. |
| *<elin-loc-id>* | A unique ELIN location identifier, in the range 1 to 4095. |

**Default** By default there are no ELIN location identifiers.

**Mode** Global Configuration

**Usage** Up to 400 locations can be configured on the switch for each type of location information, up to a total of 1200 locations.

To assign this ELIN location to particular ports, so that it can be advertised in TLVs from those ports, use the location elin-location-id command.

**Examples** To create a new ELIN location with ID 1, and configure it with ELIN "1234567890", use the commands:

```
awplus# configure terminal
awplus(config)# location elin-location 1234567890 identifier 1
```

To delete existing ELIN location with ID 1, use the commands:

```
awplus# configure terminal
awplus(config)# no location elin-location identifier 1
```

**Related commands**

location elin-location-id

show lldp local-info

show location

# location elin-location-id

**Overview**

Use this command to assign an ELIN location to the ports. The ELIN location must already exist. This replaces any previous assignment of ELIN location for the ports. Up to one location of each type can be assigned to a port.

Use the **no** variant of this command to remove a location identifier from the ports.

**Syntax**

```
location elin-location-id <elin-loc-id>
no location elin-location-id [<elin-loc-id>]
```

| Parameter | Description |
|---|---|
| *<elin-loc-id>* | ELIN location identifier, in the range 1 to 4095. |

**Default**

By default no ELIN location is assigned to ports.

**Mode**

Interface Configuration

**Usage notes**

An ELIN location associated with a port can be transmitted in Location Identification TLVs via the port.

Before using this command, configure the location using the location elin-location command.

If an ELIN location is deleted using the **no** variant of one of the location elin-location command, it is automatically removed from all ports.

**Examples**

To assign ELIN location 1 to port1.0.1, use the commands:

```
awplus# configure terminal
awplus(config)# interface port1.0.1
awplus(config-if)# location elin-location-id 1
```

To remove ELIN location 1 from port1.0.1, use the commands:

```
awplus# configure terminal
awplus(config)# interface port1.0.1
awplus(config-if)# no location elin-location-id 1
```

**Related commands**

lldp med-tlv-select

location elin-location

show location

**Command changes**

Version 5.4.8-2.1: Command added to AR2050V, AR3050S, AR4050S

# show debugging lldp

**Overview** This command displays LLDP debug settings for specified ports. If no port list is supplied, LLDP debug settings for all ports are displayed.

**Syntax**

```
show debugging lldp [interface <port-list>]
```

| Parameter | Description |
|---|---|
| *<port-list>* | The ports for which the LLDP debug settings are shown. |

**Mode** User Exec and Privileged Exec

**Examples** To display LLDP debug settings for all ports, use the command:

```
awplus# show debugging lldp
```

**Output** Figure 58-1: Example output from the **show debugging lldp** command

**Table 1:** Parameters in the output of the **show debugging lldp** command

| Parameter | Description |
|---|---|
| Port | Port name. |
| Rx | Whether debugging of LLDP receive is enabled on the port. |
| RxPkt | Whether debugging of LLDP receive packet dump is enabled on the port. |
| Rx | Whether debugging of LLDP transmit is enabled on the port. |
| RxPkt | Whether debugging of LLDP transmit packet dump is enabled on the port. |

**Related commands** debug lldp

# show lldp

**Overview** This command displays LLDP status and global configuration settings.

**Syntax** `show lldp`

**Mode** User Exec and Privileged Exec

**Example** To display LLDP status and global configuration settings, use the command:

```
awplus# show lldp
```

**Output**

**Table 2:** Example output from the **show lldp** command

```
awplus# show lldp

LLDP Global Configuration:              [Default Values]
LLDP Status ............... Enabled     [Disabled]
Notification Interval ..... 5 secs      [5]
Tx Timer Interval ......... 30 secs     [30]
Hold-time Multiplier ...... 4           [4]
(Computed TTL value ....... 120 secs)
Reinitialization Delay .... 2 secs      [2]
Tx Delay .................. 2 secs      [2]

Port Number Type........... Ifindex     [Port-Number]
Fast Start Count .......... 5           [3]

LLDP Global Status:
Total Neighbor Count ...... 47
Neighbors table last updated 0 hrs 0 mins 43 secs ago
```

**Table 3:** Parameters in the output of the **show lldp** command

| Parameter | Description |
|---|---|
| `LLDP Status` | Whether LLDP is enabled. Default is disabled. |
| `Notification Interval` | Minimum interval between LLDP notifications. |
| `Tx Timer Interval` | Transmit interval between regular transmissions of LLDP advertisements. |
| `Hold-time Multiplier` | The holdtime multiplier. The transmit interval is multiplied by the holdtime multiplier to give the Time To Live (TTL) value that is advertised to neighbors. |
| `Reinitialization Delay` | The reinitialization delay. This is the minimum time after disabling LLDP transmit on a port before it can reinitialize again. |

**Table 3:** Parameters in the output of the **show lldp** command (cont.)

| Parameter | Description |
|---|---|
| `Tx Delay` | The transmission delay. This is the minimum time interval between transmitting advertisements due to a change in LLDP local information. |
| `Port Number Type` | The type of port identifier used to enumerate LLDP MIB local port entries, as set by the lldp port-number-type command. |
| `Fast Start Count` | The number of times fast start advertisements are sent for LLDP-MED. |
| `Total Neighbor Count` | Number of LLDP neighbors discovered on all ports. |
| `Neighbors table last updated` | The time since the LLDP neighbor table was last updated. |

**Related commands**

show lldp interface

show running-config lldp

# show lldp interface

**Overview** This command displays LLDP configuration settings for specified ports. If no port list is specified, LLDP configuration for all ports is displayed.

**Syntax** `show lldp interface [<port-list>]`

| Parameter | Description |
|---|---|
| `<port-list>` | The ports for which the LLDP configuration settings are to be shown. |

**Mode** User Exec and Privileged Exec

**Examples** To display LLDP configuration settings for all ports, use the command:

```
awplus# show lldp interface
```

**Output** Figure 58-2: Example output from the **show lldp interface** command

**Table 4:** Parameters in the output of the **show lldp interface** command

| Parameter | Description |
|---|---|
| `Port` | Port name. |
| `Rx` | Whether reception of LLDP advertisements is enabled on the port. |
| `Tx` | Whether transmission of LLDP advertisements is enabled on the port. |
| `Notif` | Whether sending SNMP notification for LLDP is enabled on the port:<br>• RM = Remote Tables Change Notification<br>• TP = LLDP-MED Topology Change Notification |
| `Management Addr` | Management address advertised to neighbors. |
| `Base TLVs Enabled for Tx` | List of optional Base TLVs enabled for transmission:<br>• Pd = Port Description<br>• Sn =System Name<br>• Sd = System Description<br>• Sc =System Capabilities<br>• Ma = Management Address |

**Table 4:** Parameters in the output of the **show lldp interface** command (cont.)

| Parameter | Description |
|---|---|
| `802.1 TLVs Enabled for Tx` | List of optional 802.1 TLVs enabled for transmission:<br>• Pv = Port VLAN ID<br>• Pp = Port And Protocol VLAN ID<br>• Vn = VLAN Name<br>• Pi =Protocol Identity |
| `802.3 TLVs Enabled for Tx` | List of optional 802.3 TLVs enabled for transmission:<br>• Mp = MAC/PHY Configuration/Status<br>• Po = Power Via MDI (PoE)<br>• La = Link Aggregation<br>• Mf = Maximum Frame Size |
| `MED TLVs Enabled for Tx` | List of optional LLDP-MED TLVs enabled for transmission:<br>• Mc = LLDP-MED Capabilities<br>• Np = Network Policy<br>• Lo = Location Information,<br>• Pe = Extended Power-Via-MDI<br>• In = Inventory |

**Related commands**

show lldp

show running-config lldp

# show lldp local-info

**Overview** This command displays local LLDP information that can be transmitted through specified ports. If no port list is entered, local LLDP information for all ports is displayed.

**Syntax** `show lldp local-info [base] [dot1] [dot3] [med] [interface <port-list>]`

| Parameter | Description |
|---|---|
| `base` | Information for base TLVs. |
| `dot1` | Information for 802.1 TLVs. |
| `dot3` | Information for 802.3 TLVs. |
| `med` | Information for LLDP-MED TLVs. |
| `<port-list>` | The ports for which the local information is to be shown. |

**Mode** User Exec and Privileged Exec

**Usage notes** Whether and which local information is transmitted in advertisements via a port depends on:

- whether the port is set to transmit LLDP advertisements (lldp transmit receive command)
- which TLVs it is configured to send (lldp tlv-select command, lldp med-tlv-select command)

**Examples** To display local information transmitted via all ports, use the command:

```
awplus# show lldp local-info
```

**Output** Figure 58-3: Example output from **show lldp local-info**

```
LLDP Local Information:

Local port1.0.1:
  Chassis ID Type .................. MAC address
  Chassis ID ....................... 0015.77c9.7453
  Port ID Type ..................... Interface alias
  Port ID .......................... port1.0.1
  TTL .............................. 120
  Port Description ................. [not configured]
```

```
System Name ....................... awplus
System Description ............... Allied Telesis router/switch, AW+
                                   v5.4.6
System Capabilities - Supported .. Bridge, Router
                    - Enabled .... Bridge, Router
Management Address ............... 192.168.1.6
Port VLAN ID (PVID) .............. 1
Port & Protocol VLAN - Supported . Yes
                     - Enabled ... No
                     - VIDs ...... 0
VLAN Names ....................... default
Protocol IDs ..................... 9000, 0026424203000000, 888e01, aaaa03,
                                   88090101, 00540000e302, 0800, 0806, 86dd
MAC/PHY Auto-negotiation ......... Supported, Enabled
     Advertised Capability ....... 1000BaseTFD, 100BaseTXFD, 100BaseTX,
                                   10BaseTFD, 10BaseT
     Operational MAU Type ........ 1000BaseTFD (30)
Power Via MDI (PoE) .............. Supported, Enabled
     Port Class .................. PSE
     Pair Control Ability ........ Disabled
     Power Class ................. Unknown
Link Aggregation ................. Supported, Disabled
Maximum Frame Size ............... 1522
LLDP-MED Device Type ............. Network Connectivity
LLDP-MED Capabilities ............ LLDP-MED Capabilities, Network Policy,
                                   Location Identification,
                                   Extended Power - PSE, Inventory
Network Policy ................... [not configured]
Location Identification .......... Civic Address
     Country Code ................ NZ
     City ........................ Christchurch
     Street Suffix ............... Avenue
     House Number ................ 27
     Primary Road Name ........... Nazareth
Location Identification .......... ELIN
     ELIN ........................ 123456789012
LLDP-MED Device Type ............. Network Connectivity
LLDP-MED Capabilities ............ LLDP-MED Capabilities, Network Policy,
                                   Location Identification,
                                   Extended Power - PSE, Inventory
Extended Power Via MDI (PoE) ..... PSE
     Power Source ................ Primary Power
     Power Priority .............. Low
     Power Value ................. 4.4 Watts
Inventory Management:
     Hardware Revision ........... A-0
     Firmware Revision ........... 1.1.0
     Software Revision ........... v5.4.6
     Serial Number ............... G1Q78900B
     Manufacturer Name ........... Allied Telesis Inc.
     Model Name .................. AT-x930-52GPX
     Asset ID .................... [zero length]
```

Table 58-1: Parameters in the output of **show lldp local-info**

| Parameter | Description |
|---|---|
| `Chassis ID Type` | Type of the Chassis ID. |
| `Chassis ID` | Chassis ID that uniquely identifies the local device. |
| `Port ID Type` | Type of the Port ID. |
| `Port ID` | Port ID of the local port through which advertisements are sent. |
| `TTL` | Number of seconds that the information advertised by the local port remains valid. |
| `Port Description` | Port description of the local port, as specified by the description (interface) command. |
| `System Name` | System name, as specified by the hostname command. |
| `System Description` | System description. |
| `System Capabilities (Supported)` | Capabilities that the local port supports. |
| `System Capabilities (Enabled)` | Enabled capabilities on the local port. |
| `Management Addresses` | Management address associated with the local port. To change this, use the lldp management-address command. |
| `Port VLAN ID (PVID)` | VLAN identifier associated with untagged or priority tagged frames received via the local port. |
| `Port & Protocol VLAN (Supported)` | Whether Port & Protocol VLANs (PPV) is supported on the local port. |
| `Port & Protocol VLAN (Enabled)` | Whether the port is in one or more Port & Protocol VLANs. |
| `Port & Protocol VLAN (VIDs)` | List of identifiers for Port & Protocol VLANs that the port is in. |
| `VLAN Names` | List of VLAN names for VLANs that the local port is assigned to. |
| `Protocol IDs` | List of protocols that are accessible through the local port. |
| `MAC/PHY Auto-negotiation` | Auto-negotiation support and current status of the 802.3 LAN on the local port. |

Table 58-1: Parameters in the output of **show lldp local-info** (cont.)

| Parameter | Description |
|---|---|
| `Power Via MDI (PoE)` | PoE-capability and current status on the local port. |
| `Port Class` | Whether the device is a PSE (Power Sourcing Entity) or a PD (Powered Device) |
| `Pair Control Ability` | Whether power pair selection can be controlled |
| `Power Pairs` | Which power pairs are selected for power ("Signal Pairs" or "Spare Pairs") if pair selection can be controlled |
| `Power Class` | The power class of the PD device on the port (class 0, 1, 2, 3 or 4) |
| `Link Aggregation` | Whether the link is capable of being aggregated and it is currently in an aggregation. |
| `Aggregated Port-ID` | Aggregated port identifier. |
| `Maximum Frame Size` | The maximum frame size capability of the implemented MAC and PHY. |
| `LLDP-MED Device Type` | LLDP-MED device type |
| `LLDP-MED Capabilities` | Capabilities LLDP-MED capabilities supported on the local port. |
| `Network Policy` | List of network policies configured on the local port. |
| `VLAN ID` | VLAN identifier for the port for the specified application type |
| `Tagged Flag` | Whether the VLAN ID is to be used as tagged or untagged |
| `Layer-2 Priority:` | Layer 2 User Priority (in the range 0 to 7) |
| `DSCP Value` | Diffserv codepoint (in the range 0 to 63) |
| `Location Identification` | Location configured on the local port. |
| `Extended Power Via MDI (PoE)` | PoE-capability and current status of the PoE parameters for Extended Power-Via-MDI TLV on the local port. |
| `Power Source` | The power source the switch currently uses; either primary power or backup power. |
| `Power Priority` | The power priority configured on the port; either critical, high or low. |

Table 58-1: Parameters in the output of **show lldp local-info** (cont.)

| Parameter | Description |
|---|---|
| `Power Value` | The total power the switch can source over a maximum length cable to a PD device on the port. The value shows the power value in Watts from the PD side. |
| `Inventory Management` | Inventory information for the device. |

**Related commands**

description (interface)

hostname

lldp transmit receive

# show lldp neighbors

**Overview** This command displays a summary of information received from neighbors via specified ports. If no port list is supplied, neighbor information for all ports is displayed.

**Syntax** `show lldp neighbors [interface <port-list>]`

| Parameter | Description |
|---|---|
| *<port-list>* | The ports for which the neighbor information is to be shown. |

**Mode** User Exec and Privileged Exec

**Examples** To display neighbor information received via all ports, use the command:

```
awplus# show lldp neighbors
```

**Output** Figure 58-4: Example output from the **show lldp neighbors** command

**Table 59:** Parameters in the output of the **show lldp neighbors** command

| Parameter | Description |
|---|---|
| `Local Port` | Local port on which the neighbor information was received. |
| `Neighbor Chassis ID` | Chassis ID that uniquely identifies the neighbor. |
| `Neighbor Port Name` | Port ID of the neighbor. |
| `Neighbor Sys Name` | System name of the LLDP neighbor. |
| `Neighbor Capability` | Capabilities that are supported and enabled on the neighbor. |
| `System Capability` | System Capabilities of the LLDP neighbor. |
| `MED Device Type` | LLDP-MED Device class (Class I, II, III or Network Connectivity) |
| `MED Power Source` | LLDP-MED Power Source |

**Related commands** show lldp neighbors detail

# show lldp neighbors detail

**Overview** This command displays in detail the information received from neighbors via specified ports. If no port list is supplied, detailed neighbor information for all ports is displayed.

**Syntax** `show lldp neighbors detail [base] [dot1] [dot3] [med] [interface <port-list>]`

| Parameter | Description |
|---|---|
| `base` | Information for base TLVs. |
| `dot1` | Information for 802.1 TLVs. |
| `dot3` | Information for 803.1 TLVs. |
| `med` | Information for LLDP-MED TLVs. |
| `<port-list>` | The ports for which the neighbor information is to be shown. |

**Mode** User Exec and Privileged Exec

**Examples** To display detailed neighbor information received via all ports, use the command:

```
awplus# show lldp neighbors detail
```

**Output** Figure 58-5: Example output from the **show lldp neighbors detail** command

```
awplus#show lldp neighbors detail interface port1.0.1
LLDP Detailed Neighbor Information:

Local port1.0.1:
  Neighbors table last updated 0 hrs 0 mins 40 secs ago
  Chassis ID Type ................. MAC address
  Chassis ID ...................... 0004.cd28.8754
  Port ID Type .................... Interface alias
  Port ID ......................... port1.0.6
  TTL ............................. 120 (secs)
  Port Description ................ [zero length]
  System Name ..................... awplus
  System Description ............... Allied Telesis router/switch, AW+ v5.4.6
  System Capabilities - Supported .. Bridge, Router
                      - Enabled .... Bridge, Router
  Management Addresses ............ 0004.cd28.8754
  Port VLAN ID (PVID) ............. 1
  Port & Protocol VLAN - Supported . Yes
                       - Enabled ... Yes
                       - VIDs ...... 5
  VLAN Names ...................... default, vlan5
  Protocol IDs .................... 9000, 0026424203000000, 888e01, 8100,
                                    88090101, 00540000e302, 0800, 0806, 86dd
  MAC/PHY Auto-negotiation ........ Supported, Enabled
       Advertised Capability ...... 1000BaseTFD, 100BaseTXFD, 100BaseTX,
                                    10BaseTFD, 10BaseT
       Operational MAU Type ........ 1000BaseTFD (30)
  Power Via MDI (PoE) ............. [not advertised]
  Link Aggregation ................ Supported, Disabled
  Maximum Frame Size .............. 1522 (Octets)
  LLDP-MED Device Type ............ Network Connectivity
  LLDP-MED Capabilities ........... LLDP-MED Capabilities, Network Policy,
                                    Location Identification,
                                    Extended Power - PSE, Inventory
  Network Policy .................. [not advertised]
  Location Identification ......... [not advertised]
  Extended Power Via MDI (PoE) ..... PD
           Power Source ........... PSE
           Power Priority ......... High
           Power Value ............ 4.4 Watts
  Inventory Management:
           Hardware Revision ...... X1-0
           Firmware Revision ...... 1.1.0
           Software Revision ...... v5.4.6
           Serial Number .......... M1NB73008
           Manufacturer Name ...... Allied Telesis Inc.
           Model Name ............. x230-28GP
           Asset ID ............... [zero length]
```

**Table 60:** Parameters in the output of the **show lldp neighbors detail** command

| Parameter | Description |
|---|---|
| `Chassis ID Type` | Type of the Chassis ID. |
| `Chassis ID` | Chassis ID that uniquely identifies the neighbor. |
| `Port ID Type` | Type of the Port ID. |
| `Port ID` | Port ID of the neighbor. |
| `TTL` | Number of seconds that the information advertised by the neighbor remains valid. |
| `Port Description` | Port description of the neighbor's port. |
| `System Name` | Neighbor's system name. |
| `System Description` | Neighbor's system description. |
| `System Capabilities (Supported)` | Capabilities that the neighbor supports. |
| `System Capabilities (Enabled)` | Capabilities that are enabled on the neighbor. |
| `Management Addresses` | List of neighbor's management addresses. |
| `Port VLAN ID (PVID)` | VLAN identifier associated with untagged or priority tagged frames for the neighbor port. |
| `Port & Protocol VLAN (Supported)` | Whether Port & Protocol VLAN is supported on the LLDP neighbor. |
| `Port & Protocol VLAN (Enabled)` | Whether Port & Protocol VLAN is enabled on the LLDP neighbor. |
| `Port & Protocol VLAN (VIDs)` | List of Port & Protocol VLAN identifiers. |
| `VLAN Names` | List of names of VLANs that the neighbor's port belongs to. |
| `Protocol IDs` | List of protocols that are accessible through the neighbor's port. |
| `MAC/PHY Auto-negotiation` | Auto-negotiation configuration and status |
| `Power Via MDI (PoE)` | PoE configuration and status of 802.3 Power-Via-MDI TLV |
| `Link Aggregation` | Link aggregation information |

**Table 60:** Parameters in the output of the **show lldp neighbors detail** command (cont.)

| Parameter | Description |
|---|---|
| `Maximum Frame Size` | The maximum frame size capability |
| `LLDP-MED Device Type` | LLDP-MED Device type |
| `LLDP-MED Capabilities` | LLDP-MED capabilities supported |
| `Network Policy` | List of network policies |
| `Location Identification` | Location information |
| `Extended Power Via MDI (PoE)` | PoE-capability and current status |
| `Inventory Management` | Inventory information |

**Related commands** show lldp neighbors

# show lldp statistics

**Overview** This command displays the global LLDP statistics (packet and event counters).

**Syntax**

```
show lldp statistics
```

**Mode** User Exec and Privileged Exec

**Example** To display global LLDP statistics information, use the command:

```
awplus# show lldp statistics
```

**Output**

**Table 61:** Example output from the **show lldp statistics** command

```
awplus# show lldp statistics

Global LLDP Packet and Event counters:

  Frames:    Out ................... 345
             In .................... 423
             In Errored ............ 0
             In Dropped ............ 0
  TLVs:      Unrecognized .......... 0
             Discarded ............. 0
  Neighbors: New Entries ........... 20
             Deleted Entries ....... 20
             Dropped Entries ....... 0
             Entry Age-outs ........ 20
```

**Table 62:** Parameters in the output of the **show lldp statistics** command

| Parameter | Description |
|---|---|
| Frames Out | Number of LLDPDU frames transmitted. |
| Frames In | Number of LLDPDU frames received. |
| Frames In Errored | Number of invalid LLDPDU frames received. |
| Frames In Dropped | Number of LLDPDU frames received and discarded for any reason. |
| TLVs Unrecognized | Number of LLDP TLVs received that are not recognized but the TLV type is in the range of reserved TLV types. |
| TLVs Discarded | Number of LLDP TLVs discarded for any reason. |
| Neighbors New Entries | Number of times the information advertised by neighbors has been inserted into the neighbor table. |

**Table 62:** Parameters in the output of the **show lldp statistics** command (cont.)

| Parameter | Description |
|---|---|
| `Neighbors Deleted Entries` | Number of times the information advertised by neighbors has been removed from the neighbor table. |
| `Neighbors Dropped Entries` | Number of times the information advertised by neighbors could not be entered into the neighbor table because of insufficient resources. |
| `Neighbors Entry Age-outs Entries` | Number of times the information advertised by neighbors has been removed from the neighbor table because the information TTL interval has expired. |

**Related commands**

clear lldp statistics

show lldp statistics interface

# show lldp statistics interface

**Overview** This command displays the LLDP statistics (packet and event counters) for specified ports. If no port list is supplied, LLDP statistics for all ports are displayed.

**Syntax**

```
show lldp statistics interface [<port-list>]
```

| Parameter | Description |
|---|---|
| *<port-list>* | The ports for which the statistics are to be shown. |

**Mode** User Exec and Privileged Exec

**Examples** To display LLDP statistics information for all ports, use the command:

```
awplus# show lldp statistics interface
```

**Output**

**Table 63:** Example output from the **show lldp statistics interface** command

| |
|---|

**Table 64:** Parameters in the output of the **show lldp statistics interface** command

| Parameter | Description |
|---|---|
| `Frames Out` | Number of LLDPDU frames transmitted. |
| `Frames In` | Number of LLDPDU frames received. |
| `Frames In Errored` | Number of invalid LLDPDU frames received. |
| `Frames In Dropped` | Number of LLDPDU frames received and discarded for any reason. |
| `TLVs Unrecognized` | Number of LLDP TLVs received that are not recognized but the TLV type is in the range of reserved TLV types. |
| `TLVs Discarded` | Number of LLDP TLVs discarded for any reason. |
| `Neighbors New Entries` | Number of times the information advertised by neighbors has been inserted into the neighbor table. |
| `Neighbors Deleted Entries` | Number of times the information advertised by neighbors has been removed from the neighbor table. |

**Table 64:** Parameters in the output of the **show lldp statistics interface** command (cont.)

| Parameter | Description |
|---|---|
| `Neighbors Dropped Entries` | Number of times the information advertised by neighbors could not be entered into the neighbor table because of insufficient resources. |
| `Neighbors Entry Age-outs Entries` | Number of times the information advertised by neighbors has been removed from the neighbor table because the information TTL interval has expired. |

**Related commands**

clear lldp statistics

show lldp statistics

# show location

**Overview** Use this command to display selected location information configured on the switch.

**Syntax**

```
show location {civic-location|coord-location|elin-location}
show location {civic-location|coord-location|elin-location}
identifier {<civic-loc-id>|<coord-loc-id>|<elin-loc-id>}
show location {civic-location|coord-location|elin-location}
interface <port-list>
```

| Parameter | Description |
|---|---|
| `civic-location` | Display civic location information. |
| `coord-location` | Display coordinate location information. |
| `elin-location` | Display ELIN (Emergency Location Identifier Number) information. |
| `<civic-loc-id>` | Civic address location identifier, in the range 1 to 4095. |
| `<coord-loc-id>` | Coordinate location identifier, in the range 1 to 4095. |
| `<elin-loc-id>` | ELIN location identifier, in the range 1 to 4095. |
| `<port-list>` | Ports to display information about. |

**Mode** User Exec and Privileged Exec

**Examples** To display a civic address location configured on port1.0.1, use the command:

```
awplus# show location civic-location interface port1.0.1
```

**Table 65:** Example output from the **show location** command

```
awplus# show location civic-location interface port1.0.1
Port     ID   Element Type          Element Value
-----------------------------------------------------------------
1.0.1    1    Country               NZ
              City                  Christchurch
              Street-suffix         Avenue
              House-number          27
              Primary-road-name     Nazareth
```

To display coordinate location information configured on the identifier 1, use the command:

```
awplus# show location coord-location identifier 1
```

**Table 66:** Example output from the **show location** command

```
awplus# show location coord-location identifier 1
  ID  Element Type             Element Value
-------------------------------------------------------------------
  1   Latitude Resolution      15 bits
      Latitude                 38.898648113012313842773437 5 degrees
      Longitude Resolution     15 bits
      Longitude                130.23232322931289672851562 50 degrees
      Altitude Resolution      10 bits
      Altitude                 2.50000000 meters
      Map Datum                WGS 84
```

The coordinate location information displayed may differ from the information entered because it is stored in binary format. For more information, see the location coord-location configuration command.

To display all ELIN location information configured on the switch, use the command:

```
awplus# show location elin-location
```

**Table 67:** Example output from the **show location elin-location** command

```
awplus# show location elin-location
  ID  ELIN
-----------------------------------
  1   1234567890
  2   5432154321
```

**Related commands**

location elin-location-id

location civic-location identifier

location civic-location configuration

location coord-location identifier

location coord-location configuration

location elin-location

**Command changes**

Version 5.4.8-2.1: Command added to AR2050V, AR3050S, AR4050S

# 59 Mail (SMTP) Commands

## Introduction

**Overview**

This chapter provides an alphabetical reference for commands used to configure mail. The mail feature uses Simple Mail Transfer Protocol (SMTP) to transfer mail from an internal email client operating within the AlliedWare Plus device. This feature is typically used to email event notifications to an external email server from the AlliedWare Plus device.

For information on using the mail feature, see the Mail (SMTP) Feature Overview and Configuration Guide.

**Command List**


- "debug mail" on page 3113
- "delete mail" on page 3114
- "mail" on page 3115
- "mail from" on page 3117
- "mail smtpserver" on page 3118
- "mail smtpserver authentication" on page 3119
- "mail smtpserver port" on page 3121
- "show counter mail" on page 3123
- "show mail" on page 3124
- "undebug mail" on page 3125

# debug mail

**Overview**

This command turns on debugging for sending emails.

The **no** variant of this command turns off debugging for sending emails.

**Syntax**

```
debug mail
no debug mail
```

**Mode**

Privileged Exec

**Examples**

To turn on debugging for sending emails, use the command:

```
awplus# debug mail
```

To turn off debugging for sending emails, use the command:

```
awplus# no debug mail
```

**Related commands**

delete mail

mail

mail from

mail smtpserver

show counter mail

show mail

undebug mail

# delete mail

**Overview** This command deletes mail from the queue.

You need the *mail-id* from the **show mail** command output to delete specific emails, or use the **all** parameter to clear all messages in the queue completely.

**Syntax**

```
delete mail [mail-id <mail-id>|all]
```

| Parameter | Description | |
|---|---|---|
| `mail-id` | Deletes a single mail from the mail queue. | |
| | *<mail-id>* | A unique mail ID number. Use the show mail command to display this for an item of mail. |
| `all` | Delete all the mail in the queue. | |

**Mode** Privileged Exec

**Examples** To delete the unique mail item "20060912142356.1234" from the queue, use the command:

```
awplus# delete mail 20060912142356.1234
```

To delete all mail from the queue, use the command:

```
awplus# delete mail all
```

**Related commands**

debug mail

mail

mail from

mail smtpserver

show mail

# mail

**Overview** This command sends an email using the SMTP protocol. If you specify a file the text inside the file is sent in the message body.

If you do not specify the **to**, **file**, or **subject** parameters, the CLI prompts you for the missing information.

Before you can send mail using this command, you must specify the sending email address using the mail from command and a mail server using the mail smtpserver command.

**Syntax**

```
mail [to <to>] [subject <subject>] [file <filename>]
```

| Parameter | Description | |
|---|---|---|
| `to` | The email recipient. | |
| | *<to>* | Email address. |
| `subject` | Description of the subject of this email. Use quote marks when the subject text contains spaces. | |
| | *<subject>* | String. |
| `file` | File to insert as text into the message body. | |
| | *<filename>* | String. |

**Mode** Privileged Exec

**Usage notes** When you use the **mail** command you can use parameter substitutions in the subject field. The following table lists the parameters that can be substituted and their descriptions:

| Parameter | Description |
|---|---|
| *<%N>* | When this parameter is specified, the %N is replaced by the host name of your device. |
| *<%S>* | When this parameter is specified, the %S is replaced by the serial number of your device. |
| *<%D>*<br>*<%L>*<br>*<%T>* | When any of these parameters is specified, they are replaced by the current date and time (local time) on your device. |
| *<%U>* | When this parameter is specified, the %U is replaced by the current date and time (UTC time) on your device. |

***NOTE:*** *If no local time is configured, it will use UTC.*

**Examples**

To send an email to “admin@example.com” with the subject “test email” and with the message body inserted from the file “test.conf”, use the command:

```
awplus# mail to admin@example.com subject "test email" filename
test.conf
```

To send an email using parameter substitutions for the host name, serial number and date, use the commands:

```
awplus# mail to admin@example.com subject "Sending email from
Hostname:%N Serial Number:%S Date:%T"
```

**Related commands**

debug mail

delete mail

mail from

mail smtpserver

mail smtpserver authentication

mail smtpserver port

show counter mail

show mail

# mail from

**Overview**

This command sets an email address as the sender. You must specify a sending email address with this command before you can send email.

Use the **no** variant of this command to remove the "mail from" address.

**Syntax**

```
mail from <from>
no mail from
```

| Parameter | Description |
|---|---|
| *<from>* | The email address that the mail is sent from (also known as the hostname). |

**Mode**

Global Configuration

**Example**

To set up your email address as the sender "kaji@nerv.com", use the command:

```
awplus(config)# mail from kaji@nerv.com
```

**Related commands**

debug mail

delete mail

mail

mail smtpserver

show counter mail

show mail

undebug mail

# mail smtpserver

**Overview**

This command specifies the IP address or domain name of the SMTP server that your device sends email to. You must specify a mail server with this command before you can send email.

Use the **no** variant of this command to remove the configured mail server.

**Syntax**

```
mail smtpserver {<ip-address>|<name>}
no mail smtpserver
```

| Parameter | Description |
|---|---|
| *<ip-address>* | Internet Protocol (IP) address for the mail server. |
| *<name>* | Domain name (FQDN) for the mail server (also known as the host name). |

**Mode**

Global Configuration

**Usage notes**

If you specify the server by specifying its domain name, you must also ensure that the DNS client on your device is enabled. It is enabled by default but if it has been disabled, you can re-enable it by using the ip domain-lookup command.

**Examples**

To specify a mail server at "192.168.0.1", use the command:

```
awplus(config)# mail smtpserver 192.168.0.1
```

To specify a mail server that has a host name of "smtp.example.com", use the command:

```
awplus(config)# mail smtpserver smtp.example.com
```

To remove the configured mail server, use the command:

```
awplus(config)# no mail smtpserver
```

**Related commands**

debug mail

delete mail

mail

mail from

show counter mail

show mail

# mail smtpserver authentication

**Overview** Use this command to configure SMTP mail server authentication.

Use the **no** variant of this command to remove the configured SMTP mail server authentication.

**Syntax**

```
mail smtpserver authentication {crammd5|login|plain} username
<username> password [8] <password>
```

```
no mail smtpserver authentication
```

| Parameter | Description |
|---|---|
| `crammd5` | This is a Challenge Request Authentication Mechanism based on the HMAC-MD5 mechanism and is the most secure option. |
| `login` | A BASE64 encryption method |
| `plain` | A BASE64 encryption method |
| *<username>* | Registered user name |
| 8 | The registered user password is presented in an already encrypted format. This is how the running configuration stores the plain text password and is not for general use. |
| *<password>* | Registered user password |

**Default** No authentication option is set by default.

**Mode** Global Configuration

**Usage notes** You cannot change the IP address or Domain Name of the SMTP server if authentication is configured. If you attempt to change it when authentication is configured, the following error message is displayed:

```
% Error: authentication configuration still exists
```

**Examples** To configure the SMTP mail server authentication to crammd5, use the commands:

```
awplus# configure terminal
awplus(config)# mail smtpserver authentication crammd5 username
admin password unguessablePassword
```

To remove SMTP mail server authentication, use the commands:

```
awplus# configure terminal
awplus(config)# no mail smtpserver authentication
```

**Output** Figure 59-1: Example output from **show mail**:

```
awplus#show mail
Mail Settings
-------------------------------------------------------------
State                                : Alive
SMTP Server                          : 1.2.3.4
Host Name                            : admin@example.com
Authentication                       : crammd5
Username                             : admin
Debug                                : Disabled

awplus#show running-config
!
mail smtpserver authentication plain username admin password 8
aF0a9pkjbmXGfl6TlSk/GakeIK5tMYN6LqMYT8Ia2qw=
!
```

**Related commands**

debug mail

delete mail

mail

mail from

mail smtpserver

mail smtpserver port

show counter mail

show mail

**Command changes** Version 5.4.8-1.1: command added

# mail smtpserver port

**Overview** Use this command to configure the SMTP mail client/server communication port.

Use the **no** variant of this command to remove the configured port and set it back to the default port 25.

**Syntax**

```
mail smtpserver port <port>
no mail smtpserver port
```

| Parameter | Description |
|---|---|
| *<port>* | Port number from the range 1 to 65535 |

**Default** Port 25 is the default port.

**Mode** Global Configuration

**Examples** To configure the mail server communication over port 587, use the commands:

```
awplus# configure terminal
awplus(config)# mail smtpserver port 587
```

To remove the configured port and set it back to the default port 25, use the commands:

```
awplus# configure terminal
awplus(config)# no mail smtpserver port
```

**Output** Figure 59-2: Example output from **show mail**:

```
awplus#show mail
Mail Settings
-------------------------------------------------------------
State                                : Alive
SMTP Server                          : 10.24.165.4
Host Name                            : admin@example.com
Authentication                       : plain
Username                             : admin
Port                                 : 587
Debug                                : Disabled

awplus#show running-config
!
mail smtpserver port 587
!
```

**Related commands**

debug mail

delete mail

mail

mail from

mail smtpserver

mail smtpserver authentication

show counter mail

show mail

**Command changes**

Version 5.4.8-1.1: command added

# show counter mail

**Overview** This command displays the mail counters.

**Syntax** `show counter mail`

**Mode** User Exec and Privileged Exec

**Example** To show the emails in the queue use the command:

```
awplus# show counter mail
```

**Output** Figure 59-3: Example output from the **show counter mail** command

```
Mail Client (SMTP) counters
Mails Sent            ......... 2
Mails Sent Fails      ......... 1
```

**Table 1:** Parameters in the output of the **show counter mail** command

| Parameter | Description |
|---|---|
| `Mails Sent` | The number of emails sent successfully since the last device restart. |
| `Mails Sent Fails` | The number of emails the device failed to send since the last device restart. |

**Related commands**

debug mail

delete mail

mail

mail from

show mail

# show mail

**Overview** This command displays the emails in the queue.

**Syntax** `show mail`

**Mode** Privileged Exec

**Example** To display the emails in the queue use the command:

```
awplus# show mail
```

**Output** Figure 59-4: Example output from the **show mail** command:

```
awplus#show mail
Mail Settings
-------------------------------------------------------------
State                                : Alive
SMTP Server                          : example.net
Host Name                            : test@example.com
Debug                                : Enabled

Messages
-------------------------------------------------------------
To                                   : rei@nerv.com
Subject                              : The WAN is down
Message-ID                           : 20180615121150.8663

To                                   : rei@nerv.com
Subject                              : WAN is not connecting in lab
Message-ID                           : 20180614142502.19308

To                                   : rei@nerv.com
Subject                              : The LAN is not functioning
Message-ID                           : 20180614141911.29709
```

**Related commands**

delete mail

mail

mail from

mail smtpserver

show counter mail

undebug mail

# undebug mail

**Overview** This command applies the functionality of the no debug mail command.

# 60 Secure Shell (SSH) Commands

## Introduction

**Overview** This chapter provides an alphabetical reference for commands used to configure Secure Shell (SSH). For more information, see the SSH Feature Overview and Configuration Guide.

**Command List**


- "banner login (SSH)" on page 3128
- "clear ssh" on page 3129
- "crypto key destroy hostkey" on page 3130
- "crypto key destroy userkey" on page 3131
- "crypto key generate hostkey" on page 3132
- "crypto key generate userkey" on page 3134
- "crypto key pubkey-chain knownhosts" on page 3135
- "crypto key pubkey-chain userkey" on page 3137
- "debug ssh client" on page 3139
- "debug ssh server" on page 3140
- "service ssh" on page 3141
- "show banner login" on page 3143
- "show crypto key hostkey" on page 3144
- "show crypto key pubkey-chain knownhosts" on page 3146
- "show crypto key pubkey-chain userkey" on page 3148
- "show crypto key userkey" on page 3149
- "show running-config ssh" on page 3150
- "show ssh" on page 3152
- "show ssh client" on page 3154

- "show ssh server" on page 3155
- "show ssh server allow-users" on page 3157
- "show ssh server deny-users" on page 3158
- "ssh" on page 3159
- "ssh client" on page 3161
- "ssh server" on page 3163
- "ssh server allow-users" on page 3165
- "ssh server authentication" on page 3167
- "ssh server deny-users" on page 3169
- "ssh server max-auth-tries" on page 3171
- "ssh server resolve-host" on page 3172
- "ssh server scp" on page 3173
- "ssh server secure-ciphers" on page 3174
- "ssh server sftp" on page 3175
- "undebug ssh client" on page 3176
- "undebug ssh server" on page 3177

# banner login (SSH)

**Overview**

This command configures a login banner on the SSH server. This displays a message on the remote terminal of the SSH client before the login prompt. SSH client version 1 does not support this banner.

To add a banner, first enter the command **banner login**, and hit [Enter]. Write your message. You can use any character and spaces. Use Ctrl+D at the end of your message to save the text and re-enter the normal command line mode.

The banner message is preserved if the device restarts.

The **no** variant of this command deletes the login banner from the device.

**Syntax**

```
banner login
no banner login
```

**Default**

No banner is defined by default.

**Mode**

Global Configuration

**Examples**

To set a login banner message, use the commands:

```
awplus# configure terminal
awplus(config)# banner login
```

The screen will prompt you to enter the message:

```
Type CNTL/D to finish.
... banner message comes here ...
```

Enter the message. Use Ctrl+D to finish, like this:

```
^D
awplus(config)#
```

To remove the login banner message, use the commands:

```
awplus# configure terminal
awplus(config)# no banner login
```

**Related commands**

show banner login

# clear ssh

**Overview** This command deletes Secure Shell sessions currently active on the device. This includes both incoming and outgoing sessions. The deleted sessions are closed. You can only delete an SSH session if you are a system manager or the user who initiated the session. If **all** is specified then all active SSH sessions are deleted.

**Syntax**

```
clear ssh {<1-65535>|all}
```

| Parameters | Description |
|---|---|
| *<1-65535>* | Specify a session ID in the range 1 to 65535 to delete a specific session. |
| `all` | Delete all SSH sessions. |

**Mode** Privileged Exec

**Examples** To stop the current SSH session 123, use the command:

```
awplus# clear ssh 123
```

To stop all SSH sessions active on the device, use the command:

```
awplus# clear ssh all
```

**Related commands** service ssh

ssh

# crypto key destroy hostkey

**Overview** This command deletes the existing public and private keys of the SSH server.

When you enable the SSH server, the server automatically generates an SSHv2 host key pair (public and private keys), using RSA with 1024-bit key generation. If you need a key with different parameters than this, you can use the crypto key generate hostkey command to generate that key before you enable the SSH server.

**Syntax**

```
crypto key destroy hostkey {dsa|ecdsa|rsa|rsa1}
```

| Parameters | Description |
|---|---|
| dsa | Deletes the existing DSA public and private keys. |
| ecdsa | Deletes the existing ECDSA public and private keys. |
| rsa | Deletes the existing RSA public and private keys configured for SSH version 2 connections. |
| rsa1 | Deletes the existing RSA public and private keys configured for SSH version 1 connections. |

**Mode** Global Configuration

**Example** To destroy the RSA host key used for SSH version 2 connections, use the commands:

```
awplus# configure terminal
awplus(config)# crypto key destroy hostkey rsa
```

**Related commands**

crypto key generate hostkey

service ssh

# crypto key destroy userkey

**Overview** This command destroys the existing public and private keys of an SSH user configured on the device.

**Syntax**

```
crypto key destroy userkey <username> {dsa|rsa|rsa1}
```

| Parameters | Description |
|---|---|
| *<username>* | Name of the user whose userkey you are destroying. The username must begin with a letter. Valid characters are all numbers, letters, and the underscore, hyphen and full stop symbols. |
| dsa | Deletes the existing DSA userkey. |
| rsa | Deletes the existing RSA userkey configured for SSH version 2 connections. |
| rsa1 | Deletes the existing RSA userkey for SSH version 1 connections. |

**Mode** Global Configuration

**Example** To destroy the RSA user key for the SSH user `remoteuser`, use the commands:

```
awplus# configure terminal
awplus(config)# crypto key destroy userkey remoteuser rsa
```

**Related commands**

crypto key generate hostkey

show ssh

show crypto key hostkey

# crypto key generate hostkey

**Overview**

This command generates public and private keys for the SSH server.

When you enable the SSH server, the server automatically generates an SSHv2 host key pair (public and private keys), using RSA with 1024-bit key generation.

If you need a key with different parameters than this, you can use this command to generate that key before you enable the SSH server. If a host key exists with the same cryptography algorithm, this command replaces the old host key with the new key.

This command is not saved in the device configuration. However, the device saves the keys generated by this command in the non-volatile memory.

**Syntax**

```
crypto key generate hostkey {dsa} [<768-1024>]
crypto key generate hostkey {rsa|rsa1} [<768-32768>]
crypto key generate hostkey {ecdsa} [<256|384>]
```

| Parameters | Description |
|---|---|
| dsa | Creates a DSA hostkey. Both SSH version 1 and 2 connections can use the DSA hostkey. |
| rsa | Creates an RSA hostkey for SSH version 2 connections. |
| rsa1 | Creates an RSA hostkey for SSH version 1 connections. |
| ecdsa | Creates an ECDSA hostkey. Both SSH version 1 and 2 connections can use the ECDSA hostkey. |
| *<768-32768>* | The length in bits of the generated key. The default is 1024 bits. |
| *<256\|384>* | The ECDSA key size in bits. The default is 256, but it can be set to 384. |

**Default**

The default key length for RSA and DSA is 1024 bits.

The default key size for ECDSA is 256 bits.

**Mode**

Global Configuration

**Examples**

To generate an RSA host key for SSH version 2 connections that is 2048 bits in length, use the commands:

```
awplus# configure terminal
awplus(config)# crypto key generate hostkey rsa 2048
```

To generate a DSA host key, use the commands:

```
awplus# configure terminal
awplus(config)# crypto key generate dsa
```

To generate an ECDSA host key with an elliptic curve size of 384 bits, use the commands:

```
awplus# configure terminal
awplus(config)# crypto key generate ecdsa 384
```

**Related commands**

crypto key destroy hostkey

service ssh

show crypto key hostkey

# crypto key generate userkey

**Overview**

This command generates public and private keys for an SSH user using either an RSA or DSA cryptography algorithm. To use public key authentication, copy the public key of the user onto the remote SSH server.

This command is not saved in the device configuration. However, the device saves the keys generated by this command in the non-volatile memory.

**Syntax**

```
crypto key generate userkey <username> {dsa} [<768-1024>]
crypto key generate userkey <username> {rsa|rsa1} [<768-32768>]
crypto key generate userkey <username> {ecdsa} [<256|384>]
```

| Parameters | Description |
|---|---|
| *<username>* | Name of the user that the user key is generated for. The username must begin with a letter. Valid characters are all numbers, letters, and the underscore, hyphen and full stop symbols. |
| dsa | Creates a DSA userkey. Both SSH version 1 and 2 connections can use a key created with this command. |
| rsa | Creates an RSA userkey for SSH version 2 connections. |
| rsa1 | Creates an RSA userkey for SSH version 1 connections. |
| ecdsa | Creates an ECDSA hostkey. Both SSH version 1 and 2 connections can use the ECDSA hostkey. |
| *<768-32768>* | The length in bits of the generated key. The default is 1024 bits. |
| *<256\|384>* | The ECDSA key size in bits. The default is 256, but it can be set to 384. |

**Mode**

Global Configuration

**Examples**

To generate a 2048-bits RSA user key for SSH version 2 connections for the user “bob”, use the commands:

```
awplus# configure terminal
awplus(config)# crypto key generate userkey bob rsa 2048
```

To generate a DSA user key for the user “lapo”, use the commands:

```
awplus# configure terminal
awplus(config)# crypto key generate userkey lapo dsa
```

**Related commands**

crypto key pubkey-chain userkey

show crypto key userkey

# crypto key pubkey-chain knownhosts

**Overview**

This command adds a public key of the specified SSH server to the known host database on your device. The SSH client on your device uses this public key to verify the remote SSH server.

The key is retrieved from the server. Before adding a key to this database, check that the key sent to you is correct.

If the server's key changes, or if your SSH client does not have the public key of the remote SSH server, then your SSH client will inform you that the public key of the server is unknown or altered.

The **no** variant of this command deletes the public key of the specified SSH server from the known host database on your device.

**Syntax**

```
crypto key pubkey-chain knownhosts [ip|ipv6] <hostname>
[rsa|dsa|rsa1]
```

```
no crypto key pubkey-chain knownhosts <1-65535>
```

**Syntax (VRF-lite)**

```
crypto key pubkey-chain knownhosts [vrf <vrf-name>]
[ip|ipv6] <hostname> [rsa|dsa|rsa1]
```

```
no crypto key pubkey-chain knownhosts [vrf <vrf-name>]
<1-65535>
```

| Parameter | Description |
|---|---|
| `vrf` | Apply this command to the specified VRF instance. |
| *<vrf-name>* | The VRF instance name |
| `ip` | Keyword used prior to specifying an IPv4 address |
| `ipv6` | Keyword used prior to specifying an IPv6 address |
| *<hostname>* | IPv4/IPv6 address or hostname of a remote server in the format `a.b.c.d` for an IPv4 address, or in the format `x:x::x:x` for an IPv6 address. |
| `rsa` | Specify the RSA public key of the server to be added to the known host database. |
| `dsa` | Specify the DSA public key of the server to be added to the known host database. |
| `rsa1` | Specify the SSHv1 public key of the server to be added to the know host database. |
| *<1-65535>* | Specify a key identifier when removing a key using the **no** parameter. |

**Default**

If no cryptography algorithm is specified, then **rsa** is used as the default cryptography algorithm.

**Mode**

Privilege Exec

**Usage notes**

This command adds a public key of the specified SSH server to the known host database on the device. The key is retrieved from the server. The remote SSH server is verified by using this public key. The user is requested to check the key is correct before adding it to the database.

If the remote server's host key is changed, or if the device does not have the public key of the remote server, then SSH clients will inform the user that the public key of the server is altered or unknown.

**Examples**

To add the RSA host key of the remote SSH host IPv4 address `192.0.2.11` to the known host database, use the command:

```
awplus# crypto key pubkey-chain knownhosts 192.0.2.11
```

To delete the second entry in the known host database, use the command:

```
awplus# no crypto key pubkey-chain knownhosts 2
```

**Examples (VRF-lite)**

To add the RSA host key of the remote SSH host IPv4 address `192.0.2.11` in VRF `red` to the known host database, use the command:

```
awplus# crypto key pubkey-chain knownhosts vrf red 192.0.2.11
```

To delete the second entry in the known host database in VRF `red`, use the command:

```
awplus# no crypto key pubkey-chain knownhosts vrf red 2
```

**Validation Commands**

show crypto key pubkey-chain knownhosts

**Command changes**

Version 5.4.6-2.1: VRF-lite support added.

# crypto key pubkey-chain userkey

**Overview**

This command adds a public key for an SSH user on the SSH server. This allows the SSH server to support public key authentication for the SSH user. When configured, the SSH user can access the SSH server without providing a password from the remote host.

The **no** variant of this command removes a public key for the specified SSH user that has been added to the public key chain. When a SSH user's public key is removed, the SSH user can no longer login using public key authentication.

**Syntax**

```
crypto key pubkey-chain userkey <username> [<filename>]
no crypto key pubkey-chain userkey <username> <1-65535>
```

| Parameters | Description |
|---|---|
| *<username>* | Name of the user that the SSH server associates the key with. The username must begin with a letter. Valid characters are all numbers, letters, and the underscore, hyphen and full stop symbols.<br>Default: no default |
| *<filename>* | Filename of a key saved in flash. Valid characters are any printable character. You can add a key as a hexadecimal string directly into the terminal if you do not specify a filename. |
| *<1-65535>* | The key ID number of the user's key. Specify the key ID to delete a key. |

**Mode**

Global Configuration

**Usage notes**

You should import the public key file from the client node. The device can read the data from a file on the flash or user terminal.

Or you can add a key as text into the terminal. To add a key as text into the terminal, first enter the command **crypto key pubkey-chain userkey** <*username*>, and hit [Enter]. Enter the key as text. Note that the key you enter as text must be a valid SSH RSA key, not random ASCII text. Use [Ctrl]+D after entering it to save the text and re-enter the normal command line mode.

Note you can generate a valid SSH RSA key on the device first using the **crypto key generate host rsa** command. View the SSH RSA key generated on the device using the **show crypto hostkey rsa** command. Copy and paste the displayed SSH RSA key after entering the **crypto key pubkey-chain userkey** <*username*> command. Use [Ctrl]+D after entering it to save it.

**Examples**

To generate a valid SSH RSA key on the device and add the key, use the following commands:

```
awplus# configure terminal
awplus(config)# crypto key generate host rsa
awplus(config)# exit
awplus# show crypto key hostkey
rsaAAAAB3NzaC1yc2EAAAABIwAAAIEAr1s7SokW5aW2fcOw1TStpb9J20bWluh
nUC768EoWhyPW6FZ2t5360O5M29EpKBmGqlkQaz5V0mU9IQe66+5YyD4UxOKSD
tTI+7jtjDcoGWHb2u4sFwRpXwJZcgYrXW16+6NvNbk+h+c/pqGDijj4SvfZZfe
ITzvvyZW4/I4pbN8=
awplus# configure terminal
awplus(config)# crypto key pubkey-chain userkey joeType CNTL/D
to
finish:AAAAB3NzaC1yc2EAAAABIwAAAIEAr1s7SokW5aW2fcOw1TStpb9J20b
WluhnUC768EoWhyPW6FZ2t5360O5M29EpKBmGqlkQaz5V0mU9IQe66+5YyD4Ux
OKSDtTI+7jtjDcoGWHb2u4sFwRpXwJZcgYrXW16+6NvNbk+h+c/pqGDijj4Svf
ZZfeITzvvyZW4/I4pbN8=control-D
awplus(config)#
```

To add a public key for the user `graydon` from the file `key.pub`, use the commands:

```
awplus# configure terminal
awplus(config)# crypto key pubkey-chain userkey graydon key.pub
```

To add a public key for the user `tamara` from the terminal, use the commands:

```
awplus# configure terminal
awplus(config)# crypto key pubkey-chain userkey tamara
```

and enter the key. Use Ctrl+D to finish.

To remove the first key entry from the public key chain of the user `john`, use the commands:

```
awplus# configure terminal
awplus(config)# no crypto key pubkey-chain userkey john 1
```

**Related commands**

show crypto key pubkey-chain userkey

# debug ssh client

**Overview**

This command enables the SSH client debugging facility. When enabled, any SSH, SCP and SFTP client sessions send diagnostic messages to the login terminal.

The **no** variant of this command disables the SSH client debugging facility. This stops the SSH client from generating diagnostic debugging message.

**Syntax**

```
debug ssh client [brief|full]
no debug ssh client
```

| Parameter | Description |
|---|---|
| `brief` | Enables brief debug mode. |
| `full` | Enables full debug mode. |

**Default**

SSH client debugging is disabled by default.

**Mode**

Privileged Exec and Global Configuration

**Examples**

To start SSH client debugging, use the command:

```
awplus# debug ssh client
```

To start SSH client debugging with extended output, use the command:

```
awplus# debug ssh client full
```

To disable SSH client debugging, use the command:

```
awplus# no debug ssh client
```

**Related commands**

debug ssh server

show ssh client

undebug ssh client

# debug ssh server

**Overview**

This command enables the SSH server debugging facility. When enabled, the SSH server sends diagnostic messages to the system log. To display the debugging messages on the terminal, use the **terminal monitor** command.

The **no** variant of this command disables the SSH server debugging facility. This stops the SSH server from generating diagnostic debugging messages.

**Syntax**

```
debug ssh server [brief|full]
no debug ssh server
```

| Parameter | Description |
|---|---|
| `brief` | Enables brief debug mode. |
| `full` | Enables full debug mode. |

**Default**

SSH server debugging is disabled by default.

**Mode**

Privileged Exec and Global Configuration

**Examples**

To start SSH server debugging, use the command:

```
awplus# debug ssh server
```

To start SSH server debugging with extended output, use the command:

```
awplus# debug ssh server full
```

To disable SSH server debugging, use the command:

```
awplus# no debug ssh server
```

**Related commands**

debug ssh client

show ssh server

undebug ssh server

# service ssh

**Overview** Use this command to enable the Secure Shell server on the device. Once enabled, connections coming from SSH clients are accepted.

When you enable the SSH server, the server automatically generates an SSHv2 host key pair (public and private keys), using RSA with 1024-bit key generation. If you need a key with different parameters than this, you can use the crypto key generate hostkey command to generate that key before you enable the SSH server.

Use the **no** variant of this command disables the Secure Shell server. When the Secure Shell server is disabled, connections from SSH, SCP, and SFTP clients are not accepted. This command does not affect existing SSH sessions. To terminate existing sessions, use the clear ssh command.

**Syntax**

```
service ssh [ip|ipv6]
no service ssh [ip|ipv6]
```

**Default** The Secure Shell server is disabled by default. Both IPv4 and IPv6 Secure Shell server are enabled when you issue **service ssh** without specifying the optional **ip** or **ipv6** parameters.

**Mode** Global Configuration

**Examples** To enable both the IPv4 and the IPv6 Secure Shell server, use the commands:

```
awplus# configure terminal
awplus(config)# service ssh
```

To enable the IPv4 Secure Shell server only, use the commands:

```
awplus# configure terminal
awplus(config)# service ssh ip
```

To enable the IPv6 Secure Shell server only, use the commands:

```
awplus# configure terminal
awplus(config)# service ssh ipv6
```

To disable both the IPv4 and the IPv6 Secure Shell server, use the commands:

```
awplus# configure terminal
awplus(config)# no service ssh
```

To disable the IPv4 Secure Shell server only, use the commands:

```
awplus# configure terminal
awplus(config)# no service ssh ip
```

To disable the IPv6 Secure Shell server only, use the commands:

```
awplus# configure terminal
awplus(config)# no service ssh ipv6
```

**Related commands**

crypto key generate hostkey

show running-config ssh

show ssh server

ssh server allow-users

ssh server deny-users

# show banner login

**Overview** This command displays the banner message configured on the device. The banner message is displayed to the remote user before user authentication starts.

**Syntax**

```
show banner login
```

**Mode** User Exec, Privileged Exec, Global Configuration, Interface Configuration, Line Configuration

**Example** To display the current login banner message, use the command:

```
awplus# show banner login
```

**Related commands** banner login (SSH)

# show crypto key hostkey

**Overview** This command displays the public keys generated on the device for the SSH server.

When you enable the SSH server, the server automatically generates an SSHv2 host key pair (public and private keys), using RSA with 1024-bit key generation. If you need a key with different parameters than this, you can use the crypto key generate hostkey command to generate that key before you enable the SSH server.

The private key remains on the device secretly. The public key is copied to SSH clients to identify the server. This command displays the public key.

**Syntax**

```
show crypto key hostkey [dsa|ecdsa|rsa|rsa1]
```

| Parameter | Description |
|---|---|
| dsa | Displays the DSA algorithm public key. Both SSH version 1 and 2 connections can use the DSA hostkey |
| ecdsa | Displays the ECDSA algorithm public key. Both SSH version 1 and 2 connections can use the ECDSA hostkey. |
| rsa | Displays the RSA algorithm public key for SSH version 2 connections. |
| rsa1 | Displays the RSA algorithm public key for SSH version 1 connections. |

**Mode** User Exec, Privileged Exec and Global Configuration

**Examples** To show the public keys generated on the device for SSH server, use the command:

```
awplus# show crypto key hostkey
```

To display the RSA public key of the SSH server, use the command:

```
awplus# show crypto key hostkey rsa
```

**Output** Figure 60-1: Example output from the **show crypto key hostkey** command

```
Type Bits   Fingerprint
-----------------------------------------------------------
rsa  2058   4e:7d:1d:00:75:79:c5:cb:c8:58:2e:f9:29:9c:1f:48
dsa  1024   fa:72:3d:78:35:14:cb:9a:1d:ca:1c:83:2c:7d:08:43
rsa1 1024   e2:1c:c8:8b:d8:6e:19:c8:f4:ec:00:a2:71:4e:85:8b
```

**Table 1:** Parameters in output of the **show crypto key hostkey** command

| Parameter | Description |
|---|---|
| `Type` | Algorithm used to generate the key. |
| `Bits` | Length in bits of the key. |
| `Fingerprint` | Checksum value for the public key. |

**Related commands**

crypto key destroy hostkey

crypto key generate hostkey

# show crypto key pubkey-chain knownhosts

**Overview** This command displays the list of public keys maintained in the known host database on the device.

**Syntax**

```
show crypto key pubkey-chain knownhosts [<1-65535>]
```

**Syntax (VRF-lite)**

```
show crypto key pubkey-chain knownhosts [vrf <vrf-name>|global]
[<1-65535>]
```

| Parameter | Description |
|---|---|
| `global` | When VRF-lite is configured, apply the command to the global routing and forwarding table. |
| `vrf` | Apply the command to the specified VRF instance. |
| `<vrf-name>` | The name of the VRF instance. |
| `<1-65535>` | Key identifier for a specific key. Displays the public key of the entry if specified. |

**Default** Display all keys.

**Mode** User Exec, Privileged Exec and Global Configuration

**Usage** When VRF-lite is configured:

- If **vrf** is specified, this command displays the known host database from the specified VRF instance.
- If **global** is specified, this command displays the known host database from the global routing environment.
- If neither **vrf** nor **global** is specified, this command displays the known host database from the global routing environment and each configured VRF.

For more information about VRF, see the VRF Lite Feature Overview and Configuration Guide.

**Examples** To display public keys of known SSH servers, use the command:

```
awplus# show crypto key pubkey-chain knownhosts
```

To display the key data of the first entry in the known host data, use the command:

```
awplus# show crypto key pubkey-chain knownhosts 1
```

**Output** Figure 60-2: Example output from the **show crypto key public-chain knownhosts** command

```
No     Hostname         Type Fingerprint
-----------------------------------------------------------------------
1      172.16.23.1      rsa  c8:33:b1:fe:6f:d3:8c:81:4e:f7:2a:aa:a5:be:df:18
2      172.16.23.10     rsa  c4:79:86:65:ee:a0:1d:a5:6a:e8:fd:1d:d3:4e:37:bd
3      5ffe:1053:ac21:ff00:0101:bcdf:ffff:0001
                        rsa1 af:4e:b4:a2:26:24:6d:65:20:32:d9:6f:32:06:ba:57
```

**Table 2:** Parameters in the output of the **show crypto key public-chain knownhosts** command

| Parameter | Description |
|---|---|
| `No` | Number ID of the key. |
| `Hostname` | Host name of the known SSH server. |
| `Type` | The algorithm used to generate the key. |
| `Fingerprint` | Checksum value for the public key. |

**Related commands** crypto key pubkey-chain knownhosts

**Command changes** Version 5.4.6-2.1: VRF-lite support added.

# show crypto key pubkey-chain userkey

**Overview** This command displays the public keys registered with the SSH server for SSH users. These keys allow remote users to access the device using public key authentication. By using public key authentication, users can access the SSH server without providing password.

**Syntax**

```
show crypto key pubkey-chain userkey <username> [<1-65535>]
```

| Parameter | Description |
|---|---|
| *<username>* | User name of the remote SSH user whose keys you wish to display. The username must begin with a letter. Valid characters are all numbers, letters, and the underscore, hyphen and full stop symbols. |
| *<1-65535>* | Key identifier for a specific key. |

**Default** Display all keys.

**Mode** User Exec, Privileged Exec and Global Configuration

**Example** To display the public keys for the user `manager` that are registered with the SSH server, use the command:

```
awplus# show crypto key pubkey-chain userkey manager
```

**Output** Figure 60-3: Example output from the **show crypto key public-chain userkey** command

```
No Type Bits Fingerprint
----------------------------------------------------------------
1  dsa  1024 2b:cc:df:a8:f8:2e:8f:a4:a5:4f:32:ea:67:29:78:fd
2  rsa  2048 6a:ba:22:84:c1:26:42:57:2c:d7:85:c8:06:32:49:0e
```

**Table 3:** Parameters in the output of the **show crypto key userkey** command

| Parameter | Description |
|---|---|
| `No` | Number ID of the key. |
| `Type` | The algorithm used to generate the key. |
| `Bits` | Length in bits of the key. |
| `Fingerprint` | Checksum value for the key. |

**Related commands** crypto key pubkey-chain userkey

# show crypto key userkey

**Overview** This command displays the public keys created on this device for the specified SSH user.

**Syntax**

```
show crypto key userkey <username> [dsa|rsa|rsa1]
```

| Parameter | Description |
|---|---|
| *<username>* | User name of the local SSH user whose keys you wish to display. The username must begin with a letter. Valid characters are all numbers, letters, and the underscore, hyphen and full stop symbols. |
| dsa | Displays the DSA public key. |
| rsa | Displays the RSA public key used for SSH version 2 connections. |
| rsa1 | Displays the RSA key used for SSH version 1 connections. |

**Mode** User Exec, Privileged Exec and Global Configuration

**Examples** To show the public key generated for the user, use the command:

```
awplus# show crypto key userkey manager
```

To store the RSA public key generated for the user manager to the file “user.pub”, use the command:

```
awplus# show crypto key userkey manager rsa > manager-rsa.pub
```

**Output** Figure 60-4: Example output from the **show crypto key userkey** command

```
Type Bits   Fingerprint
------------------------------------------------------------
rsa  2048   e8:d6:1b:c0:f4:b6:e6:7d:02:2e:a9:d4:a1:ca:3b:11
rsa1 1024   12:25:60:95:64:08:8e:a1:8c:3c:45:1b:44:b9:33:9b
```

**Table 4:** Parameters in the output of the **show crypto key userkey** command

| Parameter | Description |
|---|---|
| Type | The algorithm used to generate the key. |
| Bits | Length in bits of the key. |
| Fingerprint | Checksum value for the key. |

**Related commands** crypto key generate userkey

# show running-config ssh

**Overview** This command displays the current running configuration of Secure Shell (SSH).

**Syntax** `show running-config ssh`

**Mode** Privileged Exec and Global Configuration

**Example** To display the current configuration of SSH, use the command:

```
awplus# show running-config ssh
```

**Output** Figure 60-5: Example output from the **show running-config ssh** command

```
!
ssh server session-timeout 600
ssh server login-timeout 30
ssh server allow-users manager 192.168.1.*
ssh server allow-users john
ssh server deny-user john*.a-company.com
ssh server
```

**Table 5:** Parameters in the output of the **show running-config ssh** command

| Parameter | Description |
|---|---|
| `ssh server` | SSH server is enabled. |
| `ssh server v2` | SSH server is enabled and only support SSHv2. |
| `ssh server<port>` | SSH server is enabled and listening on the specified TCP port. |
| `no ssh server scp` | SCP service is disabled. |
| `no ssh server sftp` | SFTP service is disabled. |
| `ssh server session-timeout` | Configure the server session timeout. |
| `ssh server login-timeout` | Configure the server login timeout. |
| `ssh server max-startups` | Configure the maximum number of concurrent sessions waiting authentication. |
| `no ssh server authentication password` | Password authentication is disabled. |
| `no ssh server authentication publickey` | Public key authentication is disabled. |

**Table 5:** Parameters in the output of the **show running-config ssh** command

| Parameter | Description |
|---|---|
| `ssh server allow-users` | Add the user (and hostname) to the allow list. |
| `ssh server deny-users` | Add the user (and hostname) to the deny list. |

**Related commands**

service ssh

show ssh server

# show ssh

**Overview** This command displays the active SSH sessions on the device, both incoming and outgoing.

**Syntax** `show ssh`

**Mode** User Exec, Privileged Exec and Global Configuration

**Example** To display the current SSH sessions on the device, use the command:

```
awplus# show ssh
```

**Output** Figure 60-6: Example output from the **show ssh** command

```
Secure Shell Sessions:
ID  Type Mode   Peer Host    Username   State       Filename
----------------------------------------------------------------
414 ssh  server 172.16.23.1  root       open
456 ssh  client 172.16.23.10 manager    user-auth
459 scp  client 172.16.23.12 root       download    example.awd
463 ssh  client 5ffe:33fe:5632:ffbb:bc35:ddee:0101:ac51
                             manager    user-auth
```

**Table 6:** Parameters in the output of the **show ssh** command

| Parameter | Description |
|---|---|
| ID | Unique identifier for each SSH session. |
| Type | Session type; either SSH, SCP, or SFTP. |
| Mode | Whether the device is acting as an SSH client (client) or SSH server (server) for the specified session. |
| Peer Host | The hostname or IP address of the remote server or client. |
| Username | Login user name of the server. |

**Table 6:** Parameters in the output of the **show ssh** command (cont.)

| Parameter | Description | |
|---|---|---|
| State | The current state of the SSH session. One of: | |
| | connecting | The device is looking for a remote server. |
| | connected | The device is connected to the remote server. |
| | accepted | The device has accepted a new session. |
| | host-auth | host-to-host authentication is in progress. |
| | user-auth | User authentication is in progress. |
| | authenticated | User authentication is complete. |
| | open | The session is in progress. |
| | download | The user is downloading a file from the device. |
| | upload | The user is uploading a file from the device. |
| | closing | The user is terminating the session. |
| | closed | The session is closed. |
| Filename | Local filename of the file that the user is downloading or uploading. | |

**Related commands**

clear ssh

# show ssh client

**Overview** This command displays the current configuration of the Secure Shell client.

**Syntax**

```
show ssh client
```

**Mode** User Exec, Privileged Exec and Global Configuration

**Example** To display the current configuration for SSH clients on the login shell, use the command:

```
awplus# show ssh client
```

**Output** Figure 60-7: Example output from the **show ssh client** command

```
Secure Shell Client Configuration
-----------------------------------------------------------------
Port                              : 22
Version                           : 2,1
Connect Timeout                   : 30 seconds
Session Timeout                   : 0 (off)
Debug                             : NONE
```

**Table 7:** Parameters in the output of the **show ssh client** command

| Parameter | Description |
|---|---|
| Port | SSH server TCP port where the SSH client connects to. The default is port 22. |
| Version | SSH server version; either "1", "2" or "2,1". |
| Connect Timeout | Time in seconds that the SSH client waits for an SSH session to establish. If the value is 0, the connection is terminated when it reaches the TCP timeout. |
| Debug | Whether debugging is active on the client. |

**Related commands** show ssh server

# show ssh server

**Overview** This command displays the current configuration of the Secure Shell server.

Note that changes to the SSH configuration affects only new SSH sessions coming from remote hosts, and does not affect existing sessions.

**Syntax** `show ssh server`

**Mode** User Exec, Privileged Exec, and Global Configuration

**Example** To display the current configuration of the Secure Shell server, use the command:

```
awplus# show ssh server
```

**Output** Figure 60-8: Example output from the **show ssh server** command

```
Secure Shell Server Configuration
-----------------------------------------------------------------
SSH Server                          : Enabled
Port                                : 22
Version                             : 2
Services                            : scp, sftp
User Authentication                 : publickey, password
Resolve Hosts                       : Disabled
Session Timeout                     : 0 (Off)
Login Timeout                       : 60 seconds
Maximum Authentication Tries        : 6
Maximum Startups                    : 10
Debug                               : NONE
Ciphers                             : chacha20-poly1305@openssh.com,
aes128-ctr,aes192-ctr,aes256-ctr,aes128-gcm@openssh.com,aes256-gcm
@openssh.com
```

**Table 8:** Parameters in the output of the **show ssh server** command

| Parameter | Description |
|---|---|
| `SSH Server` | Whether the Secure Shell server is enabled or disabled. |
| `Port` | TCP port where the Secure Shell server listens for connections. The default is port 22. |
| `Version` | SSH server version; either '1', '2' or '2,1'. |
| `Services` | List of the available Secure Shell service; one or more of SHELL, SCP or SFTP. |
| `Authentication` | List of available authentication methods. |

**Table 8:** Parameters in the output of the **show ssh server** command (cont.)

| Parameter | Description |
|---|---|
| `Login Timeout` | Time (in seconds) that the SSH server will wait the SSH session to establish. If the value is 0, the client login will be terminated when TCP timeout reaches. |
| `Idle Timeout` | Time (in seconds) that the SSH server will wait to receive data from the SSH client. The server disconnects if this timer limit is reached. If set at 0, the idle timer remains off. |
| `Maximum Startups` | The maximum number of concurrent connections that are waiting authentication. The default is 10. |
| `Debug` | Whether debugging is active on the server. |
| `Ciphers` | The current ciphers in use. |

**Related commands**

show ssh

show ssh client

# show ssh server allow-users

**Overview** This command displays the user entries in the allow list of the SSH server.

**Syntax** `show ssh server allow-users`

**Mode** User Exec, Privileged Exec and Global Configuration

**Example** To display the user entries in the allow list of the SSH server, use the command:

```
awplus# show ssh server allow-users
```

**Output** Figure 60-9: Example output from the **show ssh server allow-users** command

```
Username          Remote Hostname (pattern)
----------------- --------------------------------
awplus            192.168.*
john
manager           *.alliedtelesis.com
```

**Table 9:** Parameters in the output of the **show ssh server allow-users** command

| Parameter | Description |
|---|---|
| `Username` | User name that is allowed to access the SSH server. |
| `Remote Hostname (pattern)` | IP address or hostname pattern of the remote client. The user is allowed requests from a host that matches this pattern. If no hostname is specified, the user is allowed from all hosts. |

**Related commands** ssh server allow-users

ssh server deny-users

# show ssh server deny-users

**Overview** This command displays the user entries in the deny list of the SSH server. The user in the deny list is rejected to access the SSH server. If a user is not included in the access list of the SSH server, the user is also rejected.

**Syntax**

```
show ssh server deny-users
```

**Mode** User Exec, Privileged Exec and Global Configuration

**Example** To display the user entries in the deny list of the SSH server, use the command:

```
awplus# show ssh server deny-users
```

**Output** Figure 60-10: Example output from the **show ssh server deny-users** command

```
Username          Remote Hostname (pattern)
----------------- --------------------------------
john              *.b-company.com
manager           192.168.2.*
```

**Table 10:** Parameters in the output of the **show ssh server deny-user** command

| Parameter | Description |
|---|---|
| Username | The user that this rule applies to. |
| Remote Hostname (pattern) | IP address or hostname pattern of the remote client. The user is denied requests from a host that matches this pattern. If no hostname is specified, the user is denied from all hosts. |

**Related commands** ssh server allow-users

ssh server deny-users

# ssh

**Overview** Use this command to initiate a Secure Shell connection to a remote SSH server.

If the server requests a password to login, you need to type in the correct password at the "Password:" prompt.

An SSH client identifies the remote SSH server by its public key registered on the client device. If the server identification is changed, server verification fails. If the public key of the server has been changed, the public key of the server must be explicitly added to the known host database.

***NOTE:*** *A hostname specified with SSH cannot begin with a hyphen (-) character.*

**Syntax**

```
ssh [ip|ipv6] [user <username>|port <1-65535>|version {1|2}]
<remote-device> [<command>]
```

**Syntax (VRF-lite)** If the platform supports multicast for VRFs then specifying a VRF name the command will take effect on that VRF and not specifying a VRF will do it for the global VRF.

```
ssh vrf <vrf-name> [ip|ipv6] [user <username>|port
<1-65535>|version {1|2}] <remote-device> [<command>]
```

| Parameter | Description | |
|---|---|---|
| `vrf` | Apply the command to the specified VRF instance. | |
| *<vrf-name>* | The name of the VRF instance. | |
| `ip` | Specify IPv4 SSH. | |
| `ipv6` | Specify IPv6 SSH. | |
| `user` | Login user. If user is specified, the username is used for login to the remote SSH server when user authentication is required. Otherwise the current user name is used. | |
| | *<username>* | User name to login on the remote server. |
| `port` | SSH server port. If port is specified, the SSH client connects to the remote SSH server with the specified TCP port. Otherwise, the client port configured by "ssh client" command or the default TCP port (22) is used. | |
| | *<1-65535>* | TCP port. |
| `version` | SSH client version. If version is specified, the SSH client supports only the specified SSH version. By default, SSH client uses SSHv2 first. If the server does not support SSHv2, it will try SSHv1. The default version can be configured by "ssh client" command. | |
| | 1 | Use SSH version 1. |
| | 2 | Use SSH version 2. |

| Parameter | Description |
|---|---|
| *<remote-device>* | IPv4/IPv6 address or hostname of a remote server. The address is in the format A.B.C.D for an IPv4 address, or in the format X:X::X:X for an IPv6 address. Note that a hostname specified with SSH cannot begin with a hyphen (-) character. |
| *<command>* | A command to execute on the remote server. If a command is specified, the command is executed on the remote SSH server and the session is disconnected when the remote command finishes. |

**Mode**

User Exec and Privileged Exec

**Examples**

To login to the remote SSH server at 192.0.2.5, use the command:

```
awplus# ssh ip 192.0.2.5
```

To login to the remote SSH server at 192.0.2.5 as user “manager”, use the command:

```
awplus# ssh ip user manager 192.0.2.5
```

To login to the remote SSH server at 192.0.2.5 that is listening on TCP port 2000, use the command:

```
awplus# ssh port 2000 192.0.2.5
```

To login to the remote SSH server with “example_host” using an IPv6 session, use the command:

```
awplus# ssh ipv6 example_host
```

To run the **cmd** command on the remote SSH server at 192.0.2.5, use the command:

```
awplus# ssh ip 192.0.2.5 cmd
```

**Example (VRF-lite)**

To login to the remote SSH server at 192.168.1.1 on VRF “red”, use the command:

```
awplus# ssh vrf red 192.168.1.1
```

**Related commands**

crypto key generate userkey

crypto key pubkey-chain knownhosts

debug ssh client

ssh client

**Command changes**

Version 5.4.6-2.1: VRF-lite support added for AR-Series devices.

Version 5.4.8-1.2: secure mode syntax added for x220, x930, x550, XS900MX.

Version 5.4.8-2.1: secure mode syntax added for x950, SBx908 GEN2.

# ssh client

**Overview**

This command modifies the default configuration parameters of the Secure Shell (SSH) client. The configuration is used for any SSH client on the device to connect to remote SSH servers. Any parameters specified on SSH client explicitly override the default configuration parameters.

The change affects the current user shell only. When the user exits the login session, the configuration does not persist. This command does not affect existing SSH sessions.

The **no** variant of this command resets configuration parameters of the Secure Shell (SSH) client changed by the ssh client command, and restores the defaults.

This command does not affect the existing SSH sessions.

**Syntax**

```
ssh client {port <1-65535>|version {1|2}|session-timeout
<0-3600>|connect-timeout <1-600>}
```

```
no ssh client {port|version|session-timeout|connect-timeout}
```

| Parameter | Description | |
|---|---|---|
| `port` | The default TCP port of the remote SSH server. If an SSH client specifies an explicit port of the server, it overrides the default TCP port.<br>Default: 22 | |
| | *<1-65535>* | TCP port number. |
| `version` | The SSH version used by the client for SSH sessions.<br>The SSH client supports both version 2 and version 1<br>Default: version 2<br>Note: SSH version 2 is the default SSH version. SSH client supports SSH version 1 if SSH version 2 is not configured using a ssh version command. | |
| | 1 | SSH clients on the device supports SSH version 1 only. |
| | 2 | SSH clients on the device supports SSH version 2 only |
| `session-timeout` | The global session timeout for SSH sessions. If the session timer lapses since the last time an SSH client received data from the remote server, the session is terminated. If the value is 0, then the client does not terminate the session. Instead, the connection is terminated when it reaches the TCP timeout.<br>Default: 0 (session timer remains off) | |
| | *<0-3600>* | Timeout in seconds. |

| Parameter | Description | |
|---|---|---|
| `connect-timeout` | The maximum time period that an SSH session can take to become established. The SSH client terminates the SSH session if this timeout expires and the session is still not established.<br>Default: 30 | |
| | *<1-600>* | Timeout in seconds. |

**Mode** Privileged Exec

**Examples** To configure the default TCP port for SSH clients to 2200, and the session timer to 10 minutes, use the command:

```
awplus# ssh client port 2200 session-timeout 600
```

To configure the connect timeout of SSH client to 10 seconds, use the command:

```
awplus# ssh client connect-timeout 10
```

To restore the connect timeout to its default, use the command:

```
awplus# no ssh client connect-timeout
```

**Related commands** show ssh client

ssh

# ssh server

**Overview** Use this command to modify the configuration of the SSH server. Changing these parameters affects new SSH sessions connecting to the device.

Use the **no** variant of this command to restore the configuration of a specified parameter to its default. The change affects the SSH server immediately if the server is running. Otherwise, the configuration is used when the server starts.

To enable the SSH server, use the service ssh command.

**Syntax**

```
ssh server {[v1v2|v2only]|<1-65535>}
ssh server {[session-timeout <0-3600>] [login-timeout <1-600>]
[max-startups <1-128>]}
no ssh server {[session-timeout] [login-timeout]
[max-startups]}
```

| Parameter | Description |
|---|---|
| v1v2 | Supports both SSHv2 and SSHv1client connections.<br>Default: v1v2 |
| v2only | Supports SSHv2 client connections only. |
| *<1-65535>* | The TCP port number that the server listens to for incoming SSH sessions.<br>Default: 22 |
| session-timeout | The maximum time period that the server waits before deciding that a session is inactive and should be terminated. The server considers the session inactive when it has not received any data from the client, and when the client does not respond to keep alive messages.<br>Default: 0 (session timer remains off). |
| | *<0-3600>* Timeout in seconds. |
| login-timeout | The maximum time period the server waits before disconnecting an unauthenticated client.<br>Default: 60 |
| | *<1-600>* Timeout in seconds. |
| max-startups | The maximum number of concurrent unauthenticated connections the server accepts. When the number of SSH connections awaiting authentication reaches the limit, the server drops any additional connections until authentication succeeds or the login timer expires for a connection.<br>Default: 10 |
| | *<1-128>* Number of sessions. |

**Mode** Global Configuration

**Examples**

To configure the session timer of SSH server to 10 minutes (600 seconds), use the commands:

```
awplus# configure terminal
awplus(config)# ssh server login-timeout 600
```

To configure the login timeout of SSH server to 30 seconds, use the commands:

```
awplus# configure terminal
awplus(config)# ssh server login-timeout 30
```

To limit the number of SSH client connections waiting for authentication from SSH server to 3, use the commands:

```
awplus# configure terminal
awplus(config)# ssh server max-startups 3
```

To set max-startups parameters of SSH server to the default configuration, use the commands:

```
awplus# configure terminal
awplus(config)# no ssh server max-startups
```

To support the Secure Shell server with TCP port 2200, use the commands:

```
awplus# configure terminal
awplus(config)# ssh server 2200
```

To force the Secure Shell server to support SSHv2 only, use the commands:

```
awplus# configure terminal
awplus(config)# ssh server v2only
```

To support both SSHv2 and SSHv1, use the commands:

```
awplus# configure terminal
awplus(config)# ssh server v1v2
```

**Related commands**

show ssh server

ssh client

# ssh server allow-users

**Overview**

This command adds a username pattern to the allow list of the SSH server. If the user of an incoming SSH session matches the pattern, the session is accepted.

When there are no registered users in the server's database of allowed users, the SSH server does not accept SSH sessions even when enabled.

SSH server also maintains the deny list. The server checks the user in the deny list first. If a user is listed in the deny list, then the user access is denied even if the user is listed in the allow list.

The **no** variant of this command deletes a username pattern from the allow list of the SSH server. To delete an entry from the allow list, the username and hostname pattern should match exactly with the existing entry.

**Syntax**

```
ssh server allow-users <username-pattern> [<hostname-pattern>]
no ssh server allow-users <username-pattern>
[<hostname-pattern>]
```

| Parameter | Description |
|---|---|
| *<username-pattern>* | The username pattern that users can match to. An asterisk acts as a wildcard character that matches any string of characters. |
| *<hostname-pattern>* | The host name pattern that hosts can match to. If specified, the server allows the user to connect only from hosts matching the pattern. An asterisk acts as a wildcard character that matches any string of characters. |

**Mode**

Global Configuration

**Examples**

To allow the user `john` to create an SSH session from any host, use the commands:

```
awplus# configure terminal
awplus(config)# ssh server allow-users john
```

To allow the user `john` to create an SSH session from a range of IP address (from 192.168.1.1 to 192.168.1.255), use the commands:

```
awplus# configure terminal
awplus(config)# ssh server allow-users john 192.168.1.*
```

To allow the user `john` to create a SSH session from `a-company.com` domain, use the commands:

```
awplus# configure terminal
awplus(config)# ssh server allow-users john *.a-company.com
```

To delete the existing user entry `john 192.168.1.*` in the allow list, use the commands:

```
awplus# configure terminal
awplus(config)# no ssh server allow-users john 192.168.1.*
```

**Related commands**

show running-config ssh

show ssh server allow-users

ssh server deny-users

# ssh server authentication

**Overview** This command enables RSA public-key or password user authentication for SSH Server. Apply the **password** keyword with the **ssh server authentication** command to enable password authentication for users. Apply the **publickey** keyword with the **ssh server authentication** command to enable RSA public-key authentication for users.

Use the **no** variant of this command to disable RSA public-key or password user authentication for SSH Server. Apply the **password** keyword with the **no ssh authentication** command to disable password authentication for users. Apply the required **publickey** keyword with the **no ssh authentication** command to disable RSA public-key authentication for users.

**Syntax**

```
ssh server authentication {password|publickey}
no ssh server authentication {password|publickey}
```

| Parameter | Description |
|---|---|
| `password` | Specifies user password authentication for SSH server. |
| `publickey` | Specifies user publickey authentication for SSH server. |

**Default** Both RSA public-key authentication and password authentication are enabled by default.

**Mode** Global Configuration

**Usage** For password authentication to authenticate a user, password authentication for a user must be registered in the local user database or on an external RADIUS server, before using the **ssh server authentication password** command.

For RSA public-key authentication to authenticate a user, a public key must be added for the user, before using the **ssh server authentication publickey** command.

**Examples** To enable `password` authentication for users connecting through SSH, use the commands:

```
awplus# configure terminal
awplus(config)# ssh server authentication password
```

To enable `publickey` authentication for users connecting through SSH, use the commands:

```
awplus# configure terminal
awplus(config)# ssh server authentication publickey
```

To disable `password` authentication for users connecting through SSH, use the commands:

```
awplus# configure terminal
awplus(config)# no ssh server authentication password
```

To disable `publickey` authentication for users connecting through SSH, use the commands:

```
awplus# configure terminal
awplus(config)# no ssh server authentication publickey
```

**Related commands**

crypto key pubkey-chain userkey

service ssh

show ssh server

# ssh server deny-users

**Overview**

This command adds a username pattern to the deny list of the SSH server. If the user of an incoming SSH session matches the pattern, the session is rejected.

SSH server also maintains the allow list. The server checks the user in the deny list first. If a user is listed in the deny list, then the user access is denied even if the user is listed in the allow list.

If a hostname pattern is specified, the user is denied from the hosts matching the pattern.

The **no** variant of this command deletes a username pattern from the deny list of the SSH server. To delete an entry from the deny list, the username and hostname pattern should match exactly with the existing entry.

**Syntax**

```
ssh server deny-users <username-pattern> [<hostname-pattern>]
no ssh server deny-users <username-pattern>
[<hostname-pattern>]
```

| Parameter | Description |
|---|---|
| *<username-pattern>* | The username pattern that users can match to. The username must begin with a letter. Valid characters are all numbers, letters, and the underscore, hyphen, full stop and asterisk symbols. An asterisk acts as a wildcard character that matches any string of characters. |
| *<hostname-pattern>* | The host name pattern that hosts can match to. If specified, the server denies the user only when they connect from hosts matching the pattern. An asterisk acts as a wildcard character that matches any string of characters. |

**Mode**

Global Configuration

**Examples**

To deny the user `john` to access SSH login from any host, use the commands:

```
awplus# configure terminal
awplus(config)# ssh server deny-users john
```

To deny the user john to access SSH login from a range of IP address (from 192.168.2.1 to 192.168.2.255), use the commands:

```
awplus# configure terminal
awplus(config)# ssh server deny-users john 192.168.2.*
```

To deny the user `john` to access SSH login from `b-company.com` domain, use the commands:

```
awplus# configure terminal
awplus(config)# ssh server deny-users john*.b-company.com
```

To delete the existing user entry `john 192.168.2.*` in the deny list, use the commands:

```
awplus# configure terminal
awplus(config)# no ssh server deny-users john 192.168.2.*
```

**Related commands**

show running-config ssh

show ssh server deny-users

ssh server allow-users

# ssh server max-auth-tries

**Overview** Use this command to specify the maximum number of SSH authentication attempts that the device will allow.

Use the **no** variant of this command to return the maximum number of attempts to its default value of 6.

**Syntax**

```
ssh server max-auth-tries <1-32>
no ssh server max-auth-tries
```

| Parameter | Description |
|---|---|
| *<1-32>* | Maximum number of SSH authentication attempts the device will allow. |

**Default** 6 attempts

**Mode** Global Configuration

**Usage** By default, users must wait one second after a failed login attempt before trying again. You can increase this gap by using the command aaa login fail-delay.

**Example** To set the maximum number of SSH authentication attempts to 3, use the commands:

```
awplus# configure terminal
awplus(config)# ssh server max-auth-tries 3
```

**Related commands** show ssh server

# ssh server resolve-host

**Overview**

This command enables resolving an IP address from a host name using a DNS server for client host authentication.

The **no** variant of this command disables this feature.

**Syntax**

```
ssh server resolve-hosts
no ssh server resolve-hosts
```

**Default**

This feature is disabled by default.

**Mode**

Global Configuration

**Usage notes**

Your device has a DNS Client that is enabled automatically when you add a DNS server to your device. Use the ip name-server command to add a DNS server to the list of servers that the device queries.

**Example**

To resolve a host name using a DNS server, use the commands:

```
awplus# configure terminal
awplus(config)# ssh server resolve-hosts
```

**Related commands**

ip name-server

show ssh server

ssh server allow-users

ssh server deny-users

# ssh server scp

**Overview**

This command enables the Secure Copy (SCP) service on the SSH server. Once enabled, the server accepts SCP requests from remote clients.

You must enable the SSH server as well as this service before the device accepts SCP connections. The SCP service is enabled by default as soon as the SSH server is enabled.

The **no** variant of this command disables the SCP service on the SSH server. Once disabled, SCP requests from remote clients are rejected.

**Syntax**

```
ssh server scp
no ssh server scp
```

**Mode**

Global Configuration

**Examples**

To enable the SCP service, use the commands:

```
awplus# configure terminal
awplus(config)# ssh server scp
```

To disable the SCP service, use the commands:

```
awplus# configure terminal
awplus(config)# no ssh server scp
```

**Related commands**

show running-config ssh

show ssh server

# ssh server secure-ciphers

**Overview**

Use this command to set the SSH server to only negotiate ciphers regarded as current-best-practice.

Use the **no** variant of this command to return to the default setting of not set.

**Syntax**

```
ssh server secure-ciphers
no ssh server secure-ciphers
```

| Parameter | Description |
|---|---|
| `secure-ciphers` | Negotiate only with ciphers that are still considered current-best-practice and secure |

**Default**

Not set

**Mode**

Global Configuration

**Usage notes**

This command uses the same cipher string as the OpenSSH default, which excludes CBC, as CBC has been regarded as a weak cipher.

When the command is used, the ciphers included are: chacha20-poly1305@openssh.com, aes128-ctr, aes192-ctr, aes256-ctr, aes128-gcm@openssh.com, aes256-gcm@openssh.com

**Example**

To configure the SSH server to only negotiate ciphers regarded as current best practice, use the commands:

```
awplus# configure terminal
awplus(config)# ssh server secure-ciphers
```

**Related commands**

show ssh server

**Command changes**

Version 5.5.0-1.1: command added

# ssh server sftp

**Overview**

This command enables the Secure FTP (SFTP) service on the SSH server. Once enabled, the server accepts SFTP requests from remote clients.

You must enable the SSH server as well as this service before the device accepts SFTP connections. The SFTP service is enabled by default as soon as the SSH server is enabled. If the SSH server is disabled, SFTP service is unavailable.

The **no** variant of this command disables SFTP service on the SSH server. Once disabled, SFTP requests from remote clients are rejected.

**Syntax**

```
ssh server sftp
no ssh server sftp
```

**Mode**

Global Configuration

**Examples**

To enable the SFTP service, use the commands:

```
awplus# configure terminal
awplus(config)# ssh server sftp
```

To disable the SFTP service, use the commands:

```
awplus# configure terminal
awplus(config)# no ssh server sftp
```

**Related commands**

show running-config ssh

show ssh server

# undebug ssh client

**Overview** This command applies the functionality of the **no** debug ssh client command.

# undebug ssh server

**Overview** This command applies the functionality of the **no** debug ssh server command.

# 61 Trigger Commands

## Introduction

**Overview**

This chapter provides an alphabetical reference for commands used to configure Triggers. For more information, see the Triggers Feature Overview and Configuration Guide.

For information on filtering and saving command output, see the "Getting Started with AlliedWare Plus" Feature Overview and Configuration Guide.

**Command List**


- "active (trigger)" on page 3180
- "day" on page 3181
- "debug trigger" on page 3183
- "description (trigger)" on page 3184
- "repeat" on page 3185
- "script" on page 3186
- "show debugging trigger" on page 3188
- "show running-config trigger" on page 3189
- "show trigger" on page 3190
- "test" on page 3195
- "time (trigger)" on page 3196
- "trap" on page 3198
- "trigger" on page 3199
- "trigger activate" on page 3200
- "type atmf node" on page 3201
- "type card" on page 3204
- "type cpu" on page 3205
- "type interface" on page 3206

- "type linkmon-probe" on page 3207
- "type log" on page 3209
- "type memory" on page 3210
- "type periodic" on page 3211
- "type ping-poll" on page 3212
- "type reboot" on page 3213
- "type time" on page 3214
- "type usb" on page 3215
- "undebug trigger" on page 3216

# active (trigger)

**Overview**

This command enables a trigger. This allows the trigger to activate when its trigger conditions are met.

The **no** variant of this command disables a trigger. While in this state the trigger cannot activate when its trigger conditions are met.

**Syntax**

```
active
no active
```

**Default**

Active, which means that triggers are enabled by default

**Mode**

Trigger Configuration

**Usage notes**

Configure a trigger first before you use this command to activate it.

For information about configuring a trigger, see the Triggers_Feature Overview and Configuration Guide.

**Examples**

To enable trigger 172, so that it can activate when its trigger conditions are met, use the commands:

```
awplus# configure terminal
awplus(config)# trigger 172
awplus(config-trigger)# active
```

To disable trigger 182, preventing it from activating when its trigger conditions are met, use the commands:

```
awplus# configure terminal
awplus(config)# trigger 182
awplus(config-trigger)# no active
```

**Related commands**

show trigger

trigger

trigger activate

# day

**Overview** This command specifies the days or date that the trigger can activate on. You can specify one of:

- A specific date
- A specific day of the week
- A list of days of the week
- A day of any month of any year
- A day of a specific month in any year
- Every day

By default, the trigger can activate on any day.

**Syntax**

```
day every-day
day <1-31>
day <1-31> <month>
day <1-31> <month> <year>
day <weekday>
```

| Parameter | Description |
|---|---|
| `every-day` | Sets the trigger so that it can activate on any day. |
| *<1-31>* | Day of the month the trigger is permitted to activate on. |
| *<month>* | Sets the month that the trigger is permitted to activate on. Valid keywords are: **january, february, march, april, may, june, july, august, september, october, november**, and **december**. |
| *<year>* | Sets the year that the trigger is permitted to activate in, between 2000 and 2035. |
| *<weekday>* | Sets the days of the week that the trigger can activate on. You can specify one or more week days in a space separated list. Valid keywords are: **monday, tuesday, wednesday, thursday, friday, saturday**, and **sunday**. |

**Default** **every-day**, so by default, the trigger can activate on any day.

**Mode** Trigger Configuration

**Usage notes** For example trigger configurations that use the **day** command, see "Restrict Internet Access" and "Turn off Power to Port LEDs" in the Triggers Feature Overview and Configuration Guide.

**Examples**

To permit trigger 55 to activate on the 1 June 2019, use the commands:

```
awplus# configure terminal
awplus(config)# trigger 55
awplus(config-trigger)# day 1 jun 2019
```

To permit trigger 12 to activate on Mondays, Wednesdays and Fridays, use the commands:

```
awplus# configure terminal
awplus(config)# trigger 12
awplus(config-trigger)# day monday wednesday friday
```

To permit trigger 17 to activate on the 5th day of any month, in any year, use the commands:

```
awplus# configure terminal
awplus(config)# trigger 17
awplus(config-trigger)# day 5
```

To permit trigger 6 to activate on the 20th day of September, in any year, use the commands:

```
awplus# configure terminal
awplus(config)# trigger 6
awplus(config-trigger)# day 20 september
```

To permit trigger 14 to activate on the 1st day of each month, in any year, at 11.00am, use the commands:

```
awplus# configure terminal
awplus(config)# trigger 14
awplus(config-trigger)# day 1
awplus(config-trigger)# type time 11:00
```

**Related commands**

show trigger

type time

trigger

**Command changes**

Version 5.4.8-2.1: day of the month functionality added

# debug trigger

**Overview**

This command enables trigger debugging. This generates detailed messages about how your device is processing the trigger commands and activating the triggers.

The **no** variant of this command disables trigger debugging.

**Syntax**

```
debug trigger
no debug trigger
```

**Mode**

Privilege Exec

**Examples**

To start trigger debugging, use the command:

```
awplus# debug trigger
```

To stop trigger debugging, use the command:

```
awplus# no trigger
```

**Related commands**

show debugging trigger

show trigger

test

trigger

undebug trigger

# description (trigger)

**Overview**

This command adds an optional description to help you identify the trigger. This description is displayed in show command outputs and log messages.

The **no** variant of this command removes a trigger's description. The show command outputs and log messages stop displaying a description for this trigger.

**Syntax**

```
description <description>
no description
```

| Parameter | Description |
|---|---|
| *<description>* | A word or phrase that uniquely identifies this trigger or its purpose. Valid characters are any printable character and spaces, up to a maximum of 40 characters. |

**Mode**

Trigger Configuration

**Examples**

To give trigger 240 the description `daily status report`, use the commands:

```
awplus# configure terminal
awplus(config)# trigger 240
awplus(config-trigger)# description daily status report
```

To remove the description from trigger 36, use the commands:

```
awplus# configure terminal
awplus(config)# trigger 36
awplus(config-trigger)# no description
```

**Related commands**

show trigger

test

trigger

# repeat

**Overview** This command specifies the number of times that a trigger is permitted to activate. This allows you to specify whether you want the trigger to activate:

- only the first time that the trigger conditions are met
- a limited number of times that the trigger conditions are met
- an unlimited number of times

Once the trigger has reached the limit set with this command, the trigger remains in your configuration but cannot be activated. Use the **repeat** command again to reset the trigger so that it is activated when its trigger conditions are met.

By default, triggers can activate an unlimited number of times. To reset a trigger to this default, specify either **yes** or **forever**.

**Syntax**

```
repeat {forever|no|once|yes|<1-4294967294>}
```

| Parameter | Description |
|---|---|
| `yes\|forever` | The trigger repeats indefinitely, or until disabled. |
| `no\|once` | The trigger activates only once. |
| *<1-4292967294>* | The trigger repeats the specified number of times. |

**Mode** Trigger Configuration

**Examples** To allow trigger 21 to activate only once, use the commands:

```
awplus# configure terminal
awplus(config)# trigger 21
awplus(config-trigger)# repeat no
```

To allow trigger 22 to activate an unlimited number of times whenever its trigger conditions are met, use the commands:

```
awplus# configure terminal
awplus(config)# trigger 22
awplus(config-trigger)# repeat forever
```

To allow trigger 23 to activate only the first `10` times the conditions are met, use the commands:

```
awplus# configure terminal
awplus(config)# trigger 23
awplus(config-trigger)# repeat 10
```

**Related commands** show trigger

trigger

# script

**Overview** This command specifies one or more scripts that are to be run when the trigger activates. You can add up to five scripts to a single trigger.

The sequence in which the trigger runs the scripts is specified by the number you set before the name of the script file. One script is executed completely before the next script begins.

Scripts may be either ASH shell scripts, indicated by a **.sh** filename extension suffix, or AlliedWare Plus™ scripts, indicated by a **.scp** filename extension suffix. AlliedWare Plus™ scripts only need to be readable.

The **no** variant of this command removes one or more scripts from the trigger's script list. The scripts are identified by either their name, or by specifying their position in the script list. The **all** parameter removes all scripts from the trigger.

**Syntax**

```
script <1-5> {<filename>}
no script {<1-5>|<filename>|all}
```

| Parameter | Description |
|---|---|
| *<1-5>* | The position of the script in execution sequence. The trigger runs the lowest numbered script first. |
| *<filename>* | The path to the script file. |

**Mode** Trigger Configuration

**Examples** To configure trigger 71 to run the script flash:/cpu_trig.sh in position 3 when the trigger activates, use the commands:

```
awplus# configure terminal
awplus(config)# trigger 71
awplus(config-trigger)# script 3 flash:/cpu_trig.sh
```

To configure trigger 99 to run the scripts **flash:reconfig.scp**, **flash:cpu_trig.sh** and **flash:email.scp** in positions 2, 3 and 5 when the trigger activates, use the following commands:

```
awplus# configure terminal
awplus(config)# trigger 99
awplus(config-trigger)# script 2 flash:/reconfig.scp 3
flash:/cpu_trig.sh 5 flash:/email.scp
```

To remove the scripts 1, 3 and 4 from trigger 71's script list, use the commands:

```
awplus# configure terminal
awplus(config)# trigger 71
awplus(config-trigger)# no script 1 3 4
```

To remove the script flash:/cpu_trig.sh from trigger 71's script list, use the commands:

```
awplus# configure terminal
awplus(config)# trigger 71
awplus(config-trigger)# no script flash:/cpu_trig.sh
```

To remove all the scripts from trigger 71's script list, use the commands:

```
awplus# configure terminal
awplus(config)# trigger 71
awplus(config-trigger)# no script all
```

**Related commands**

show trigger

trigger

# show debugging trigger

**Overview** This command displays the current status for trigger utility debugging. Use this command to show when trigger debugging has been turned on or off from the debug trigger command.

**Syntax** `show debugging trigger`

**Mode** User Exec and Privileged Exec

**Example** To display the current configuration of trigger debugging, use the command:

```
awplus# show debugging trigger
```

**Output** Figure 61-1: Example output from the **show debugging trigger** command

```
awplus#debug trigger
awplus#show debugging trigger
Trigger debugging status:
  Trigger debugging is on

awplus#no debug trigger
awplus#show debugging trigger
Trigger debugging status:
  Trigger debugging is off
```

**Related commands** debug trigger

# show running-config trigger

**Overview** This command displays the current running configuration of the trigger utility.

**Syntax** `show running-config trigger`

**Mode** Privileged Exec

**Example** To display the current configuration of the trigger utility, use the command:

```
awplus# show running-config trigger
```

Figure 61-2: Example output from the **show running-config trigger** command

```
 trigger 1
  type card in

type usb in
 trigger 2

type usb out
 !
```

**Related commands** show trigger

# show trigger

**Overview** This command displays configuration and diagnostic information about the triggers configured on the device. Specify the **show trigger** command without any options to display a summary of the configuration of all triggers.

**Syntax** `show trigger [<1-250>|counter|full]`

| Parameter | Description |
|---|---|
| *<1-250>* | Displays detailed information about a specific trigger, identified by its trigger ID. |
| `counter` | Displays statistical information about all triggers. |
| `full` | Displays detailed information about all triggers. |

**Mode** Privileged Exec

**Example** To get summary information about all triggers, use the following command:

```
awplus# show trigger
```

Table 61-1: Example output from **show trigger**

```
awplus#show trigger
TR# Type & Details       Name                 Ac Te Repeat     #Scr Days/Date
-------------------------------------------------------------------------------
001 CPU (80% any)        Busy CPU             Y  N  5           1   smtwtfs
005 Periodic (30 min)    Regular status check Y  N  Continuous  1   -mtwtf-
007 Memory (85% up)      High mem usage       Y  N  8           1   smtwtfs
011 Time (00:01)         Weekend access       Y  N  Continuous  1   ------s
013 Reboot                                    Y  N  Continuous  2   smtwtfs
019 Ping-poll (5 up)     Connection to svr1   Y  N  Continuous  1   smtwtfs
-------------------------------------------------------------------------------
```

Table 61-2: Parameters in the output of **show trigger**

| Parameter | Description |
|---|---|
| `TR#` | Trigger identifier (ID). |
| `Type & Details` | The trigger type, followed by the trigger details in brackets. |
| `Name` | Descriptive name of the trigger configured with the description (trigger) command. |
| `Ac` | Whether the trigger is active (Y), or inactive (N). |
| `Te` | Whether the trigger is in test mode (Y) or not (N). |

Table 61-2: Parameters in the output of **show trigger** (cont.)

| Parameter | Description |
|---|---|
| Repeat | Whether the trigger repeats continuously, and if not, the configured repeat count for the trigger. To see the number of times a trigger has activated, use the **show trigger** <1-250> command. |
| #Scr | Number of scripts associated with the trigger. |
| Days/Date | Days or date when the trigger may be activated. For the days options, the days are shown as a seven character string representing Sunday to Saturday. A hyphen indicates days when the trigger cannot be activated. |

To display detailed information about trigger 3, use the command:

```
awplus# show trigger 3
```

Figure 61-3: Example output from **show trigger** for a specific trigger

```
awplus#show trigger 1
Trigger Configuration Details
-------------------------------------------------------------
Trigger ..................... 1
Name ........................ display cpu usage when pass 80%
Type and details ........... CPU (80% up)
Days ........................ smtwtfs
Active ...................... Yes
Test ........................ No
Trap ........................ Yes
Repeat ...................... Continuous
Modified .................... Fri Feb 3 17:18:44 2017
Number of activations ....... 0
Last activation ............ not activated
Number of scripts ........... 1
1. shocpu.scp
2.
3.
4.
5.
-------------------------------------------------------------
```

To display detailed information about all triggers, use the command:

```
awplus# show trigger full
```

Table 61-3: Example output from **show trigger full**

```
awplus#show trigger full
Trigger Configuration Details
 ------------------------------------------------------------
Trigger ..................... 1
Name ........................ Busy CPU
Type and details ............ CPU (80% up)
Days ........................ smtwtfs
Active ...................... Yes
Test ........................ No
Trap ........................ Yes
Repeat ...................... Continuous
Modified .................... Fri Feb 3 17:05:16 2017
Number of activations ....... 0
Last activation ............. not activated
Number of scripts ........... 2
  1. flash:/cpu_alert.sh
  2. flash:/reconfig.scp
  3.
  4.
  5.
Trigger ..................... 5
Name ........................ Regular status check
Type and details ............ Periodic (30 min)
Days ........................ smtwtfs
Active ...................... Yes
Test ........................ No
Trap ........................ Yes
Repeat ...................... 5 (2)
Modified .................... Fri Feb 3 17:18:44 2017
Number of activations ....... 0
Last activation ............. Fri Feb 10 18:00:00 2017
Number of scripts ........... 1
  1. flash:/stat_check.scp
  2.
  3.
  4.
  5.
------------------------------------------------------------
```

**Table 62:** Parameters in the output of **show trigger full** and **show trigger** for a specific trigger

| Parameter | Description |
|---|---|
| `Trigger` | The ID of the trigger. |
| `Name` | Descriptive name of the trigger. |
| `Type and details` | The trigger type and its activation conditions. |
| `Days` | The days on which the trigger is permitted to activate. |

**Table 62:** Parameters in the output of **show trigger full** and **show trigger** for a specific trigger (cont.)

| Parameter | Description |
|---|---|
| `Date` | The date on which the trigger is permitted to activate. Only displayed if configured, in which case it replaces "Days". |
| `Active` | Whether or not the trigger is permitted to activate. |
| `Test` | Whether or not the trigger is operating in diagnostic mode. |
| `Trap` | Whether or not the trigger is enabled to send SNMP traps. |
| `Repeat` | Whether the trigger repeats an unlimited number of times (Continuous) or for a set number of times. When the trigger can repeat only a set number of times, then the number of times the trigger has been activated is displayed in brackets. |
| `Modified` | The date and time of the last time that the trigger was modified. |
| `Number of activations` | Number of times the trigger has been activated since the last restart of the device. |
| `Last activation` | The date and time of the last time that the trigger was activated. |
| `Number of scripts` | How many scripts are associated with the trigger, followed by the names of the script files in the order in which they run. |

To display counter information about all triggers use the command:

```
awplus# show trigger counter
```

Figure 61-4: Example output from **show trigger counter**

```
awplus# show trigger counter
Trigger Module Counters
-------------------------------------------------------
Trigger activations                                 4
Last trigger activated                             55
Time triggers activated today                       0
Periodic triggers activated today                   0
Interface triggers activated today                  1
CPU triggers activated today                        2
Memory triggers activated today                     1
Reboot triggers activated today                     0
Ping-poll triggers activated today                  0
USB event triggers activated today                  0
Stack master fail triggers activated today          0
Stack member triggers activated today               0
Stack link triggers activated today                 0
ATMF node triggers activated today                  0
Log triggers activated today                        0
-------------------------------------------------------
```

**Related commands**

active (trigger)

debug trigger

script

trigger

trigger activate

# test

**Overview**

This command puts the trigger into a diagnostic mode. In this mode the trigger may activate but when it does it will not run any of the trigger's scripts. A log message will be generated to indicate when the trigger has been activated.

The **no** variant of this command takes the trigger out of diagnostic mode, restoring normal operation. When the trigger activates, the scripts associated with the trigger will be run, as normal.

**Syntax**

```
test
no test
```

**Mode**

Trigger Configuration

**Usage notes**

Configure a trigger first before you use this command to diagnose it. For information about configuring a trigger, see the Triggers_Feature Overview and Configuration Guide.

**Examples**

To put trigger 5 into diagnostic mode, where no scripts will be run when the trigger activates, use the commands:

```
awplus# configure terminal
awplus(config)# trigger 5
awplus(config-trigger)# test
```

To take trigger 205 out of diagnostic mode, restoring normal operation, use the commands:

```
awplus# configure terminal
awplus(config)# trigger 205
awplus(config-trigger)# no test
```

**Related commands**

show trigger

trigger

# time (trigger)

**Overview** This command specifies the time of day when the trigger is permitted to activate. The after parameter specifies the start of a time period that extends to midnight during which trigger may activate. By default the value of this parameter is 00:00:00 (am); that is, the trigger may activate at any time. The **before** parameter specifies the end of a time period beginning at midnight during which the trigger may activate. By default the value of this parameter is 23:59:59; that is, the trigger may activate at any time. If the value specified for **before** is later than the value specified for **after**, a time period from " after " to " before " is defined, during which the trigger may activate. This command is not applicable to time triggers ( **type time**).

The following figure illustrates how the **before** and **after** parameters operate.

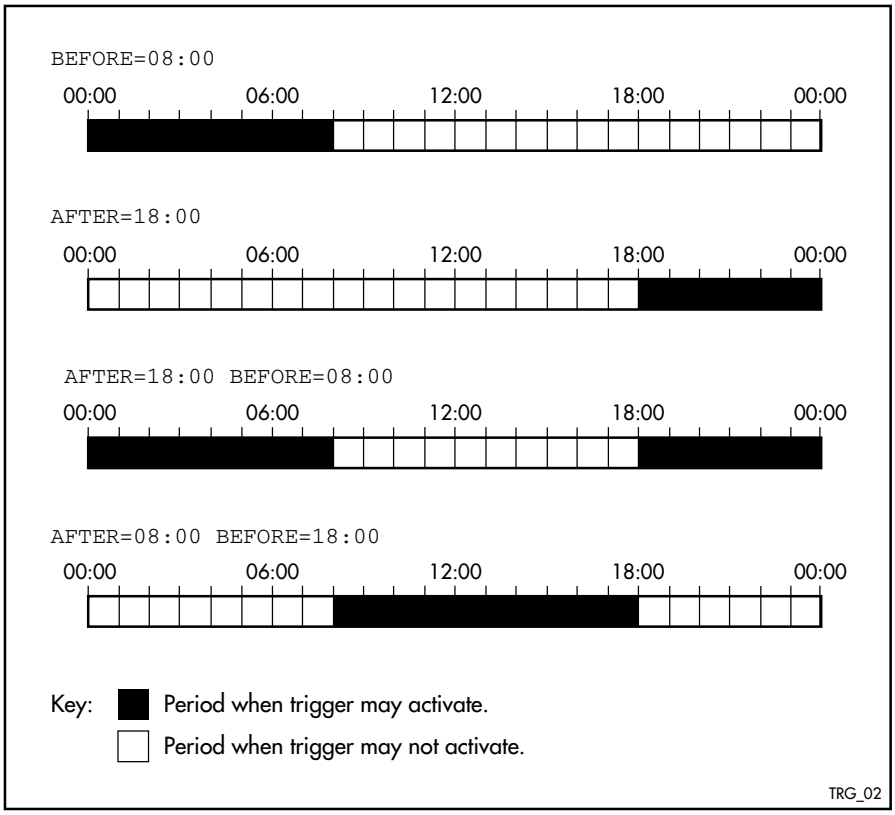


**Syntax** `time {[after <hh:mm:ss>] [before <hh:mm:ss>]}`

| Parameter | Description |
|---|---|
| `after`*<hh:mm:ss>* | The earliest time of day when the trigger may be activated. |
| `before`*<hh:mm:ss>* | The latest time of day when the trigger may be activated. |

**Mode** Trigger Configuration

**Usage notes**

For example trigger configurations that use the **time (trigger)** command, see "Restrict Internet Access" and "Turn off Power to Port LEDs" in the Triggers Feature Overview and Configuration Guide.

**Examples**

To allow trigger 63 to activate between midnight and 10:30am, use the commands:

```
awplus# configure terminal
awplus(config)# trigger 63
awplus(config-trigger)# time before 10:30:00
```

To allow trigger 64 to activate between 3:45pm and midnight, use the commands:

```
awplus# configure terminal
awplus(config)# trigger 64
awplus(config-trigger)# time after 15:45:00
```

To allow trigger 65 to activate between 10:30am and 8:15pm, use the commands:

```
awplus# configure terminal
awplus(config)# trigger 65
awplus(config-trigger)# time after 10:30:00 before 20:15:00
```

**Related commands**

show trigger

trigger

# trap

**Overview**

This command enables the specified trigger to send SNMP traps.

Use the **no** variant of this command to disable the sending of SNMP traps from the specified trigger.

**Syntax**

```
trap
no trap
```

**Default**

SNMP traps are enabled by default for all defined triggers.

**Mode**

Trigger Configuration

**Usage notes**

You must configure SNMP before using traps with triggers. For more information, see:

- Support for Allied Telesis Enterprise_MIBs_in_AlliedWare Plus, for information about which MIB objects are supported.
- the SNMP Feature Overview and Configuration_Guide.
- the SNMP Commands chapter.

Since SNMP traps are enabled by default for all defined triggers, a common usage will be for the **no** variant of this command to disable SNMP traps from a specified trap if the trap is only periodic. Refer in particular to AT-TRIGGER-MIB in the Support for Allied Telesis Enterprise_MIBs_in AlliedWare Plus for further information about the relevant SNMP MIB.

**Examples**

To enable SNMP traps to be sent from trigger 5, use the commands:

```
awplus# configure terminal
awplus(config)# trigger 5
awplus(config-trigger)# trap
```

To disable SNMP traps being sent from trigger 205, use the commands:

```
awplus# configure terminal
awplus(config)# trigger 205
awplus(config-trigger)# no trap
```

**Related commands**

trigger

show trigger

# trigger

**Overview**

This command is used to access the Trigger Configuration mode for the specified trigger. Once Trigger Configuration mode has been entered the trigger type information can be configured and the trigger scripts and other operational parameters can be specified. At a minimum the trigger type information must be specified before the trigger can become active.

The **no** variant of this command removes a specified trigger and all configuration associated with it.

**Syntax**

```
trigger <1-250>
no trigger <1-250>
```

| Parameter | Description |
|---|---|
| *<1-250>* | A trigger ID. |

**Mode**

Global Configuration

**Examples**

To enter trigger configuration mode for trigger 12, use the commands:

```
awplus# configure terminal
awplus(config)# trigger 12
```

To completely remove all configuration associated with trigger 12, use the commands:

```
awplus# configure terminal
awplus(config)# no trigger 12
```

**Related commands**

show trigger

trigger activate

# trigger activate

**Overview** This command is used to manually activate a specified trigger from the Privileged Exec mode, which has been configured with the **trigger** command from the Global Configuration mode.

**Syntax**

```
trigger activate <1-250>
```

| Parameter | Description |
|---|---|
| *<1-250>* | A trigger ID. |

**Mode** Privileged Exec

**Usage notes** This command manually activates a trigger without the normal trigger conditions being met.

The trigger is activated even if it has been configured as inactive by using the command **no active**. The scripts associated with the trigger will be executed even if the trigger is in the diagnostic test mode.

Triggers activated manually do not have their repeat counts decremented or their 'last triggered' time updated, and do not result in updates to the '[type] triggers today' counters.

**Example** To manually activate trigger 12 use the command:

```
awplus# trigger activate 12
```

**Related commands**

active (trigger)

show trigger

trigger

# type atmf node

**Overview** This command configures a trigger to be activated at an AMF node join event or leave event.

**Syntax**

```
type atmf node {join|leave}
```

| Parameter | Description |
|---|---|
| join | AMF node join event. |
| leave | AMF node leave event. |

**Mode** Trigger Configuration

***CAUTION: Only configure this trigger on one device because it is a network wide event.***

**Example 1** To configure trigger 5 to activate at an AMF node leave event, use the following commands. In this example the command is entered on node-1:

```
node1(config)# trigger 5
node1(config-trigger) type atmf node leave
```

**Example 2** The following commands will configure trigger 5 to activate if an AMF node join event occurs on any node within the working set:

```
node1# atmf working-set group all
```

This command returns the following display:

```
====================
node1, node2, node3:
====================

Working set join
```

Note that the running the above command changes the prompt from the name of the local node, to the name of the AMF-Network followed, in square brackets, by the number of member nodes in the working set.

```
AMF-Net[3]# conf t
AMF-Net[3](config)# trigger 5
AMF-Net[3](config-trigger)# type atmf node leave
AMF-Net[3](config-trigger)# description “E-mail on AMF Exit”
AMF-Net[3](config-trigger)# active
```

Enter the name of the script to run at the trigger event.

```
AMF-Net[3](config-trigger)# script 1 email_me.scp
AMF-Net[3](config-trigger)# end
```

Display the trigger configurations

```
AMF-Net[3]# show trigger
```

This command returns the following display:

```
=======
node1:
=======

TR# Type & Details     Description          Ac Te Tr Repeat     #Scr Days/Date
-------------------------------------------------------------------------------
001 Periodic (2 min)   Periodic Status Chk  Y  N  Y Continuous  1   smtwtfs
005 ATMF node (leave)  E-mail on ATMF Exit  Y  N  Y Continuous  1   smtwtfs
-------------------------------------------------------------------------------

==============
Node2, Node3,
==============

TR# Type & Details     Description          Ac Te Tr Repeat     #Scr Days/Date
-------------------------------------------------------------------------------
005 ATMF node (leave)  E-mail on ATMF Exit  Y  N  Y Continuous  1   smtwtfs
-------------------------------------------------------------------------------
```

Display the triggers configured on each of the nodes in the AMF Network.

```
AMF-Net[3]# show running-config trigger
```

This command returns the following display:

```
========
Node1:
========

trigger 1
 type periodic 2
 script 1 atmf.scp
trigger 5
 type atmf node leave
description “E-mail on ATMF Exit”
 script 1 email_me.scp
!

============
Node2, Node3:
============

trigger 5
 type atmf node leave
description “E-mail on ATMF Exit”
 script 1 email_me.scp
!
```

**Related commands** show trigger

# type card

**Overview** Use this command to configure a trigger that activates on either the removal or the insertion of a Secure Digital (SD) or Secure Digital High Capacity (SDHC) card.

**Syntax**

```
type card {in|out}
```

| Parameter | Description |
|---|---|
| `in` | Trigger activates on insertion of a card. |
| `out` | Trigger activates on removal of a card. |

**Mode** Trigger Configuration

**Usage notes** Card triggers cannot execute script files from a card.

For example trigger configurations that use the **type card** command, see "Capture Show Output and Save to an SD Card" in the Triggers Feature Overview and Configuration_Guide.

**Examples** To configure `trigger 1` to activate on the insertion of a card, use the commands:

```
awplus# configure terminal
awplus(config)# trigger 1
awplus(config-trigger)# type card in
```

**Related commands**

trigger

show running-config trigger

show trigger

# type cpu

**Overview** This command configures a trigger to activate based on CPU usage level. Selecting the **up** option causes the trigger to activate when the CPU usage exceeds the specified usage level. Selecting the **down** option causes the trigger to activate when CPU usage drops below the specified usage level. Selecting **any** causes the trigger to activate in both situations. The default is **any**.

**Syntax**

```
type cpu <1-100> [up|down|any]
```

| Parameter | Description |
|---|---|
| *<1-100>* | The percentage of CPU usage at which to trigger. |
| up | Activate when CPU usage exceeds the specified level. |
| down | Activate when CPU usage drops below the specified level |
| any | Activate when CPU usage passes the specified level in either direction |

**Mode** Trigger Configuration

**Usage notes** For an example trigger configuration that uses the **type cpu** command, see "Capture Unusual CPU and RAM Activity" in the Triggers Feature Overview and Configuration Guide.

**Examples** To configure trigger 28 to be a CPU trigger that activates when CPU usage exceeds 80% use the following commands:

```
awplus# configure terminal
awplus(config)# trigger 28
awplus(config-trigger)# type cpu 80 up
```

To configure trigger 5 to be a CPU trigger that activates when CPU usage either rises above or drops below 65%, use the following commands:

```
awplus# configure terminal
awplus(config)# trigger 5
awplus(config-trigger)# type cpu 65
```

or

```
awplus# configure terminal
awplus(config)# trigger 5
awplus(config-trigger)# type cpu 65 any
```

**Related commands** show trigger

trigger

# type interface

**Overview** This command configures a trigger to activate based on the link status of an interface. The trigger can be activated when the interface becomes operational by using the **up** option, or when the interface closes by using the **down** option. The trigger can also be configured to activate when either one of these events occurs by using the **any** option.

**Syntax**

```
type interface <interface> {up|down|any}
```

| Parameter | Description |
|---|---|
| *<interface>* | Interface name. |
| up | Activate when interface becomes operational. |
| down | Activate when the interface closes. |
| any | Activate when any interface link status event occurs. |

**Mode** Trigger Configuration

**Example** To configure trigger 19 to be an interface trigger that activates when port1.0.1 becomes operational, use the following commands:

```
awplus# configure terminal
awplus(config)# trigger 19
awplus(config-trigger)# type interface port1.0.1 up
```

**Related commands**

show trigger

trigger

# type linkmon-probe

**Overview** Use this command to create a trigger that will run a script when a Link Health Monitoring probe reports that a link becomes “good”, “bad”, or “unreachable”.

**Syntax**

```
type linkmon-probe <probename> <profilename>
{good|bad|unreachable|any}
```

| Parameter | Description |
|---|---|
| *<probename>* | The name of the Link Health Monitoring probe that will be used for executing the trigger. |
| *<profilename>* | The name of the Link Health Monitoring performance profile that will be used for determine if the Link Health Monitoring probe is good, bad, or unreachable. |
| good | If the Link Health Monitoring probe becomes 'good' according to the Link Health Monitoring performance profile then the trigger will be executed. |
| bad | If the Link Health Monitoring probe goes 'bad' according to the Link Health Monitoring performance profile then the trigger will be executed. |
| unreachable | If the Link Health Monitoring probe becomes 'unreachable' according to the Link Health Monitoring performance profile then the trigger will be executed. |
| any | If the Link Health Monitoring probe changes state according to the Link Health Monitoring performance profile then the trigger will be executed. |

**Mode** Trigger Configuration

**Example** When the Link Health Monitoring probes sent to the “test-probe” destination no longer meet the performance profile “test-profile” the link will be deemed “bad”. To create a trigger that will run a script when a Link Health Monitoring probe is deemed “bad”, use the following commands:

```
awplus# trigger 1
awplus(config)# script 1 link-bad.scp
awplus(config)# type linkmon-probe test-probe test-profile bad
```

To create a trigger that will run a script when the link is deemed “good” again, use the following commands:

```
awplus# trigger 2
awplus(config)# script 1 link-good.scp
awplus(config)# type linkmon-probe test-probe test-profile good
```

**Related commands** trigger

**Command changes** Version 5.4.8-1.1: command added

# type log

**Overview** Use this command to configure a trigger to activate based on the content of log messages matching a string or regular expression.

**Syntax**

```
type log <log-message-string>
```

| Parameter | Description |
|---|---|
| *<log-message-string>* | A string or a regular expression (PCRE) to match a log message or part of a log message. |

**Default** There is no type or log message string set by default.

**Mode** Trigger Configuration

**Usage notes** Log type triggers fully support regular expressions using PCRE (Perl-Compatible Regular Expression) syntax.

Only log messages of severity level notice or higher can activate a trigger.

Note that any command executed by the script will generate a log message with level notice, and will include '[SCRIPT]' before the command string. Therefore, if something in the script matches the configured log message trigger string, it will retrigger indefinitely.

**Example** To configure trigger 6 to activate when a log message of level notice or higher indicates that any port has 'failed', use the commands:

```
awplus# configure terminal
awplus(config)# trigger 6
awplus(config-trigger)# type log port.+ failed
```

**Related commands** show trigger

trigger

**Command changes** Version 5.4.7-2.1: command added

# type memory

**Overview** This command configures a trigger to activate based on RAM usage level. Selecting the **up** option causes the trigger to activate when memory usage exceeds the specified level. Selecting the **down** option causes the trigger to activate when memory usage drops below the specified level. Selecting **any** causes the trigger to activate in both situations. The default is **any**.

**Syntax**

```
type memory <1-100> [up|down|any]
```

| Parameter | Description |
|---|---|
| *<1-100>* | The percentage of memory usage at which to trigger. |
| up | Activate when memory usage exceeds the specified level. |
| down | Activate when memory usage drops below the specified level. |
| any | Activate when memory usage passes the specified level in either direction. |

**Mode** Trigger Configuration

**Examples** To configure trigger 12 to be a memory trigger that activates when memory usage exceeds 50% use the following commands:

```
awplus# configure terminal
awplus(config)# trigger 12
awplus(config-trigger)# type memory 50 up
```

To configure trigger 40 to be a memory trigger that activates when memory usage either rises above or drops below 65%, use the following commands:

```
awplus# configure terminal
awplus(config)# trigger 40
awplus(config-trigger)# type memory 65
```

or

```
awplus# configure terminal
awplus(config)# trigger 40
awplus(config-trigger)# type memory 65 any
```

**Related commands** show trigger

trigger

# type periodic

**Overview** This command configures a trigger to be activated at regular intervals. The time period between activations is specified in minutes.

**Syntax**

```
type periodic <1-1440>
```

| Parameter | Description |
|---|---|
| *<1-1440>* | The number of minutes between activations. |

**Mode** Trigger Configuration

**Usage notes** A combined limit of 10 triggers of the type periodic and time can be configured. If you attempt to add more than 10 triggers the following error message is displayed:

```
% Cannot configure more than 10 triggers with the type time or
periodic
```

For an example trigger configuration that uses the **type periodic** command, see "See Daily Statistics" in the Triggers_Feature Overview and Configuration Guide.

**Example** To configure trigger 44 to activate periodically at 10 minute intervals use the following commands:

```
awplus# configure terminal
awplus(config)# trigger 44
awplus(config-trigger)# type periodic 10
```

**Related commands**

show trigger

trigger

# type ping-poll

**Overview** This command configures a trigger that activates when Ping Polling identifies that a target device's status has changed. This allows you to run a configuration script when a device becomes reachable or unreachable.

**Syntax**

```
type ping-poll <1-100> {up|down}
```

| Parameter | Description |
|---|---|
| *<1-100>* | The ping poll ID. |
| up | The trigger activates when ping polling detects that the target is reachable. |
| down | The trigger activates when ping polling detects that the target is unreachable. |

**Mode** Trigger Configuration

**Example** To configure trigger 106 to activate when ping poll 12 detects that its target device is now unreachable, use the following commands:

```
awplus# configure terminal
awplus(config)# trigger 106
awplus(config-trigger)# type ping-poll 12 down
```

**Related commands**

show trigger

trigger

# type reboot

**Overview** This command configures a trigger that activates when your device is rebooted.

**Syntax**

```
type reboot
```

**Mode** Trigger Configuration

**Example** To configure trigger 32 to activate when your device reboots, use the following commands:

```
awplus# configure terminal
awplus(config)# trigger 32
awplus(config-trigger)# type reboot
```

**Related commands**

show trigger

trigger

# type time

**Overview** This command configures a trigger that activates at a specified time of day.

**Syntax** `type time <hh:mm>`

| Parameter | Description |
|---|---|
| *<hh:mm>* | The time to activate the trigger. |

**Mode** Trigger Configuration

**Usage** A combined limit of 10 triggers of the type time and type periodic can be configured. If you attempt to add more than 10 triggers the following error message is displayed:

```
% Cannot configure more than 10 triggers with the type time or
periodic
```

**Example** To configure trigger 86 to activate at 15:53, use the following commands:

```
awplus# configure terminal
awplus(config)# trigger 86
awplus(config-trigger)# type time 15:53
```

**Related commands** show trigger

trigger

# type usb

**Overview** Use this command to configure a trigger that activates on either the removal or the insertion of a USB storage device.

**Syntax**

```
type usb {in|out}
```

| Parameter | Description |
|---|---|
| in | Trigger activates on insertion of a USB storage device. |
| out | Trigger activates on removal of a USB storage device. |

**Mode** Trigger Configuration

**Usage notes** USB triggers cannot execute script files from a USB storage device.

**Examples** To configure trigger 1 to activate on the insertion of a USB storage device, use the commands:

```
awplus# configure terminal
awplus(config)# trigger 1
awplus(config-trigger)# type usb in
```

**Related commands**

trigger

show running-config trigger

show trigger

# undebug trigger

**Overview** This command applies the functionality of the **no** debug trigger command.

# 62 Ping-Polling Commands

## Introduction

**Overview**

This chapter provides an alphabetical reference for commands used to configure Ping Polling. For more information, see the Ping Polling Feature Overview and Configuration Guide.

For information on filtering and saving command output, see the "Getting Started with AlliedWare Plus" Feature Overview and Configuration Guide.

Table 62-1: The following table lists the default values when configuring a ping poll

| Default | Value |
|---|---|
| Critical-interval | 1 second |
| Description | No description |
| Fail-count | 5 |
| Length | 32 bytes |
| Normal-interval | 30 seconds |
| Sample-size | 5 |
| Source-ip | The IP address of the interface from which the ping packets are transmitted |
| Time-out | 1 second |
| Up-count | 30 |

**Command List**


- "active (ping-polling)" on page 3219
- "clear ping-poll" on page 3220
- "critical-interval" on page 3221
- "debug ping-poll" on page 3222

- "description (ping-polling)" on page 3223
- "fail-count" on page 3224
- "ip (ping-polling)" on page 3225
- "length (ping-poll data)" on page 3226
- "normal-interval" on page 3227
- "ping-poll" on page 3228
- "sample-size" on page 3229
- "show counter ping-poll" on page 3231
- "show ping-poll" on page 3233
- "source-ip" on page 3237
- "timeout (ping polling)" on page 3239
- "up-count" on page 3240
- "undebug ping-poll" on page 3241

# active (ping-polling)

**Overview**

This command enables a ping-poll instance. The polling instance sends ICMP echo requests to the device with the IP address specified by the ip (ping-polling) command.

By default, polling instances are disabled. When a polling instance is enabled, it assumes that the device it is polling is unreachable.

The **no** variant of this command disables a ping-poll instance. The polling instance no longer sends ICMP echo requests to the polled device. This also resets all counters for this polling instance.

**Syntax**

```
active
no active
```

**Mode**

Ping-Polling Configuration

**Examples**

To activate the ping-poll instance 43, use the commands:

```
awplus# configure terminal
awplus(config)# ping-poll 43
awplus(config-ping-poll)# active
```

To disable the ping-poll instance 43 and reset its counters, use the commands:

```
awplus# configure terminal
awplus(config)# ping-poll 43
awplus(config-ping-poll)# no active
```

**Related commands**

debug ping-poll

ip (ping-polling)

ping-poll

show ping-poll

# clear ping-poll

**Overview** This command resets the specified ping poll, or all ping poll instances. This clears the ping counters, and changes the status of polled devices to unreachable. The polling instance changes to the polling frequency specified with the critical-interval command. The device status changes to reachable once the device responses have reached the up-count.

**Syntax**

```
clear ping-poll {<1-100>|all}
```

| Parameter | Description |
|---|---|
| *<1-100>* | A ping poll ID number. The specified ping poll instance has its counters cleared, and the status of the device it polls is changed to unreachable. |
| `all` | Clears the counters and changes the device status of all polling instances. |

**Mode** Privileged Exec

**Examples** To reset the ping poll instance 12, use the command:

```
awplus# clear ping-poll 12
```

To reset all ping poll instances, use the command:

```
awplus# clear ping-poll all
```

**Related commands**

active (ping-polling)

ping-poll

show ping-poll

# critical-interval

**Overview**

This command specifies the time period in seconds between pings when the polling instance has not received a reply to at least one ping, and when the device is unreachable.

This command enables the device to quickly observe changes in state, and should be set to a much lower value than the normal-interval command.

The **no** variant of this command sets the critical interval to the default of one second.

**Syntax**

```
critical-interval <1-65536>
no critical-interval
```

| Parameter | Description |
|---|---|
| *<1-65536>* | Time in seconds between pings, when the device has failed to a ping, or the device is unreachable. |

**Default**

The default is 1 second.

**Mode**

Ping-Polling Configuration

**Examples**

To set the critical interval to 2 seconds for the ping-polling instance 99, use the commands:

```
awplus# configure terminal
awplus(config)# ping-poll 99
awplus(config-ping-poll)# critical-interval 2
```

To reset the critical interval to the default of one second for the ping-polling instance 99, use the commands:

```
awplus# configure terminal
awplus(config)# ping-poll 99
awplus(config-ping-poll)# no critical-interval
```

**Related commands**

fail-count

normal-interval

sample-size

show ping-poll

timeout (ping polling)

up-count

# debug ping-poll

**Overview**

This command enables ping poll debugging for the specified ping-poll instance. This generates detailed messages about ping execution.

The **no** variant of this command disables ping-poll debugging for the specified ping-poll.

**Syntax**

```
debug ping-poll <1-100>
no debug ping-poll {<1-100>|all}
```

| Parameter | Description |
|---|---|
| *<1-100>* | A unique ping poll ID number. |
| all | Turn off all ping-poll debugging. |

**Mode**

Privileged Exec

**Examples**

To enable debugging for ping-poll instance 88, use the command:

```
awplus# debug ping-poll 88
```

To disable all ping poll debugging, use the command:

```
awplus# no debug ping-poll all
```

To disable debugging for ping-poll instance 88, use the command:

```
awplus# no debug ping-poll 88
```

**Related commands**

active (ping-polling)

clear ping-poll

ping-poll

show ping-poll

undebug ping-poll

# description (ping-polling)

**Overview**

This command specifies a string to describe the ping-polling instance. This allows the ping-polling instance to be recognized easily in show commands. Setting this command is optional.

By default ping-poll instances do not have a description.

Use the **no** variant of this command to delete the description set.

**Syntax**

```
description <description>
no description
```

| Parameter | Description |
|---|---|
| *<description>* | The description of the target. Valid characters are any printable character and spaces. There is no maximum character length. |

**Mode**

Ping-Polling Configuration

**Examples**

To add the text "Primary Gateway" to describe the ping-poll instance 45, use the commands:

```
awplus# configure terminal
awplus(config)# ping-poll 45
awplus(config-ping-poll)# description Primary Gateway
```

To delete the description set for the ping-poll instance 45, use the commands:

```
awplus# configure terminal
awplus(config)# ping-poll 45
awplus(config-ping-poll)# no description
```

**Related commands**

ping-poll

show ping-poll

# fail-count

**Overview**

This command specifies the number of pings that must be unanswered, within the total number of pings specified by the sample-size command, for the ping-polling instance to consider the device unreachable.

If the number set by the sample-size command and the **fail-count** commands are the same, then the unanswered pings must be consecutive. If the number set by the sample-size command is greater than the number set by the **fail-count** command, then a device that does not always reply to pings may be declared unreachable.

The **no** variant of this command resets the fail count to the default.

**Syntax**

```
fail-count <1-100>
no fail-count
```

| Parameter | Description |
|---|---|
| *<1-100>* | The number of pings within the sample size that a reachable device must fail to respond to before it is classified as unreachable. |

**Default**

The default is 5.

**Mode**

Ping-Polling Configuration

**Examples**

To specify the number of pings that must fail within the sample size to determine that a device is unreachable for ping-polling instance 45, use the commands:

```
awplus# configure terminal
awplus(config)# ping-poll 45
awplus(config-ping-poll)# fail-count 5
```

To reset the fail-count to its default of 5 for ping-polling instance 45, use the commands:

```
awplus# configure terminal
awplus(config)# ping-poll 45
awplus(config-ping-poll)# no fail-count
```

**Related commands**

critical-interval

normal-interval

ping-poll

sample-size

show ping-poll

timeout (ping polling)

up-count

# ip (ping-polling)

**Overview** This command specifies the IPv4 address of the device you are polling.

**Syntax** `ip {<ip-address>|<ipv6-address>}`

| Parameter | Description |
|---|---|
| *<ip-address>* | An IPv4 address in dotted decimal notation `A.B.C.D` |
| *<ipv6-address>* | An IPv6 address in hexadecimal notation `X:X::X:X` |

**Mode** Ping-Polling Configuration

**Examples** To set ping-poll instance 5 to poll the device with the IP address `192.168.0.1`, use the commands:

```
awplus# configure terminal
awplus(config)# ping-poll 5
awplus(config-ping-poll)# ip 192.168.0.1
```

To set ping-poll instance 10 to poll the device with the IPv6 address `2001:db8::`, use the commands:

```
awplus# configure terminal
awplus(config)# ping-poll 10
awplus(config-ping-poll)# ip 2001:db8::
```

**Related commands** ping-poll

source-ip

show ping-poll

# length (ping-poll data)

**Overview**

This command specifies the number of data bytes to include in the data portion of the ping packet. This allows you to set the ping packets to a larger size if you find that larger packet types in your network are not reaching the polled device, while smaller packets are getting through. This encourages the polling instance to change the device's status to unreachable when the network is dropping packets of the size you are interested in.

The **no** variant of this command resets the data bytes to the default of 32 bytes.

**Syntax**

```
length <4-1500>
no length
```

| Parameter | Description |
|---|---|
| *<4-1500>* | The number of data bytes to include in the data portion of the ping packet. |

**Default**

The default is 32.

**Mode**

Ping-Polling Configuration

**Examples**

To specify that ping-poll instance 12 sends ping packet with a data portion of 56 bytes, use the commands:

```
awplus# configure terminal
awplus(config)# ping-poll 12
awplus(config-ping-poll)# length 56
```

To reset the number of data bytes in the ping packet to the default of 32 bytes for ping- poll instance 3, use the commands:

```
awplus# configure terminal
awplus(config)# ping-poll 12
awplus(config-ping-poll)# length
```

**Related commands**

ping-poll

show ping-poll

# normal-interval

**Overview** This command specifies the time period between pings when the device is reachable.

The **no** variant of this command resets the time period to the default of 30 seconds.

**Syntax**

```
normal-interval <1-65536>
no normal-interval
```

| Parameter | Description |
|---|---|
| *<1-65536>* | Time in seconds between pings when the target is reachable. |

**Default** The default is 30 seconds.

**Mode** Ping-Polling Configuration

**Examples** To specify a time period of 60 seconds between pings when the device is reachable for ping-poll instance 45, use the commands:

```
awplus# configure terminal
awplus(config)# ping-poll 45
awplus(config-ping-poll)# normal-interval 60
```

To reset the interval to the default of 30 seconds for ping-poll instance 45, use the commands:

```
awplus# configure terminal
awplus(config)# ping-poll 45
awplus(config-ping-poll)# no normal-interval
```

**Related commands**

critical-interval

fail-count

ping-poll

sample-size

show ping-poll

timeout (ping polling)

up-count

# ping-poll

**Overview**

This command enters the ping-poll configuration mode. If a ping-poll exists with the specified number, then this command enters its configuration mode. If no-ping poll exists with the specified number, then this command creates a new ping poll with this ID number.

To configure a ping-poll, create a ping poll using this command, and use the ip (ping-polling) command to specify the device you want the polling instance to poll. It is not necessary to specify any further commands unless you want to change a command's default.

The **no** variant of this command deletes the specified ping poll.

**Syntax**

```
ping-poll <1-100>
no ping-poll <1-100>
```

| Parameter | Description |
|---|---|
| *<1-100>* | A unique ping poll ID number. |

**Mode**

Global Configuration

**Examples**

To create ping-poll instance 3 and enter ping-poll configuration mode, use the commands:

```
awplus# configure terminal
awplus(config)# ping-poll 3
awplus(config-ping-poll)#
```

To delete ping-poll instance 3, use the commands:

```
awplus# configure terminal
awplus(config)# no ping-poll 3
```

**Related commands**

active (ping-polling)

clear ping-poll

debug ping-poll

description (ping-polling)

ip (ping-polling)

length (ping-poll data)

show ping-poll

source-ip

# sample-size

**Overview** This command sets the total number of pings that the polling instance inspects when determining whether a device is unreachable. If the number of pings specified by the **fail-count** command go unanswered within the inspected sample, then the device is declared unreachable.

If the numbers set in this command and fail-count command are the same, the unanswered pings must be consecutive. If the number set by this command is greater than that set with the fail-count command, a device that does not always reply to pings may be declared unreachable.

You cannot set this command's value lower than the fail-count value.

The polling instance uses the number of pings specified by the up-count command to determine when a device is reachable.

The **no** variant of this command resets this command to the default.

**Syntax**

```
sample-size <1-100>
no sample size
```

| Parameter | Description |
|---|---|
| *<1-100>* | Number of pings that determines critical and up counts. |

**Default** The default is 5.

**Mode** Ping-Polling Configuration

**Examples** To set the sample-size to 50 for ping-poll instance 43, use the commands:

```
awplus# configure terminal
awplus(config)# ping-poll 43
awplus(config-ping-poll)# sample-size 50
```

To reset sample-size to the default of 5 for ping-poll instance 43, use the commands:

```
awplus# configure terminal
awplus(config)# ping-poll 43
awplus(config-ping-poll)# no sample-size
```

**Related commands**

critical-interval

fail-count

normal-interval

ping-poll

show ping-poll

timeout (ping polling)

up-count

# show counter ping-poll

**Overview** This command displays the counters for ping polling.

**Syntax** `show counter ping-poll [<1-100>]`

| Parameter | Description |
|---|---|
| *<1-100>* | A unique ping poll ID number. This displays the counters for the specified ping poll only. If you do not specify a ping poll, then this command displays counters for all ping polls. |

**Mode** User Exec and Privileged Exec

**Output** Figure 62-1: Example output from the **show counter ping-poll** command

```
Ping-polling counters
Ping-poll: 1
PingsSent              ......... 15
PingsFailedUpState     ......... 0
PingsFailedDownState   ......... 0
ErrorSendingPing       ......... 2
CurrentUpCount         ......... 13
CurrentFailCount       ......... 0
UpStateEntered         ......... 0
DownStateEntered       ......... 0

Ping-poll: 2
PingsSent              ......... 15
PingsFailedUpState     ......... 0
PingsFailedDownState   ......... 0
ErrorSendingPing       ......... 2
CurrentUpCount         ......... 13
CurrentFailCount       ......... 0
UpStateEntered         ......... 0
DownStateEntered       ......... 0

Ping-poll: 5
PingsSent              ......... 13
PingsFailedUpState     ......... 0
PingsFailedDownState   ......... 2
ErrorSendingPing       ......... 2
CurrentUpCount         ......... 9
CurrentFailCount       ......... 0
UpStateEntered         ......... 0
DownStateEntered       ......... 0
```

**Table 63:** Parameters in output of the **show counter ping-poll** command

| Parameter | Description |
|---|---|
| `Ping-poll` | The ID number of the polling instance. |
| `PingsSent` | The total number of pings generated by the polling instance. |
| `PingsFailedUpState` | The number of unanswered pings while the target device is in the Up state. This is a cumulative counter for multiple occurrences of the Up state. |
| `PingsFailedDownState` | Number of unanswered pings while the target device is in the Down state. This is a cumulative counter for multiple occurrences of the Down state. |
| `ErrorSendingPing` | The number of pings that were not successfully sent to the target device.<br>This error can occur when your device does not have a route to the destination. |
| `CurrentUpCount` | The current number of sequential ping replies. |
| `CurrentFailCount` | The number of ping requests that have not received a ping reply in the current sample-size window. |
| `UpStateEntered` | Number of times the target device has entered the Up state. |
| `DownStateEntered` | Number of times the target device has entered the Down state. |

**Example**

To display counters for the polling instances, use the command:

```
awplus# show counter ping-poll
```

**Related commands**

debug ping-poll

ping-poll

show ping-poll

# show ping-poll

**Overview** This command displays the settings and status of ping polls.

**Syntax** `show ping-poll [<1-100>|state {up|down}] [brief]`

| Parameter | Description | |
|---|---|---|
| *<1-100>* | Displays settings and status for the specified polling instance. | |
| `state` | Displays polling instances based on whether the device they are polling is currently reachable or unreachable. | |
| | `up` | Displays polling instance where the device state is reachable. |
| | `down` | Displays polling instances where the device state is unreachable. |
| `brief` | Displays a summary of the state of ping polls, and the devices they are polling. | |

**Mode** User Exec and Privileged Exec

**Output** Figure 62-2: Example output from the **show ping-poll brief** command

```
Ping Poll Configuration
---------------------------------------------------------
Id Enabled State Destination
---------------------------------------------------------
1  Yes     Down  192.168.0.1
2  Yes     Up    192.168.0.100
```

**Table 64:** Parameters in output of the **show ping-poll brief** command

| Parameter | Meaning |
|---|---|
| Id | The ID number of the polling instance, set when creating the polling instance with the ping-poll command. |
| Enabled | Whether the polling instance is enabled or disabled. |

**Table 64:** Parameters in output of the **show ping-poll brief** command (cont.)

| Parameter | Meaning | |
|---|---|---|
| State | The current status of the device being polled: | |
| | Up | The device is reachable. |
| | Down | The device is unreachable. |
| | Critical Up | The device is reachable but recently the polling instance has not received some ping replies, so the polled device may be going down. |
| | Critical Down | The device is unreachable but the polling instance received a reply to the last ping packet, so the polled device may be coming back up. |
| Destination | The IP address of the polled device, set with the ip (ping-polling) command. | |

Figure 62-3: Example output from the **show ping-poll** command

```
Ping Poll Configuration
-------------------------------------------------------------

Poll 1:
Description                          : Primary Gateway
Destination IP address               : 192.168.0.1
Status                               : Down
Enabled                              : Yes
Source IP address                    : 192.168.0.10
Critical interval                    : 1
Normal interval                      : 30
Fail count                           : 10
Up count                             : 5
Sample size                          : 50
Length                               : 32
Timeout                              : 1
Debugging                            : Enabled
```

```
Poll 2:
Description                          : Secondary Gateway
Destination IP address               : 192.168.0.100
Status                               : Up
Enabled                              : Yes
Source IP address                    : Default
Critical interval                    : 5
Normal interval                      : 60
Fail count                           : 20
Up count                             : 30
Sample size                          : 100
Length                               : 56
Timeout                              : 2
Debugging                            : Enabled
```

**Table 65:** Parameters in output of the **show ping-poll** command

| Parameter | Description | |
|---|---|---|
| Description | Optional description set for the polling instance with the description (ping-polling) command. | |
| Destination IP address | The IP address of the polled device, set with the ip (ping-polling) command. | |
| Status | The current status of the device being polled: | |
| | Up | The device is reachable. |
| | Down | The device is unreachable. |
| | Critical Up | The device is reachable but recently the polling instance has not received some ping replies, so the polled device may be going down. |
| | Critical Down | The device is unreachable but the polling instance received a reply to the last ping packet, so the polled device may be coming back up. |
| Enabled | Whether the polling instance is enabled or disabled. The active (ping-polling) and active (ping-polling) commands enable and disable a polling instance. | |
| Source IP address | The source IP address sent in the ping packets. This is set using the source-ip command. | |
| Critical interval | The time period in seconds between pings when the polling instance has not received a reply to at least one ping, and when the device is unreachable. This is set with the critical-interval command. | |
| Normal interval | The time period between pings when the device is reachable. This is set with the normal-interval command. | |

**Table 65:** Parameters in output of the **show ping-poll** command (cont.)

| Parameter | Description |
|---|---|
| `Fail count` | The number of pings that must be unanswered, within the total number of pings specified by the sample-size command, for the polling instance to consider the device unreachable. This is set using the fail-count command. |
| `Up count` | The number of consecutive pings that the polling instance must receive a reply to before classifying the device reachable again. This is set using the up-count command. |
| `Sample size` | The total number of pings that the polling instance inspects when determining whether a device is unreachable. This is set using the sample-size command. |
| `Length` | The number of data bytes to include in the data portion of the ping packet. This is set using the length (ping-poll data) command. |
| `Timeout` | The time in seconds that the polling instance waits for a response to a ping packet. This is set using the timeout (ping polling) command. |
| `Debugging` | Indicates whether ping polling debugging is **Enabled** or **Disabled**.<br>This is set using the debug ping-poll command. |

## Examples

To display the ping poll settings and the status of all the polls, use the command:

```
awplus# show ping-poll
```

To display a summary of the ping poll settings, use the command:

```
awplus# show ping-poll brief
```

To display the settings for ping poll 6, use the command:

```
awplus# show ping-poll 6
```

To display a summary of the state of ping poll 6, use the command:

```
awplus# show ping-poll 6 brief
```

To display the settings of ping polls that have reachable devices, use the command:

```
awplus# show ping-poll state up
```

To display a summary of ping polls that have unreachable devices, use the command:

```
awplus# show ping-poll state down brief
```

## Related commands

debug ping-poll

ping-poll

# source-ip

**Overview** This command specifies the source IP address to use in ping packets.

By default, the polling instance uses the address of the interface through which it transmits the ping packets. It uses the device's local interface IP address when it is set. Otherwise, the IP address of the interface through which it transmits the ping packets is used.

The **no** variant of this command resets the source IP in the packets to the device's local interface IP address.

**Syntax**

```
source-ip {<ip-address>|<ipv6-address>}
no source-ip
```

| Parameter | Description |
|---|---|
| *<ip-address>* | An IPv4 address in dotted decimal notation `A.B.C.D` |
| *<ipv6-address>* | An IPv6 address in hexadecimal notation `X:X::X:X` |

**Mode** Ping-Polling Configuration

**Examples** To configure the ping-polling instance 43 to use the source IP address `192.168.0.1` in ping packets, use the commands:

```
awplus# configure terminal
awplus(config)# ping-poll 43
awplus(config-ping-poll)# source-ip 192.168.0.1
```

To configure the ping-polling instance 43 to use the source IPv6 address `2001:db8::` in ping packets, use the commands:

```
awplus# configure terminal
awplus(config)# ping-poll 43
awplus(config-ping-poll)# source-ip 2001:db8::
```

To reset the source IP address to the device's local interface IP address for ping-poll instance 43, use the commands:

```
awplus# configure terminal
awplus(config)# ping-poll 43
awplus(config-ping-poll)# no source-ip
```

**Related commands**

description (ping-polling)

ip (ping-polling)

length (ping-poll data)

ping-poll

show ping-poll

# timeout (ping polling)

**Overview**

This command specifies the time in seconds that the polling instance waits for a response to a ping packet. You may find a higher time-out useful in networks where ping packets have a low priority.

The **no** variant of this command resets the set time out to the default of one second.

**Syntax**

```
timeout <1-30>
no timeout
```

| Parameter | Description |
|---|---|
| *<1-30>* | Length of time, in seconds, that the polling instance waits for a response from the polled device. |

**Default**

The default is 1 second.

**Mode**

Ping-Polling Configuration

**Examples**

To specify the timeout as 5 seconds for ping-poll instance 43, use the commands:

```
awplus# configure terminal
awplus(config)# ping-poll 43
awplus(config-ping-poll)# timeout 5
```

To reset the timeout to its default of 1 second for ping-poll instance 43, use the commands:

```
awplus# configure terminal
awplus(config)# ping-poll 43
awplus(config-ping-poll)# no timeout
```

**Related commands**

critical-interval

fail-count

normal-interval

ping-poll

sample-size

show ping-poll

up-count

# up-count

**Overview** This command sets the number of consecutive pings that the polling instance must receive a reply to before classifying the device reachable again.

The **no** variant of this command resets the up count to the default of 30.

**Syntax**

```
up-count <1-100>
no up-count
```

| Parameter | Description |
|---|---|
| *<1-100>* | Number of replied pings before an unreachable device is classified as reachable. |

**Default** The default is 30.

**Mode** Ping-Polling Configuration

**Examples** To set the upcount to 5 consecutive pings for ping-polling instance 45, use the commands:

```
awplus# configure terminal
awplus(config)# ping-poll 45
awplus(config-ping-poll)# up-count 5
```

To reset the upcount to the default value of 30 consecutive pings for ping-polling instance 45, use the commands:

```
awplus# configure terminal
awplus(config)# ping-poll 45
awplus(config-ping-poll)# no up-count
```

**Related commands**

critical-interval

fail-count

normal-interval

ping-poll

sample-size

show ping-poll

timeout (ping polling)

# undebug ping-poll

**Overview** This command applies the functionality of the no debug ping-poll command.

# Part 8: Firewall and Network Address Translation (NAT)

# 63 Firewall Commands

## Introduction

**Overview** This chapter provides an alphabetical reference of commands used to configure AlliedWare Plus Firewall. For more information see the Firewall_and Network Address Translation (NAT) Feature Overview and Configuration_Guide.

The table below lists the firewall commands and their applicable modes.

Figure 63-1: Firewall commands and applicable modes

| Mode | Command |
|---|---|
| Privileged Exec | clear firewall connections |
| | debug firewall |
| | show debugging firewall |
| | show firewall |
| | show firewall connections |
| | show firewall rule |
| | show firewall rule config-check |
| | show running-config firewall |
| Global Configuration | firewall |
| Firewall Configuration | protect (firewall) |
| | rule (firewall) |
| | move rule (firewall) |

**Command List**


- "clear firewall connections" on page 3245
- "connection-limit (firewall)" on page 3246
- "connection-log events" on page 3248

- "firewall" on page 3249
- "debug firewall" on page 3250
- "ip tcp timeout established" on page 3251
- "move rule (firewall)" on page 3252
- "protect (firewall)" on page 3253
- "rule (firewall)" on page 3254
- "show connection-log events" on page 3256
- "show firewall" on page 3257
- "show firewall connections" on page 3258
- "show firewall connections limits" on page 3259
- "show firewall connections limits config-check" on page 3260
- "show firewall rule" on page 3261
- "show firewall rule config-check" on page 3263
- "show debugging firewall" on page 3264
- "show running-config firewall" on page 3265

# clear firewall connections

**Overview** Use this command to clear firewall connections.

**Syntax**

```
clear firewall connections
```

**Mode** Privileged Exec

**Usage notes** Removing the Network Address Translation (NAT) rule by using the **no nat rule** command for an actively translated flow does not stop translating immediately. This means subsequent packets in the flow are continued to be translated.

The continued translation after associated NAT rule is removed will only stop when:

- You use the **clear firewall connections** command to manually stop translations immediately, when the associated rule has been deleted regardless whether the firewall feature is actually configured with NAT or not.
- The traffic flow ends naturally, for example, when it is stopped from the source. If the flow is re-initiated from a host, it will not be translated by the firewall, as the rule is deleted after the first flow stopped.

**Examples** To clear firewall connections, use the command:

```
awplus# clear firewall connections
```

**Validation commands** show firewall connections

**Related commands** rule (nat)

# connection-limit (firewall)

**Overview**

Use this command to limit firewall connections for an entity. The limit imposed by a connection-limit rule applies to the sum of TCP and UDP flows that match the rule.

Use the **no** variant of this command to remove the limit.

**Syntax**

```
connection-limit [<1-65535>] from <entity-name> with limit
<0-100000>
```

```
no connection-limit {<1-65535>|all}
```

| Parameter | Description |
|---|---|
| *<1-65535>* | Unique numeric identifier for the limit. |
| *<entity-name>* | An entity represents a logical grouping of subnets, hosts or interfaces. For more information about entity, see the Application and Entity Commands. |
| *<0-100000>* | The maximum number of permitted connections for the entity. |
| `all` | Delete all limits. |

**Default**

The limiting is disabled by default and the number of connections will not be limited. However, the number is up to the maximum total number of allowed connections.

**Mode**

Firewall Configuration

**Usage notes**

This command allows you to limit the number of firewall sessions associated with a specific entity. The limit will be applied to each host on that entity. This means connection limits applied to an entity with multiple addresses will apply the limit to individual hosts, not the total connections for the entity. The limit applies to both IPv4 and IPv6.

If a connection limit rule is removed, any running connections are not stopped. Changes to limits only affect new connections. Adding a lower limit will not affect existing connections.

**Examples**

To set a connection limit for entity DMZ, use the following command:

```
awplus(config-firewall)# connection-limit 1 from DMZ with limit
10000
```

To remove the connection limit, use the following command:

```
awplus(config-firewall)# no connection-limit 1
```

**Validation commands**

show firewall connections

show firewall connections limits

**Command changes** Version 5.5.0-1.1: Firewall session limiting rules apply to UDP connections, where previously the limiting rules only applied to TCP connections.

# connection-log events

**Overview**

Use this command to enable extra logging for indicating the start and the end of connections passing through the firewall.

Use the **no** variant of this command to turn off the extra logging of connections passing through the firewall.

**Syntax**

```
connection-log events [new|end|all]
no connection-log events [new|end|all]
```

| Parameter | Description |
|---|---|
| new | New connection |
| end | Connections closed |
| all | All new connections and connections closed. Default. |

**Default**

Connection logging is not enabled by default.

**Mode**

Global Configuration.

**Usage notes**

There are two types of messages you can log: new connections and connections that ended. You can control the amount of messages you log by choosing to log either type of message or all of the message types.

Messages contain the following information:

- time
- source and destination addresses (NATed and unNATed)
- protocol
- source and destination ports (NATed and unNATed)
- bytes and packets passed (found in the connection end message)

**Example**

To log all of the new connections and all of the closed connections, use the commands:

```
awplus# configure terminal
awplus(config)# connection-log events all
```

**Related commands**

show connection-log events

**Command changes**

Version 5.4.7-1.1: command added.

# firewall

**Overview**

Use this command to configure the firewall.

Use the **no** variant of this command to remove all firewall configuration.

**Syntax**

```
firewall
no firewall
```

**Mode**

Global Configuration

**Usage notes**

This command allows you to enter the Firewall Configuration mode. The command prompt for this mode is **awplus(config-firewall)#**

In the Firewall Configuration mode, you can:

- Enable or disable firewall protection, see the protect (firewall) command.
- Create, move, or delete rules for the firewall, see the rule (firewall) command and the move rule (firewall) command.

**Examples**

To configure the firewall, use the commands:

```
awplus# configure terminal
awplus(config)# firewall
awplus(config-firewall)#
```

To remove all firewall configuration, use the commands:

```
awplus# configure terminal
awplus(config)# no firewall
```

**Validation commands**

show firewall

show running-config firewall

# debug firewall

**Overview**

Use this command to enable firewall debugging and Network Address Translation (NAT) debugging. This will cause additional detailed debugging information to be logged at the "informational" and "debugging" levels.

Use the **no** variant of this command to disable firewall debugging and NAT debugging.

For more information about NAT, see the Firewall_and Network Address Translation (NAT) Feature Overview and Configuration_Guide.

**Syntax**

```
debug firewall
no debug firewall
```

**Default**

Firewall debugging and NAT debugging are disabled by default.

**Mode**

Privileged Exec

**Examples**

To enable firewall debugging and NAT debugging, use the command:

```
awplus# debug firewall
```

To disable firewall debugging and NAT debugging, use the command:

```
awplus# no debug firewall
```

**Validation commands**

show debugging firewall

# ip tcp timeout established

**Overview**

Use this command to set the idle timeout for all established TCP connections.

Use the **no** variant of this command to set the idle timeout back to the default of 3600 seconds.

**Syntax**

```
ip tcp timeout established <1-31536000>
no ip tcp timeout established
```

| Parameter | Description |
|---|---|
| *<1-31536000>* | Idle timeout for established TCP connections in seconds from 1 to 3153600. |

**Default**

3600 seconds (1 hour)

**Mode**

Global Configuration

**Usage notes**

By default, when a TCP session is successfully established through the firewall, when the session goes idle, it automatically times out of the firewall connection tracking table after 3600 seconds. In some situations it may be beneficial to time out unused established TCP sessions earlier.

For example, in a busy environment where there is an excessive number of sessions being established, the firewall connection tracking table could become oversubscribed, with new connections being blocked until older sessions are timed out.

**Example**

To set a non-default TCP session timeout for established idle sessions of 1800 seconds (30 minutes), use the commands:

```
awplus# configure terminal
awplus(config)# ip tcp timeout established 1800
```

**Example**

To set the TCP session timeout for established idle sessions back to the default setting of 3600 seconds, use the commands:

```
awplus# configure terminal
awplus(config)# no ip tcp timeout established
```

**Related commands**

show running-config

**Command changes**

Version 5.4.6-1.1: command added

# move rule (firewall)

**Overview**

Use this command to change the order of firewall rules.

Firewall rules are applied in rule ID order. When rules match the same application, source entity and destination entity, only the rule with the lowest ID is applied.

Note that you can move an existing rule ID only to an ID that is not assigned to any rule; otherwise you will be given an error message. Also note that a change to the rule order may change the rule results.

**Syntax**

`move rule <1-65535> to <1-65535>`

| Parameter | Description |
|---|---|
| `move rule <1-65535>` | Move the ID of a given rule. The rule ID of the given rule must exist.<br>Each rule has an ID which is either designated by the user or automatically generated when the rule is created. The rule ID is an integer from 1 to 65535. |
| `to <1-65535>` | New rule ID to assign. The new rule ID must not be used by any existing rule. |

**Mode**

Firewall Configuration

**Examples**

To change the rule ID from `20` to `10`, use the commands:

```
awplus# configure terminal
awplus(config)# firewall
awplus(config-firewall)# move rule 20 to 10
```

**Validation commands**

show firewall rule

show running-config firewall

**Related commands**

rule (firewall)

# protect (firewall)

**Overview**

Use this command to enable firewall protection.

Use the **no** variant of this command to disable firewall protection without losing the existing firewall configuration.

**Syntax**

```
protect
no protect
```

**Default**

Firewall protection is disabled by default.

**Mode**

Firewall Configuration

**Usage notes**

Firewall protection is disabled by default and all traffic can pass through the firewall. When the firewall is enabled and no rules are added, all traffic will be blocked by default. You can use the rule (firewall) command to configure rules to allow traffic to pass through the firewall.

**Examples**

To enable firewall protection, use the commands:

```
awplus# configure terminal
awplus(config)# firewall
awplus(config-firewall)# protect
```

To disable firewall protection, use the commands:

```
awplus# configure terminal
awplus(config)# firewall
awplus(config-firewall)# no protect
```

**Validation commands**

show firewall

show running-config firewall

# rule (firewall)

**Overview** Use this command to create a rule for the firewall. Firewall security policy is specified in the form of firewall rules. Each rule defines the appropriate processing of a type of traffic passing through the firewall.

Use the **no** variant of this command to remove a rule.

**Syntax**

```
rule [<1-65535>] {permit|deny|reject|log} <application-name>
from <source-entity> to <destination-entity>
[no-state-enforcement] [log]
```

```
no rule {<1-65535>|all}
```

| Parameter | Description |
|---|---|
| *<1-65535>* | Rule ID is an integer in the range <1-65535>. If you don't designate a rule ID, a rule ID will be automatically generated and it will be greater than the current highest rule ID. |
| `permit` | Permit connections that match the application, source entity and destination entity specified with this command. |
| `deny` | Drop connections that match the application, source entity and destination entity specified with this command. No error message is sent back to the source host. |
| `reject` | Reject connections that match the application, source entity and destination entity specified with this command. An error message (for instance, a TCP reset for a rejected TCP connection, or a destination unreachable message for an ICMP connection, etc.) is sent back to the source host. |
| `log` | When 'log' is the action for the rule, log an event each time the rule is hit. The traffic will also be processed by subsequent firewall rules which may permit, deny or reject the connection. |
| *<application-name>* | Application name. You can either specify an application name or use the word `any`, which stands for all applications. For more information about applications, see Application and Entity Commands. |
| *<source-entity>* | Source entity name. An entity represents a logical grouping of subnets, hosts or interfaces. For more information about entities, see Application and Entity Commands. |
| *<destination-entity>* | Destination entity name. |

| Parameter | Description |
|---|---|
| `no-state-enforcement` | Optionally disable state enforcement for this rule. Use this option with caution as it will allow reverse path connection initiation. It should be used only when the traffic forward and reverse paths must be different and there is no alternative approach available.<br>This option is disabled by default. |
| `log` | When 'log' is appended to a rule, the action is applied and a log message is also generated each time the rule is hit. |
| `all` | Delete all rules. |

**Mode**

Firewall Configuration

**Usage notes**

When the firewall is enabled and no rules are added, all traffic is blocked by default, you can use this command to create rules for permitting packets between entities.

The rule is not valid and cannot be hit if either the application, source entity or destination entity the rule applies to is not properly configured, for example, the application does not exist or does not have a protocol configured or the entity does not exist. To configure applications and entities, see Application and Entity Commands. You can also use the show firewall rule config-check command to check rule configuration validity.

You can change the rule order by using the move rule (firewall) command.

**Examples**

To create a rule for permitting application ping between 'public' and 'private', use the command:

```
awplus(config-firewall)# rule 10 permit
ping from public to private
```

To create a rule for denying application http between 'public.wan' and 'private.lan', use the command:

```
awplus(config-firewall)# rule 20 deny
http from public.wan to private.lan
```

To create a firewall rule to permit application 'ping' between 'public' and 'dmz' entities and to log the results, use the commands:

```
awplus(config-firewall)# rule 30 permit
ping from public to dmz log
```

**Related commands**

move rule (firewall)

show firewall rule

show firewall rule config-check

**Command changes**

Version 5.4.7-0.1: **no-state-enforcement** option added.

# show connection-log events

**Overview** This command displays the configuration state (enabled or disabled) for the logging of connections passing through the firewall, as configured by the connection-log events command.

**Syntax**

```
show connection-log events
```

**Mode** User Exec

**Example** To show the logging configuration state for the connections passing through the firewall, use the command:

```
awplus# show connection-log events
```

**Output** Figure 63-2: Example output from **show connection-log events**

```
awplus#show connection-log events
Log new connection events:    Disabled
Log connection end events:    Enabled
```

**Related commands** connection-log events

**Command changes** Version 5.4.7-1.1: command added.

# show firewall

**Overview** Use this command to show the protection state of the firewall and the number of active connections being handled by the firewall.

You can use the protect (firewall) command to enable firewall protection.

**Syntax**

```
show firewall
```

**Mode** Privileged Exec

**Examples** To show the state of the firewall, use the command:

```
awplus# show firewall
```

**Output** Figure 63-3: Example output from the **show firewall** command

```
awplus#show firewall
Firewall protection is enabled
Active connections: 9
```

**Related commands** protect (firewall)

# show firewall connections

**Overview** Use this command to show the connections currently being tracked by the firewall.

**Syntax**

```
show firewall connections
```

**Mode** Privileged Exec

**Examples** To show the connections currently being tracked by the firewall, use the command:

```
awplus# show firewall connections
```

**Output** Figure 63-4: Example output from the **show firewall connections** command

```
awplus#show firewall connections
tcp ESTABLISHED src=192.168.1.2 dst=172.16.1.2 sport=58616
dport=23 packets=16
bytes=867 src=172.16.1.2 dst=172.16.1.1 sport=23 dport=58616
packets=11 bytes=636
[ASSURED]
icmpv6 src=2001:db8::2 dst=2001:db8::1 type=128 code=0 id=1416
packets=34
bytes=3536 src=2001:db8::1 dst=2001:db8::2 type=129 code=0 id=1416
packets=34
bytes=3536
tcp TIME_WAIT src=2001:db8:1::2 dst=2001:db8:2::2 sport=42532
dport=80 packets=7
bytes=597 src=2001:db8:2::2 dst=2001:db8:1::2 sport=80 dport=42532
packets=5
bytes=651 [ASSURED]
tcp TIME_WAIT src=2001:db8:1::2 dst=2001:db8:2::2 sport=48740
dport=80 packets=5
bytes=564 src=2001:db8:2::2 dst=2001:db8:1::2 sport=80 dport=48740
packets=5
bytes=594 [ASSURED]
```

**Related commands** clear firewall connections

# show firewall connections limits

**Overview** Use this command to show the configured firewall connection-limits for a given entity.

**Syntax**

```
show firewall connections limits
```

**Mode** Privileged Exec

**Examples** To show the information about all the firewall connection limits, use the command:

```
awplus# show firewall connections limits
```

**Output** Figure 63-5: Example output from the **show firewall connections limits** command

```
awplus#show firewall connections limits
ID       Entity                Limit       Hit Count
--------------------------------------------------
10       DMZ                   100         42
```

**Related commands** show firewall connections limits config-check

# show firewall connections limits config-check

**Overview** Use this command to check configuration validity of firewall connection limits.

An invalid rule will not be active and cannot be hit. This command also shows the reasons why a limit configuration is not valid.

**Syntax**

```
show firewall connections limits config-check
```

**Mode** Privileged Exec

**Usage notes** Firewall limits are applied to entities only. A limit is not valid if the source entity (zone) is not configured properly. This command checks if the entity exists at all, and if it does it also checks if the entity (zone) has a valid subnet.

**Examples** To check configuration validity of connection-limit rules, use the command:

```
awplus# show firewall connections limits
config-check
```

**Output** Figure 63-6: Example output from the **show firewall connections limits config-check** command on the console if rule configuration errors are detected. Connection-limit 10 uses an entity that exists; however no subnet has been specified. Connection-limit 20 uses an entity that doesn't exist.

```
awplus#show firewall connections limits config-check
Connection-limit 10:
  "From" entity has no subnet or host addresses
Connection-limit 20:
  "From" entity does not exist
```

**Output** Figure 63-7: Example output from the s**how firewall connections limits config-check** command if all limit rules are valid

```
awplus#show firewall connection limits config-check
All rules are valid
```

**Related commands** show firewall connections limits

# show firewall rule

**Overview** Use this command to show information about firewall rules.

**Syntax** `show firewall rule [<1-65535>]`

| Parameter | Description |
|---|---|
| *<1-65535>* | Rule ID |

**Mode** Privileged Exec

**Examples** To show information about all firewall rules, use the command:

```
awplus# show firewall rule
```

**Output** Figure 63-8: Example output from the **show firewall rule** command

```
awplus#show firewall rule

[* = Rule is not valid - see "show firewall rule config-check"]
  ID    Action  App       From            To                Hits
-----------------------------------------------------------------
  10    permit  ping      public          private           0
  20    permit  ping      public          dmz               0
  40    permit  ping      private         dmz               0
* 50    permit  voice     public          private           0
```

To show information about a specific firewall rule, use the command:

```
awplus# show firewall rule 10
```

**Output** Figure 63-9: Example output from the **show firewall rule** command

```
awplus#show firewall rule 10

[* = Rule is not valid - see "show firewall rule config-check"]
 ID    Action  App     From            To                Hits
-----------------------------------------------------------------
 10    permit  ping    public          private           0
```

| Output Parameter | Description |
|---|---|
| * | Indicates the rule is not valid and cannot be hit. See the show firewall rule config-check command. |
| Action | The rule action set by the rule (firewall) command. |
| App | Application name. |

| Output Parameter | Description |
|---|---|
| `From` | Source entity. |
| `To` | Destination entity. |
| `Hits` | The number of times the firewall rule has been hit. |

**Related commands** rule (firewall)

# show firewall rule config-check

**Overview**

Use this command to check configuration validity of firewall rules.

An invalid rule will not be active and cannot be hit. This command also shows the reasons why a rule is not valid.

**Syntax**

```
show firewall rule config-check
```

**Mode**

Privileged Exec

**Usage notes**

Firewall rules are applied to applications and entities. A rule is not valid if either the application, source entity or destination entity the rule applies to is not configured properly.

To configure applications and entities, see Application and Entity Commands.

**Examples**

To check configuration validity of firewall rules, use the command:

```
awplus# show firewall rule config-check
```

**Output**

Figure 63-10: Example output from the **show firewall rule config-check** command if rule configuration errors are detected

```
awplus#show firewall rule config-check
Rule 10:
  Application does not have a protocol configured
  "From" entity does not exist
  "To" entity has no subnet or host addresses
```

**Output**

Figure 63-11: Example output from the s**how firewall rule config-check** command if all rules are valid

```
awplus#show firewall rule config-check
All rules are valid
```

**Related commands**

rule (firewall)

show firewall rule

# show debugging firewall

**Overview**

Use this command to see what debugging is turned on for firewall and Network Address Translation (NAT).

You can use the debug firewall command to enable firewall and NAT debugging.

For more information about NAT, see the Firewall_and Network Address Translation (NAT) Feature Overview and Configuration_Guide.

**Syntax**

```
show debugging firewall
```

**Mode**

Privileged Exec

**Examples**

To show the firewall and NAT debugging status, use the command:

```
awplus# show debugging firewall
```

**Output**

Figure 63-12: Example output from the **show debugging firewall** command

```
awplus#show debugging firewall
Firewall Debugging Status: on
```

**Related commands**

debug firewall

# show running-config firewall

**Overview** Use this command to show the configuration commands that have been used to configure the firewall.

**Syntax** `show running-config firewall`

**Mode** Privileged Exec

**Examples** To show the configuration commands that have been used to configure the firewall, use the command:

```
awplus# show running-config firewall
```

**Output** Figure 63-13: Example output from the **show running-config firewall** command

```
awplus#show running-config firewall
firewall
 rule 10 permit ping from public to private
 protect
!
```

# 64 Application and Entity Commands

## Introduction

**Overview** This chapter provides an alphabetical reference of commands used to configure application and entity. For more information, see the Firewall_and Network Address Translation (NAT) Feature Overview and Configuration_Guide.

The table below lists the application commands and their applicable modes.

Figure 64-1: Application commands and applicable modes

| Mode | Command |
|---|---|
| Privileged Exec | show application |
| | show application detail |
| Global Configuration | application |
| Application Mode | protocol |
| | icmp-type |
| | icmp-code |
| | sport |
| | dport |

The table below lists the entity commands and their applicable modes.

Figure 64-2: Entity commands

| Mode | Command |
|---|---|
| Privileged Exec | show entity |
| Global Configuration | zone |
| Zone Mode | network (zone) |

| Mode | Command |
|---|---|
| Network Mode | `ip subnet` |
| | `ipv6 subnet` |
| | `host (network)` |
| Host Mode | `ip address (host)` |
| | `ipv6 address (host)` |

## Command List


- "application" on page 3268
- "dport" on page 3270
- "dscp" on page 3272
- "host (network)" on page 3274
- "icmp-code" on page 3276
- "icmp-type" on page 3278
- "ip address (host)" on page 3280
- "ip subnet" on page 3282
- "ipv6 address (host)" on page 3284
- "ipv6 subnet" on page 3286
- "network (zone)" on page 3288
- "protocol" on page 3290
- "show application" on page 3291
- "show application detail" on page 3292
- "show entity" on page 3295
- "sport" on page 3298
- "zone" on page 3300

# application

**Overview** Use this command to create or modify a custom application.

An application is a high level abstraction of application packets being transported by network traffic. Traffic matching for applications can be achieved by using several techniques, for example, matching packets to port numbers or searching for application signatures in flows of packets.

Use the **no** variant of this command to delete a custom application.

**Syntax**

```
application <application-name>
no application <application-name>
```

| Parameter | Description |
|---|---|
| *<application-name>* | Application name.<br>You can use all alphanumeric ASCII characters, and the dash (-) and underscore (_) characters. The name can be 1 to 64 characters long. The application name is case-sensitive. If you create two application names with the same spelling but one in upper case and the other one in lower case, the last overwrites the first entry. |

**Mode** Global Configuration

**Usage notes** Use this command to enter the Application Configuration mode, to create a custom application or configure an existing application. You can configure the source port, destination port, protocol, ICMP code and ICMP type for the application. An application is invalid if its protocol, source or destination are not properly configured, for example, if the application has no protocol configured, or source and destination ports are applied to protocols that are not TCP, UDP or SCTP.

There are 40 predefined applications with protocols, source and destinations ports.

You can change the protocol, source and destination ports of the predefined applications. You can only delete the predefined application when you change either its protocol, source or destination port.

Use the show application command to show all the custom and predefined applications.

**Examples** To create a custom application named 'isakmp', use the commands:

```
awplus# configure terminal
awplus(config)# application isakmp
awplus(config-application)#
```

To delete the custom application named 'isakmp', use the commands:

```
awplus# configure terminal
awplus(config)# no application isakmp
```

**Related commands**

dport

icmp-code

icmp-type

protocol

show application

sport

# dport

**Overview** Use this command to specify a destination port or port range for an application.

A port number is part of the addressing information used to identify a specific process to which a network message is to be forwarded between a sender and a receiver. For the full list of port numbers and their assignment, you can visit the Internet Assigned Numbers Authority (IANA) website at www.iana.org.

Use the **no** variant of this command to delete a port or a port range from an application. Note that the port or port range that you want to delete must match exactly the existing port or port range. You cannot remove a port range that is part of an existing port range.

**Syntax**

```
dport {<destination-port>|any|<start-range> to <end-range>}
no dport {<destination-port>|any|<start-range> to <end-range>}
```

| Parameter | Description |
|---|---|
| *<destination-port>* | The destination port number, either TCP or UDP, specified as an integer in the range <1-65535>. |
| any | Any port number in the range <1-65535>. This equals to a range of 1 to 65535. |
| *<start-range>* | Starting port number in the range <1-65535>. |
| to *<end-range>* | Ending port number in the range <1-65535> or max. |

**Mode** Application Mode

**Usage notes** You can create more than one destination port number or port range for an application.

**Examples** To specify destination port 500 for the application named isakmp, use the commands:

```
awplus# configure terminal
awplus(config)# application isakmp
awplus(config-application)# dport 500
```

To specify destination port 500 and a range of ports for the application named isakmp, use the commands:

```
awplus# configure terminal
awplus(config)# application isakmp
awplus(config-application)# dport 500
awplus(config-application)# dport 60000 to max
```

To specify the destination port any (a port number range of 1-65535) for the application named isakmp, use the commands:

```
awplus# configure terminal
awplus(config)# application isakmp
awplus(config-application)# dport any
```

To remove destination port 500 from the application named isakmp, use the commands:

```
awplus# configure terminal
awplus(config)# application isakmp
awplus(config-application)# no dport 500
```

To remove port **any** from the application isakmp, use the commands:

```
awplus# configure terminal
awplus(config)# application isakmp
awplus(config-application)# no dport 1 to 65535
```

**Related commands**

application

sport

show application

# dscp

**Overview** Use this command to specify one or more DSCP values used by an application.

Use the **no** variant of this command to remove one or more DSCP values from an application.

**Syntax**

```
dscp <dscp-list>
dscp {af11|af12|af13|af21|af22|af23|af31|af32|af33|af41|af42|af43|ef|be}
dscp {cs0|cs1|cs2|cs3|cs4|cs5|cs6|cs7}
no dscp
no dscp <dscp-list>
no dscp {af11|af12|af13|af21|af22|af23|af31|af32|af33|af41|af42|af43|ef|be}
no dscp {cs0|cs1|cs2|cs3|cs4|cs5|cs6|cs7}
```

| Parameter | Description |
|---|---|
| `<dscp-list>` | One or more DSCP values, in the range 0-63. Use spaces to separate values. |
| `af11 ... be` | One or more DSCP values specified according to the Assured Forwarding group, as defined in RFC 2597 and RFC 3260. See the table below for values. "ef" means expedited forwarding (DSCP 46) and "be" means best effort (DSCP 0). Voice traffic is typically given a value of ef. |
| `cs0 ... cs7` | One or more DSCP values specified according to the Class Selector group. This is equivalent to TOS IP precedence values, so that CS0 is equivalent to an IP precedence value of 0, CS1 is equivalent to an IP precedence value of 1, and so on. |

Table 64-1: Assured Forwarding (AF) behavior group

| | Class 1 | Class 2 | Class 3 | Class 4 |
|---|---|---|---|---|
| Low drop probability | AF11 (DSCP 10) | AF21 (DSCP 18) | AF31 (DSCP 26) | AF41 (DSCP 34) |
| Medium drop probability | AF12 (DSCP 12) | AF22 (DSCP 20) | AF32 (DSCP 28) | AF42 (DSCP 36) |
| High drop probability | AF13 (DSCP 14) | AF23 (DSCP 22) | AF33 (DSCP 30) | AF43 (DSCP 38) |

**Mode** Application Mode

**Usage notes**

You can specify only one set of DSCP values for an application. The newly specified list will replace the existing one; it will not be added to the existing one.

**Example**

To specify a DSCP of **ef** for the application named **voice**, use the commands:

```
awplus# configure terminal
awplus(config)# application voice
awplus(config-application)# dscp ef
```

To specify DSCPs of 12 and 13 for the application named **test**, use the commands:

```
awplus# configure terminal
awplus(config)# application test
awplus(config-application)# dscp 12 13
```

To remove DSCP12 from the application named **test**, use the commands:

```
awplus# configure terminal
awplus(config)# application test
awplus(config-application)# no dscp 12
```

To stop the application named **test** from using DSCP values, use the commands:

```
awplus# configure terminal
awplus(config)# application test
awplus(config-application)# no dscp
```

**Related commands**

application

show application

show application detail

# host (network)

**Overview** Use this command to add a host to a network entity or to configure an existing host.

Host is a high level abstraction of a single node in a network. This is commonly used if a particular device, for example a server, has a static IP address that needs to be specified in a firewall policy.

Use the **no** variant of this command to remove a host from a network entity.

**Syntax**

```
host <host-name>
no host <host-name>
```

| Parameter | Description |
|---|---|
| *<host-name>* | Host name.<br>You can use all alphanumeric ASCII characters, and the dash (-) and underscore (_) characters. The name can be 1 to 64 characters in long. |

**Mode** Network Mode

**Usage notes** You can create multiple hosts for a network. A host entity is identified by its parent network using the dot notation, for example, ZoneName.NetworkName.HostName.

This commands allows you to enter the Host Mode with the prompt **awplus(config- host)#**. The Host Mode enables you to configure IPv4 address and IPv6 address for the host. For more information about host IPv4 address and IPv6 address, see ip address (host) command and ipv6 address (host) command respectively.

**Example** To create a host entity named `ftp` under network entity `servers`, use the commands:

```
awplus# configure terminal
awplus(config)# zone dmz
awplus(config-zone)# network servers
awplus(config-network)# host ftp
awplus(config-host)#
```

To remove host entity `ftp` and its IP address configuration from network entity `servers`, use the commands:

```
awplus# configure terminal
awplus(config)# zone dmz
awplus(config-zone)# network servers
awplus(config-network)# no host ftp
```

**Validation commands**

show entity

**Related commands**

ip address (host)

ipv6 address (host)

network (zone)

# icmp-code

**Overview** Use this command to configure an ICMP message code for an application.

ICMP has many messages that are identified by a "type" field and many of these ICMP types have a "code" field. Use the icmp-type command to specify the ICMP type. For the full list of the ICMP code assignments, you can visit the Internet Assigned Numbers Authority (IANA) website at www.iana.org.

Use the **no** variant of this command to restore the ICMP message code to its default, which is **any**.

**Syntax**

```
icmp-code {<code-number>|any}
no icmp-code
```

| Parameter | Description |
|---|---|
| *<code-number>* | Specify an ICMP message code number in the range of 0 to 255. |
| any | Any ICMP message code in the range of 0 to 255. |

**Default** The default ICMP code number is **any**.

**Mode** Application Mode

**Usage notes** You should configure the ICMP code only for applications that use protocol ICMP. To configure the application protocol, see the protocol command.

You can specify only one ICMP message code for an application. The newly specified code will replace the previous one.

**Examples** To specify ICMP code 5 (redirect) for the application named icmp, use the commands:

```
awplus# configure terminal
awplus(config)# application icmp
awplus(config-application)# icmp-code 5
```

To specify the ICMP code as **any** for the application named icmp, use the commands:

```
awplus# configure terminal
awplus(config)# application icmp
awplus(config-application)# icmp-code any
```

To restore the ICMP message code to its default of **any** for the application named icmp, use the commands:

```
awplus# configure terminal
awplus(config)# application icmp
awplus(config-application)# no icmp-code
```

**Related commands**

application

icmp-type

protocol

show application

# icmp-type

**Overview** Use this command to configure an ICMP message type for an application.

The ICMP protocol has many messages that are identified by a "type" field. For the full list of the ICMP type assignments, you can visit the Internet Assigned Numbers Authority (IANA) website at www.iana.org.

Use the **no** variant of this command to restore the ICMP message type to its default, which is **any**.

**Syntax**

```
icmp-type {<type-number>|any}
no icmp-type
```

| Parameter | Description |
|---|---|
| *<type-number>* | Specify an ICMP message type number in the range of 0 to 255. |
| any | Any ICMP message type in the range of 0 to 255. |

**Default** The default ICMP type is **any**.

**Mode** Application Mode

**Usage notes** You should configure the ICMP type only for applications that use protocol ICMP. To configure the application protocol, see the protocol command.

You can specify only one ICMP message type for an application. The newly specified type will replace the previous one.

**Examples** To specify ICMP message type 8 (echo) for the application named icmp, use the commands:

```
awplus# configure terminal
awplus(config)# application icmp
awplus(config-application)# icmp-type 8
```

To specify the ICMP message type as **any** for the application named icmp, use the commands:

```
awplus# configure terminal
awplus(config)# application icmp
awplus(config-application)# icmp-type any
```

To restore the ICMP message type to its default of **any** for the application named icmp, use the commands:

```
awplus# configure terminal
awplus(config)# application icmp
awplus(config-application)# no icmp-type
```

**Related commands**

application

icmp-code

network (zone)

show application

# ip address (host)

**Overview** Use this command to assign an IPv4 address to a host entity.

Use the **no** variant of this command to remove an IPv4 address from the host.

**Syntax**

```
ip address <ipv4-address>
ip address dynamic fqdn <domain_name>
ip address dynamic interface <interface_name>
no ip address <ipv4-address>
no ip address dynamic fqdn <domain_name>
no ip address dynamic interface <interface_name>
```

| Parameter | Description |
|---|---|
| *<ipv4-address>* | The IPv4 address uses the format A.B.C.D. |
| dynamic | Dynamic IP address, for example, obtained from a DHCP server. |
| *<domain_name>* | The FQDN to resolve IP addresses for. |
| *<interface_name>* | Interface to acquire IP addresses from. |

**Mode** Host

**Usage notes** You can add multiple IP addresses to a host entity. If the IP address is not in the scope of any of its parent network's IPv4 subnets, a warning message will be given. Such an IP address is still acceptable because in the future the user may assign a network subnet that contains the host's IP address. Firewall policy rules will not apply to an IP address that is not in at least one of the network's subnets.

If you are adding an FQDN, DNS Relay cache and **ip domain-lookup via-relay** must be enabled for this command to work. DNS requests passing through the router are inspected for matching FQDNs. Because of this, the DNS cache is cleared when this command is entered so that the IP addresses can be picked up.

You can add multiple dynamic FQDNs for a host entity.

**Examples** To add an IP address to host `ftp`, use the commands:

```
awplus# configure terminal
awplus(config)# zone dmz
awplus(config-zone)# network servers
awplus(config-network)# ip subnet 192.168.1.0/24
awplus(config-network)# host ftp
awplus(config-host)# ip address 192.168.1.5
```

To add multiple IP addresses to host `ftp`, use the commands:

```
awplus# configure terminal
awplus(config)# zone dmz
awplus(config-zone)# network servers
awplus(config-network)# ip subnet 192.168.1.0/24
awplus(config-network)# host ftp
awplus(config-host)# ip address 192.168.1.8
awplus(config-host)# ip address 192.168.1.9
awplus(config-host)# ip address 192.168.1.10
```

To add the IPv4 addresses of the FQDN "google.com" to a zone, use the following commands:

```
awplus# configure terminal
awplus(config)# zone Public
awplus(config-zone)# network Router
awplus(config-network)# ip subnet 0.0.0.0/0
awplus(config-network)# host google
awplus(config-host)# ip address dynamic fqdn google.com
```

To remove an IP address from host `ftp`, use the commands:

```
awplus# configure terminal
awplus(config)# zone dmz
awplus(config-zone)# network servers
awplus(config-network)# host ftp
awplus(config-host)# no ip address 192.168.1.5
```

**Validation commands**

show entity

**Related commands**

host (network)

ip domain-lookup

**Command changes**

Version 5.4.8-1.1: FQDN parameter and output added

# ip subnet

**Overview** Use this command to add an IPv4 subnet to a network entity.

Use the **no** variant of this command to remove a subnet from a network entity.

**Syntax**

```
ip subnet <ip-network/m> [interface <interface-name>]
no ip subnet <ip-network/m> [interface <interface-name>]
```

| Parameter | Description |
|---|---|
| *<ip-network/m>* | IP address of the network, entered in the form A.B.C.D/M. Dotted decimal notation followed by a forward slash, and then the subnet mask length. |
| `interface` | Specify an interface name. An interface may be specified to add a further restriction on the subnet. No interface configured indicates that any matching address from any interface is a member of this network. |
| *<interface-name>* | Interface name. Any AlliedWare Plus interface type (eth, vlan, ppp, tunnel, lo and so on). A warning message is given if the interface does not match an existing interface on the device. |

**Mode** Network Mode

**Usage notes** You can create multiple subnets to a network entity.

**Examples** To add a subnet to network `servers`, use the commands:

```
awplus# configure terminal
awplus(config)# zone dmz
awplus(config-zone)# network servers
awplus(config-network)# ip subnet 192.168.2.0/24
```

To add a subnet and an interface to network `servers`, use the commands:

```
awplus# configure terminal
awplus(config)# zone dmz
awplus(config-zone)# network servers
awplus(config-network)# ip subnet 192.168.2.0/24 interface eth1
```

To add multiple subnets to network `servers`, use the commands:

```
awplus# configure terminal
awplus(config)# zone dmz
awplus(config-zone)# network servers
awplus(config-network)# ip subnet 192.168.2.0/24 interface eth1
awplus(config-network)# ip subnet 10.1.0.0/16 interface eth1
```

To remove a subnet from network `servers`, use the commands:

```
awplus# configure terminal
awplus(config)# zone dmz
awplus(config-zone)# network servers
awplus(config-network)# no ip subnet 192.168.2.0/24
```

**Validation commands** show entity

**Related commands** network (zone)

# ipv6 address (host)

**Overview** Use this command to assign an IPv6 address to a host entity.

Use the **no** variant of this command to remove an IPv6 address from an host entity.

**Syntax**

```
ipv6 address <ipv6-address>
ipv6 address dynamic fqdn <domain_name>
ipv6 address dynamic interface <interface_name>
no ipv6 address <ipv6-address>
no ipv6 address dynamic fqdn <domain_name>
no ipv6 address dynamic interface <interface_name>
```

| Parameter | Description |
|---|---|
| *<ipv6-address>* | The IPv6 address in the format x:x::x:x. |
| dynamic | Dynamic IPv6 address, for example, obtained from a DHCP server. |
| *<domain_name>* | The FQDN to resolve IP addresses for. |
| *<interface_name>* | Interface to acquire IP addresses from. |

**Mode** Host Mode

**Usage notes** You can add multiple IPv6 addresses to a host entity. If the IPv6 address is not in the scope of any of its parent network's IPv6 subnets, a warning message will be given. Such an IP address is still acceptable because in the future the user may assign a network subnet that contains the host's IPv6 address. Firewall policy rules will not apply to an IPv6 address that is not in at least one of the network's subnets.

If you are adding an FQDN, DNS Relay cache and **ip domain-lookup via-relay** must be enabled for this command to work. DNS requests passing through the router are inspected for matching FQDNs. Because of this, the DNS cache is cleared when this command is entered so that the IPv6 addresses can be picked up.

You can add multiple dynamic FQDNs for a host entity.

**Examples** To add an IPv6 address to host `web-server`, use the commands:

```
awplus# configure terminal
awplus(config)# zone dmz
awplus(config-zone)# network servers
awplus(config-network)# ipv6 subnet 2001:db8:24:100::/64
awplus(config-network)# host web-server
awplus(config-host)# ipv6 address 2001:db8:24:100::1
```

To add multiple IP addresses to host `web-server`, use the commands:

```
awplus# configure terminal
awplus(config)# zone dmz
awplus(config-zone)# network servers
awplus(config-network)# ipv6 subnet 2001:db8:24:100::/64
awplus(config-network)# host web-server
awplus(config-host)# ipv6 address 2001:db8:24:100::2
awplus(config-host)# ipv6 address 2001:db8:24:100::3
awplus(config-host)# ipv6 address 2001:db8:24:100::4
```

To add the IPv6 addresses of the FQDN "google.com" to a zone, use the following commands:

```
awplus# configure terminal
awplus(config)# zone Public
awplus(config-zone)# network Router
awplus(config-network)# ip subnet ::/0
awplus(config-network)# host google
awplus(config-host)# ip address dynamic fqdn google.com
```

To remove an IPv6 address from host `web-server`, use the commands:

```
awplus# configure terminal
awplus(config)# zone dmz
awplus(config-zone)# network servers
awplus(config-network)# host web-server
awplus(config-host)# no ipv6 address 2001:db8:24:100::2
```

**Validation commands**

show entity

**Related commands**

host (network)

ip domain-lookup

**Command changes**

Version 5.4.8-1.1: FQDN parameter and output added

# ipv6 subnet

**Overview** Use this command to assign an IPv6 subnet to a network entity.

Use the **no** variant of this command to remove a IPv6 subnet from a network entity.

**Syntax**

```
ipv6 subnet <ip-network/m> [interface <interface-name>]
no ipv6 subnet <ip-network/m> [interface <interface-name>]
```

| Parameter | Description |
|---|---|
| *<ip-network/m>* | IPv6 address of the network, entered in the form X:X::X:X/M, followed by the prefix length in slash notation. |
| `interface` | Specify an interface name. An interface may be specified to add a further restriction on the subnet. No interface configured indicates that any matching address from any interface is a member of this network. |
| *<interface-name>* | Interface name. Any AlliedWare Plus interface type (eth, vlan, ppp, tunnel, lo and so on.) followed by any character.<br>A warning message is given if the interface does not match an existing interface on the device. |

**Mode** Network Mode

**Usage notes** You can create multiple subnets for a network entity.

**Examples** To add a subnet to network `servers`, use the commands:

```
awplus# configure terminal
awplus(config)# zone dmz
awplus(config-zone)# network servers
awplus(config-network)# ipv6 subnet 2001:db8::/32
```

To add a subnet and an interface to network `servers`, use the commands:

```
awplus# configure terminal
awplus(config)# zone dmz
awplus(config-zone)# network servers
awplus(config-network)# ipv6 subnet 2001:db8::/32 interface
eth1
```

To add multiple subnets to network `servers`, use the commands:

```
awplus# configure terminal
awplus(config)# zone dmz
awplus(config-zone)# network servers
awplus(config-network)# ipv6 subnet 2001:db8::7/32 interface eth1
awplus(config-network)# ipv6 subnet 2001:db8::8/32 interface eth1
```

To remove a subnet from network `servers`, use the commands:

```
awplus# configure terminal
awplus(config)# zone dmz
awplus(config-zone)# network servers
awplus(config-network)# no ipv6 subnet 2001:db8::/32
```

**Validation commands** show entity

**Related commands** network (zone)

# network (zone)

**Overview**

Use this command to add a network to a zone entity or configure an existing network.

A network is a high level abstraction of a logical network in a zone. This consists of the IP subnets and interfaces over which it is reachable. Subnets are grouped into networks to apply a common set of rules among the subnets.

Use the **no** variant of this command to destroy a network entity.

**Syntax**

```
network <network-name>
no network <network-name>
```

| Parameter | Description |
|---|---|
| *<network-name>* | Network name.<br>You can use all alphanumeric ASCII characters, and the dash (-) and underscore (_) characters. The name can be 1 to 64 characters in long. |

**Mode**

Zone Mode

**Usage notes**

A network is a member of a zone. You can create multiple networks in a zone. A network entity is identified with its parent zone using the dot notation, for example, ZoneName.NetworkName.

This commands allows you to enter the Network Mode with the prompt **awplus(config- network)#**. In the Network Mode, you can:

- Configure subnets and interfaces for the network entity
- Create and delete host entities in the network

A network must have at least one valid network address for it to result in functioning rules using that network entity. For more information about how to add network address, see the ip subnet command and the ipv6 subnet command.

Note that if the network entity is destroyed, the subnets and hosts in the network entity will be destroyed as well.

**Example**

To create a network entity named `servers`, use the commands:

```
awplus# configure terminal
awplus(config)# zone dmz
awplus(config-zone)# network servers
awplus(config-network)#
```

To destroy a network entity named `servers`, use the commands:

```
awplus# configure terminal
awplus(config)# zone dmz
awplus(config-zone)# no network servers
```

**Validation commands**

show entity

**Related commands**

host (network)

ip subnet

ipv6 subnet

zone

# protocol

**Overview** Use this command to specify a protocol used by an application.

Protocol numbers are used to configure firewalls, routers, and proxy servers. The protocol number is in the protocol field of the IPv4 header and the next header field of IPv6 header. For the full list of the IP Protocol assignments, you can visit the Internet Assigned Numbers Authority (IANA) website at www.iana.org.

Use the **no** variant of this command to unset the protocol in an application.

**Syntax**

```
protocol {tcp|udp|icmp|ipv6-icmp|<protocol-number>}
no protocol
```

| Parameter | Description |
|---|---|
| `tcp` | Transmission Control Protocol. The protocol number is 6. |
| `udp` | User Datagram Protocol. The protocol number is 17. |
| `icmp` | Internet Control Message Protocol for Internet Protocol version 4. The protocol number is 1. |
| `ipv6-icmp` | Internet Control Message Protocol for Internet Protocol version 6. The protocol number is 58. |
| `<protocol-number>` | Protocol number in the range of 0 to 255. |

**Mode** Application Mode

**Usage notes** You can specify only one protocol for an application. The newly specified protocol will replace the previous one.

**Examples** To specify protocol udp for the application named isakmp, use the commands:

```
awplus# configure terminal
awplus(config)# application isakmp
awplus(config-application)# protocol udp
```

To unset the protocol in the application named isakmp, use the commands:

```
awplus# configure terminal
awplus(config)# application isakmp
awplus(config-application)# no protocol
```

**Related commands** application

show application

# show application

**Overview** Use this command to show the custom and predefined applications currently configured.

You can use the show application detail command to show detailed information of the applications.

**Syntax** `show application`

**Mode** Privileged Exec

**Examples** To show all applications currently configured, use the command:

```
awplus# show application
```

**Output** Figure 64-3: Example output from **show application**

```
awplus#show application
aim         cvs         dns         ftp
http        https       icq         ident
imap        imaps       irc         jabber
l2tp        ldap        lisa        msn
mysql       news        nfs-tcp     nfs-udp
ntp         openvpn     pcanywhere  udp
...
```

**Related commands** show application detail

# show application detail

**Overview** Use this command to show detailed information about applications that the device is aware of. For custom and predefined applications, the protocol, destination port, source port, ICMP code, ICMP type, DSCP and the name of the applications will be displayed.

For applications defined by DPI, a description of the application is displayed.

**Syntax** `show application detail [<name>|custom|dpi]`

| Parameter | Description |
|---|---|
| *<name>* | The name of a specific application. |
| `custom` | User-defined application. |
| `dpi` | DPI applications. For DPI applications to be displayed by this command, you must first enable DPI by using the enable (dpi) command and the provider (dpi) command. |

**Mode** Privileged Exec

**Examples** To show the information about all applications, use the command:

```
awplus# show application detail
```

**Output** To show the information about the application ping, use the command:

```
awplus# show application detail ping
```

Figure 64-4: Example output from **show application detail** for an application

```
awplus#show application detail ping
Name                Mark    Detail
-----------------------------------------------------------------
ping                -       proto=ICMP type=8 code=0
```

Figure 64-5: Example output from **show application detail** with provider **built-in**

```
area3[1]#show application detail
Name               Mark    Detail
-------------------------------------------------------------------------------
afp                0x6A    DPI: Apple Filing Protocol, formerly AppleTalk
                             (Cat=File transfer)
aim                -       proto=TCP sport=1024-65535 dport=9898
aimini             0x6C    DPI: Aimini P2P real-time communicatings
                             (Cat=Messaging)
ajp                0x94    DPI: Apache JServ Protocol (Cat=Networking)
amazon             0xBB    DPI: Amazon online shopping (Cat=Web Services)
amazonvideo        0xF9    DPI: Amazon on-demand video streaming service
                             (Cat=Streaming Media)
amqp               0xC9    DPI: Advanced Message Queuing Protocol
                             (Cat=Networking)
apple              0x95    DPI: Apple Inc website (Cat=Networking)
appleicloud        0x98    DPI: A cloud storage and cloud computing service from
                             Apple Inc (Cat=File transfer)
appleitunes        0x9A    DPI: A media streaming, broadcasting, and device
                             management application from Apple Inc
                             (Cat=Streaming Media)
applejuice         0x21    DPI: A defunct file sharing protocol (Cat=File
                             transfer)
...
```

Figure 64-6: Example output from **show application detail** with provider **procera**

```
awplus#show application detail
Name         Mark    Detail
-----------------------------------------------------------------
050plus      0x435   DPI: The traffic consists of data from
                      logging in or making calls with the 050Plus
                      application. (Cat=Messaging, Prod=2, Risk=2)
12306cn      0x292   DPI: 12306.cn is the only China Railway
                      customer  service center (Cat=Web Services,
                      Prod=4, Risk=1)
123movie     0x64D   DPI: Free movie streaming/downloading site
                      (Cat=Streaming Media, Prod=1, Risk=5)
126com       0x293   DPI: 126.com is a free webmail service of
                      Netease   (Cat=Mail, Prod=4, Risk=2)
17173        0x30B   DPI: General browsing, interaction, and game
                      play on the social gaming network 17173.com
                     (Cat=Social Networking, Prod=2, Risk=2)
1fichier     0x779   DPI: Online cloud storage. (Cat=File Transfer,
                      Prod=1, Risk=5)
...
```

Table 64-2: Parameters in the output from **show application detail**

| Parameter | Description |
|---|---|
| `Name` | Application name—the short name used when referenced from application-aware features (for instance firewall). |
| `Mark` | Application mark—the hexadecimal DPI application index representing each protocol or application. This value appears in Firewall log messages, indicating which application the packet or flow was identified as by DPI. |
| `Detail` | For custom and pre-defined applications—the IP protocol and port numbers associated with the application.<br>For DPI applications— a longer description of the application. |
| `Cat` | Category—a general and high-level category for the application. |
| `Prod` | Productivity—an index value between 1 and 5 that rates the potential for each application to improve or increase the overall productivity of network users. For instance, applications with a low productivity index (e.g. games and social networking) can be expected to have a negative impact on productivity. (Procera only) |
| `Risk` | Risks—an index value between 1 and 5 that rates the potential for each protocol or application to allow undesirable content onto your network. The higher the risk index, the greater the chance of letting in something that could be dangerous or destructive. (Procera only) |

**Related commands**

show application

**Command changes**

Version 5.4.7-2.1: More detail added to the output for DPI commands.

Version 5.4.9-1.1: Category added to output for built-in provider

# show entity

**Overview** Use this command to show entity information.

Entity is a high level abstraction of a network device, a group of networks or subnets. It is the instance that firewall policy can be applied to. There are three types of entity:

- zone
- network
- host

**Syntax** `show entity [<entity>]`

| Parameter | Description |
|---|---|
| *<entity>* | Specific entity in dot notation. |

**Mode** Privileged Exec

**Examples** To show the information about all entities, use the command:

```
awplus# show entity
```

**Output** Figure 64-7: Example output from the **show entity** command

```
awplus#show entity
Zone:        zone1
 Network:    zone1.network1
  Subnet:    1:db8:24:100::/64
  Subnet:    2001:db8:24:100::/64
  Host:      zone1.network1.host1
   Address:  2001:db8:24:100::1

Zone:        zone2
 Network:    zone2.network2
  Host:      zone2.network2.host1
```

To show information associated with the network entity `zone1.network1`, use the command:

```
awplus# show entity zone1.network1
```

**Output** Figure 64-8: Example output from the **show entity** command

```
awplus#show entity zone1.network1
Network:     zone1.network1
 Subnet:     1:db8:24:100::/64
 Subnet:     2001:db8:24:100::/64
 Host:       zone1.network1.host1
  Address:   2001:db8:24:100::1
```

To show information associated with the host entity `zone1.network1.host1`, use the command:

```
awplus# show entity zone1.network1.host1
```

**Output** Figure 64-9: Example output from the **show entity** command

```
awplus#show entity zone1.network1.host1
Host:         zone1.network1.host1
 Address:     192.168.1.5
```

When the entity is using dynamic interface addresses, this will be shown in the output:

**Output** Figure 64-10: Example output from the **show entity** command

```
awplus#show entity Public
Zone:          Public
 Network:      Public.Router
  Subnet:      0.0.0.0/0 via ppp0
  Host:        Public.Router.ppp0
   Address:    10.0.6.1 (dynamic)
```

When the entity is using dynamic FQDN addresses, this will be shown in the output:

**Output** Figure 64-11: Example output from the **show entity** command using dynamic FQDN addresses on the console

```
awplus#show entity Public
Zone:          Public
 Network:      Public.FQDNs
  Subnet:      0.0.0.0/0
  Subnet:      ::/0
  Host:        Public.FQDNs.alliedtelesis
   FQDN IPv4: alliedtelesis.com
   FQDN IPv6: alliedtelesis.com
   Address:    54.66.120.42 (dynamic)
```

```
  Host:       Public.FQDNs.facebook
   FQDN IPv4: facebook.com
   FQDN IPv6: facebook.com
   Address:   157.240.8.35 (dynamic)
   Address:   2a03:2880:f119:8083:face:b00c:0:25de (dynamic)
  Host:       Public.FQDNs.google
   FQDN IPv4: google.com
   FQDN IPv6: google.com
   Address:   216.58.196.142 (dynamic)
   Address:   2404:6800:4006:809::200e (dynamic)
  Host:       Public.FQDNs.microsoft
   FQDN IPv4: microsoft.com
   FQDN IPv6: microsoft.com
   Address:   23.96.52.53 (dynamic)
   Address:   23.100.122.175 (dynamic)
   Address:   104.40.211.35 (dynamic)
   Address:   104.43.195.251 (dynamic)
   Address:   191.239.213.197 (dynamic)
```

**Command changes**

Version 5.4.8-1.1: added output for dynamic interface and FQDN addresses.

# sport

**Overview** Use this command to specify a source port or a port range used for an application.

A port number is part of the addressing information used to identify a specific process to which a network message is to be forwarded between a sender and a receiver. For the full list of port numbers and their assignment, you can visit the Internet Assigned Numbers Authority (IANA) Web site: www.iana.org.

Use the **no** variant of this command to delete ports or port ranges from an application.

***NOTE:***

The port or port range that you want to delete must match exactly the existing port or port range. You cannot remove a port range that is part of an existing port range.

**Syntax**

```
sport {<source-port>|any|<start-range> to <end-range>}
no sport {<source-port>|any|<start-range> to <end-range>}
```

| Parameter | Description |
|---|---|
| *<source-port>* | The source port number, either TCP or UDP, specified as an integer between 1 and 65535. |
| any | Any port number in the range <1-65535>. This equals to a range of 1 to 65535. |
| *<start-range>* | Starting port number in the range <1-65535>. |
| to *<end-range>* | Ending port number in the range <1-65535> or max. |

**Mode** Application Mode

**Usage notes** You can create more than one source port number or port range for an application.

**Examples** To specify source port 500 for the application named isakmp, use the commands:

```
awplus# configure terminal
awplus(config)# application isakmp
awplus(config-application)# sport 500
```

To specify source port 500 and a range of ports for the application named isakmp, use the commands:

```
awplus# configure terminal
awplus(config)# application isakmp
awplus(config-application)# sport 500
awplus(config-application)# sport 60000 to max
```

To specify the source port **any** (a port number range of 1-65535) for the application named isakmp, use the commands:

```
awplus# configure terminal
awplus(config)# application isakmp
awplus(config-application)# sport any
```

To remove source port 500 from the application named isakmp, use the commands:

```
awplus# configure terminal
awplus(config)# application isakmp
awplus(config-application)# no sport 500
```

To remove all source ports from the application named isakmp, use the commands:

```
awplus# configure terminal
awplus(config)# application isakmp
awplus(config-application)# no sport 1 to 65535
```

**Related commands**

application

dport

show application

# zone

**Overview** Use this command to create a zone entity or configure an existing zone.

Zone is a high level abstraction for a logical grouping or segmentation of physical networks. This is the highest level of partitioning that firewall policy can be applied to. Zone establishes the security border of your networks. A zone defines a boundary where traffic is subjected to policy restrictions as it crosses to another region of your networks. The minimum zones normally implemented would be a trusted zone for the private network behind the firewall and a untrusted zone for the Internet. Other common zones are a Demilitarized Zone (DMZ) for publicly visible web servers and a Virtual Private Network (VPN) zone for remote access users or tunnels to other networks.

Use the **no** variant of this command to destroy a zone entity.

**Syntax**

```
zone <zone-name>
no zone <zone-name>
```

| Parameter | Description |
|---|---|
| *<zone-name>* | Zone name.<br>You can use all alphanumeric ASCII characters, and the dash (-) and underscore (_) characters. The name can be 1 to 64 characters long. |

**Mode** Global Configuration

**Usage notes** This command allows you to enter the Zone Mode with the prompt **awplus(config- category)#**. The Zone Mode enables you to create, configure and delete network entities. For more information about network entity, see the network (zone) command.

A zone entity must have at least one network entity for it to result in functioning rules using that zone entity. Fore more information about how to add network entities, see the network (zone) command.

Note that if the zone entity is destroyed, the networks and hosts of this zone will be destroyed as well.

**Examples** To create a zone named `private`, use the commands:

```
awplus# configure terminal
awplus(config)# zone private
awplus(config-zone)#
```

To destroy zone `private` and all its networks, subnets and hosts, use the commands:

```
awplus# configure terminal
awplus(config)# no zone private
```

**Validation commands** show entity

# 65 NAT Commands

## Introduction

**Overview** This chapter provides an alphabetical reference of commands used to configure Network Address Translation (NAT). For more information about NAT introduction and configuration example, see the Firewall_and Network Address Translation (NAT) Feature Overview and Configuration_Guide.

The following figure lists the NAT commands and their applicable modes.

Figure 65-1: NAT commands and applicable modes

| Mode | Command |
|---|---|
| Privileged Exec | show nat |
| | show nat rule |
| | show nat rule config-check |
| | show running-config nat |
| Global Configuration | nat |
| NAT Configuration | enable (nat) |
| | move rule (nat) |
| | rule (nat) |

**Command List**


- "enable (nat)" on page 3304
- "ip limited-local-proxy-arp" on page 3305
- "local-proxy-arp" on page 3307
- "move rule (nat)" on page 3308
- "nat" on page 3309
- "rule (nat)" on page 3310

- "show nat" on page 3314
- "show nat rule" on page 3315
- "show nat rule config-check" on page 3317
- "show running-config nat" on page 3318

# enable (nat)

**Overview**

Use this command to enable NAT .

Use the **no** variant of this command to disable NAT without losing existing NAT configuration.

**Syntax**

```
enable
no enable
```

**Default**

NAT is disabled by default.

**Mode**

NAT Configuration

**Examples**

To enable NAT, use the commands:

```
awplus# configure terminal
awplus(config)# nat
awplus(config-nat)# enable
```

To disable NAT, use the commands:

```
awplus# configure terminal
awplus(config)# nat
awplus(config-nat)# no enable
```

**Validation commands**

show nat

show running-config nat

# ip limited-local-proxy-arp

**Overview** Use this command to enable local proxy ARP, but only for a specified set of IP addresses. This makes the device respond to ARP requests for those IP addresses when the addresses are reachable via the interface you are configuring.

To specify the IP addresses, use the command local-proxy-arp.

Use the **no** variant of this command to disable limited local proxy ARP. This stops your device from intercepting and responding to ARP requests for the specified hosts. This allows the hosts to use MAC address resolution to communicate directly with one another.

**Syntax**

```
ip limited-local-proxy-arp
no ip limited-local-proxy-arp
```

**Default** Limited local proxy ARP is disabled by default.

**Mode** Interface Configuration

**Usage** Limited local proxy ARP supports Static NAT configurations in which the NAT configuration's public address is different to the ethernet interface's address.

On such ethernet interfaces, the device needs to respond to ARP requests for the public address so that it will receive packets targeted at that address.

Limited local proxy ARP makes this possible. It is especially useful when you have a number of 1-1 NAT configurations and each public address falls within the public interface's subnet. If you enable limited local proxy ARP on the public interface and specify suitable addresses, the device will respond to ARP requests for those addresses, as long as the addresses are routed out the interface the ARP requests are received on. The device responds with its own MAC address.

**Example** The following configuration snippet shows how to use limited local proxy ARP, if you are using NAT for an HTTP server with an address of 172.22.0.3 connected via eth1, and eth1 has an address of 172.22.0.1:

```
! Create a private zone for the HTTP server with address 172.22.200.3:
zone private
network vlan1
ip subnet 172.22.200.0/24
host http_server
ip address 172.22.200.3
!
! Create a public zone for the HTTP server with address 172.22.0.3:
zone public
network eth1
ip subnet 0.0.0.0/0 interface eth1
host http_server
ip address 172.22.0.3
!
! Create a NAT rule to map from the public to the private zone:
nat
rule 10 portfwd http from public.eth1 to public.eth1.http_server with dst
private.vlan1.http_server
enable
!
! Configure eth1. It has a different public address than the HTTP server:
interface eth1
ip limited local-proxy-arp
ip address 172.22.0.1/24
!
! Configure vlan1:
interface vlan1
ip address 172.22.200.5/24
!
! Tell the device to respond to ARPs for the HTTP server public address:
local-proxy-arp 172.22.0.3/32
```

**Related commands**

ip local-proxy-arp

local-proxy-arp

# local-proxy-arp

**Overview**

Use this command to specify an IP subnet for use with limited local proxy ARP. When limited local proxy ARP is enabled with the command ip limited-local-proxy-arp, the device will respond to ARP requests for addresses in that subnet.

Use the **no** variant of this command to stop specifying a subnet for use with limited local proxy ARP.

**Syntax**

```
local-proxy-arp [<ip-add/mask>]
no local-proxy-arp [<ip-add/mask>]
```

| Parameter | Description |
|---|---|
| *<ip-add/mask>* | The IP subnet to use with limited local proxy ARP, in dotted decimal format (A.B.C.D/M). To specify a single IP address, use a 32-bit mask. |

**Default**

No subnets are specified for use with limited local proxy ARP.

**Mode**

Global Configuration

**Example**

To specify limited local proxy ARP for the address 172.22.0.3, use the following commands:

```
awplus# configure terminal
awplus(config)# local-proxy-arp 172.22.0.3/32
```

This is part of a configuration snippet that shows how to use limited local proxy ARP with static NAT. See the command ip limited-local-proxy-arp for the whole example.

**Related commands**

ip limited-local-proxy-arp

# move rule (nat)

**Overview** Use this command to change the order of a NAT rule.

You can move an existing rule ID only to an ID that is not assigned to any rule, otherwise you will receive an error message.

**Syntax**

```
move rule <1-65535> to <1-65535>
```

| Parameter | Description |
|---|---|
| `move rule <1-65535>` | Move the order of a given rule. The rule ID of the given rule must exist.<br>Each rule has an ID which is either designated by the user or automatically generated when the rule is created. The rule ID is an integer from 1 to 65535. |
| `to <1-65535>` | New rule ID to assign. The new rule ID must not be used by any existing rule. |

**Mode** NAT Configuration

**Examples** To change the ID of a rule from `10` to `30`, use the commands:

```
awplus# configure terminal
awplus(config)# nat
awplus(config-nat)# move rule 10 to 30
```

**Validation commands** show nat rule

show running-config nat

**Related commands** rule (nat)

# nat

**Overview**

Use this command to configure NAT.

Use the **no** variant of this command to remove all NAT configuration.

**Syntax**

```
nat
no nat
```

**Mode**

Global Configuration

**Usage notes**

This command allows you to enter the NAT Configuration mode. The command prompt for this mode is **awplus(config-nat)#**.

In the NAT Configuration mode, you can:

- Enable NAT, see the enable (nat) command.
- Create NAT rules or change the order of NAT rules, see the rule (nat) command and the move rule (nat) command.

**Examples**

To configure NAT, use the commands:

```
awplus# configure terminal
awplus(config)# nat
awplus(config-nat)#
```

To remove all NAT configuration, use the commands:

```
awplus# configure terminal
awplus(config)# no nat
```

**Validation commands**

show nat

# rule (nat)

**Overview** Use this command to create a NAT rule.

Use the **no** variant of this command to remove a specified rule or all rules.

**Syntax**

```
rule [<1-65535>] masq <application-name> from <source-entity>
to <destination-entity> [with src <source-host-entity>]
```

```
rule [<1-65535>] portfw <application-name> from <source-entity>
[to <destination-entity>] with dst <destination-host-entity>
[dport <1-65535>]
```

```
rule [<1-65535>] netmap <application-name> from
<source-subnet-entity> to <destination-subnet-entity> with
{src|dst} <translated-subnet-entity>
```

```
no rule {<1-65535>|all}
```

| Parameter | Description |
|---|---|
| *<1-65535>* | Rule ID is an integer in the range 1 to 65535. If you do not designate a rule ID, a rule ID will be automatically generated and it will be greater than the current highest rule ID. |
| `masq` | The type of NAT rule. NAT with IP Masquerade is a case where all or a range of addresses are mapped to a single address with source port translation to identify the association. This single address masquerades as the public source address for the private addresses. |
| `portfw` | The type of NAT rule. Port forwarding allows remote hosts to connect to a specific host or service within a private LAN. This will forward IPv4 packets on to another device, for example, forward HTTP traffic to an internal web server. |
| `netmap` | The type of NAT rule. Use subnet-based NAT to translate the subnet portion of IP addresses while leaving the host portion unchanged. |
| *<application-name>* | In all NAT rules, the application name, either one of the predefined applications or an application defined by using the **application** command. |

| Parameter | Description |
|---|---|
| *<source-entity>* | Source entity name. An entity represents a logical grouping of subnets, hosts or interfaces, created by the **zone**, **network (Entity)**, or **host (Entity)** commands.<br>In a **masq** rule, the source entity defines the private side of the router. You assign private IP addresses (RFC 1918) to hosts on the private side of the router. When those hosts send traffic, the router translates the private addresses to one or more publicly valid addresses before routing the traffic. When the router receives traffic that is destined for those hosts, it translates the public addresses back to the appropriate private addresses.<br>In a **portfw** rule, the source entity may be an entity outside your private network. |
| *<destination-entity>* | The destination entity name.<br>The destination entity defines the pool of public-valid IP addresses. It can be a zone (created by the **zone** command), network (**network (Entity)** command) or host (**host (Entity)** command). |
| *<source-host-entity>* | In a **masq** rule, the specific source host address that the traffic will masquerade as.The source -host-entity must be a host with one IP address, created by using the **host (Entity)** command. |
| *<destination-host-entity>* | In a **portfw** rule, the target entity name of the specific destination host that the traffic will be port-forwarded to. The target entity must be a host with one IP address, created by using the **host (Entity)** command. |
| `dport <1-65535>` | In a **portfw** rule, modify the destination port to the specified port. (Only for protocols that have ports.) |
| *<source-subnet-entity>* | The source entity that the netmap rule will apply to, for instance a network created by the **network (Entity)** command. When the **with src** parameter is used, this source-subnet-entity is translated to the <translated-subnet-entity> specified. |
| *<destination-subnet-entity>* | The destination entity that the **netmap** rule applies to, for instance a network created by the **network (Entity)** command. When the **with dst** parameter is used, this destination subnet is translated to the <translated-subnet-entity> specified. |

| Parameter | Description |
|---|---|
| `<translated-subnet-entity>` | In a **netmap** rule:<br>**with src**: Modify the source-subnet-entity to the specified translated-subnet-entity, for instance a network created by the **network (Entity)** command. Both network entities must contain one subnet with a matching subnet mask.<br>**with dst**: Modify the destination-subnet-entity to the specified translated-subnet-entity, for instance a network created by the **network (Entity)** command. Both network entities must contain one subnet with a matching subnet mask. |
| `all` | Remove all rules. |

**Mode** NAT Configuration

**Usage notes** You can change the rule order by using the move rule (nat) command.

Firewall is used in conjunction with NAT. Port forwarding (**portfw**) and masquerade (**masq**) rules do not implicitly permit packets. **Portfw** rules (actions) are applied before any other firewall and **masq** rules (actions) are applied after any other firewall rules. When firewall protection is enabled, all traffic is blocked by default. Use the rule (firewall) command to configure firewall rules which allow the same application, source and destination entities you configure for the NAT rules.

Netmap **dst** rules are applied to traffic before it reaches the firewall rules, and netmap **src** rules are applied after the firewall has permitted the traffic. Firewall rules must be written to permit the traffic after it has been translated by the netmap **dst** rules.

Entities should have valid interfaces on which inbound and outbound traffic can be properly translated. You can use the ip subnet command and the ipv6 subnet command to configure the interfaces.

Removing a NAT rule for an actively translated flow does not stop it translating immediately. This means subsequent packets in the flow continue to be translated.

The continued translation after the associated NAT rule is removed will only stop when:

- The clear firewall connections command is executed or the flow stops.
- One of the following actions occurs:
  - You can use the clear firewall connections command to manually stop translations immediately, when the associated rule has been deleted regardless whether the firewall feature is actually configured with NAT or not.
  - The NAT rule is cleared when the traffic flow ends naturally, for example, stopped from the source. If the flow is re-initiated from a host, it will not be translated by the firewall, as the rule is deleted after the first flow stopped.

**Examples**

To perform network address translation and port forward application 'http' from entity 'public' to any with target destination dmz.servers.web_server, use the commands:

```
awplus# configure terminal
awplus(config)# nat
awplus(config-nat)# rule 10 portfw
http from public with dst dmz.servers.web_server
```

To perform network address translation and masquerade application 'http' from entity 'private' to 'public', use the commands:

```
awplus# configure terminal
awplus(config)# nat
awplus(config-nat)# rule 20 masq
http from private to public
```

To use subnet-based NAT to translate the source address of all traffic from 'private.lan' going to 'remote.lan' with the new subnet specified in 'private.global', use the commands:

```
awplus# configure terminal
awplus(config)# nat
awplus(config-nat)# rule 30 netmap all from private.lan to
remote.lan with src private.global
```

To remove NAT rule 10, use the command:

```
awplus(config-nat)# no rule 10
```

**Related commands**

application

clear firewall connections

host (network)

move rule (nat)

nat

network (zone)

show nat rule

show nat rule config-check

show running-config nat

zone

**Command changes**

Version 5.4.7-0.1: **netmap** option added.

# show nat

**Overview** Use this command to show the configuration state of NAT.

**Syntax** `show nat`

**Mode** Privileged Exec

**Examples** To show the configuration state of NAT, use the commands:

```
awplus# show nat
```

**Output** Figure 65-2: Example output from the **show nat** command

```
awplus#show nat
NAT is enabled
```

**Related commands** enable (nat)

# show nat rule

**Overview** Use this command to show information about NAT rules.

**Syntax** `show nat rule [<1-65535>]`

| Parameter | Description |
|---|---|
| *<1-65535>* | Rule ID |

**Mode** Privileged Exec

**Examples** To show information about all NAT rules, use the command:

```
awplus# show nat rule
```

**Output** Figure 65-3: Example output from the **show nat rule** command

```
awplus#show nat rule

[* = Rule is not valid - see "show nat rule config-check"]
  ID     Action  App        From      To        With       Hits
----------------------------------------------------------------
* 30     masq    any        private   public    -          0
  10     portfw  http       public    -         dmz.a.b    0
```

To show information about a specific NAT rule, use the command:

```
awplus# show nat rule 10
```

**Output** Figure 65-4: Example output from the **show nat rule** command

```
awplus#show nat rule 10

[* = Rule is not valid - see "show nat rule config-check"]
  ID     Action  App        From      To        With       Hits
----------------------------------------------------------------
  10     portfw  http       public    -         dmz.a.b    0
```

| Output Parameter | Description |
|---|---|
| * | Indicates the rule is not valid and cannot be hit, see the show nat rule config-check command. |
| App | Application name. |
| From | Source entity. |

| Output Parameter | Description |
|---|---|
| `with` | Target entity name. |
| `To` | Destination entity. |
| `Hits` | The number of times the NAT rule has been hit. |

**Related commands**

rule (nat)

show nat rule config-check

# show nat rule config-check

**Overview** Use this command to check configuration validity of NAT rules.

An invalid rule will not be active and cannot be hit.

This command also shows the reasons why a rule is not valid.

**Syntax** `show nat rule config-check`

**Mode** Privileged Exec

**Usage notes** NAT rules are applied to applications and entities. A rule is not valid if either the application, source entity or destination entity the rule applies to is not configured properly.

To configure applications and entities, see Application and Entity Commands.

**Examples** To check configuration validity of NAT rules, use the command:

```
awplus# show nat rule config-check
```

**Output** Figure 65-5: Example output from the **show nat rule config-check** command if rule configuration errors are detected

```
awplus#show nat rule config-check
Rule 10:
  Application does not have a protocol configured
  "From" entity does not exist
  "To" entity has no subnet or host addresses
```

**Output** Figure 65-6: Example output from the **show nat rule config-check** command if all rules are valid

```
awplus#show nat rule config-check
All rules are valid
```

# show running-config nat

**Overview** Use this command to show the configuration commands that have been used to configure NAT.

**Syntax** `show running-config nat`

**Mode** Privileged Exec

**Examples** To show the configuration commands that have been used to configure NAT, use the commands:

```
awplus# show running-config nat
```

**Output** Figure 65-7: Example output from the **show running-config nat** command

```
awplus#show running-config nat
nat
 rule 10 masq http from private to public
 rule 20 portfw http from public with dst dmz.servers.wb
 enable
!
```

# Part 9: Advanced Network Protection

# 66 IPS Commands

## Introduction

**Overview** This chapter provides an alphabetical reference of commands used to configure Intrusion Prevention System (IPS). For more information, see the IPS Feature Overview and Configuration_Guide.

The table below lists the IPS commands and their applicable modes.

Figure 66-1: IPS Commands and Applicable Modes

| Mode | Command |
|---|---|
| Privileged Exec | show ips |
| | show ips categories |
| | show running-config ips |
| Global Configuration | ips |
| IPS Mode | alert-thresholding |
| | category action (IPS) |
| | protect (IPS) |

**Command List**


- "alert-thresholding" on page 3321
- "category action (IPS)" on page 3322
- "ips" on page 3323
- "protect (IPS)" on page 3324
- "show ips" on page 3325
- "show ips categories" on page 3326
- "show running-config ips" on page 3328

# alert-thresholding

**Overview**

Use this command to limit IPS to a maximum of 6 alerts per minute per destination IP address. This prevents IPS alerts from overwhelming the log files.

Use the **no** variant of this command to turn off the limit if you need to log every packet that matches an IPS rule (for example, for debugging purposes).

**Syntax**

```
alert-thresholding
no alert-thresholding
```

**Default**

Enabled

**Mode**

IPS Configuration

**Example**

To stop limiting the number of IPS alerts, so that the device logs every packet that matches an IPS rule, use the commands:

```
awplus# configure terminal
awplus(config)# ips
awplus(config-ips)# no alert-thresholding
```

To limit the number of IPS alerts again, use the commands:

```
awplus# configure terminal
awplus(config)# ips
awplus(config-ips)# alert-thresholding
```

**Related commands**

show log

show ips

**Command changes**

Version 5.5.0-2.1: command added

# category action (IPS)

**Overview** Use this command to configure an action for a specified category.

Use the **no** variant of this command to set the default action of alert for a specified category.

**Syntax**

```
category <category-name> action {alert|deny|disable}
no category <category-name> action
```

| Parameter | Description |
|---|---|
| `<category-name>` | Category name. A category is a label that helps to classify the nature of traffic, for example, whether it is spammer, spot or spyware and so on. Once IPS protection is enabled, traffic will be categorized according to the available IPS categories. You can use the show ips categories command to view the categories and their actions. |
| `alert` | Generate a log message. This is the default action. |
| `deny` | Drop the matching packets. No error message is sent back to the source host. |
| `disable` | Ignore a specified category. Ignored categories will not be used to categorize traffic. |

**Default** The default action is alert.

**Mode** IPS Mode

**Examples** To drop packet categorized as `checksum`, use the commands:

```
awplus# configure terminal
awplus(config)# ips
awplus(config-ips)# category checksum action deny
```

To set the default action for category `checksum`, use the commands:

```
awplus# configure terminal
awplus(config)# ips
awplus(config-ips)# no category checksum action
```

**Validation Commands** show ips categories

show running-config ips

# ips

**Overview** Use this command to configure IPS.

Use the **no** variant of this command to remove all IPS configuration.

**Syntax**

```
ips
no ips
```

**Mode** Global Configuration

**Usage notes** This command allows you to enter the IPS mode. The command prompt for this mode is **awplus(config-ips)#**.

In the IPS mode, you can:

- Enable or disable IPS protection, see the protect (IPS) command.
- Configure an action for specified categories, see the category action (IPS) command.

**Examples** To configure IPS, use the commands:

```
awplus# configure terminal
awplus(config)# ips
awplus(config-ips)#
```

To remove all IPS configuration, use the commands:

```
awplus# configure terminal
awplus(config)# no ips
```

# protect (IPS)

**Overview**

Use this command to enable IPS protection .

Use the **no** variant of this command to disable IPS protection.

**Syntax**

```
protect
no protect
```

**Usage notes**

Once IPS protection is enabled, traffic will be categorized according to the available IPS categories. See the show ips categories command for the list of available IPS categories.

**Default**

IPS is disabled by default.

**Mode**

IPS Mode

**Examples**

To enable IPS protection, use the commands:

```
awplus# configure terminal
awplus(config)# ips
awplus(config-ips)# protect
```

To disable IPS protection, use the commands:

```
awplus# configure terminal
awplus(config)# ips
awplus(config-ips)# no protect
```

**Validation Commands**

show ips

show running-config ips

# show ips

**Overview** Use this command to show the IPS configuration state and event count for the Intrusion Prevention System (IPS).

**Syntax** `show ips`

**Mode** Privileged Exec

**Examples** To display information about IPS, use the command:

```
awplus# show ips
```

**Output** Figure 66-2: Example output from **show ips**

```
awplus#show ips
Status:             Enabled (Active)
Events:             4
Alert Thresholding: Enabled
```

Table 66-1: Parameters in the output from **show ips**

| Parameter | Description |
|---|---|
| Alert Thresholding | Either Enabled or Disabled. When enabled, IPS produces a maximum of 6 alerts per minute per destination IP address. This prevents IPS alerts from overwhelming the log files. To enable or disable this, use the alert-thresholding command. |

# show ips categories

**Overview** Use this command to show the IPS categories and their actions.

Note that if the IPS database provider is configured, this commands shows only the provider's categories.

**Syntax** `show ips categories`

**Mode** Privileged Exec

**Examples** To show the IPS categories and their actions, use the command:

```
awplus# show ips categories
```

**Output** Figure 66-3: Example output of built-in categories from the **show ips categories** command

```
awplus#show ips categories
Category (* = invalid)       Action
---------------------------------------
  checksum                   alert
  ftp-bounce                 alert
  gre-decoder-events         alert
  http-events                alert
  icmp-decoder-events        alert
  ip-decoder-events          alert
  ppp-decoder-events         alert
  smtp-events                alert
  stream-events              alert
  udp-decoder-events         alert
```

| Parameter | Description |
|---|---|
| `checksum` | Invalid checksums, e.g. IPv4, TCPv4, UDPv4, ICMPv4,TCPv6, UDPv6, ICMPv6. |
| `ftp-bounce` | GPL FTP PORT bounce attempt. |
| `gre-decoder events` | GRE anomalies, e.g. GRE packet too small, GRE wrong version, GRE v0 recursion control, GRE v0 flags, GRE v0 header too big, GRE v1 checksum present, GRE v1 routing present, GRE v1 strict source route, GRE v1 recursion control. |
| `http-events` | HTTP anomalies, e.g. HTTP unknown error, HTTP gzip decompression failed, HTTP request field missing colon, HTTP response field missing colon, HTTP invalid request chunk len, HTTP invalid response chunk len, HTTP status 100-Continue already seen, HTTP unable to match response to request, HTTP invalid server port in request. |

| Parameter | Description |
|---|---|
| `icmp-decoder-events` | ICMP anomalies, e.g. IPv6 with ICMPv4 header, ICMPv4 packet too small, ICMPv4 unknown type, ICMPv6 truncated packet, ICMPv6 unknown version. |
| `ip-decoder-events` | IPv4 & IPv6 anomalies, e.g. IPv4 packet too small, IPv4 header size too small, IPv4 wrong IP version, IPv6 packet too small, IPv6 duplicated Routing extension header, IPv6 duplicated Hop-By-Hop Options extension header, IPv6 DSTOPTS only padding, SLL packet too small, Ethernet packet too small, VLAN header too small, FRAG IPv4 Fragmentation overlap, FRAG IPv6 Packet size too large, IPv4-in-IPv6 invalid protocol, IPv6-in-IPv6 packet too short. |
| `ppp-decoder-events` | PPP anomalies, e.g. PPP packet too small, PPP IPv6 too small, PPP wrong type, PPPoE wrong code, PPPoE malformed tags. |
| `smtp-events` | SMTP anomalies, e.g. SMTP invalid reply, SMTP max reply line len exceeded, SMTP tls rejected, SMTP data command rejected. |
| `stream-events` | TCP anomalies, e.g. 3way handshake with ack in wrong dir, 3way handshake async wrong sequence, 3way handshake right seq wrong ack evasion, 4way handshake SYNACK with wrong ACK, STREAM CLOSEWAIT FIN out of window, STREAM ESTABLISHED SYNACK resend, STREAM FIN invalid ack, STREAM FIN1 ack with wrong seq, STREAM TIMEWAIT ACK with wrong seq, stream-events TCP packet too small, stream-events TCP duplicated option) |
| `udp-decoder-events` | UDP anomalies, e.g. UDP packet too small, UDP header length too small, UDP invalid header length |

# show running-config ips

**Overview** Use this command to show the configuration commands that have been used to configure IPS.

**Syntax** `show running-config ips`

**Mode** Privileged Exec

**Examples** To show the commands that have been used to configure IPS, use the command:

```
awplus# show running-config ips
```

**Output** Figure 66-4: Example output from the **show running-config ips** command

```
awplus#show running-config ips
ips
 protect
!
```

# 67 Malware Protection Commands

## Introduction

This chapter provides an alphabetical reference of commands used to configure Malware Protection. For more information about Malware Protection and a configuration example, see the Advanced Network Protection Feature Overview and_Configuration Guide.

The table below lists the Malware Protection commands and their applicable modes.

Figure 67-1: Malware Protection commands and applicable modes

| Mode | Command |
|---|---|
| Privileged Exec | show malware-protection |
| | show running-config malware-protection |
| Global Configuration | malware-protection |
| Malware Protection Mode | protect (malware) |
| | provider kaspersky (malware) |
| | update-interval (malware) |

**Command List**


- "malware-protection" on page 3330
- "protect (malware)" on page 3331
- "provider kaspersky (malware)" on page 3332
- "show malware-protection" on page 3333
- "show running-config malware-protection" on page 3334
- "update-interval (malware)" on page 3335

# malware-protection

**Overview**

Use this command to configure Malware Protection.

Use the **no** variant of this command to remove all Malware Protection configuration.

**Syntax**

```
malware-protection
no malware-protection
```

**Mode**

Global Configuration

**Usage notes**

This command allows you to enter the Malware Protection Mode. The command prompt for this mode is **awplus(config-malware)#**.

In the Malware Protection Mode, you can:

- Set the Malware Protectin provider, see the provider kaspersky (malware) command.
- Enable or disable Malware Protection, see the protect (malware) command.

**Examples**

To configure Malware Protection settings, use the commands:

```
awplus# configure terminal
awplus(config)# malware-protection
awplus(config-malware)#
```

To remove all Malware Protection configuration, use the commands:

```
awplus# configure terminal
awplus(config)# no malware-protection
```

**Validation Commands**

show malware-protection

# protect (malware)

**Overview**

Use this command to enable Malware Protection.

Use the **no** variant of this command to disable Malware Protection without losing existing Malware Protection configuration.

Note that you need to use the provider kaspersky (malware) command to set Malware Protection provider before issuing this command to enable Malware Protection.

**Syntax**

```
protect
no protect
```

**Default**

Malware Protection is disabled by default.

**Mode**

Malware Protection Mode

**Examples**

To enable Malware Protection, use the commands:

```
awplus# configure terminal
awplus(config)# malware-protection
awplus(config-malware)# provider kaspersky
awplus(config-malware)# protect
```

To disable Malware Protection, use the commands:

```
awplus# configure terminal
awplus(config)# malware-protection
awplus(config-malware)# no protect
```

**Validation Commands**

show malware-protection

show running-config malware-protection

**Related commands**

provider kaspersky (malware)

# provider kaspersky (malware)

**Overview**

Use this command to set Malware Protection provider.

Malware Protection provider provides a signature database containing a list of known threat patterns. The database is kept up-to-date to ensure the effectiveness of the detection. You can use the update-interval (malware) command to configure the update check interval and update local database if needed.

Note that you need to set Malware Protection provider before issuing protect (malware) command to enable Malware Protection.

**Syntax**

```
provider kaspersky
```

**Default**

No Malware Protection provider is set.

**Mode**

Malware Protection Mode

**Examples**

To set Malware Protection provider, use the commands:

```
awplus# configure terminal
awplus(config)# malware-protection
awplus(config-malware)# provider kaspersky
```

**Validation Commands**

show malware-protection

show running-config malware-protection

**Related commands**

protect (malware)

# show malware-protection

**Overview** Use this command to show the information about the operation of Malware Protection.

**Syntax**

```
show malware-protection
```

**Mode** Privileged Exec

**Examples** To show the operation of Malware Protection, use the command:

```
awplus# show malware-protection
```

**Output** Figure 67-2: Example output from **show malware-protection** if the subscription license for Malware Protection is active.

```
awplus#show malware-protection
Status:      Enabled (Active)
Events:      0
Provider:    Kaspersky
Resource version:         1.0
Resource update interval: 1 hour
```

**Command changes** Version 5.4.7-0.1: Event count added to the command output.

# show running-config malware-protection

**Overview** Use this command to show the configuration information about Malware Protection.

**Syntax** `show running-config malware-protection`

**Mode** Privileged Exec

**Examples** To show the running configuration of Malware Protection, use the command:

```
awplus# show running-config malware-protection
```

**Output** Figure 67-3: Example output from the **show running-config malware-protection** command on the console

```
awplus#show running-config malware-protection
malware-protection
 provider kaspersky
 protect
!
```

# update-interval (malware)

**Overview**

Use this command to configure an update check interval for the Malware Protection resource files.

Use the **no** variant of this command to restore the default update check interval to 1 hour.

**Syntax**

```
update-interval {minutes <10-525600>|hours <1-8760>|days
<1-365>|weeks <1-52>|never}
```

```
no update-interval
```

| Parameter | Description |
|---|---|
| `minutes <10-525600>` | Update interval from 10 through 52600 minutes |
| `hours <1-8760>` | Update interval from 1 hour through 8760 hours |
| `days <1-365>` | Update interval from 1 day through 365 days |
| `weeks <1-52>` | Update interval from 1 week through 52 weeks |
| `never` | Never update the resource. If Malware Protection becomes enabled, the Update Manager will do update check and update the resource files if needed. Use the protect (malware) command to enable Malware Protection. |

**Default**

The default update interval is 1 hour.

**Mode**

Malware Protection Mode

**Usage notes**

The Update Manager will perform an update check for a resource when triggered by an update check interval. It will request the current version number of the resource from the Update Server, then compare it with the current local version. If they are different, the Update Manager will initiate an update of the local resource.

The Update Manager will revert to last known good resource file if installation of an updated resource fails.

Note that when a feature is disabled, regular and manual update checks for its resources are disabled.

Also note that an update check for a resource will not proceed if an update of that resource is already in progress.

**Examples**

To check and update the Malware Protection resource files once a week, use the command:

```
awplus(config-malware)# update-interval weeks 1
```

To disable updating of the resource, use the command:

```
awplus(config-malware)# update-interval never
```

To restore the default update interval, which is 1 hour, use the command:

```
awplus(config-malware)# no update-interval
```

**Validation Commands**

show resource

# 68 Antivirus Commands

## Introduction

**Overview** This chapter provides an alphabetical reference of commands used to configure Antivirus. For more information about Antivirus and its configuration, see the Antivirus sections contained within the Advanced Network Protection Feature Overview and Configuration Guide.

The following table lists the Antivirus commands and their applicable modes.

Figure 68-1: Antivirus commands and applicable modes

| Mode | Command |
|---|---|
| Privileged Exec | show antivirus |
| | show antivirus statistics |
| | show running-config antivirus |
| | debug antivirus |
| | show debugging antivirus |
| Global Configuration | antivirus |
| Antivirus Mode | action (antivirus) |
| | protect (antivirus) |
| | provider kaspersky (antivirus) |
| | update-interval (antivirus) |

**Command List**


- "action (antivirus)" on page 3339
- "antivirus" on page 3341
- "debug antivirus" on page 3342
- "protect (antivirus)" on page 3343

- "provider kaspersky (antivirus)" on page 3344
- "show antivirus" on page 3345
- "show antivirus statistics" on page 3346
- "show debugging antivirus" on page 3347
- "show running-config antivirus" on page 3348
- "update-interval (antivirus)" on page 3349

# action (antivirus)

**Overview** Use this command to set the action to take when a scan fails or when a scan limit is exceeded.

Use the **no** variant of this command to restore the default action, which is deny.

**Syntax**

```
action {scan-failed|limit-exceeded} {deny|permit}
no action {scan-failed|limit-exceeded}
```

| Parameter | Description |
|---|---|
| `scan-failed` | Scan failed for a wide variety of possible reasons, for example, encrypted or corrupt file type, out of temporary memory, license expired. |
| `limit-exceeded` | Scan failed due to a nesting limit or memory limit being exceeded. Antivirus can extract and scan nested files up to 3 levels deep. The maximum size of a file object that can be sent for scanning is 10MB. The maximum total size of all objects that can be concurrently scanned is 100MB. |
| `deny` | Block HTTP request. |
| `permit` | Allow HTTP request. |

**Default** The default action is deny when a scan failed or a scan limit is exceeded.

**Mode** Antivirus Mode

**Examples** To allow HTTP traffic when a scan fails, use the commands:

```
awplus# configure terminal
awplus(config)# antivirus
awplus(config-antivirus)# action scan-failed permit
```

To block HTTP request when a scan fails, use the commands:

```
awplus# configure terminal
awplus(config)# antivirus
awplus(config-antivirus)# action scan-failed deny
```

To allow HTTP request when a scan limit is exceeded, use the commands:

```
awplus# configure terminal
awplus(config)# antivirus
awplus(config-antivirus)# action limit-exceeded permit
```

To block HTTP traffic when a scan limit is exceeded, use the commands:

```
awplus# configure terminal
awplus(config)# antivirus
awplus(config-antivirus)# action limit-exceeded deny
```

To restore the default action when a scan fails, use the commands:

```
awplus# configure terminal
awplus(config)# antivirus
awplus(config-antivirus)# no action scan-failed
```

To restore the default action when a scan limit is exceeded, use the commands:

```
awplus# configure terminal
awplus(config)# antivirus
awplus(config-antivirus)# no action limit-exceeded
```

**Validation Commands**

show antivirus

# antivirus

**Overview**

Use this command to configure Antivirus.

Use the **no** variant of this command to remove all Antivirus configuration.

**Syntax**

```
antivirus
no antivirus
```

**Mode**

Global Configuration

**Usage notes**

This command allows you to enter the Antivirus Mode. The command prompt for this mode is **awplus(config-antivirus)#**.

In the Antivirus Mode, you can:

- Set the action to take if a scan failed or a scan limit is exceeded, see the action (antivirus) command.
- Enable or disable Antivirus protection, see the protect (antivirus) command.

**Examples**

To configure Antivirus settings, use the commands:

```
awplus# configure terminal
awplus(config)# antivirus
awplus(config-antivirus)#
```

To remove all Antivirus configuration, use the commands:

```
awplus# configure terminal
awplus(config)# no antivirus
```

**Validation Commands**

show antivirus

# debug antivirus

**Overview**

Use this command to enable Antivirus debugging. This will cause additional detailed debugging information to be logged at the "informational" and "debugging" levels.

Use the **no** variant of this command to disable Antivirus debugging.

**Syntax**

```
debug antivirus
no debug antivirus
```

**Default**

Antivirus debugging is disabled by default.

**Mode**

Privileged Exec

**Examples**

To enable Antivirus debugging, use the command:

```
awplus# debug antivirus
```

To disable Antivirus debugging, use the command:

```
awplus# no debug antivirus
```

**Validation Commands**

show debugging antivirus

show antivirus

# protect (antivirus)

**Overview**

Use this command to enable Antivirus protection.

Use the **no** variant of this command to disable Antivirus protection without losing existing Antivirus configuration.

Note that you need to use the provider kaspersky (antivirus) command to set Antivirus provider before issuing this command to enable Antivirus protection.

**Syntax**

```
protect
no protect
```

**Default**

Antivirus is disabled by default.

**Mode**

Antivirus Mode

**Examples**

To enable Antivirus protection, use the commands:

```
awplus# configure terminal
awplus(config)# antivirus
awplus(config-antivirus)# provider kaspersky
awplus(config-antivirus)# protect
```

To disable Antivirus protection, use the commands:

```
awplus# configure terminal
awplus(config)# antivirus
awplus(config-antivirus)# no protect
```

**Validation Commands**

show antivirus

show running-config antivirus

**Related commands**

provider kaspersky (antivirus)

# provider kaspersky (antivirus)

**Overview**

Use this command to set Antivirus provider.

Antivirus provider provides a signature database containing a list of known threat patterns. The database is kept up-to-date to ensure the effectiveness of the detection. You can use the update-interval (antivirus) command to configure the update check interval and update local database if needed.

Note that you need to set Antivirus provider before issuing protect (antivirus) command to enable Antivirus protection.

**Syntax**

```
provider kaspersky
```

**Default**

No Antivirus provider is set.

**Mode**

Antivirus Mode

**Examples**

To set Antivirus provider, use the commands:

```
awplus# configure terminal
awplus(config)# antivirus
awplus(config-antivirus)# provider kaspersky
```

**Validation Commands**

show antivirus

show running-config antivirus

**Related commands**

protect (antivirus)

# show antivirus

**Overview** Use this command to show the information about the operation of Antivirus.

**Syntax** `show antivirus`

**Mode** Privileged Exec

**Examples** To show the operation of Antivirus, use the command:

```
awplus# show antivirus
```

**Output** Figure 68-2: Example output from the **show antivirus** command on the console if the subscription license of Antivirus is active.

```
Status:      Enabled (Active)
Provider:    Kaspersky
Scan failed action:    block
Limit exceeded action: block
Resource version:         1.0
Resource update interval: 1 hour
```

Figure 68-3: Example output from the **show antivirus** command on the console if the subscription license of Antivirus is inactive.

```
awplus#show antivirus
Status:      Enabled (Inactive Unlicensed)
Provider:    Kaspersky
Scan failed action:    block
Limit exceeded action: block
Resource version:         not set
Resource update interval: 1 hour
```

# show antivirus statistics

**Overview** Use this command to show Antivirus statistics.

**Syntax** `show antivirus statistics`

**Mode** Privileged Exec

**Examples** To show Antivirus statistics, use the command:

```
awplus# show antivirus statistics
```

**Output** Figure 68-4: Example output from the **show antivirus statistics** command

```
awplus#show antivirus statistics
Proxy Antivirus Statistics:
 Files scanned:        1572
 Files skipped:        0
 Viruses found:        3 (0.2%)
 Scan failures:        0 (0.0%)
 Limit exceeded:       0 (0.0%)
```

| Output Parameter | Description |
|---|---|
| `Files scanned` | The number of files that have been scanned. |
| `Files skipped` | The number of files that could not be scanned. |
| `Viruses found` | The number of files that contain a virus. Also shown as a percentage of total number of scanned files. |
| `Scan failures` | The number of times a scan failed. Also shown as a total number of scans. |
| `Limit exceeded` | The number of times a scan limit is exceeded. Also shown as a total number of scans. |

# show debugging antivirus

**Overview** Use this command to see what debugging is turned on for Antivirus.

**Syntax**

```
show debugging antivirus
```

**Mode** Privileged Exec

**Examples** To show the Antivirus debugging setting, use the command:

```
awplus# show debugging antivirus
```

**Output** Figure 68-5: Example output from the **show debugging antivirus** command

```
awplus#show debugging antivirus
Antivirus Debugging Status: on
```

**Related commands** debug antivirus

# show running-config antivirus

**Overview** Use this command to show the configuration information about Antivirus.

**Syntax**

```
show running-config antivirus
```

**Mode** Privileged Exec

**Examples** To show the running configuration of Antivirus, use the command:

```
awplus# show running-config antivirus
```

**Output** Figure 68-6: Example output from the **show running-config antivirus** command

```
awplus#show running-config antivirus
antivirus
 provider kaspersky
 action scan-failed permit
 update-interval weeks 1
 protect
!
```

# update-interval (antivirus)

**Overview** Use this command to configure an update check interval for the Antivirus resource files.

Use the **no** variant of this command to restore the default update check interval to 1 hour.

**Syntax**

```
update-interval {minutes <10-525600>|hours <1-8760>|days
<1-365>|weeks <1-52>|never}
```

```
no update-interval
```

| Parameter | Description |
|---|---|
| `minutes <10-525600>` | Update interval from 10 through 52600 minutes |
| `hours <1-8760>` | Update interval from 1 hour through 8760 hours |
| `days <1-365>` | Update interval from 1 day through 365 days |
| `weeks <1-52>` | Update interval from 1 week through 52 weeks |
| `never` | Never update the resource. If Antivirus becomes enabled, the Update Manager will do update check and update the resource files if needed. Use the protect (antivirus) command to enable Antivirus. |

**Default** The default update interval is 1 hour.

**Mode** Antivirus Mode

**Usage notes** The Update Manager will perform an update check for a resource when triggered by an update check interval. It will request the current version number of the resource from the Update Server, then compare it with the current local version. If they are different, the Update Manager will initiate an update of the local resource.

The Update Manager will revert to last known good resource file if installation of an updated resource fails.

Note that when a feature is disabled, regular and manual update checks for its resources are disabled.

Also note that an update check for a resource will not proceed if an update of that resource is already in progress.

**Examples** To check and update the Antivirus resource files once a week, use the command:

```
awplus(config-antivirus)# update-interval weeks 1
```

To disable updating of the resource, use the command:

```
awplus(config-antivirus)# update-interval never
```

To restore the default update interval, which is 1 hour, use the command:

```
awplus(config-antivirus)# no update-interval
```

**Validation Commands** show resource

# 69 URL Filtering Commands

## Introduction

**Overview** This chapter provides an alphabetical reference of commands used to configure URL filtering.

URL filtering blocks all HTTP and HTTPS access to a list of websites. You can either specify a short list of websites to block (up to 1000 blacklist and 1000 whitelist rules), or subscribe to the blacklist service offered by Kaspersky. If you subscribe to the Kaspersky service, you can create custom blacklists to block additional URLs not in the Kaspersky blacklist or custom whitelists to allow URLs that the Kaspersky service blocks.

For more information, see the URL Filtering Feature Overview_and Configuration Guide.

The following table lists the URL filtering commands and their applicable modes.

Figure 69-1: URL filtering commands and applicable modes

| Mode | Command |
|---|---|
| Privileged Exec | show running-config url-filter |
| | show url-filter |
| | url-filter reload custom-lists |
| Global Configuration | url-filter |
| URL Filter Configuration | blacklist |
| | protect (url-filter) |
| | provider kaspersky (url-filter) |
| | update-interval (url-filter) |
| | whitelist (url-filter) |

**Command List**

- "blacklist" on page 3353

- "log url-requests" on page 3355
- "protect (url-filter)" on page 3356
- "provider kaspersky (url-filter)" on page 3357
- "show running-config url-filter" on page 3358
- "show url-filter" on page 3359
- "update-interval (url-filter)" on page 3360
- "url-filter reload custom-lists" on page 3362
- "url-filter" on page 3363
- "whitelist (url-filter)" on page 3364

# blacklist

**Overview** Use this command to add a custom blacklist file to the URL filtering configuration.

Use the **no** variant of this command to remove a blacklist from the URL filtering configuration.

**Syntax**

```
blacklist <location_of_blacklist_file>
no blacklist <location_of_blacklist_file>
```

| Parameter | Description |
|---|---|
| *<location_of_blacklist_file>* | Location of the blacklist file.<br>The blacklist file can be located in flash, or on an SD card or a USB device. |

**Mode** URL Filter Configuration

**Usage notes** You can use custom blacklists to specify URLs to be blocked.

If you are using the Kaspersky service, custom blacklists are processed before the Kaspersky blacklist.

For information about blacklist rule format, see the URL Filtering Feature Overview and Configuration Guide.

You can use the whitelist (url-filter) command to add a whitelist that will override any corresponding blacklist entries.

**Examples** To add a blacklist that uses a custom file that is stored on an SD card, and then enable URL filtering, use the commands:

```
awplus# configure terminal
awplus(config)# url-filter
awplus(config-url-filter)# blacklist card:/my_blacklist.txt
awplus(config-url-filter)# protect
```

To remove that blacklist file from the URL filtering configuration, use the commands:

```
awplus# configure terminal
awplus(config)# url-filter
awplus(config-url-filter)# no blacklist card:/my_blacklist.txt
```

To add a blacklist that uses a custom file that is stored on a USB device, and then enable URL filtering, use the commands:

```
awplus# configure terminal
awplus(config)# url-filter
awplus(config-url-filter)# blacklist usb:/my_blacklist.txt
awplus(config-url-filter)# protect
```

To remove that blacklist file from the URL filtering configuration, use the commands:

```
awplus# configure terminal
awplus(config)# url-filter
awplus(config-url-filter)# no blacklist usb:/my_blacklist.txt
```

**Related commands**

protect (url-filter)

show url-filter

url-filter reload custom-lists

whitelist (url-filter)

# log url-requests

**Overview**

If URL Filtering is enabled, then by default, black list hits and issues with match criteria and list files are logged.

Use this command to enable logging of all HTTP and HTTPS URL requests (both permitted and denied) passing through the firewall.

Use the **no** variant of this command to disable extra logging of HTTP and HTTPS URL requests passing through the firewall.

**Syntax**

```
log url-requests
no log url-requests
```

**Default**

Disabled by default.

**Mode**

URL Filter Configuration

**Usage notes**

When enabled, additional log messages for HTTP and HTTPS URL requests passing through the firewall contain the:

- URL being accessed
- IP address of the user that requested the URL

**Example**

To configure logging of all HTTP and HTTPS URL requests passing through the firewall (permitted as well as denied), use the following commands:

```
awplus# configure terminal
awplus(config)# url-filter
awplus(config-url-filter)# log url-requests
```

**Related commands**

url-filter

**Command changes**

Version 5.4.7-1.1: command added

# protect (url-filter)

**Overview**

Use this command to enable URL filter protection.

Use the **no** variant of this command to disable URL filter protection without losing the existing URL filter configuration.

**Syntax**

```
protect
no protect
```

**Default**

URL filter protection is disabled by default and all HTTP and HTTPS traffic is allowed.

**Mode**

URL Filter Configuration

**Usage notes**

If you are subscribed to the Kaspersky service, you must enter the provider kaspersky (url-filter) command before entering this command.

**Examples**

To enable URL filter protection, use the commands:

```
awplus# configure terminal
awplus(config)# url-filter
awplus(config-url-filter)# provider kaspersky
awplus(config-url-filter)# protect
```

To disable URL filter protection, use the commands:

```
awplus# configure terminal
awplus(config)# url-filter
awplus(config-url-filter)# no protect
```

**Related commands**

provider kaspersky (url-filter)

show url-filter

**Command changes**

Version 5.4.7-1.1: HTTPS support added.

# provider kaspersky (url-filter)

**Overview**

Use this command to set Kaspersky as the URL filter blacklist provider, and register Kaspersky's blacklist file with the update manager. This feature requires a Kaspersky subscription. For more information on Kaspersky see their website https://support.kaspersky.com

**Syntax**

```
provider kaspersky
```

**Mode**

URL Filter Configuration

**Usage notes**

Kaspersky provides constantly updated blacklists that can be used for URL filtering. An HTTP or HTTPS request that includes a URL that matches an entry in the blacklist will be dropped.

***NOTE:*** *that if you are using the Kaspersky service, you must enter this command before enabling URL filtering with the* ***protect*** *command.*

**Examples**

To configure Kaspersky as the URL filter blacklist provider and then enable URL filtering, use the commands:

```
awplus# configure terminal
awplus(config)# url-filter
awplus(config-url-filter)# provider kaspersky
awplus(config-url-filter)# protect
```

**Related commands**

protect (url-filter)

show url-filter

**Command changes**

Version 5.4.7-1.1: HTTPS support added.

# show running-config url-filter

**Overview** Use this command to show the running configuration information for URL filtering

**Syntax** `show running-config url-filter`

**Mode** Privileged Exec

**Examples** To show the running configuration of URL filtering, use the command:

```
awplus# show running-config url-filter
```

**Output** Figure 69-2: Example output from the **show running-config url-filter** command

```
awplus#show running-config url-filter
url-filter
 provider kaspersky
 protect
!
```

# show url-filter

**Overview** Use this command to show information about the configuration state of URL filtering.

**Syntax**

```
show url-filter
```

**Mode** Privileged Exec

**Examples** To show information about the configuration state of URL filtering, use the command:

```
awplus# show url-filter
```

**Output** Figure 69-3: Example output from **show url-filter**

```
awplus#show url-filter

Status:      Enabled (Active)
 Events:     104
Custom blacklists   Entries
 blacklist-example.txt  365
Custom whitelists   Entries
 whitelist-example.txt  4
```

**Output** Figure 69-4: Example output from **show url-filter** if the Kaspersky URL blacklist subscription license is active.

```
awplus#show url-filter

Status:      Enabled (Active)
Provider:    Kaspersky
 Status:              Enabled  (Active)
 Events:              104
 Resource version:    1.0
 Update interval:     1 hour
 Blacklist entries:   63457
Custom blacklists   Entries
 blacklist-example.txt  3
Custom whitelists   Entries
 whitelist-example.txt  1
```

**Command changes** Version 5.4.7-0.1: Event count added to the command output.

# update-interval (url-filter)

**Overview** Use this command to configure the update-interval for the URL filter provider blacklist resource file.

Use the **no** variant of this command to restore the default update check interval of 1 hour.

**Syntax**

```
update-interval {minutes <10-525600>|hours <1-8760>|days
<1-365>|weeks <1-52>|never}
```

```
no update-interval
```

| Parameter | Description |
|---|---|
| `minutes <10-525600>` | Update interval from 10 through 52600 minutes |
| `hours <1-8760>` | Update interval from 1 hour through 8760 hours |
| `days <1-365>` | Update interval from 1 day through 365 days |
| `weeks <1-52>` | Update interval from 1 week through 52 weeks |
| `never` | Never update the resource. When URL filtering protection is enabled, the update manager will do an update check and update the resource files if necessary. Use the protect (url-filter) command to enable URL filtering protection. |

**Default** The default update interval is 1 hour.

**Mode** URL Filter Configuration

**Usage notes** The update manager will perform an update check for a resource when triggered by an update check interval. It will request the current version number of the resource from the update server, then compare it with the current local version. If they are different, the update manager will initiate an update of the local resource.

The update manager will revert to the last known good resource file if installation of an updated resource fails.

Note that when a feature is disabled, regular and manual update checks for its resources are also disabled.

Also note that an update check for a resource will not proceed if an update of that resource is already in progress.

**Examples** To check and update the URL filter provider blacklist every 3 hours, use the command:

```
awplus(config-url-filter)# update-interval hours 3
```

To disable updating of the provider blacklist, use the command:

```
awplus(config-url-filter)# update-interval never
```

To configure resource update checking for URL filter to the default interval, which is 1 hour, use the command:

```
awplus(config-url-filter)# no update-interval
```

**Related commands**

protect (url-filter)

show resource

# url-filter reload custom-lists

**Overview** Use this command to reload all custom blacklists and whitelists after editing one or more of them.

**Syntax**

```
url-filter reload custom-lists
```

**Mode** Privileged Exec

**Examples** To reload all custom blacklists and whitelists, use the following command:

```
awplus# url-filter reload custom-lists
```

**Related commands**

blacklist

whitelist (url-filter)

# url-filter

**Overview**

Use this command to enter URL Filter Configuration mode and configure URL filtering functionality.

Use the **no** variant of this command to remove all URL filtering configuration.

**Syntax**

```
url-filter
no url-filter
```

**Mode**

Global Configuration

**Usage notes**

This command allows you to enter the URL Filter Configuration mode and changes the command prompt to **awplus(config-url-filter)#**.

The URL Filter Configuration mode enables you to:

- Enable URL filtering protection; see the protect (url-filter) command.
- Configure the provider blacklist; see the provider kaspersky (url-filter) command.
- Configure custom blacklists; see the blacklist command.
- Configure custom whitelists; see the whitelist (url-filter) command.

**Examples**

To enter the URL Filter Configuration mode, use the commands:

```
awplus# configure terminal
awplus(config)# url-filter
awplus(config-url-filter)#
```

To remove all URL filter configuration, use the commands:

```
awplus# configure terminal
awplus(config)# no url-filter
```

**Related commands**

blacklist

protect (url-filter)

provider kaspersky (url-filter)

show running-config

show url-filter

whitelist (url-filter)

# whitelist (url-filter)

**Overview** Use this command to add a custom whitelist file to the URL filtering configuration.

Use the **no** variant of this command to remove a whitelist from the URL filter configuration.

**Syntax**

```
whitelist <url_of_whitelist_file>
no whitelist <location_of_whitelist_file>
```

| Parameter | Description |
|---|---|
| *<location_of_whitelist_file>* | Location of the whitelist file.<br>The whitelist file can be located in flash, or on an SD card or a USB device. |

**Mode** URL Filter Configuration

**Usage notes** Whitelist matching precedes blacklist matching. You can use custom whitelists to override any corresponding blacklist entries. An HTTP or HTTPS request that includes a URL that matches an entry in a whitelist will be permitted.

For information about whitelist rule format, see the URL Filtering Feature Overview and_Configuration Guide.

**Examples** To add a whitelist that uses a custom file that is stored on an SD card, and then enable URL filtering, use the commands:

```
awplus# configure terminal
awplus(config)# url-filter
awplus(config-url-filter)# whitelist card:/my_whitelist.txt
awplus(config-url-filter)# protect
```

To remove that whitelist file from the URL filtering configuration, use the commands:

```
awplus# configure terminal
awplus(config)# url-filter
awplus(config-url-filter)# no whitelist card:/my_whitelist.txt
```

To add a whitelist that uses a custom file that is stored on a USB device, and then enable URL filtering, use the commands:

```
awplus# configure terminal
awplus(config)# url-filter
awplus(config-url-filter)# whitelist usb:/my_whitelist.txt
awplus(config-url-filter)# protect
```

To remove that whitelist file from the URL filtering configuration, use the commands:

```
awplus# configure terminal
awplus(config)# url-filter
awplus(config-url-filter)# no whitelist usb:/my_whitelist.txt
```

**Related commands**

blacklist

protect (url-filter)

show url-filter

url-filter reload custom-lists

**Command changes**

Version 5.4.7-1.1: HTTPS support added.

# 70 Web Control Commands

## Introduction

This chapter provides an alphabetical reference of commands used to configure Web Control. For more information, see the Web Control sections contained within the Advanced Network Protection Feature Overview and Configuration_Guide.

The table lists the Web Control commands and their applicable modes.

Figure 70-1: Web Control commands and applicable modes

| Mode | Command |
|---|---|
| Privileged Exec | debug web-control |
| | show web-control |
| | show web-control categories |
| | show debugging web-control |
| | show running-config web-control |
| | show web-control rules |
| Global Configuration | web-control |
| Web Control Configuration | action (web-control) |
| | category (web-control) |
| | provider digitalarts (web-control) |
| | protect (web-control) |
| | rule (web-control) |
| | move rule (web-control) |
| Web Control Category Configuration mode | match (web-control) |

**Command List**

- "action (web-control)" on page 3368

- "bypass-web-control entity" on page 3369
- "category (web-control)" on page 3371
- "debug web-control" on page 3373
- "match (web-control)" on page 3374
- "move rule (web-control)" on page 3376
- "protect (web-control)" on page 3377
- "provider digitalarts (web-control)" on page 3378
- "rule (web-control)" on page 3379
- "show debugging web-control" on page 3382
- "show running-config web-control" on page 3383
- "show web-control" on page 3384
- "show web-control bypass" on page 3386
- "show web-control categories" on page 3387
- "show web-control rules" on page 3389
- "web-control" on page 3390
- "web-control categorize" on page 3392

# action (web-control)

**Overview**

Use this command to set the action to take on uncategorized websites and categorized websites that don't hit any rule.

Use the **no** variant of this command to restore the default action which is deny.

**Syntax**

```
action {permit|deny}
no action
```

| Parameter | Description |
|---|---|
| permit | Allow access |
| deny | Block access |

**Default**

The default action is deny.

**Mode**

Web Control Configuration

**Examples**

To allow HTTP and HTTPS requests when no rules are hit, use the commands:

```
awplus# configure terminal
awplus(config)# web-control
awplus(config-web-control)# action permit
```

To restore the default action and block all HTTP and HTTPS requests when no rules are hit, use the commands:

```
awplus# configure terminal
awplus(config)# web-control
awplus(config-web-control)# no action
```

**Related commands**

show web-control

**Command changes**

Version 5.4.7-1.1: HTTPS support added.

# bypass-web-control entity

**Overview**

Use this command to allow traffic from a specific entity to bypass all web-control processing.

Use the **no** variant of this command to remove the web-control bypass for a specific entity.

**Syntax**

```
bypass-web-control <entity>
no bypass-web-control <entity>
```

| Parameter | Description |
|---|---|
| *<entity>* | The entity (zone, network, or host) which will not be processed by web-control. |

**Default**

All traffic is processed by web-control.

**Mode**

Privileged Exec

**Usage notes**

This command is useful, if you know that a specific server IP is safe for applications requiring this bypass feature to be configured.

For example, this command is useful to allow an application that connects using HTTPS port 443 but does not actually send HTTPS data over that port connection, leading to the connection being blocked, due to the suspect nature of the application data transported via that port. This command can therefore introduce security risk if used improperly, so should be used sparingly.

**Example**

If the following **entity** has been configured:

```
!
zone server
 network my
 host box
  ip address 192.168.2.2
!
```

Then, you can create a web-control bypass for the entity **server.my.box**, using the following commands:

```
awplus# configure terminal
awplus(config)# web-control
awplus(config-web-control)# bypass-web-control server.my.box
```

**Related commands**

show web-control bypass

**Command changes** Version 5.4.7-1.1: command added.

# category (web-control)

## Overview

Use this command to configure a category.

A category is a text string that represents a logical grouping of websites. For example "Blog" is the category given to URLs that link to websites that are classified as being associated with blogging. There are two types of category: provider categories and custom categories. Provider categories are pre-defined categories. Digital Arts provides and constantly updates about 100 provider categories. Custom categories are defined by the users.

Use the **no** variant of this command to delete a custom category and delete all its match criteria.

***NOTE:*** *You cannot delete a provider category, but you can use the **no** variant of this command to delete the custom match criteria from the provider category.*

## Syntax

```
category <category-name>
no category <category-name>
```

| Parameter | Description |
|---|---|
| *<category-name>* | Category name.<br>Category names are case insensitive and can be up to 64 characters long composed of printable ASCII characters. Spaces are allowed in category names, but the category names must be enclosed in double quotes (“). |

## Mode

Web Control Configuration

## Usage notes

You can use the to display both provider categories and custom categories.

You cannot delete the provider categories or modify their names, but you can configure custom match criteria for provider categories. Custom match criteria precede and override provider categorization. This means if a website matches the match criteria from custom categories, the website will not be further categorized by Digital Arts.

This command allows you to enter the Web Control Category Configuration mode with the prompt **awplus(config-category)#.** You can create a set of match criteria for a category in this sub-mode. The match criteria are applied to website URLs as a simple string comparison. For more information about match criteria, see the match (web-control) command.

You can also create a set of rules for a category. Rules set the action to take for an HTTP or HTTPS request from a specific entity. For more information about rules, see the rule (web-control) command. For more information about entities, see the Application and Entity Commands chapter.

**Examples**

To create a custom category named `work` and create match criteria for this category, use the commands:

```
awplus# configure terminal
awplus(config)# web-control
awplus(config-web-control)# category work
awplus(config-category)# match alliedtelesis
awplus(config-category)# match example
awplus(config-category)# match www.ietf.org
```

To delete the custom category and its match criteria, use the commands:

```
awplus# configure terminal
awplus(config)# web-control
awplus(config-web-control)# no category work
```

**Related commands**

match (web-control)

rule (web-control)

show web-control categories

**Command changes**

Version 5.4.7-1.1: HTTPS support added.

# debug web-control

**Overview**

Use this command to enable Web Control debugging. This will cause additional detailed debugging information to be logged at the “informational” and “debugging’ levels.

Use the **no** variant of this command to disable Web Control debugging.

**Syntax**

```
debug web-control
no debug web-control
```

**Default**

Web Control debugging is disabled by default.

**Mode**

Privileged Exec

**Examples**

To enable Web Control debugging, use the commands:

```
awplus# debug web-control
```

To disable Web Control debugging, use the commands:

```
awplus# no debug web-control
```

**Related commands**

show debugging web-control

# match (web-control)

## Overview

Use this command to add a match criterion for a category.

A match criterion is a static string that is compared to a website URL (domain name or IP address) for a partial or complete match. A URL will be searched to see if it contains the given match criterion string. If the URL contains the string, then the match criterion is matched.

Note that the match criterion is not applied to the web page content.

Use the **no** variant of this command to delete a match criterion.

***NOTE:*** *If a custom category's last match criterion is deleted, then the category is automatically deleted.*

## Syntax

```
match <word>
no match <word>
```

| Parameter | Description |
|---|---|
| *<word>* | A string that is used to compare with IP addresses or domain names. |

## Mode

Web Control Category Configuration

## Usage notes

Match criteria are case-insensitive and matched up to the first appearance of '?' (query string marker) or '#' (fragment identifier) in a website URL. For example, URL www.alliedtelesis.com/search.aspx?keyword=routers does not match the match criterion `match router` but www.alliedtelesis.com/routers does match that criterion.

When a URL matches a match criterion, the URL is categorized to the match criterion's category. A URL can be matched to more than one category. Custom match criteria override and precede provider categorization. If a URL or website matches custom criteria, then the URL will not be further sent for categorization by the provider criteria.

You can create up to 50 match criteria in total, so a category can have a maximum of 50 match criteria, or 50 categories can each have one match criterion, as long as the total number of the match criteria does not exceed 50.

For more information about categories, see the category (web-control) command.

## Examples

To create a match criterion with a string `ietf` for category `work`, use the commands:

```
awplus# configure terminal
awplus(config)# web-control
awplus(config-web-control)# category work
awplus(config-category)# match ietf
```

To delete a match criterion, use the commands:

```
awplus# configure terminal
awplus(config)# web-control
awplus(config-web-control)# category work
awplus(config-category)# no match ietf
```

To create a set of match criteria for category `movie`, use the commands:

```
awplus# configure terminal
awplus(config)# web-control
awplus(config-web-control)# category movie
awplus(config-category)# match youtube
awplus(config-category)# match imdb
awplus(config-category)# match rottentomatoes
```

**Related commands**

category (web-control)

show web-control categories

# move rule (web-control)

**Overview** Use this command to change the order of the Web Control rules. Note that a change to the rule order may change the Web Control results.

**Syntax**

```
move rule <1-65535> to <1-65535>
```

| Parameter | Description |
|---|---|
| `move rule <1-65535>` | Move the ID of a given rule. The rule ID of the given rule must exist.<br>Each rule has an ID which is either designated by the user or automatically generated when the rule is created. The rule ID is an integer from 1 to 65535. |
| `to <1-65535>` | New rule ID to assign. The new rule ID must not be used by any existing rule. |

**Mode** Web Control Configuration

**Usage notes** If a website is categorized into multiple categories because they have overlapping match criteria that have associated rules, only the rule with the lowest ID is applied. For example, a website is categorized into both category A associated with rule ID 1 and category B associated with ID 2. In this case, only category A's rule with ID 1 is applied to the website. To see the rule IDs, use the show web-control rules command.

You can move an existing rule ID only to an ID that is not assigned to any rule, otherwise you will be given an error message.

**Examples** To change the ID of a rule from `20` to `10`, use the commands:

```
awplus# configure terminal
awplus(config)# web-control
awplus(config-web-control)# move rule 20 to 10
```

**Related commands**

rule (web-control)

show web-control rules

# protect (web-control)

**Overview**

Use this command to enable Web Control protection.

Use the **no** variant of this command to disable Web Control protection without losing existing Web Control configuration.

**Syntax**

```
protect
no protect
```

**Default**

Web Control protection is disabled by default.

**Mode**

Web Control Configuration

**Usage notes**

Web Control protection is disabled and all HTTP and HTTPS traffic is allowed by default. You must issue the provider digitalarts (web-control) command to configure the categorization provider before using this command.

**Examples**

To enable Web Protection protection, use the commands:

```
awplus# configure terminal
awplus(config)# web-control
awplus(config-web-control)# provider digitalarts
awplus(config-web-control)# protect
```

To disable Web Control protection, use the commands:

```
awplus# configure terminal
awplus(config)# web-control
awplus(config-web-control)# no protect
```

**Related commands**

provider digitalarts (web-control)

show web-control

**Command changes**

Version 5.4.7-1.1: HTTPS support added.

# provider digitalarts (web-control)

**Overview** Use this command to set Digital Arts as the website categorization provider.

**Syntax**

```
provider digitalarts
```

**Mode** Web Control Configuration

**Usage notes** Digital Arts provides about 100 pre-defined categories. You can use the show web-control categories command to display the list of categories. For more information about categories, see the category (web-control) command.

Note that Web Control protection cannot be enabled by using the protect (web-control) command until the provider is configured.

**Examples** To configure Digital Arts as the website categorization provider, use the commands:

```
awplus# configure terminal
awplus(config)# web-control
awplus(config-web-control)# provider digitalarts
awplus(config-web-control)# protect
```

**Related commands**

protect (web-control)

show web-control

# rule (web-control)

**Overview** Use this command to create a Web Control rule for a category.

Use the **no** variant of this command to remove a rule.

**Syntax**

```
rule [<rule-ID>] {permit|deny} <category> from <entity>
no rule <1-65535>
```

| Parameter | Description |
|---|---|
| *<rule-ID>* | Rule ID in the range from 1 through 65535. If you don't designate a rule ID, a rule ID will be automatically generated and it will be greater than the current highest rule ID. |
| `permit` | Set the rule's action to permit the access. |
| `deny` | Set the rule's action to block the access. |
| *<category>* | Website category the rule applies to. |
| *<entity>* | Source entity the rule applies to. Entity is a high level abstraction of a network device, a group of networks or subnets. For more information about entities, see Application and Entity Commands. |

**Mode** Web Control Configuration

**Usage notes** A rule sets the action to take if a website matches one or more of the match criteria of the rule's category and the request's source matches the entity the rule applies to. You may create multiple rules for a category. If the request does not hit the first rule, then the request is assessed against the next. If the request does not hit any rule, then the action set by the action (web-control) command is taken. The default action Web Control performs for uncategorized websites and categorized websites that do not match a rule is to deny.

A rule's action can either deny or permit an HTTP or HTTPS request. If a request hits a rule with a permit action, then the HTTP or HTTPS traffic of that website is allowed to pass through the device. If a request hits a rule with a deny action, then the HTTP or HTTPS traffic of that website is blocked and the client gets a notification page.

Entities represent logical groupings of subnets, hosts or interfaces. For more information about entities, see Application and Entity Commands.

Rules are applied in order. Each rule has an ID which is either designated by the user or automatically generated. If a website is categorized into multiple categories because they have overlapping match criteria that have associated rules, only the rule with the lowest ID is applied. For example, a website is categorized into two categories: category A and category B. The rules for category A is allow, and for B is deny. If the rule ID of category A is lower than category B's,

then the action allow is applied. To see the rule IDs, use the show web-control rules command.

You can change the rule order by using the move rule (web-control) command. A change to the rule order may change the Web Control results.

A new reserved keyword **any** has been added to the parameter **<category>** from release 5.4.6-2 onwards. This new keyword allows you to apply Web Control on a per entity basis. See the Web Control Feature Overview_and Configuration Guide. for configuration examples.

If a configuration with the reserved word **any** was configured by an old release, the following error message appears at boot time:

Figure 70-2: Example error message when the reserved keyword **any** was used prior to release 5.4.6-2.

```
*WARNING: Failed to execute the following commands:
43: category any – % Category "any" is a reserved keyword
44: match a – % Invalid command or arguments
45: match b – % Invalid command or arguments
46: match c – % Invalid command or arguments
done! *
```

**Examples**

To create a rule that blocks `engineer` entity from accessing websites categorized as `movie`, use the commands:

```
awplus(config-web-control)# category movie
awplus(config-category)# match youtube
awplus(config-category)# match imdb
awplus(config-category)# exit
awplus(config-web-control)# rule 10 deny movie from engineer
```

To create a rule that allows entity `engineer` to access category `work`, use the commands:

```
awplus(config-web-control)# category work
awplus(config-category)# match alliedtelesis
awplus(config-category)# exit
awplus(config-web-control)# rule permit work from engineer
```

To delete a rule, use the commands:

```
awplus(config-web-control)#no rule 10
```

To create a rule using the reserved keyword any:

```
awplus(config-web-control)#rule deny badsites from private
awplus(config-web-control)# rule permit any from private
```

Rules are processed in order. In this example above the access to URLs associated with the named category “badsites” being accessed from the named firewall entity private will be blocked via the deny rule. Access to all other URLs originating from that specific firewall entity will be allowed via the subsequent permit any rule.

**Related commands**

show running-config

show running-config web-control

show web-control categories

show web-control rules

**Command changes**

Version 5.4.7-1.1: HTTPS support added.

Version 5.4.6-2.1: New category keyword 'any' added.

# show debugging web-control

**Overview** Use this command to show the Web Control debugging status.

**Syntax**

```
show debugging web-control
```

**Mode** Privileged Exec

**Examples** To show the Web Control debugging status, use the command:

```
awplus# show debugging web-control
```

**Output** Figure 70-3: Example output from the **show debugging web-control** command

```
awplus#show debugging web-control
Web Control Debugging Status: on
```

**Related commands** debug web-control

# show running-config web-control

**Overview** Use this command to show the configuration information about Web Control.

**Syntax**

```
show running-config web-control
```

**Mode** Privileged Exec

**Examples** To show the running configuration of Web Control, use the command:

```
awplus# show running-config web-control
```

**Output** Figure 70-4: Example output from **show running-config web-control**

```
awplus#show running-config web-control
web-control
 provider digitalarts
 protect
!
```

**Related commands**

rule (web-control)

show running-config

show web-control

web-control

# show web-control

**Overview** Use this command to display the information about the state of Web Control.

**Syntax** `show web-control`

**Mode** Privileged Exec

**Examples** To show the Web Control configuration, use the command:

```
awplus# show web-control
```

**Output** Figure 70-5: Example output from the **show web-control** command if the subscription license of Web Control is active.

```
awplus#show web-control
Web Control protection is enabled
Web Control default action is deny
Web Control is licensed
Categorization provider is Digital Arts
Statistics:
 Categorization hits: 40/40  (100.0%)
 Rule hits:   20/40  (50.0%)
 Cache hits:  30/40  (75.0%)
 Cache size:  40
```

Figure 70-6: Example output from the **show web-control** command if the subscription license of Web Control is inactive.

```
awplus#show web-control
Web Control protection is enabled
Web Control default action is deny
Web Control is unlicensed
Categorization provider is Digital Arts
Statistics:
 Categorization hits: 0/0  (0.0%)
 Rule hits:   0/0  (0.0%)
 Cache hits:  0/0  (0.0%)
 Cache size:  0
```

| Output Parameter for Statistics | Description |
|---|---|
| `Categorization hits` | The number of times the categories have been hit divided by the total number of HTTP and HTTPS requests. |
| `Rule hits` | The number of times the rules have been hit divided by the total number of requests. |

| Output Parameter for Statistics | Description |
|---|---|
| `Cache hits` | The number of times the cached websites have been hit divided by the total number of request to the cache. |
| `Cache size` | The number of websites that are currently cached in the system. |

**Related commands**

rule (web-control)

show running-config

show running-config web-control

show web-control categories

web-control

# show web-control bypass

**Overview** Use this command to display information about all web-control bypasses.

**Syntax**

```
show web-control bypass
```

**Mode** Privileged Exec

**Example** To display web-control bypass information, use the following commands:

```
awplus# configure terminal
awplus(config)# show web-control bypass
```

**Output** Figure 70-7: Example bypass configuration and output from **show web-control bypass**

```
!
zone server
network my
host box
ip address 192.168.2.2
!
!
web-control
action permit
provider digitalarts
bypass-web-control server.my.box
protect
!
awplus#show web-control bypass
Entity Name                        Bypass Hits
-------------------------------------------
server.my.box                              20
```

**Related commands** bypass-web-control entity

**Command changes** Version 5.4.7-1.1: command added.

# show web-control categories

**Overview** Use this command to display all Web Control categories, including custom and provider categories.

For more information about categories, see the category (web-control) command.

**Syntax** `show web-control categories`

**Mode** Privileged Exec

**Examples** To show all Web Control categories, use the command:

```
awplus# show web-control categories
```

**Output** Figure 70-8: Example output from the **show web-control categories** command

```
Category                                                  Category Hits  Custom
    Custom Matches
-------------------------------------------------------------------------------
Advertisement                                                     0     yes
    AdWords
    YellowPages
Advocacy                                                          0
"Alcohol, Tobacco"                                                0
"Amusement Facilities"                                            0
"Audio Streaming"                                                 0
Blogs                                                             0
"Browser Crashing Sites"                                          0
"Celebrities, Entertainment"                                      0
Chat                                                              0
"Comics, Animation"                                               0
"Consumer Lending"                                                0
"Coupon Sites"                                                    0
"Credit Cards, Online Payment, E-Money"                           0
"Crime, Weapons"                                                  0
--More--
```

| Output Parameter | Description |
|---|---|
| `Category` | Category names, including both provider categories and custom categories. |
| `Custom Matches` | Custom match criteria. |
| `Category Hits` | The number of times the category has been hit - that is, the number of times a website has been categorized into the category. |
| `Custom` | Indicate whether the category is custom category or not. Those that are not custom are provider categories. |

**Related commands**

rule (web-control)

show running-config web-control

show web-control rules

web-control

# show web-control rules

**Overview** Use this command to display the Web Control rules.

For more information about rules, see the rule (web-control) command.

**Syntax** `show web-control rules`

**Mode** Privileged Exec

**Examples** To show all Web Control rules, use the command:

```
awplus# show web-control rules
```

**Output** Figure 70-9: Example output from the **show web-control rules** command

```
#show web-control rules
ID     Action  Category                  From                        Hits
-----------------------------------------------------------------------
10     deny    "Online Trading"          rd.test.qa                     0
20     permit  "Browser Crashing Sites"  market.sales                   1
25     permit  suspicious_sites          rd                             2
```

| Output Parameter | Description |
|---|---|
| ID | Rule ID. |
| Action | The action taken whenever the rule is hit. |
| Category | The category the rule applies to. |
| From | The source entity the rule applies to. |
| Hits | The number of times the rule has been hit. |

**Related commands**

rule (web-control)

show running-config web-control

show web-control categories

web-control

# web-control

**Overview**

Use this command to enter the Web Control Configuration mode and configure Web Control functionality.

Use the **no** variant of this command to remove all configuration for Web Control. Custom categories, rules and other configuration associated with Web Control will be deleted.

**Syntax**

```
web-control
no web-control
```

**Mode**

Global Configuration

**Usage notes**

This command allows you to enter the Web Control Configuration mode. This mode also contains the sub- mode of Web Control Category Configuration. For more information about the sub-mode, see the category (web-control) command.

The Web Control Configuration mode enables you to:

- Enable Web Control protection, see the protect (web-control) command.
- Configure the website categorization provider, see the provider digitalarts (web-control) command.
- Create categories and associated match criteria, see the category (web-control) command.
- Create, delete and move rules for categories, see the rule (web-control) command and the move rule (web-control) command.
- Configure the default action for HTTP and HTTPS requests that do not hit any rule, see the action (web-control) command.

If you want to disable Web Control protection without removing the configuration, you can use the **no** variant of the protect (web-control) command to do so.

**Examples**

To enter the Web Control Configuration mode, use the commands:

```
awplus# configure terminal
awplus(config)# web-control
awplus(config-web-control)#
```

To destroy all Web Control configuration, use the commands:

```
awplus# configure terminal
awplus(config)# no web-control
```

**Related commands**

show running-config

show running-config web-control

show web-control

**Command changes** Version 5.4.7-1.1: HTTPS support added.

# web-control categorize

**Overview** Use this command to inquire about which web control categories website URLs belong to.

**Syntax** `web-control categorize [<url-list>]`

| Parameter | Description |
|---|---|
| *<url-list>* | One or more website HTTP or HTTPS URLs, separated by a space. If neither 'http://' nor 'https://' is specified in the URL, the default 'http://' is automatically added. |

**Mode** Privileged Exec

**Usage notes** When you use this command, the device sends an inquiry to the web control provider's server. The server responds with a category for each URL.

You can use this information together with web control rules to permit or deny traffic for the particular categories.

For inquires about HTTPS URLs, only the domain part of the URL is sent to the web control provider for categorization. This is the expected behaviour for HTTPS traffic, where only the domain name specified in TLS SNI is available for access.

**Example** To determine the category to which the following website URLS belong, use the command:

```
awplus# web-control categorize http://www.ebay.com
http://www.amazon.com
```

For each URL in the inquiry, the server responds with a web control category. If it cannot categorize the URL, it displays 'unknown category'.

```
awplus#web-control categorize http://www.ebay.com http://www.amazon.com
http://ebay.com ==> 54 (Online Auctions)
http://www.amazon.com ==> 55 (Online Shopping)
```

**Related commands** rule (web-control)

**Command changes** Version 5.4.7-2.1: command added

# 71 Application Awareness Commands

## Introduction

This chapter provides an alphabetical reference of commands used to configure application awareness, which uses Deep Packet Inspection (DPI). For more information about application awareness and a configuration example, see the Application Awareness Feature Overview and Configuration_Guide.

**Command List**


- "counters detailed" on page 3394
- "dpi" on page 3395
- "enable (dpi)" on page 3396
- "provider (dpi)" on page 3398
- "show dpi" on page 3399
- "show dpi statistics" on page 3401
- "show running-config dpi" on page 3403
- "update-interval (dpi)" on page 3404

# counters detailed

**Overview**

Use this command to enable the display of transmit and receive counters for each entity in DPI mode.

Once you have enabled detailed counters, you can use the command **show dpi statistics <entity-name>** to display statistics for different applications on individual entities (zones, networks or hosts). This is called DPI statistics per entity.

Use the **no** variant of this command to disable DPI statistics per entity.

**Syntax**

```
counters detailed
no counters detailed
```

**Default**

Disabled

**Mode**

DPI Configuration

**Usage notes**

These counters will require system resources and should only be configured when required. Use the **no** variant to turn them off when not required.

**Example**

To configure DPI statistics per entity, use the commands:

```
awplus# configure terminal
awplus(config)# dpi
awplus(config-dpi)# provider built-in
awplus(config-dpi)# enable
awplus(config-dpi)# counters detailed
```

To disable DPI statistics per entity, use the commands:

```
awplus# configure terminal
awplus(config)# dpi
awplus(config-dpi)# no counters detailed
```

**Related commands**

show dpi statistics

**Command changes**

Version 5.4.9-1.1: command added

# dpi

**Overview** Use this command to enter DPI Configuration mode to configure DPI for application awareness.

Use the **no** variant of this command to remove all DPI configuration.

**Syntax**

```
dpi
no dpi
```

**Mode** Global Configuration

**Usage notes** In DPI Configuration mode, you can:

- Set the DPI provider, using the provider (dpi) command.
- Enable DPI, using the enable (dpi) command.

**Examples** To begin configuring DPI, use the commands:

```
awplus# configure terminal
awplus(config)# dpi
awplus(config-dpi)#
```

To remove all DPI configuration, use the commands:

```
awplus# configure terminal
awplus(config)# no dpi
```

# enable (dpi)

**Overview**

Use this command to enable DPI for application awareness.

Use the **no** variant of this command to disable DPI without losing existing DPI configuration.

**Syntax**

```
enable
no enable
```

**Default**

DPI is disabled by default.

**Mode**

DPI Configuration

**Usage notes**

Use the provider (dpi) command to configure the DPI provider before enabling DPI.

When DPI is enabled, it can classify network traffic and identify today's most common applications.

DPI itself does not control or apply rules to the traffic. You can use the application awareness provided by DPI for:

- Network visibility
- Application Control, using the rule (firewall) command to enforce security policy and apply rules to the DPI applications
- Traffic Control, using the traffic control rules
- Policy-based Routing (PBR), using the PBR rules.

You can use the show dpi statistics command to show statistics for the applications being inspected by DPI.

For more information about configuring and using DPI, see the Application Awareness Feature_Overview and Configuration Guide .

**Examples**

To enable DPI to use the built-in library, use the commands:

```
awplus# configure terminal
awplus(configt)# dpi
awplus(config-dpi)# provider built-in
awplus(config-dpi)# enable
```

To disable DPI, use the commands:

```
awplus# configure terminal
awplus(config)# dpi
awplus(config-dpi)# no enable
```

**Related commands**

provider (dpi)

show dpi

show running-config dpi

# provider (dpi)

**Overview** Use this command to set the DPI provider for the library of applications used for DPI. Application Awareness uses DPI, if enabled, to identify applications by matching packets to a library of application signatures—either the up-to-date Procera library or the built-in library predefined in device's operating system.

**Syntax**

```
provider {procera|built-in}
```

| Parameter | Description |
|---|---|
| `procera` | Use the library provided and updated by Procera networks. |
| `built-in` | Use the library built into the device's operating system. |

**Default** No provider is set by default.

**Mode** DPI Configuration

**Usage notes** You can use the show application command and the show application detail command to view all applications that the device recognizes. If DPI is enabled, the show commands can include the commands in the library specified with this provider command.

Note that custom applications override DPI applications, which override AlliedWare Plus predefined applications. For more information about applications, see the application command.

Note that you need to use this command before using the enable (dpi) command to enable DPI.

You can use the show dpi command to view the provider's current version.

**Examples** To set the DPI provider to the built-in library of application signatures, use the commands:

```
awplus# configure terminal
awplus(config)# dpi
awplus(config-dpi)# provider built-in
awplus(config-dpi)# enable
```

**Related commands**

enable (dpi)

show application detail

show dpi

show running-config dpi

**Command changes** Version 5.4.7-2.1: **built-in** parameter added

# show dpi

**Overview** Use this command to show the DPI configuration state.

**Syntax** `show dpi`

**Mode** Privileged Exec

**Examples** To show information about the DPI configuration and provider's library, use the command:

```
awplus# show dpi
```

**Output** Figure 71-1: Example output from **show dpi** with DPI enabled and the provider set to **built-in**

```
awplus#show dpi
Status:      running
Provider:    built-in
```

Figure 71-2: Example output from **show dpi** with the provider set to **procera**, the subscription license active and DPI enabled

```
awplus#show dpi
Status:      running
Provider:    procera
Resource version:         1.0
Resource update interval: 1 hour
```

Figure 71-3: Example output from **show dpi** if the provider is set to **procera** but the subscription license is inactive

```
awplus#show dpi
Status:      unlicensed
Provider:    procera
Resource version:         not set
Resource update interval: 1 hour
```

Table 71-1: Parameters in the output from **show dpi**

| Parameter | Description |
|---|---|
| `Status` | The status of DPI:<br>• running—DPI is running — DPI is enabled, and the provided library is available<br>• disabled—DPI is disabled<br>• unlicensed—DPI is enabled, the provider is set to **procera**, but there is not a valid subscription license. |
| `Provider` | The provider for the library of application signatures used to identify applications. |
| `Resource version` | The version of the library supplied by the provider, if by subscription. |
| `Resource update interval` | The interval at which a check is made for a new version of the library of application signatures, updating it if a new version is available. |

**Related commands**

enable (dpi)

provider (dpi)

# show dpi statistics

**Overview** Use this command to display statistics for each application being inspected by DPI. This command gives you counts of the total number of packets and bytes of the applications being inspected by DPI. You can use the rule (firewall) command, traffic control rules or PBR rules to apply rules to the DPI applications.

You can also use this command to display application DPI statistics for an individual entity (zone, network or host). Enable this with the counters detailed command.

**Syntax** `show dpi statistics [<entity-name>]`

| Parameter | Description |
|---|---|
| *<entity-name>* | The name of an individual entity, for example the name of a zone, network or host. |

**Mode** Privileged Exec

**Examples** To display the statistics for each application being inspected by DPI, use the command:

```
awplus# show dpi statistics
```

**Output** Figure 71-4: Example output from the **show dpi statistics** command on the console.

```
awplus#show dpi statistics
Application  Packets            Bytes
-------------------------------------------------
http         30                 2020
icmp         348                29232
telnet       45                 2553
```

To show information about the DPI statistics for an individual entity, for example the entity “joeb”, use the command:

```
awplus# show dpi statistics joeb
```

Figure 71-5: Examples output from **show dpi statistics**

```
awplus#show dpi statistics joeb
Statistics for entity: joeb
Application   TX Packets    RX Packets      TX Bytes      RX Bytes
-----------------------------------------------------------------
youtube            15413         16542         15412      45123645
google             15413           654         12205        451254
facebook            4115          8153          1100        123588
twitter            15413          4865         35459         24236
```

Table 71-2: Parameters in the output from **show dpi statistics**

| Parameter | Description |
|---|---|
| Application | The application associated with the packet |
| TX Packets | Transmitted packets |
| RX Packets | Received packets |
| TX Bytes | Bytes transmitted |
| RX Bytes | Bytes received |

**Related commands**

counters detailed

**Command changes**

Version 5.4.7-2.1: command added

Version 5.4.9-1.1: entity parameter added

# show running-config dpi

**Overview** Use this command to show the configuration commands that have been used to configure DPI.

**Syntax**

```
show running-config dpi
```

**Mode** Privileged Exec

**Examples** To show the configuration commands that have been used to configure DPI, use the command:

```
awplus# show running-config dpi
```

**Output** Figure 71-6: Example output from the **show running-config dpi** command

```
awplus#show running-config dpi
dpi
 provider built-in
 enable
!
```

# update-interval (dpi)

**Overview**

Use this command to configure the update check interval for the DPI resource files if the provider is set to **procera**.

Use the **no** variant of this command to restore the default update check interval to 1 hour.

**Syntax**

```
update-interval {minutes <10-525600>|hours <1-8760>|days
<1-365>|weeks <1-52>|never}
```

```
no update-interval
```

| Parameter | Description |
|---|---|
| `minutes <10-525600>` | Update interval from 10 through 52600 minutes |
| `hours <1-8760>` | Update interval from 1 hour through 8760 hours |
| `days <1-365>` | Update interval from 1 day through 365 days |
| `weeks <1-52>` | Update interval from 1 week through 52 weeks |
| `never` | Never update the resource. |

**Default**

The default update interval is 1 hour.

**Mode**

DPI Mode

**Usage notes**

The Update Manager will perform an update check for a resource when triggered by an update check interval. It will request the current version number of the resource from the Update Server, then compare it with the current local version. If they are different, the Update Manager will initiate an update of the local resource.

Note that when a feature is disabled, regular and manual update checks for its resources are disabled.

Also note that an update check for a resource will not proceed if an update of that resource is already in progress.

**Examples**

To check and update the DPI resource files once a week, use the following command:

```
awplus(config-dpi)# update-interval weeks 1
```

To disable updating of the resource, use the following command:

```
awplus(config-dpi)# update-interval never
```

To restore the default update interval (1 hour), use the following command:

```
awplus(config-dpi)# no update-interval
```

**Related Command**

provider (dpi)

show resource

# 72 IP Reputation Commands

## Introduction

This chapter provides an alphabetical reference of commands used to configure AlliedWare Plus IP Reputation. For more information about IP Reputation and its configuration, see the IP Reputation sections contained within the Advanced Network Protection Feature Overview and Configuration Guide.

The table below lists the IP Reputation commands and their applicable modes.

Figure 72-1: IP Reputation Commands and Applicable Modes

| Mode | Command |
|---|---|
| Privileged Exec | show ip-reputation |
| | show ip-reputation categories |
| | show running-config ip-reputation |
| Global Configuration | ip-reputation |
| IP Reputation Mode | category action (IP Reputation) |
| | protect (IP Reputation) |
| | provider proofpoint (IP Reputation) |
| | update-interval (IP Reputation) |

**Command List**


- "category action (IP Reputation)" on page 3407
- "ip-reputation" on page 3409
- "protect (IP Reputation)" on page 3410
- "provider proofpoint (IP Reputation)" on page 3411
- "show ip-reputation" on page 3412
- "show ip-reputation categories" on page 3413

- "show running-config ip-reputation" on page 3415
- "update-interval (IP Reputation)" on page 3416
- "whitelist (IP Reputation)" on page 3418

# category action (IP Reputation)

**Overview** Use this command to configure an action for a specified category.

Use the **no** variant of this command to set action for a specified category to default, which is alert.

**Syntax**

```
category <category-name> action {alert|deny|disable}
no category <category-name> action
```

| Parameter | Description |
|---|---|
| `<category-name>` | Category name. A category contains a group of IP reputation criteria that are used to classify the nature of a host reputation. A host may have a reputation in multiple categories. You can use the show ip-reputation categories command to view the categories and their status. |
| `alert` | Generate a log message. This is the default action. |
| `deny` | Drop matching packets. No error message is sent back to the source host. |
| `disable` | Ignore a specified category. Ignored categories will not be used to categorize traffic. |

**Default** The default action is alert.

**Mode** IP Reputation Mode

**Usage notes** You can only configure the categories from the IP Reputation database provider, which is Proofpoint. You can use the show ip-reputation categories command to see the list of IP Reputation categories.

***NOTE:*** *Note that you should use the provider proofpoint (IP Reputation) command to configure the provider before configuring the action.*

**Examples** To drop packets categorized as P2P, use the commands:

```
awplus# configure terminal
awplus(config)# ip-reputation
awplus(config-ip-reputation)# provider proofpoint
awplus(config-ip-reputation)# category P2P action deny
```

To set the action for category P2P to default, use the commands:

```
awplus# configure terminal
awplus(config)# ip-reputation
awplus(config-ip-reputation)# no category P2P action
```

**Related commands**

show ip-reputation categories

show running-config ip-reputation

# ip-reputation

**Overview**

Use this command to configure IP Reputation.

Use the **no** variant of this command to remove all IP Reputation configuration.

**Syntax**

```
ip-reputation
no ip-reputation
```

**Mode**

Global Configuration

**Usage notes**

This command allows you to enter the IP Reputation mode. The command prompt for this mode is **awplus(config-ip-reputation)#**.

In the IP Reputation mode, you can:

- Set or remove the IP Reputation database provider, see the provider proofpoint (IP Reputation) command.
- Enable or disable IP Reputation protection, see the protect (IP Reputation) command.
- Configure the action for specified categories, see the category action (IP Reputation) command.

**Examples**

To configure IP Reputation, use the commands:

```
awplus# configure terminal
awplus(config)# ip-reputation
awplus(config-ip-reputation)#
```

To remove all IP Reputation configuration, use the commands:

```
awplus# configure terminal
awplus(config)# no ip-reputation
```

**Related commands**

show ip-reputation

show running-config ip-reputation

# protect (IP Reputation)

**Overview**

Use this command to enable IP Reputation protection.

Use the **no** variant of this command to disable IP Reputation protection without losing existing configuration.

Once IP Reputation protection is enabled, traffic will be categorized according to the available IP Reputation categories. See the show ip-reputation categories command for the list of available IP Reputation categories.

Note that you should use the provider proofpoint (IP Reputation) command to set the IP Reputation database provider before issuing this command.

**Syntax**

```
protect
no protect
```

**Default**

IP Reputation protection is disabled by default.

**Mode**

IP Reputation Mode

**Examples**

To enable IP Reputation protection, use the commands:

```
awplus# configure terminal
awplus(config)# ip-reputation
awplus(config-ip-reputation)# provider proofpoint
awplus(config-ip-reputation)# protect
```

To disable IP Reputation protection, use the commands:

```
awplus# configure terminal
awplus(config)# ip-reputation
awplus(config-ip-reputation)# no protect
```

**Related commands**

show ip-reputation

show running-config ip-reputation

# provider proofpoint (IP Reputation)

**Overview**

Use this command to set the IP Reputation database provider.

Proofpoint provides a database of IP reputation based on threat analysis. The database is regularly updated and can deliver the latest information of identified and potentially harmful IP addresses classified in categories.

If the provider is configured, you can use the show ip-reputation categories command to show the category details from the provider.

The default action for all categories is alert and you can use the category action (IP Reputation) command to set the action for a specified category.

**Syntax**

```
provider proofpoint
```

**Mode**

IP Reputation Mode

**Examples**

To set the IP Reputation database provider, use the commands:

```
awplus# configure terminal
awplus(config)# ip-reputation
awplus(config-ip-reputation)# provider proofpoint
```

**Related commands**

show ip-reputation

show running-config ip-reputation

show ip-reputation categories

# show ip-reputation

**Overview** Use this command to show the IP Reputation configuration state, including the IP Reputation database provider.

**Syntax**

```
show ip-reputation
```

**Mode** Privileged Exec

**Examples** To show the IP Reputation configuration state, use the command:

```
awplus# show ip-reputation
```

**Output** Figure 72-2: Example output from **show ip-reputation** if the IP Reputation subscription license is active.

```
awplus#show ip-reputation
Status:      Enabled (Active)
Events:      23
Provider:    Proofpoint
    Resource version: 1.0
    Entry count:      148357
    Status:           Enabled
Resource update interval: 1 hour
```

**Related commands** ip-reputation

**Command changes** Version 5.4.7-0.1: Event count added to the command output.

# show ip-reputation categories

**Overview** Use this command to show the IP Reputation category details.

Note that you need to use the provider proofpoint (IP Reputation) command to set the IP Reputation database provider before issuing this command.

**Syntax** `show ip-reputation categories`

**Mode** Privileged Exec

**Examples** To show the IP Reputation category details, use the command:

```
awplus# show ip-reputation categories
```

**Output** Figure 72-3: Example output from the **show ip-reputation categories** command

```
awplus#show ip-reputation categories

Category(* = invalid) Action    Description
------------------------------------------------------------------------------
AbusedTLD             alert     Abused or free TLD Related
Bitcoin_Related       alert     Bitcoin Mining and related
Blackhole             alert     Blackhole or Sinkhole systems
Bot                   alert     Known Infected Bot
Brute_Forcer          alert     SSH or other brute forcer
ChatServer            alert     POLICY Chat Server
CnC                   alert     Malware Command and Control Server
Compromised           alert     Known compromised or Hostile
DDoSAttacker          alert     DDoS Source
DriveBySrc            alert     Driveby Source
Drop                  alert     Drop site for logs or stolen credentials
DynDNS                alert     Domain or IP Related to a Dynamic DNS Entry
                                  or Request
EXE_Source            alert     Suspicious exe or dropper service
FakeAV                alert     Fake AV and AS Products
IPCheck               alert     IP Check Services
Mobile_CnC            alert     Known CnC for Mobile specific Family
Mobile_Spyware_CnC    alert     Spyware CnC specific to mobile devices
OnlineGaming          alert     Questionable Gaming Site
P2P                   alert     P2P Node
P2PCnC                alert     Distributed CnC Nodes
Parking               alert     Domain or SEO Parked
RemoteAccessService   alert     GoToMyPC and similar remote access services
Scanner               alert     Host Performing Scanning
Skype_SuperNode       alert     Observed Skype Bootstrap or Supernode
Spam                  alert     Known Spam Source
SpywareCNS            alert     Spyware Reporting Server
TorNode               alert     POLICY Tor Node
Undesirable           alert     Undesirable but not illegal
Utility               alert     Known Good Public Utility
VPN                   alert     VPN Server
```

**Related commands** category action (IP Reputation)

# show running-config ip-reputation

**Overview** Use this command to show the configuration commands that have been used to configure IP Reputation.

**Syntax**

```
show running-config ip-reputation
```

**Mode** Privileged Exec

**Examples** To show the commands that have been used to configure IP Reputation, use the command:

```
awplus# show running-config ip-reputation
```

**Output** Figure 72-4: Example output from **show running-config ip-reputation**

```
awplus#show running-config ip-reputation
ip-reputation
 category Scanner action deny
 provider proofpoint
 whitelist 192.0.2.5
 protect
!
```

**Related commands**

ip-reputation

show ip-reputation

whitelist (IP Reputation)

# update-interval (IP Reputation)

**Overview** Use this command to configure an update check interval for the IP Reputation resource files.

Use the **no** variant of this command to restore the default update check interval to 1 hour.

**Syntax**

```
update-interval {minutes <10-525600>|hours <1-8760>|days
<1-365>|weeks <1-52>|never}
```

```
no update-interval
```

| Parameter | Description |
|---|---|
| `minutes <10-525600>` | Update interval from 10 through 52600 minutes |
| `hours <1-8760>` | Update interval from 1 hour through 8760 hours |
| `days <1-365>` | Update interval from 1 day through 365 days |
| `weeks <1-52>` | Update interval from 1 week through 52 weeks |
| `never` | Never update the resource. If IP Reputation becomes enabled, the Update Manager will do update check and update the resource files if needed. Use the protect (IP Reputation) command to enable IP Reputation. |

**Default** The default update interval is 1 hour.

**Mode** IP Reputation Mode

**Usage notes** The Update Manager will perform an update check for a resource when triggered by an update check interval. It will request the current version number of the resource from the Update Server, then compare it with the current local version. If they are different, the Update Manager will initiate an update of the local resource.

Note that when a feature is disabled, regular and manual update checks for its resources are disabled.

Also note that an update check for a resource will not proceed if an update of that resource is already in progress.

**Examples** To check and update the IP Reputation resource files once a week, use the following command:

```
awplus(config-ip-reputation)# update-interval weeks 1
```

To disable updating of the resource, use the following command:

```
awplus(config-ip-repuation)# update-interval never
```

To restore the default update interval, which is 1 hour, use the following command:

```
awplus(config-ip-reputation)# no update-interval
```

**Related commands** show resource

# whitelist (IP Reputation)

**Overview**

Use this command to add an IP address to the IP Reputation whitelist.

Use the **no** variant of this command to remove an IP address from the whitelist.

**Syntax**

```
whitelist <ip-address>
no whitelist <ip-address>
```

| Parameter | Description |
|---|---|
| *<ip-address>* | The IPv4 address to add to or remove from the IP reputation whitelist, in dotted-decimal format. |

**Default**

There are no IP addresses in the IP reputation whitelist by default.

**Mode**

IP Reputation Configuration

**Usage notes**

If an IP address has acquired a bad reputation but, in spite of the risk, you still wish to be able to send traffic to or receive traffic from that address without it being alerted or denied, you can add that address to the IP Reputation whitelist. Use this **whitelist** command.

When the address no longer needs to be in the whitelist, we recommend removing it. Use the **no** variant of this command.

**Example**

To add IP address 192.0.2.5 to the IP reputation whitelist, use the commands:

```
awplus# configure terminal
awplus(config)# ip-reputation
awplus(config-ip-reputation)# whitelist 192.0.2.5
```

**Related commands**

ip-reputation

show running-config ip-reputation

**Command changes**

Version 5.4.9-2.1: command added

# 73 URL Offload Commands

## Introduction

**Overview**

This chapter provides an alphabetical reference of commands used to configure URL offload.

You can use these commands to bypass a VPN or proxy server for particular destinations, and then send this traffic direct to the Internet. Destinations to be bypassed (offloaded) are based on provided lists of endpoint URLs or IP addresses. You can both:

- manually configure particular endpoint URLs or IP entries that you want to offload, and
- configure a router to periodically fetch and filter URLs or IP entries from the Microsoft Office365 endpoint service.

The Microsoft Office endpoint service can then automatically update information about which URLs or IP addresses can be offloaded directly to the Internet. This speeds up access to Microsoft Office365 cloud services when your network architecture routes all traffic to a VPN or Proxy server by default.

For more information, see the URL Offload Feature Overview and Configuration Guide.

**Command List**


- "endpoint-source" on page 3421
- "entry (endpoint-manual)" on page 3423
- "exclude-entry (endpoint-manual)" on page 3425
- "exclude-entry (endpoint-office365)" on page 3427
- "filter-endpoint" on page 3429
- "filter-endpoint include all" on page 3432
- "filter-entry exclude" on page 3434
- "filter-entry exclude type" on page 3436
- "pac-file http-server port" on page 3438

- "pac-file proxy-address" on page 3440
- "pac-file template" on page 3441
- "parser-updates enable" on page 3443
- "parser-updates interval" on page 3444
- "service url-offload" on page 3445
- "show running-config url-offload" on page 3446
- "show url-offload endpoint-source" on page 3447
- "show url-offload endpoint-source manual entries" on page 3448
- "show url-offload endpoint-source office365 entries" on page 3450
- "show url-offload endpoint-source office365 raw-data" on page 3453
- "show url-offload pac-file" on page 3456
- "show url-offload pac-file template" on page 3460
- "update-interval (endpoint-office365)" on page 3462
- "url (endpoint office365)" on page 3463
- "url-offload" on page 3464
- "url-offload update-now" on page 3465

# endpoint-source

**Overview** Use this command to add a new URL offload endpoint source, or to enter the configuration mode for an existing endpoint source.

Use the **no** variant of this command to remove a URL offload endpoint source.

**Syntax**

```
endpoint-source <name> type {office365|manual}
no endpoint-source <name> type {office365|manual}
```

| Parameter | Description |
|---|---|
| *<name>* | This is the identifier name for the endpoint source. The identifier is unique to the source type. For example, it is possible to create two endpoints with the same name, as long as the type is different. |
| `office365` | Configure an endpoint source that uses the Microsoft office365 endpoint service. |
| `manual` | Configure an endpoint source that holds manually configured entries. |

**Default** No endpoint source name identifier or type is set.

**Mode** URL Offload Configuration

**Usage notes** This command adds a new endpoint source for URL offload. The endpoint source types supported are 'office365' and 'manual'.

Use the 'office365' type to fetch endpoints from the Microsoft Office365 endpoints service.

Use the 'manual' type to manually specify include entries for use with URL offload (see the entry (endpoint-manual) command).

This command enters a new configuration mode. From here you can enter the configuration needed for a specific endpoint type. The mode is dependent on the type of endpoint source.

**Example** To configure an office365 endpoint source using the name identifier 'test', use the commands:

```
awplus# configure terminal
awplus(config)# url-offload
awplus(config-url-offload)# endpoint-source test type office365
awplus(config-endpoint-office365)#
```

To configure a manual endpoint source using the name identifier 'test', use the commands:

```
awplus# configure terminal
awplus(config)# url-offload
awplus(config-url-offload)# endpoint-source test type manual
awplus(config-endpoint-manual)#
```

**Related commands**

show running-config url-offload

show url-offload endpoint-source

show url-offload endpoint-source manual entries

show url-offload endpoint-source office365 entries

show url-offload endpoint-source office365 raw-data

**Command changes**

Version 5.5.0-0.1: command added

# entry (endpoint-manual)

**Overview** Use this command to manually add endpoint entries to be included for URL offload. These entries are added to the '%%INCLUDE_CONDITION%%' section of the PAC file along with any other include entries from either manual or automatic sources.

Use the **no** variant of this command to remove the include entry from the endpoint entry list.

**Syntax**

```
entry {ip|ipv6|url} <value>
no entry {ip|ipv6|url} <value>
```

| Parameter | Description |
|---|---|
| `ip` | IPv4 prefix to include for URL offload |
| `ipv6` | IPv6 prefix to include for URL offload |
| `url` | URL to include for URL offload |
| `<value>` | IPv4 prefix, IPv6 prefix, or URL to include for URL offload |

**Default** No addresses are included for URL offload

**Mode** URL Offload Endpoint Manual Configuration

**Usage notes** To show the entries that are included for URL offload in the PAC file, use the **show url-offload pack-file** command. You will see the entries listed in the '%%INCLUDE_CONDITION%%' section of the PAC file.

**Examples** To include the endpoint entry URL 'test.example.com' in the inclusion list for URL offload under manual endpoint source 'test', use the commands:

```
awplus# configure terminal
awplus(config)# url-offload
awplus(config-url-offload)# endpoint-source test type manual
awplus(config-endpoint-manual)# entry url test.example.com
```

To remove the endpoint entry URL 'test.example.com', from the inclusion list for URL offload under manual endpoint source 'test', use the commands:

```
awplus# configure terminal
awplus(config)# url-offload
awplus(config-url-offload)# endpoint-source test type manual
awplus(config-endpoint-manual)# entry url test.example.com
```

To add the endpoint entry IP address '192.168.1.0/24' to the inclusion list for URL offload under manual endpoint source 'test', use the commands:

```
awplus# configure terminal
awplus(config)# url-offload
awplus(config-url-offload)# endpoint-source test type manual
awplus(config-endpoint-manual)# entry ip 192.168.0.1/24
```

**Related commands**

exclude-entry (endpoint-manual)

show running-config url-offload

show url-offload endpoint-source manual entries

show url-offload pac-file

**Command changes**

Version 5.5.0-0.1: command added

# exclude-entry (endpoint-manual)

**Overview** Use this command to exclude endpoint entries for URL offload. These entries are added to the '%%EXCLUDE_CONDITION%%' section of the PAC file to be processed before the include entries.

Use the **no** variant of this command to remove endpoint entries from the inclusion list for URL offload.

**Syntax**

```
exclude-entry {ip|ipv6|url} <value>
no exclude-entry {ip|ipv6|url} <value>
```

| Parameter | Description |
|---|---|
| `ip` | IPv4 prefix to exclude from URL offload |
| `ipv6` | IPv6 prefix to exclude from URL offload |
| `url` | URL to exclude from URL offload |
| *<value>* | IPv4 prefix, IPv6 prefix, or URL to exclude from URL offload |

**Default** No entries are excluded

**Mode** URL Offload Endpoint Manual Configuration

**Usage notes** The primary use for this command is if you want to exclude a specific entry that is part of a larger wildcard or subnet entry.

**Examples** To explicitly exclude 'example.facebook.com' from URL offload under manual endpoint source 'test', use the commands:

```
awplus# configure terminal
awplus(config)# url-offload
awplus(config-url-offload)# endpoint-source test type manual
awplus(config-endpoint-manual)# exclude-entry url
example.facebook.com
```

To remove the exclude entry that prevents 'example.facebook.com' from bypassing the VPN or proxy via URL offload under manual endpoint source 'test', use the commands:

```
awplus# configure terminal
awplus(config)# url-offload
awplus(config-url-offload)# endpoint-source test type manual
awplus(config-endpoint-manual)# no exclude-entry url
example.facebook.com
```

To include all entries for subnet 192.168.1.0/24 for URL offload except 192.168.1.2 under manual endpoint source 'test', use the commands:

```
awplus# configure terminal
awplus(config)# url-offload
awplus(config-url-offload)# endpoint-source test type manual
awplus(config-endpoint-manual)# entry ip 192.168.1.0/24
awplus(config-endpoint-manual)# exclude-entry ip
192.168.1.2/32
```

**Related commands**

exclude-entry (endpoint-office365)

entry (endpoint-manual)

show url-offload endpoint-source manual entries

show url-offload pac-file

show running-config url-offload

**Command changes**

Version 5.5.0-0.1: command added

# exclude-entry (endpoint-office365)

**Overview** Use this command to explicitly exclude particular endpoint entries for URL offload. These entries are added to the '%%EXCLUDE_CONDITION%%' section of the PAC file to be processed before the include entries.

Use the **no** variant of this command to remove endpoint entries from the inclusion list for URL offload.

**Syntax**

```
exclude-entry {ip|ipv6|url} <value>
no exclude-entry {ip|ipv6|url} <value>
```

| Parameter | Description |
|---|---|
| `ip` | IPv4 prefix to exclude from URL offload |
| `ipv6` | IPv6 prefix to exclude from URL offload |
| `url` | URL to exclude from URL offload |
| *<value>* | IPv4 prefix, IPv6 prefix, or URL to exclude from URL offload |

**Default** No entries are excluded

**Mode** URL Offload Endpoint Office365 Configuration

**Usage notes** The primary use for this command is to exclude a specific endpoint entry from an endpoint that is included. This command is functionally equivalent to creating an exclude entry as part of a manual source, but is included in the office365 configuration mode to logically group related entries.

**Examples** To explicitly exclude 'example.facebook.com' from URL offload under office365 endpoint source 'test', use the commands:

```
awplus# configure terminal
awplus(config)# url-offload
awplus(config-url-offload)# endpoint-source test type office365
awplus(config-endpoint-office365)# exclude-entry url
example.facebook.com
```

To remove the exclude entry that prevents 'example.facebook.com' from bypassing the VPN or proxy via URL offload under office365 endpoint source 'test', use the commands:

```
awplus# configure terminal
awplus(config)# url-offload
awplus(config-url-offload)# endpoint-source test type office365
awplus(config-endpoint-office365)# no exclude-entry url
example.facebook.com
```

**Related commands**

exclude-entry (endpoint-manual)

entry (endpoint-manual)

filter-endpoint include all

filter-entry exclude

filter-entry exclude type

show running-config url-offload

show url-offload endpoint-source manual entries

show url-offload endpoint-source office365 entries

show url-offload pac-file

**Command changes**

Version 5.5.0-0.1: command added

# filter-endpoint

**Overview** Use this command to filter the endpoints retrieved from the office365 endpoints service.

Use the **no** variant of this command to remove all filtering.

**Syntax**

```
filter-endpoint {include|exclude} key <key> boolean
{true|false}
filter-endpoint {include|exclude} key <key> string <value>
filter-endpoint {include|exclude} key <key> integer <value>
no filter-endpoint
```

| Parameter | Description |
|---|---|
| `include` | Include endpoints that have this key-value pair. |
| `exclude` | Exclude endpoints that have this key-value pair. |
| `key <key>` | The name of the key to filter on. The key that you use must exactly match the key in the Microsoft Endpoint data. |
| `boolean {true\|false}` | Specify that the key value is a boolean, and whether it is **true** or **false**. |
| `string <value>` | Specify that the key value is a string, and what the string is (for example 'Optimize'). |
| `integer <value>` | Specify that the key value is an integer, and what the integer is (for example 32). |

**Default** No filter entries are included

**Mode** URL Offload Endpoint Office365 Configuration

**Usage notes** The endpoints entries retrieved via this service are grouped into endpoints for a particular service and categorized using various 'key-value' pairs. These values are used to filter which endpoints are included for URL offload.

An example of a single endpoint is shown in the output below. At the time of this example the 'worldwide' endpoints list contained 146 endpoints.

Figure 73-1: Example output from **show url-offload endpoint-source office365 entries**

```
{
    "id": 1,
    "serviceArea": "Exchange",
    "serviceAreaDisplayName": "Exchange Online",
    "urls": [
      "outlook.office.com",
      "outlook.office365.com"
    ],
    "ips": [
      "13.107.6.152/31",
      "13.107.18.10/31",
      ...
      "2603:1006::/40",
      "2603:1016::/40",
      "2603:1026::/40",
       ...
      "2a01:111:f400::/48"
    ],
    "tcpPorts": "80,443",
    "expressRoute": true,
    "category": "Optimize",
    "required": true
   },
```

You can use include and exclude filters. Use include filters to include whole endpoints in the list (like the example above). Use exclude filters to remove whole endpoints from the list. Exclude filters override include filters.

In this feature, an office365 endpoint is a block like the one shown in the example above. An endpoint entry is a single URL or IP address. This command operates at the level of include or exclude whole endpoints.

## Examples

To include entries marked as required: true for endpoint source 'test', use the commands:

```
awplus# configure terminal
awplus(config)# url-offload
awplus(config-url-offload)# endpoint-source test type office365
awplus(config-endpoint-office365)# filter-endpoint include key
required boolean true
```

To include all entries except the entry with id: 32 for endpoint source 'test', use the commands:

```
awplus# configure terminal
awplus(config)# url-offload
awplus(config-url-offload)# endpoint-source test type office365
awplus(config-endpoint-office365)# filter-endpoint exclude key
id integer 32
```

To include entries marked as category: Optimize for endpoint source 'test', use the commands:

```
awplus# configure terminal
awplus(config)# url-offload
awplus(config-url-offload)# endpoint-source test type office365
awplus(config-endpoint-office365)# filter-endpoint include key
category string Optimize
```

**Related commands**

entry (endpoint-manual)

exclude-entry (endpoint-manual)

filter-endpoint include all

filter-entry exclude

filter-entry exclude type

show running-config url-offload

show url-offload endpoint-source

show url-offload endpoint-source manual entries

show url-offload endpoint-source office365 entries

show url-offload endpoint-source office365 raw-data

show url-offload pac-file

**Command changes**

Version 5.5.0-0.1: command added

# filter-endpoint include all

**Overview**

Use this command to include all endpoints from the office365 source. See the Usage notes below before using this command.

Use the **no** variant of this command to disable the inclusion of all endpoints from the office365 source.

**Syntax**

```
filter-endpoint include all
no filter-endpoint include all
```

**Default**

No endpoints are included

**Mode**

URL Offload Endpoint Office365 Configuration

**Usage notes**

Using this command without examining the result and explicitly excluding endpoint entries is not recommended. This is because this command includes URLs for a number of third-party services, for example, Facebook, Google and Dropbox.

Without this command or at least one other include filter, no endpoints will be included.

**Example**

To use all endpoints in the office365 endpoint information for the endpoint source 'test', use the commands:

```
awplus# configure terminal
awplus(config)# url-offload
awplus(config-url-offload)# endpoint-source test type office365
awplus(config-endpoint-office365)# filter-endpoint include all
```

To disable including all endpoints in the office365 endpoint information for the endpoint source 'test', use the commands:

```
awplus# configure terminal
awplus(config)# url-offload
awplus(config-url-offload)# endpoint-source test type office365
awplus(config-endpoint-office365)# no filter-endpoint include
all
```

**Related commands**

exclude-entry (endpoint-office365)

filter-endpoint

filter-entry exclude

filter-entry exclude type

show running-config url-offload

show url-offload endpoint-source

show url-offload endpoint-source office365 entries

show url-offload endpoint-source office365 raw-data

show url-offload pac-file

**Command changes**

Version 5.5.0-0.1: command added

# filter-entry exclude

**Overview** Use this command to filter out specific endpoint entries from the list of entries included for URL offload for an office365 endpoint source. The entries are removed from the list of entries stored for the source.

Use the **no** variant of this command to remove an entry from the list.

**Syntax**

```
filter-entry exclude {ip|ipv6|url} <value>
no filter-entry exclude {ip|ipv6|url} <value>
```

| Parameter | Description |
|---|---|
| `ip` | Filter out entries with the given IPv4 prefix |
| `ipv6` | Filter out entries with the given IPv6 prefix |
| `url` | Filter out entries with the given URL |
| `<value>` | The IPv4 prefix, IPv6 prefix, or URL to exclude. |

**Default** There is no default

**Mode** URL Offload Endpoint Office365 Configuration

**Examples** To filter out entries for 'www.example.com' from URL offload under office365 endpoint source 'test', use the commands:

```
awplus# configure terminal
awplus(config)# url-offload
awplus(config-url-offload)# endpoint-source test type office365
awplus(config-url-offload-office365)# filter-entry exclude url
www.example.com
```

To remove the filter entry 'www.example.com', use the commands:

```
awplus# configure terminal
awplus(config)# url-offload
awplus(config-url-offload)# endpoint-source test type office365
awplus(config-url-offload-office365)# no filter-entry exclude
url www.example.com
```

**Related commands**

entry (endpoint-manual)

exclude-entry (endpoint-office365)

filter-endpoint include all

filter-entry exclude type

show running-config url-offload

show url-offload endpoint-source office365 entries

show url-offload pac-file

**Command changes**

Version 5.5.0-0.1: command added

# filter-entry exclude type

**Overview** Use this command to explicitly exclude a particular endpoint entry type for URL offload. Entries of this type are removed from the entry list.

Use the **no** variant of this command to stop excluding entry types.

**Syntax**

```
filter-entry exclude type {url|ip|ipv6}
no filter-entry exclude type {url|ip|ipv6}
```

| Parameter | Description |
|---|---|
| `url` | Filter out URL entries |
| `ip` | Filter out IPv4 entries |
| `ipv6` | Filter out IPv6 entries |

**Default** All types are included

**Mode** URL Offload Endpoint Office365 Configuration

**Example** To exclude IP entries from being stored and included in the PAC file for office365 endpoint source 'test', use the commands:

```
awplus# configure terminal
awplus(config)# url-offload
awplus(config-url-offload)# endpoint-source test type office365
awplus(config-url-offload-office365)# filter-entry exclude ip
```

To stop excluding IP entries from being stored and included in the PAC file for office365 endpoint source 'test', use the commands:

```
awplus# configure terminal
awplus(config)# url-offload
awplus(config-url-offload)# endpoint-source test type office365
awplus(config-url-offload-office365)# no filter-entry exclude
ip
```

**Related commands**

entry (endpoint-manual)

exclude-entry (endpoint-office365)

filter-endpoint include all

filter-entry exclude

show running-config url-offload

show url-offload endpoint-source office365 entries

show url-offload pac-file

**Command changes** Version 5.5.0-0.1: command added

# pac-file http-server port

**Overview**

Use this command to set the HTTP port to use for serving URL offload PAC files.

Use the **no** variant of this command to disable serving URL offload PAC files.

**Syntax**

```
pac-file http-server port <port>
no pac-file http-server
```

| Parameter | Description |
|---|---|
| *<port>* | The port number you want to use to serve the PAC file, in the range 1 to 65535. |

**Default**

Disabled

**Mode**

URL Offload Configuration

**Usage notes**

Use this command to configure the router to serve Proxy Auto-Configuration (PAC) files that are generated by the URL offload feature. If configured, an HTTP service is provided on the configured port that serves a PAC file with the name extension 'wpad.dat'.

The port number may be the same as the main management HTTP web server, but if it is, requests may be redirected to the HTTPS secure port.

The main reason for choosing a non-default port number is to allow locking down access to the management HTTP server, to specific hosts without blocking the access that all clients need to download the PAC file.

***NOTE:*** *Attempting to assign a port that is bound to another service may cause your device to restart.*

**Examples**

To serve the PAC file on port 80, use the commands:

```
awplus# configure terminal
awplus(config)# url-offload
awplus(config-url-offload)# pac-file http-server port 80
```

To disable serving the PAC file on port 80, use the commands:

```
awplus# configure terminal
awplus(config)# url-offload
awplus(config-url-offload)# no pac-file http-server
```

**Related commands**

pac-file proxy-address

show running-config url-offload

show url-offload pac-file

show url-offload pac-file template

**Command changes** Version 5.5.0-0.1: command added

# pac-file proxy-address

**Overview**

Use this command to configure a proxy address to use in the Proxy Auto-Configuration (PAC) file generated by URL offload.

Use the **no** variant of this command to remove the configured proxy address.

**Syntax**

```
pac-file proxy-address <address>
no pac-file proxy-address
```

| Parameter | Description |
|---|---|
| *<address>* | Proxy address to use in the generated PAC file. We recommend to use an IP address, but you can also use a host name or URL. |

**Default**

No proxy address is set

**Mode**

URL Offload Configuration

**Usage notes**

Use this command to configure the proxy address to use in the PAC file generated by URL offload. This address is a text string. If you use a non-default PAC file template, it replaces the placeholder '%%PROXY_ADDRESS%%' in the template.

The proxy address can be a host name, URL, or IP address with a port number.

**Example**

To configure the proxy address 10.10.10.10 on port 8080, use the commands:

```
awplus# configure terminal
awplus(config)# url-offload
awplus(config-url-offload)# pac-file proxy-address
10.10.10.10:8080
```

To unset the proxy address 10.10.10.10 on port 8080, use the commands:

```
awplus# configure terminal
awplus(config)# url-offload
awplus(config-url-offload)# no pac-file proxy-address
```

**Related commands**

show running-config url-offload

show url-offload pac-file

show url-offload pac-file template

**Command changes**

Version 5.5.0-0.1: command added

# pac-file template

**Overview** Use this command to configure a custom (instead of the default) template to use for URL offload.

Use the **no** variant of this command to revert back to the default template to use for URL offload.

**Syntax**

```
pac-file template {local|remote} <url>
no pac-file template
```

| Parameter | Description |
|---|---|
| `local` | Use a template file stored on the local file system of your device |
| `remote` | Use a template file fetched via HTTP |
| *<url>* | For the local option, URLs must start with 'flash', 'usb' or 'card'. The file must exist at one of these locations.<br>For the remote option, a URL is used. No validation is performed on the URL, but the URL should point to a PAC file template with the required placeholders. |

**Default** Default PAC file template

**Mode** URL Offload Configuration

**Usage notes** The template can be stored in the file system of your device, or fetched from a remote server using HTTP. Both of these options cause the URL offload feature to fetch the template when updating the PAC file. A cached version of the template is used if multiple updates occur within a 1 minute time period.

The template must include two placeholders '%%EXCLUDE_MATCHES%%' and '%%INCLUDE_MATCHES%%'. These are replaced by the relevant condition statements. The template may also include the '%%PROXY_ADDRESS%%' placeholder. If it does, this is replaced by the proxy address configured using the command **pac-file proxy-address** in URL Offload Configuration mode.

***NOTE:*** *Exclude conditions should always be processed before include conditions.*

Using the command **show url-offload pac-file template** shows the contents of the template that is being used. Running this command before configuring a template shows the default template. The default template has an example of how to write a template.

**Example** To use the file 'pac_template.pac' in the device flash as the template, use the commands:

```
awplus# configure terminal
awplus(config)# url-offload
awplus(config-url-offload)# pac-file template local
flash:/pac_template.pac
```

To use the PAC file template 'remote_pac_template.pac' stored on a (reachable) HTTP server at 192.168.1.2, use the commands:

```
awplus# configure terminal
awplus(config)# url-offload
awplus(config-url-offload)# pac-file template remote
http://192.168.1.2/remote_pac_template.pac
```

To revert back to the default template, use the commands:

```
awplus# configure terminal
awplus(config)# url-offload
awplus(config-url-offload)# no pac-file template
```

**Related commands**

pac-file proxy-address

show running-config url-offload

show url-offload pac-file

show url-offload pac-file template

**Command changes**

Version 5.5.0-0.1: command added

# parser-updates enable

**Overview**

Use this command to enable automatic updates of the parsing functionality used by URL offload via the Allied Telesis Update Server.

Use the **no** variant of this command to disable automatic updates of the parsing functionality used by URL offload via the Allied Telesis Update Server.

**Syntax**

```
parser-updates enable
no parser-updates enable
```

**Default**

Disabled

**Mode**

URL Offload Configuration

**Example**

To enable the automatic updates, use the commands:

```
awplus# configure terminal
awplus(config)# url-offload
awplus(config-url-offload)# parser-updates enable
```

To disable the automatic updates, use the commands:

```
awplus# configure terminal
awplus(config)# url-offload
awplus(config-url-offload)# no parser-updates enable
```

**Related commands**

parser-updates interval

show running-config url-offload

**Command changes**

Version 5.5.0-0.1: command added

# parser-updates interval

**Overview**

Use this command to configure the parsing interval for periodic updates via the Allied Telesis update server.

Use the **no** variant of this command to set the interval back to the default (60 minutes).

**Syntax**

```
parser-updates interval {minutes <10-525600>|hours
<1-8760>|days <1-365>|weeks <1-52>}
```

```
no parser-updates interval
```

| Parameter | Description |
|---|---|
| `minutes <10-525600>` | Configure the interval in minutes, in the range 10 to 525600 |
| `hours <1-8760>` | Configure the interval in hours, in the range 1 to 8760 |
| `days <1-365>` | Configure the interval in days, in the range 1 to 365 |
| `weeks <1-52>` | Configure the interval in weeks, in the range 1 to 52 |

**Default**

60 minutes

**Mode**

URL Offload Configuration

**Examples**

To set the parser updates interval to 180 minutes, use the commands:

```
awplus# configure terminal
awplus(config)# url-offload
awplus(config-url-offload)# parser-updates interval minutes 180
```

To set the parser updates interval back to the default value (60 minutes), use the commands:

```
awplus# configure terminal
awplus(config)# url-offload
awplus(config-url-offload)# no parser-updates interval
```

**Related commands**

parser-updates enable

show running-config url-offload

**Command changes**

Version 5.5.0-0.1: command added

# service url-offload

**Overview**

Use this command to enable the URL offload service.

Use the **no** version of the command to disable the URL offload service if it is unused.

**Syntax**

```
service url-offload
no service url-offload
```

**Default**

Enabled

**Mode**

Global Configuration

**Usage notes**

Sometimes it may be desirable to disable unused services, in order to reduce memory use. This command lets you disable the URL offload service.

**Example**

To disable the URL offload service, use the commands:

```
awplus# configure terminal
awplus(config)# no service url-offload
```

**Command changes**

Version 5.5.0-0.1: command added

# show running-config url-offload

**Overview** Use this command to show the current configuration for the URL offload feature.

**Syntax**

```
show running-config url-offload
```

**Mode** Privileged Exec

**Example** To show the current URL offload configuration, use the command:

```
awplus# show running-config url-offload
```

**Output** Figure 73-2: Example output from **show running-config url-offload**

```
url-offload
 endpoint-source test type office365
  url https://endpoints.office.com/endpoints/worldwide
  update-interval hours 1
  filter-endpoint include key category string Optimize
  filter-entry exclude type ip
 pac-file proxy-address 10.10.10.10:8080
 pac-file http-server port 80
 pac-file template local flash:/wpad.template
!
```

**Related commands**

show url-offload endpoint-source manual entries

show url-offload endpoint-source office365 entries

show url-offload endpoint-source office365 raw-data

show url-offload pac-file

**Command changes** Version 5.5.0-0.1: command added

# show url-offload endpoint-source

**Overview** Use this command to show information about configured URL offload endpoint sources.

**Syntax**

```
show url-offload endpoint-source
```

**Mode** Privileged Exec

**Usage notes** For Office365 type sources, the name, URL, update interval and last update time are shown. For manual type sources, only the name is shown.

**Example** To show information about configured URL offload endpoint sources, use the commands:

```
awplus# show url-offload endpoint-source
```

**Output** Figure 73-3: Example output from **show url-offload endpoint-source**

```
awplus#show url-offload endpoint-source

Microsoft Office365 endpoint sources:

Name: test
 URL: https://endpoints.office.com/endpoints/worldwide
 Update interval: 1 hours
 Update time: 2019-10-02T12:56:21Z

Manual endpoint sources:

Name: manual_test
```

**Related commands** endpoint-source

update-interval (endpoint-office365)

url-offload

**Command changes** Version 5.5.0-0.1: command added

# show url-offload endpoint-source manual entries

**Overview** Use this command to show endpoint entries for a URL offload manual endpoint source. Manually configured entries attached to an endpoint source are displayed.

**Syntax**

```
show url-offload endpoint-source manual entries
show url-offload endpoint-source manual <name> entries
```

| Parameter | Description |
|---|---|
| *<name>* | The name of the manual endpoint source, for example 'test'. |

**Mode** Privileged Exec

**Usage notes** Use the optional parameter to display a specific endpoint source by its *<name>*. If no parameter is used, then all endpoint entries for all manual endpoint sources are displayed.

**Examples** To show endpoint entries for manual endpoint source 'test', use the command:

```
awplus# show url-offload endpoint-source manual test entries
```

To show endpoint entries for all manual endpoint sources, use the command:

```
awplus# show url-offload endpoint-source manual entries
```

**Output** Figure 73-4: Example output from **show url-offload endpoint-source manual test entries**

```
awplus#show url-offload endpoint-source manual test entries
Name: test

Include Entries:
 Type: url
 Value: *.example.com

 Type: ip
 Value: 192.168.1.0/24

Exclude Entries:
 Type: url
 Value: test.example.com

 Type: ip
 Value: 192.168.1.1/32
```

**Related commands** entry (endpoint-manual)

**Command changes** Version 5.5.0-0.1: command added

# show url-offload endpoint-source office365 entries

**Overview** Use this command to show endpoint entries for office365 endpoints.

**Syntax**

```
show url-offload endpoint-source office365 <name> entries
[filtered|unusable]
```

```
show url-offload endpoint-source office365 entries
[filtered|unusable]
```

| Parameter | Description |
|---|---|
| *<name>* | This is the name of an endpoint source, for example 'test'. If you do not use this parameter, then all endpoint sources are displayed. |
| `filtered` | Use this parameter to show entries that are included, or explicitly excluded, for this source. |
| `unusable` | Use this parameter to show URLs and IPs from the endpoint information that can not be used to create entries. For example, this is usually because there is a missing full stop after a wildcard. |

**Mode** Privileged Exec

**Usage notes** Entries that are displayed using this command are parsed from the information fetched from the endpoint service. You can show all parsed entries, or only entries that are included or excluded using the **filtered** parameter.

**Examples** To show all the parsed endpoint entries for the endpoint source 'test', use the command:

```
awplus# show url-offload endpoint-source office365 test entries
```

To show endpoint entries specifically included or excluded for the endpoint source 'test', use the command:

```
awplus# show url-offload endpoint-source office365 test entries
filtered
```

To show endpoint entries that can't be parsed for the endpoint source 'test', use the command:

```
awplus# show url-offload endpoint-source office365 test entries
unusable
```

**Output** Figure 73-5: Example output from **show url-offload endpoint-source office365 test entries filtered**

```
awplus#show url-offload endpoint-source office365 test entries filtered
Endpoint source: test
Include entries:
Type  Value
--------------------------------------------------------------------------------
ip    13.107.6.152/31
ip    13.107.18.10/31
...
ip    150.171.40.0/22
ip    191.234.140.0/22
ip    204.79.197.215/32
ipv6  2603:1006::/40
...
ipv6  2a01:111:f402::/48
url   *.sharepoint.com
url   outlook.office.com
url  outlook.office365.com

Exclude entries:
Type  Value
--------------------------------------------------------------------------------
url   mobile.facebook.com
```

Figure 73-6: Example output from **show url-offload endpoint-source office365 test entries unusable**

```
awplus#show url-offload endpoint-source office365 test entries unusable
Endpoint source: test
Unusable entries
--------------------------------------------------------------------------------
*-files.sharepoint.com
*-myfiles.sharepoint.com
*broadcast.officeapps.live.com
*cdn.onenote.net
*excel.officeapps.live.com
*onenote.officeapps.live.com
*powerpoint.officeapps.live.com
*rtc.officeapps.live.com
*shared.officeapps.live.com
*view.officeapps.live.com
*visio.officeapps.live.com
*word-edit.officeapps.live.com
*word-view.officeapps.live.com
```

**Related commands**

exclude-entry (endpoint-office365)

filter-endpoint

filter-endpoint include all

filter-entry exclude

filter-entry exclude type

show url-offload endpoint-source office365 raw-data

**Command changes** Version 5.5.0-0.1: command added

# show url-offload endpoint-source office365 raw-data

**Overview** Use this command to show the raw JSON data fetched from the Microsoft Office365 endpoint service for diagnostic and configuration debug purposes.

**Syntax**

```
show url-offload endpoint-source office365 <name> raw-data
```

| Parameter | Description |
|---|---|
| *<name>* | This is the name of an endpoint source, for example 'test'. If you do not use this parameter, then all endpoint sources are displayed. |

**Mode** Privileged Exec

**Usage notes** Use this command to work out what filtering you require. The output is quite long.

**Example** To show raw JSON data fetched from the office365 endpoint source 'test', use the command:

```
awplus# show url-offload endpoint-source office365 test
raw-data
```

**Output** Figure 73-7: Example output from **show url-offload endpoint-source office365 raw-data**

```
awplus#show url-offload endpoint-source office365 test raw-data
[
  {
    "id": 1,
    "serviceArea": "Exchange",
    "serviceAreaDisplayName": "Exchange Online",
    "urls": [
      "outlook.office.com",
      "outlook.office365.com"
    ],
    "ips": [
      "13.107.6.152/31",
      "13.107.18.10/31",
      "13.107.128.0/22",
      "40.96.0.0/13",
      "40.104.0.0/15",
      "52.96.0.0/14",
      "131.253.33.215/32",
      "132.245.0.0/16",
      "191.234.140.0/22",
      "204.79.197.215/32",
      "2603:1006::/40",
      "2603:1016::/40",
      "2603:1026::/40",
      "2603:1026:200::/39",
      "2603:1026:400::/39",
      "2603:1026:620::/44",
      "2603:1026:800::/44",
      "2603:1036::/39",
...
    ],
    "tcpPorts": "80,443",
    "expressRoute": true,
    "category": "Optimize",
    "required": true
  },
  {
    "id": 2,
...
  },
  {
    "id": 146,
    "serviceArea": "Skype",
    "serviceAreaDisplayName": "Skype for Business Online and
Microsoft Teams",
    "urls": [
      "statics.teams.microsoft.com"
    ],
    "tcpPorts": "443",
    "expressRoute": false,
    "category": "Default",
    "required": true
  }
]
```

**Related commands**

filter-endpoint

filter-endpoint include all

filter-entry exclude

filter-entry exclude type

**Command changes**

Version 5.5.0-0.1: command added

# show url-offload pac-file

**Overview** Use this command to show the contents of the Proxy Auto-Configuration (PAC) file generated by the URL offload feature.

**Syntax** `show url-offload pac-file`

**Mode** Privileged Exec

**Example** To show the contents of the PAC file generated by URL offload, use the command:

```
awplus# show url-offload pac-file
```

**Output** Figure 73-8: Example output from **show url-offload pac-file**

```
awplus#show url-offload pac-file
function UO_dnsResolve(host)
{
    return (typeof dnsResolveEx === "function" ? dnsResolveEx(host):
                                                 dnsResolve(host));
}

function UO_isInNet(host_ips, network, mask, full_addr)
{
    const addrList = host_ips.split(";");
    for(let i = 0; i < addrList.length; i++)
    {
        const match = (typeof isInNetEx === "function" ?
                            isInNetEx(addrList[i], full_addr):
                            isInNet(addrList[i], network, mask));
        if (match)
        {
            return true;
        }
    }
    return false;
}
```

```
function FindProxyForURLEx(url, host)
{
    var direct = "DIRECT";
    var proxyServer = "PROXY ";


    /* Host is on local network (no dots in name) */
    if (isPlainHostName (host))
    {
        return direct;
    }

    /* Exclude matches */
    if(shExpMatch (host, "exclude.example.com"))
    {
        return proxyServer;
    }

    /* Include matches */
    if(shExpMatch (host, "*.example.com")
       || shExpMatch (host, "*.sharepoint.com")
       || shExpMatch (host, "outlook.office.com")
       || shExpMatch (host, "outlook.office365.com")
       || (isResolvable(host) && (host_ips = UO_dnsResolve(host))
           && (UO_isInNet(host_ips, "13.107.6.152", "255.255.255.254",
"13.107.6.152/31")
               || UO_isInNet(host_ips, "13.107.18.10", "255.255.255.254",
"13.107.18.10/31")
               || UO_isInNet(host_ips, "13.107.64.0", "255.255.192.0",
"13.107.64.0/18")
               || UO_isInNet(host_ips, "13.107.128.0", "255.255.252.0",
"13.107.128.0/22")
               || UO_isInNet(host_ips, "13.107.136.0", "255.255.252.0",
"13.107.136.0/22")
               || UO_isInNet(host_ips, "23.103.160.0", "255.255.240.0",
"23.103.160.0/20")
               || UO_isInNet(host_ips, "40.96.0.0", "255.248.0.0", "40.96.0.0/13")
               || UO_isInNet(host_ips, "40.104.0.0", "255.254.0.0", "40.104.0.0/15")
               || UO_isInNet(host_ips, "40.108.128.0", "255.255.128.0",
"40.108.128.0/17")
               || UO_isInNet(host_ips, "52.96.0.0", "255.252.0.0", "52.96.0.0/14")
               || UO_isInNet(host_ips, "52.104.0.0", "255.252.0.0", "52.104.0.0/14")
               || UO_isInNet(host_ips, "52.112.0.0", "255.252.0.0", "52.112.0.0/14")
               || UO_isInNet(host_ips, "104.146.128.0", "255.255.128.0",
"104.146.128.0/17")
               || UO_isInNet(host_ips, "131.253.33.215", "255.255.255.255",
"131.253.33.215/32")
               || UO_isInNet(host_ips, "132.245.0.0", "255.255.0.0",
"132.245.0.0/16")
               || UO_isInNet(host_ips, "150.171.32.0", "255.255.252.0",
"150.171.32.0/22")
               || UO_isInNet(host_ips, "150.171.40.0", "255.255.252.0",
"150.171.40.0/22")
               || UO_isInNet(host_ips, "191.234.140.0", "255.255.252.0",
"191.234.140.0/22")
```

```
                || UO_isInNet(host_ips, "191.234.140.0", "255.255.252.0",
"191.234.140.0/22")
                || UO_isInNet(host_ips, "204.79.197.215", "255.255.255.255",
"204.79.197.215/32")
                || UO_isInNet(host_ips, "2603:1006::", "40", "2603:1006::/40")
                || UO_isInNet(host_ips, "2603:1016::", "36", "2603:1016::/36")
                || UO_isInNet(host_ips, "2603:1026::", "36", "2603:1026::/36")
                || UO_isInNet(host_ips, "2603:1036::", "36", "2603:1036::/36")
                || UO_isInNet(host_ips, "2603:1046::", "36", "2603:1046::/36")
                || UO_isInNet(host_ips, "2603:1056::", "36", "2603:1056::/36")
                || UO_isInNet(host_ips, "2603:1096::", "38", "2603:1096::/38")
                || UO_isInNet(host_ips, "2603:1096:400::", "40",
"2603:1096:400::/40")
                || UO_isInNet(host_ips, "2603:1096:600::", "40",
"2603:1096:600::/40")
                || UO_isInNet(host_ips, "2603:1096:a00::", "39",
"2603:1096:a00::/39")
                || UO_isInNet(host_ips, "2603:1096:c00::", "40",
"2603:1096:c00::/40")
                || UO_isInNet(host_ips, "2603:10a6:200::", "40",
"2603:10a6:200::/40")
                || UO_isInNet(host_ips, "2603:10a6:400::", "40",
"2603:10a6:400::/40")
                || UO_isInNet(host_ips, "2603:10a6:600::", "40",
"2603:10a6:600::/40")
                || UO_isInNet(host_ips, "2603:10a6:800::", "40",
"2603:10a6:800::/40")
                || UO_isInNet(host_ips, "2603:10d6:200::", "40",
"2603:10d6:200::/40")
                || UO_isInNet(host_ips, "2620:1ec:4::152", "128",
"2620:1ec:4::152/128")
                || UO_isInNet(host_ips, "2620:1ec:4::153", "128",
"2620:1ec:4::153/128")
                || UO_isInNet(host_ips, "2620:1ec:c::10", "128",
"2620:1ec:c::10/128")
                || UO_isInNet(host_ips, "2620:1ec:c::11", "128",
"2620:1ec:c::11/128")
                || UO_isInNet(host_ips, "2620:1ec:d::10", "128",
"2620:1ec:d::10/128")
                || UO_isInNet(host_ips, "2620:1ec:d::11", "128",
"2620:1ec:d::11/128")
                || UO_isInNet(host_ips, "2620:1ec:8f0::", "46", "2620:1ec:8f0::/46")
                || UO_isInNet(host_ips, "2620:1ec:8f8::", "46", "2620:1ec:8f8::/46")
                || UO_isInNet(host_ips, "2620:1ec:900::", "46", "2620:1ec:900::/46")
                || UO_isInNet(host_ips, "2620:1ec:908::", "46", "2620:1ec:908::/46")
                || UO_isInNet(host_ips, "2620:1ec:a92::152", "128",
"2620:1ec:a92::152/128")
                || UO_isInNet(host_ips, "2620:1ec:a92::153", "128",
"2620:1ec:a92::153/128")
                || UO_isInNet(host_ips, "2a01:111:f400::", "48",
"2a01:111:f400::/48")
                || UO_isInNet(host_ips, "2a01:111:f402::", "48",
"2a01:111:f402::/48"))))
```

```
    {
        return direct;
    }

    return proxyServer;
}

function FindProxyForURL(url, host)
{
    return FindProxyForURLEx (url, host);
}
```

**Related commands**

entry (endpoint-manual)

exclude-entry (endpoint-manual)

exclude-entry (endpoint-office365)

filter-entry exclude type

pac-file proxy-address

pac-file template

**Command changes**

Version 5.5.0-0.1: command added

# show url-offload pac-file template

**Overview** Use this command to show the template that is currently used to generate the Proxy Auto-Configuration (PAC) file for the URL offload feature.

**Syntax**

```
show url-offload pac-file template
```

**Mode** Privileged Exec

**Usage notes** The template must include two placeholders '%%EXCLUDE_MATCHES%%' and '%%INCLUDE_MATCHES%%'. These are replaced by the relevant condition statements. The template may also include the '%%PROXY_ADDRESS%%' placeholder. If it does, this is replaced by the proxy address configured using the command **pac-file proxy address** in URL Offload Configuration mode.

***NOTE:*** *Exclude conditions should always be processed before include conditions.*

The default template can be shown, and then used as an example when writing a different template.

**Example** To display the default template that is currently in use, use the command:

```
awplus# show url-offload pac-file template
```

**Output** Figure 73-9: Example output from **show url-offload pac-file template**

```
awplus#show url-offload pac-file template

function FindProxyForURLEx(url, host)
{
    var direct = "DIRECT";
    var proxyServer = "PROXY %%PROXY_ADDRESS%%";


    /* Host is on local network (no dots in name) */
    if (isPlainHostName (host))
    {
        return direct;
    }

    /* Exclude matches */
    if(%%EXCLUDE_MATCHES%%)
    {
        return proxyServer;
    }

    /* Include matches */
    if(%%INCLUDE_MATCHES%%)
    {
        return direct;
    }

    return proxyServer;
}

function FindProxyForURL(url, host)
{
    return FindProxyForURLEx (url, host);
}
```

**Related commands**

pac-file proxy-address

pac-file template

show running-config url-offload

show url-offload pac-file

**Command changes** Version 5.5.0-0.1: command added

# update-interval (endpoint-office365)

**Overview**

Use this command to configure the update interval for URL offload office365 endpoints.

Use the **no** variant of this command to disable automatic updating for URL offload office365 endpoints. You can use the **url-offload update-now** command to update the endpoints if you want to.

**Syntax**

```
update-interval {days <1-30>|hours <1-720>|minutes <1-43200>}
no update-interval
```

| Parameter | Description |
|---|---|
| `days <1-30>` | Specify the update interval in days, in the range 1 to 30 |
| `hours <1-720>` | Specify the update interval in hours, in the range 1 to 720 |
| `minutes <1-43200>` | Specify the update interval in minutes, in the range 1 to 43200 |

**Default**

Disabled

**Mode**

URL Offload Endpoint Office365 Configuration

**Examples**

To update the endpoint source 'test' at hourly intervals, use the commands:

```
awplus# configure terminal
awplus(config)# url offload
awplus(config-url-offload)# endpoint-source test type office365
awplus(config-endpoint-office365)# update-interval hours 1
```

To disable automatic updates, use the commands:

```
awplus# configure terminal
awplus(config)# url offload
awplus(config-url-offload)# endpoint-source test type office365
awplus(config-endpoint-office365)# no update-interval
```

**Related commands**

show running-config url-offload

show url-offload endpoint-source

url-offload update-now

**Command changes**

Version 5.5.0-0.1: command added

# url (endpoint office365)

**Overview**

Use this command to set the URL to use as the source for the office365 endpoint service.

Use the **no** variant of this command to remove the configured URL as the source for the office365 endpoints service.

**Syntax**

```
url <url>
no url
```

| Parameter | Description |
|---|---|
| *<url>* | The URL address to use to fetch the JSON data from the office365 endpoints service. |

**Default**

No URL is configured

**Mode**

URL Offload Endpoint Office365 Configuration

**Examples**

To configure the URL so you can use the office365 endpoint service, use the commands:

```
awplus# configure terminal
awplus(config)# url-offload
awplus(config-url-offload)# endpoint-source test type office365
awplus(config-endpoint-office365)# url
https://endpoints.office.com/endpoints/worldwide
```

To remove the configured URL for the office365 endpoint service, use the commands:

```
awplus# configure terminal
awplus(config)# url-offload
awplus(config-url-offload)# endpoint-source test type office365
awplus(config-endpoint-office365)# no url
```

**Related commands**

show running-config url-offload

show url-offload endpoint-source

**Command changes**

Version 5.5.0-0.1: command added

# url-offload

**Overview** Use this command to enter configuration mode for the URL offload feature.

**Syntax** `url-offload`

**Mode** Global Configuration

**Usage notes** URL offload allows you to divert particular URL traffic directly to the Internet, rather than sending it to a proxy server or VPN.

**Example** To enter configuration mode for the URL offload feature, use the commands:

```
awplus# configure terminal
awplus(config)# url-offload
awplus(config-url-offload)#
```

**Related commands** show running-config url-offload

**Command changes** Version 5.5.0-0.1: command added

# url-offload update-now

**Overview**

Use this command to trigger an immediate update of all URL offload endpoints. The latest endpoint data is fetched and the PAC file is regenerated.

**Syntax**

```
url-offload update-now
```

**Mode**

Privileged Exec

**Example**

To trigger an immediate update of all URL offload endpoint data, use the command:

```
awplus# url-offload update-now
```

**Related commands**

show running-config url-offload

show url-offload pac-file

**Command changes**

Version 5.5.0-0.1: command added

# Part 10: Virtual Private Networks (VPNs)

# 74 IPsec Commands

## Introduction

**Overview**

This chapter provides an alphabetical reference of commands used to configure Internet Protocol Security (IPsec) tunnel.

For introductory information about IPsec tunnel in AlliedWare Plus, including overview and configuration information, see the:

- Internet Protocol Security (IPsec) Feature Overview and_Configuration Guide
- GRE and Multipoint VPNs Feature Overview and Configuration Guide

**Command List**


- "clear isakmp sa" on page 3469
- "crypto ipsec profile" on page 3470
- "crypto isakmp key" on page 3472
- "crypto isakmp peer" on page 3475
- "crypto isakmp profile" on page 3477
- "debug isakmp" on page 3479
- "dpd-interval" on page 3481
- "dpd-timeout" on page 3482
- "interface tunnel (IPsec)" on page 3483
- "lifetime (IPsec Profile)" on page 3484
- "lifetime (ISAKMP Profile)" on page 3485
- "no debug isakmp" on page 3486
- "pfs" on page 3487
- "rekey" on page 3489
- "show debugging isakmp" on page 3490
- "show interface tunnel (IPsec)" on page 3491

- "show ipsec counters" on page 3492
- "show ipsec peer" on page 3493
- "show ipsec policy" on page 3494
- "show ipsec profile" on page 3495
- "show ipsec sa" on page 3497
- "show isakmp counters" on page 3498
- "show isakmp key (IPsec)" on page 3499
- "show isakmp peer" on page 3500
- "show isakmp profile" on page 3501
- "show isakmp sa" on page 3503
- "transform (IPsec Profile)" on page 3504
- "transform (ISAKMP Profile)" on page 3505
- "tunnel destination (IPsec)" on page 3507
- "tunnel local name (IPsec)" on page 3509
- "tunnel local selector" on page 3510
- "tunnel mode ipsec" on page 3512
- "tunnel protection ipsec (IPsec)" on page 3513
- "tunnel remote name (IPsec)" on page 3514
- "tunnel remote selector" on page 3515
- "tunnel security-reprocessing" on page 3517
- "tunnel selector paired" on page 3518
- "tunnel source (IPsec)" on page 3519
- "undebug isakmp" on page 3521
- "version (ISAKMP)" on page 3522

# clear isakmp sa

**Overview** Use this command to delete Internet Security Association Key Management Protocol (ISAKMP) Security Associations (SAs). SAs specify the Security Parameter Index (SPI), protocols, algorithms and keys for protecting a single flow of traffic between two IPSec peers. For more information about SA, see the Internet Protocol Security (IPSec) Feature Overview and Configuration Guide.

**Syntax**

```
clear [crypto] isakmp sa [peer <ipv4-addr>|<ipv6-addr>|
<hostname>] [force]
```

| Parameter | Description |
|---|---|
| *<ipv4-addr>* | Destination IPv4 address. The IPv4 address uses the format A.B.C.D. |
| *<ipv6-addr>* | Destination IPv6 address. The IPv4 address uses the format X:X::X:X. |
| *<hostname>* | Destination host name. |
| `force` | Force to clear ISAKMP SAs without negotiating with the peer. |

**Mode** Privileged Exec

**Examples** To delete the ISAKMP security associations at the peer for an IPv6 address, use the command:

```
awplus# clear isakmp sa peer 2001:0db8::1
```

To delete the ISAKMP security associations at the peer for an IPv4 address, use the command:

```
awplus# clear isakmp sa peer 192.168.2.1
```

To delete the ISAKMP security associations at the peer for a host name, use the command:

```
awplus# clear isakmp sa peer remote.example.com
```

**Related commands** crypto isakmp key

show isakmp sa

**Command Changes** Version 5.4.7-0.1: Parameter <hostname> added for DDNS feature.

# crypto ipsec profile

**Overview** Use this command to configure a custom IPsec profile.

An IPsec profile comprises one or more transforms that can be configured by using the transform (IPsec Profile) command.

Use the **no** variant to delete a previously created profile.

**Syntax**

```
crypto ipsec profile <profile_name>
no crypto ipsec profile <profile_name>
```

| Parameter | Description |
|---|---|
| *<profile_name>* | Profile name. Profile names are case insensitive and can be up to 64 characters long composed of printable ASCII characters. Profile names can have only letters from a to z and A to Z, numbers from 0 to 9, - (dash), or _ (underscore). |

**Default** The default IPsec profile with transforms in order of preference is listed in the following table. Which IPsec profile will actually be used depends on how the negotiation between the peers is carried out when establishing the connection. Note that you cannot delete or edit the default profile. Expiry time of 8 hours applies to the default IPsec profile.

Table 74-1: IPsec default profile

| Attribute | Transform 1 | Transform 2 | Transform 3 | Transform 4 | Transform 5 | Transform 6 |
|---|---|---|---|---|---|---|
| Protocol | ESP | ESP | ESP | ESP | ESP | ESP |
| Encryption (all CBC) | AES256 | AES256 | AES128 | AES128 | 3DES | 3DES |
| Integrity (all HMAC) | SHA256 | SHA1 | SHA256 | SHA1 | SHA256 | SHA1 |

**Mode** Global Configuration

**Examples** To configure a custom IPsec profile for establishing IPSec SAs with a remote peer, use the following commands:

```
awplus# configure terminal
awplus(config)# crypto ipsec profile my_profile
awplus(config-ipsec-profile)# transform 2 protocol esp
integrity sha1 encryption 3des
```

To delete a custom profile, use the following commands:

```
awplus# configure terminal
awplus(config)# no crypto ipsec profile my_profile
```

**Related commands**

lifetime (IPsec Profile)

show ipsec profile

transform (IPsec Profile)

# crypto isakmp key

**Overview**

Use this command to configure an ISAKMP authentication key. These keys can be of type Pre-shared Key (PSK) or Extensible Authentication Protocol (EAP). Keys are stored encrypted in the running-configuration.

You must configure this key whenever you specify authentication keys in an (Internet Key Exchange) IKE policy and at both peers.

This command specifies both the value of the key and also an identifier (the hostname, address or policy parameters). This identifier is used to decide which key to use for a particular ISAKMP message exchange.

See the Usage section below for more information, and see the following guides for examples:

- Internet Protocol Security (IPsec) Feature Overview and_Configuration Guide
- GRE and Multipoint VPNs Feature Overview and Configuration Guide

Use the **no** variant to remove a key.

**Syntax**

```
crypto isakmp key [8] <key> hostname <hostname> [type {eap|psk}]
```

```
no crypto isakmp key [8] <key> hostname <hostname> [type
{eap|psk}]
```

```
crypto isakmp key [8] <key> address {<ipv4-addr>|<ipv6-addr>}
[type {eap|psk}]
```

```
no crypto isakmp key [8] <key> address
{<ipv4-addr>|<ipv6-addr>} [type {eap|psk}]
```

```
crypto isakmp key [8] <key> policy <policy-name> [type
{eap|psk}]
```

```
no crypto isakmp key [8] <key> policy <policy-name> [type
{eap|psk}]
```

| Parameter | Description |
|---|---|
| `crypto` | Security specific command. |
| `isakmp` | Internet Security Association Key Management Protocol provides a common framework for key management implementations. |
| `key` | Pre-shared key (PSK) or Extensible Authentication Protocol (EAP). |
| `<key>` | Specify the key. Use any combination of alphanumeric characters up to 128 bytes. |
| 8 | Specifies that an encrypted key follows. |
| `<hostname>` | A hostname (e.g. example.com). |
| `<ipv4-addr>` | IPv4 address. The IPv4 address uses the format A.B.C.D. |
| `<ipv6-addr>` | IPv6 address. The IPv6 address uses the format X:X::X:X. |

| Parameter | Description |
|---|---|
| *<policy-name>* | The local policy name. This is the name of the tunnel (e.g. tunnel2). |
| type | ISAKMP key type |
| eap | Extensible Authentication Protocol. This can be used with multipoint VPN when performing RADIUS authentication. See the GRE and Multipoint VPNs Feature Overview and Configuration Guide for more information. |
| psk | Pre-shared Key (default) |

**Default** ISAKMP keys do not exist.

**Mode** Global Configuration

**Usage notes** Use this command to configure an authentication key for use with the ISAKMP protocol.

Before a tunnel can be protected by IPsec, each endpoint of the tunnel must verify that they are communicating with an authorized entity. ISAKMP uses authentication keys in the initial handshake between peers to ensure both endpoints are allowed to communicate.

This command specifies both the value of the key and also an identifier which is used to decide which key to use for a particular ISAKMP message exchange. Because the responding endpoint does not identify itself to the local device until after the key is used, it is important that the key identifier is part of the tunnel configuration on the initiating device.

The tunnel configuration parameter used to select which key to use when negotiating IPsec protection for that tunnel is in priority order:

1) **tunnel remote name**

2) **tunnel destination <ipv4-address>|<ipv6-address>** (if the remote name is not specified)

3) **tunnel local name**

4) **tunnel source <ipv4-address>|<ipv6-address>** (if the remote name is not specified)

For point-to-point tunnels, we recommend you configure local and remote names on the tunnels. Then use the remote name of the other device to identify the authentication keys on the local device.

For point-to-multipoint tunnels, it may be necessary to identify the authentication key by the local name of the tunnel, if the ISAKMP negotiation is to be initiated by that tunnel. This is because it is not possible to configure multiple remote names. However, it is possible to use the expected remote addresses or names of the remote initiating tunnels to identify keys. This is because the remote tunnel will identify itself when it initiates a connection.

**Examples**

To configure a pre-shared authentication key of "friend", using a hostname, use the commands below:

```
awplus# configure terminal
awplus(config)# crypto isakmp key friend hostname
mypeer@my.domain.com
```

To remove that pre-shared key, use the commands below:

```
awplus# configure terminal
awplus(config)# no crypto isakmp key friend hostname
mypeer@my.domain.com
```

To configure a pre-shared already-encrypted authentication key, using an IPv4 address, use the commands below:

```
awplus# configure terminal
awplus(config)# crypto isakmp key 8 Nhe6ioQmzbysQaJr6Du+cA==
address 192.168.1.2
```

To configure a pre-shared key, using the local policy "tunnel2", use the commands:

```
awplus# configure terminal
awplus(config)# crypto isakmp key friend policy tunnel2
```

To remove that key, use the commands:

```
awplus# configure terminal
awplus(config)# no crypto isakmp key friend policy tunnel2
```

To configure an ISAKMP key using EAP, enter the commands:

```
awplus# configure terminal
awplus(config)# crypto isakmp key friend hostname example.com
type eap
```

**Related commands**

show isakmp key (IPsec)

tunnel destination (IPsec)

tunnel local name (IPsec)

tunnel remote name (IPsec)

**Command changes**

Version 5.4.9-0.1: **type** parameter added

Version 5.4.9-1.1: **policy** parameter added

# crypto isakmp peer

**Overview** Use this command to configure a peer to use a specific ISAKMP profile.

Use the **no** variant to set the peer back to using the default profile.

**Syntax**

```
crypto isakmp peer address {<ipv4-addr>|<ipv6-addr>} profile
<profile-name>
no crypto isakmp peer address {<ipv4-addr>|<ipv6-addr>} profile
crypto isakmp peer dynamic profile <profile-name>
no crypto isakmp peer dynamic profile
crypto isakmp peer hostname <hostname> profile <profile-name>
no crypto isakmp peer hostname <hostname> profile
crypto isakmp peer policy <policy-name> profile <profile-name>
no crypto isakmp peer policy <policy-name> profile
```

| Parameter | Description |
|---|---|
| *<ipv4-addr>* | IPv4 address. The IPv4 address uses the format A.B.C.D. |
| *<ipv6-addr>* | IPv6 address. The IPv6 address uses the format X:X::X:X. |
| dynamic | Remote endpoint with a dynamic IP address. |
| *<hostname>* | Remote endpoint with a host name as the destination. |
| *<policy-name>* | The name of a local policy. This is the name of the tunnel (e.g. tunnel2). |
| *<profile-name>* | Profile name. |

**Default** By default, all peers use the default profile.

**Mode** Global Configuration

**Usage notes** Use this command to configure a peer to use a specific ISAKMP profile.

When IPsec protection is applied to a tunnel, an ISAKMP profile is selected for use when IPsec parameters need to be negotiated. This profile is chosen when the tunnel first becomes active, and so must be selected based on local configuration only.

The tunnel configuration parameter used to select which ISAKMP profile to use when negotiating IPsec protection for that tunnel is in the following priority order:

1) **tunnel destination dynamic** (if a dynamic profile has been configured)

2) **tunnel endpoint dynamic** (if a dynamic profile has been configured)

3) **tunnel remote name**

4) **tunnel destination <ipv4-address>|<ipv6-address>** (if the remote name is not specified)

5) **tunnel endpoint <ipv4-address>**

6) **tunnel local name**

7) **tunnel source <ipv4-address>|<ipv6-address>** (if the remote name is not specified)

8) **tunnel destination <hostname>** (if the hostname is not specified)

9) **tunnel endpoint <hostname>** (if the hostname is not specified)

## Examples

To configure a profile for a peer, using a dynamic IP address, use the following commands:

```
awplus# configure terminal
awplus(config)# crypto isakmp peer dynamic profile peer_profile
```

To set the profile for the peer back to the default, use the following commands:

```
awplus# configure terminal
awplus(config)# no crypto isakmp peer dynamic profile
```

To configure a profile for a peer, using a local policy name of “tunnel2”, use the commands:

```
awplus# configure terminal
awplus(config)# crypto isakmp peer policy tunnel2 profile
peer-profile
```

To set the profile for the peer back to the default, use the commands:

```
awplus# configure terminal
awplus(config)# no crypto isakmp peer policy tunnel2 profile
```

## Related commands

show isakmp peer

tunnel destination (IPsec)

tunnel endpoint

tunnel local name (IPsec)

tunnel source (IPsec)

tunnel remote name (IPsec)

## Command Changes

Version 5.4.7-0.1: **hostname** parameter added.

Version 5.4.9-1.1: **policy** parameter added.

# crypto isakmp profile

**Overview** Use this command to configure a custom ISAKMP profile.

An ISAKMP profile comprises one or more transforms that can be configured by using the transform (ISAKMP Profile) command.

Use the **no** variant to delete a previously created profile.

**Syntax**

```
crypto isakmp profile <profile_name>
no crypto isakmp profile <profile_name>
```

| Parameter | Description |
|---|---|
| *<profile_name>* | Profile name. Profile names are case insensitive and can be up to 64 characters long composed of printable ASCII characters. Profile names can have only letters from a to z and A to Z, numbers from 0 to 9, - (dash), or _ (underscore). |

**Default** Which ISAKMP profile transform will actually be used depends on how the negotiation between the peers is carried out when establishing the connection. For more information about default ISAKMP profiles, see the following table. Note that you cannot delete or edit the default profile. Expiry time of 24 hours applies to the default profile.

Table 74-2: ISAKMP default profile

| Attribute | Encryption | Integrity | Group | Authentication |
|---|---|---|---|---|
| Transform 1 | AES256 | SHA256 | 14 | Pre-shared |
| Transform 2 | AES256 | SHA256 | 16 | Pre-shared |
| Transform 3 | AES256 | SHA1 | 14 | Pre-shared |
| Transform 4 | AES256 | SHA1 | 16 | Pre-shared |
| Transform 5 | AES128 | SHA256 | 14 | Pre-shared |
| Transform 6 | AES128 | SHA256 | 16 | Pre-shared |
| Transform 7 | AES128 | SHA1 | 14 | Pre-shared |
| Transform 8 | AES128 | SHA1 | 16 | Pre-shared |
| Transform 9 | 3DES | SHA256 | 14 | Pre-shared |
| Transform 10 | 3DES | SHA256 | 16 | Pre-shared |
| Transform 11 | 3DES | SHA1 | 14 | Pre-shared |
| Transform 12 | 3DES | SHA1 | 16 | Pre-shared |

**Mode** Global Configuration

**Examples**

To configure a custom ISAKMP profile for establishing ISAKMP SAs with a remote peer, use the following commands:

```
awplus# configure terminal
awplus(config)# crypto isakmp profile my_profile
awplus(config-isakmp-profile)# transform 2 integrity sha1
encryption 3des group 5
```

To delete a custom profile, use the following commands:

```
awplus# configure terminal
awplus(config)# no crypto isakmp profile my_profile
```

**Related commands**

dpd-interval

dpd-timeout

lifetime (ISAKMP Profile)

transform (ISAKMP Profile)

version (ISAKMP)

**Validation Commands**

show isakmp profile

# debug isakmp

**Overview** Use this command to enable debugging ISAKMP.

To disable debugging ISAKMP, see no debug isakmp or undebug isakmp.

**Syntax** `debug [crypto] isakmp [info|trace|all]`

| Parameter | Description |
|---|---|
| `debug` | Debugging function. |
| `crypto` | Security specific command. |
| `isakmp` | Internet Security Association Key Management Protocol provides a common framework for key management implementations. |
| `info` | Informational debug messages such as protocol events. |
| `trace` | Verbose debug messages including protocol events and message traces. |
| `all` | All debug enabled. |

**Mode** Privileged Exec

**Examples** Figure 74-1: Example output from the **debug isakmp** command on the console.

```
awplus#debug isakmp info
awplus#terminal monitor
% Warning: Console logging enabled
awplus#show ipsec peer
21:03:42 awplus IMISH[30349]: show ipsec peer


10.2.0.10
  IPSEC
    Selector: 0.0.0.0/0 0.0.0.0/0   tunnel1
    Profile: default
  ISAKMP
    LocalID: 10.1.0.10
    RemoteID: 10.2.0.10
awplus#ping 192.168.1.2

PING 192.168.1.2 (192.168.1.2) 56(84) bytes of data.
21:04:13 awplus iked: [DEBUG]: ike_pfkey.c:622:sadb_acquire_callback():
sadb_acquire_callback: seq=6 reqid=409
6 satype=96 sa_src=10.1.0.10[0] sa_dst=10.2.0.10[0] samode=229 selid=1
21:04:13 awplus iked: [DEBUG]: isakmp.c:918:isakmp_initiate(): new request (seq:6
spid:1 reqid:4096)
21:04:13 awplus iked: [DEBUG]: ikev2.c:758:ikev2_initiate(): creating new ike_sa
21:04:13 awplus iked: [DEBUG]: ike_sa.c:431:ikev2_allocate_sa():
ikev2_create_sa((nil), 10.1.0.10[500], 10.2.0
.10[500], 0x810b678)
21:04:13 awplus iked: [DEBUG]: ike_sa.c:434:ikev2_allocate_sa(): sa: 0x810d3a0
21:04:13 awplus iked: [DEBUG]: ikev2.c:800:ikev2_initiate(): child_sa: 0x810dd60
21:04:13 awplus iked: [DEBUG]: ikev2_child.c:139:ikev2_child_state_set(): child_sa
0x810dd60 state IDLING -> G
ETSPI
21:04:13 awplus iked: [DEBUG]: ike_pfkey.c:269:sadb_getspi(): sadb_getspi: seq=6,
satype=96
21:04:13 awplus iked: [DEBUG]: ike_pfkey.c:622:sadb_acquire_callback():
sadb_acquire_callback: seq=7 reqid=409
6 satype=96 sa_src=10.1.0.10[0] sa_dst=10.2.0.10[0] samode=229 selid=1
21:04:13 awplus iked: [DEBUG]: isakmp.c:918:isakmp_initiate(): new request (seq:7
spid:1 reqid:4096)
21:04:13 awplus iked: [DEBUG]: ikev2.c:800:ikev2_initiate(): child_sa: 0x810ec68
21:04:13 awplus iked: [DEBUG]: ikev2_child.c:139:ikev2_child_state_set(): child_sa
0x810ec68 state IDLING -> G
ETSPI

awplus#no debug isakmp
awplus#show debugging isakmp

ISAKMP Debugging status:
  ISAKMP Informational debugging is disabled
  ISAKMP Trace debugging is disabled
```

**Related commands** no debug isakmp

undebug isakmp

# dpd-interval

**Overview** Use this command to specify the Dead Peer Detection (DPD) interval for an ISAKMP profile.

DPD is an IKE mechanism using a form of keep-alive to determine if a tunnel peer is still active.

The interval parameter specifies the amount of time the device waits for traffic from its peer before sending a DPD acknowledgment message.

Use the **no** variant to set the interval to its default (30 seconds).

**Syntax**

```
dpd-interval <10-86400>
no dpd-interval
```

| Parameter | Description |
|---|---|
| *<10-86400>* | Interval expressed in seconds. |

**Default** If you do not specify an interval, the default interval of 30 seconds applies.

**Mode** ISAKMP Profile Configuration

**Examples** To specify a DPD interval, use the following commands:

```
awplus(config)# crypto isakmp profile my_profile
awplus(config-isakmp-profile)# dpd-interval 20
```

To set the interval to its default, use the following commands:

```
awplus(config-isakmp-profile)# no dpd-interval
```

**Related commands** crypto isakmp profile

**Validation Commands** show isakmp profile

# dpd-timeout

**Overview** Use this command to specify a Dead Peer Detection (DPD) timeout for IKEv1.

DPD is an IKE mechanism using a form of keep-alive to determine if a tunnel peer is still active.

DPD timeout defines the timeout interval after which all connections to a peer are deleted in case of inactivity. This only applies to IKEv1, in IKEv2 the default retransmission timeout applies as every exchange is used to detect dead peers.

Use the **no** variant to set the timeout to its default (150 seconds).

**Syntax**

```
dpd-timeout <10-86400>
no dpd-timeout
```

| Parameter | Description |
|---|---|
| *<10-86400>* | Timeout in seconds. |

**Default** If you do not specify a timeout, the default timeout of 150 seconds applies.

**Mode** ISAKMP Profile Configuration

**Examples** To specify a DPD timeout for IKEv1, use the following commands:

```
awplus(config)# crypto isakmp profile my_profile
awplus(config-isakmp-profile)# dpd-timeout 200
```

To set the timeout to its default, use the following command:

```
awplus(config-isakmp-profile)# no dpd-timeout
```

**Related commands** crypto isakmp profile

**Related commands** show isakmp profile

# interface tunnel (IPsec)

**Overview**

Use this command to create a tunnel interface or to enter Interface mode to configure an existing tunnel. Tunnel interfaces are identified by an index identifier that is an integer in the range from 0 through 65535.

Use the **no** variant of this command to remove a previously created tunnel interface.

**Syntax**

```
interface tunnel<0-65535>
no interface tunnel<tunnel-index>
```

| Parameter | Description |
|---|---|
| *<0-65535>* | Specify a tunnel interface index identifier in the range from 0 to 65535. |

**Default**

Tunnel interfaces do not exist.

**Mode**

Global Configuration

**Usage notes**

After you have created the tunnel interface, use the **tunnel mode** command to enable the tunnel.

Note that you need to designate a tunnel mode, tunnel source address, tunnel destination address, IP address of tunnel interface and use tunnel protection ipsec (IPsec) command to encrypt and authenticate the packets travelling though the tunnel.

**Examples**

To configure an IPsec tunnel interface with index 100, enter the commands below:

```
awplus# configure terminal
awplus(config)# interface tunnel100
awplus(config-if)# tunnel mode ipsec ipv4
```

To remove the IPsec tunnel interface tunnel100, enter the commands below:

```
awplus# configure terminal
awplus(config)# no interface tunnel100
```

**Command changes**

Version 5.4.7-2.1: increased range for **tunnel** index identifier.

# lifetime (IPsec Profile)

**Overview**

Use this command to specify a lifetime for an IPsec SA.

Lifetime measures how long the IPsec SA can be maintained before it expires. Lifetime prevents a connection from being used too long.

Use the **no** variant to set the lifetime to default (28800 seconds).

**Syntax**

```
lifetime seconds <300-31449600>
no lifetime seconds
```

| Parameter | Description |
|---|---|
| *<300-31449600>* | Lifetime in seconds. |

**Default**

If you do not specify a lifetime, the default lifetime of 28800 seconds (8 hours) applies.

**Mode**

IPsec Profile Configuration

**Examples**

To specify a lifetime for an IPsec SA, use the following commands:

```
awplus(config)# crypto ipsec profile my_profile
awplus(config-ipsec-profile)# lifetime seconds 400
```

To set the lifetime to its default, use the following commands:

```
awplus(config)# crypto ipsec profile my_profile
awplus(config-ipsec-profile)# no lifetime seconds
```

**Related commands**

crypto ipsec profile

# lifetime (ISAKMP Profile)

**Overview** Use this command to specify a lifetime for an ISAKMP SA.

Lifetime measures how long the ISAKMP SA can be maintained before it expires. Lifetime prevents a connection from being used too long.

Use the **no** variant to set the lifetime to default (86400 seconds).

**Syntax**

```
lifetime <600-31449600>
no lifetime
```

| Parameter | Description |
|---|---|
| *<600-31449600>* | Lifetime in seconds. |

**Default** If you do not specify a lifetime, the default lifetime of 86400 seconds (8 hours) applies.

**Mode** ISAKMP Profile Configuration

**Examples** To specify a lifetime for an ISAKMP SA, use the following commands:

```
awplus(config)# configure isakmp profile my_profile
awplus(config-isakmp-profile)# lifetime 700
```

To set the lifetime to its default, use the following commands:

```
awplus(config-isakmp-profile)# no lifetime
```

**Related commands** crypto isakmp profile

# no debug isakmp

**Overview** Use this command to disable debugging ISAKMP.

To enable debugging ISAKMP, see debug isakmp.

**Syntax** `no [crypto] isakmp [info|trace|all]`

| Parameter | Description |
|---|---|
| `no` | Disable debugging function. |
| `crypto` | Security specific. |
| `isakmp` | Internet Security Association Key Management Protocol provides a common framework for key management implementations. |
| `info` | Informational debug messages such as protocol events. |
| `trace` | Verbose debug messages including protocol events and message traces. |
| `all` | All debug enabled. |

**Mode** Privileged Exec

**Related commands** debug isakmp

undebug isakmp

# pfs

**Overview** Use this command to enable PFS and set a Diffie-Hellman group for PFS in an IPsec profile.

Use the **no** variant to disable PFS.

**Syntax**

```
pfs {2|5|14|15|16|18}
no pfs
```

| Parameter | Description |
|---|---|
| 2 | 1024-bit MODP Group |
| 5 | 1536-bit MODP Group |
| 14 | 2048-bit MODP Group |
| 15 | 3072-bit MODP Group |
| 16 | 4096-bit MODP Group |
| 18 | 8192-bit MODP Group |

**Default** PFS is disabled.

**Mode** IPsec Profile Configuration

**Usage notes** Perfect Forward Secrecy (PFS) ensures generated keys, for example IPsec SA keys are not compromised if any other keys, for example, ISAKMP SA keys are compromised.

The specified PFS group must match the PFS group setting on the peer - especially when IKEv2 is used for ISAKMP SA negotiation. With IKEv2, if there is a PFS group mismatch an IPsec SA will be established and the tunnel will come up because PFS is not required for the initial child SA negotiation. However, when the IPsec SA rekeys it will fail due to the PFS group mismatch, and upon IPsec SA expiry the tunnel will no longer be able to carry traffic.

**Examples** To enable PFS and set a Diffie-Hellman group for PFS, use the following commands:

```
awplus(config)# crypto ipsec profile my_profile
awplus(config-ipsec-profile)# pfs 15
```

To disable PFS, use the following command:

```
awplus(config-ipsec-profile)# no pfs
```

**Related commands** crypto ipsec profile

**Validation Commands** show ipsec profile

# rekey

**Overview** Use this command to set the rekey policy for an IPsec profile. This policy will be used to make a decision or whether the SA will rekey at its expiry.

The options are **always**, **never**, and **on-demand**. The **on-demand** option makes its decision based on whether the link has seen any traffic since the SA's last rekey.

Use the **no** variant of this command to set the rekey policy back to its default of **always**.

**Syntax**

```
rekey {always|never|on-demand}
no rekey
```

| Parameter | Description |
|---|---|
| always | Always rekey this SA (default) |
| never | Never rekey this SA |
| on-demand | Only rekey this SA if it has been used since the last rekey |

**Default** By default, an IPsec SA will always rekey.

**Mode** IPsec Profile Configuration

**Usage notes** These options may be useful if you have a hub and spoke VPN topology and need to provision more than the maximum number of concurrent active VPNs supported by your device. **Never** and **on-demand** allow unused VPNs to be aged out, making more efficient use of the number of available VPNs.

**Example** To only rekey when traffic is detected over the interface, for the profile named 'myprofile', use the commands:

```
awplus# configure terminal
awplus(config)# crypto ipsec profile myprofile
awplus(config-ipsec-profile)# rekey on-demand
```

To reset the rekey policy back to its default, use the commands:

```
awplus# configure terminal
awplus(config)# crypto ipsec profile myprofile
awplus(config-ipsec-profile)# no rekey
```

**Related commands** crypto ipsec profile

show ipsec profile

**Command changes** Version 5.4.9-2.1: command added

# show debugging isakmp

**Overview** Use this command to show if debugging ISAKMP is enabled.

**Syntax**

```
show debugging [crypto] isakmp
```

| Parameter | Description |
|---|---|
| `debugging` | Debugging information. |
| `crypto` | Security specific command. |
| `isakmp` | Internet Security Association Key Management Protocol provides a common framework for key management implementations. |

**Mode** Privileged Exec

**Examples** To show if debugging ISAKMP is enabled, enter the command below:

```
awplus# show debugging isakmp
```

**Output** Figure 74-2: Example output from the **show debugging isakmp** command

```
awplus#show debugging isakmp
ISAKMP Debugging status:
  ISAKMP Informational debugging is enabled
  ISAKMP Trace debugging is disabled
```

# show interface tunnel (IPsec)

**Overview** Use this command to display status information of tunnels.

The tunnel remains inactive if no valid tunnel source or tunnel destination is configured.

**Syntax** `show interface tunnel<tunnel-index>`

| Parameter | Description |
|---|---|
| `tunnel` | Specify this parameter to display tunnel status information of a given tunnel identified by the <*tunnel-index*> parameter. |
| <*tunnel-index*> | Specify a tunnel index in the range from 0 through 65535. |

**Mode** Privileged Exec

**Examples** To display status information for IPsec tunnel "tunnel2", use the command:

```
awplus# show interface tunnel2
```

**Output** Figure 74-3: Example output from the **show interface tunnel** command

```
awplus#show interface tunnel2
Interface tunnel2
  Link is UP, administrative state is UP
  Hardware is Tunnel
  IPv4 address 192.168.1.1/24 point-to-point 192.168.1.255
  index 21 metric 1 mtu 1438
  <UP,POINT-TO-POINT,RUNNING,MULTICAST>
  SNMP link-status traps: Disabled
  Tunnel source 10.1.0.10, destination 10.2.0.10
  Tunnel name local 10.1.0.10, remote 10.2.0.10
  Tunnel traffic selectors (ID, local, remote)
    1    192.168.2.0/24             192.168.3.0/24
    2    0.0.0.0/0                  192.168.10.0/24
  Tunnel protocol/transport ipsec ipv4, key disabled, sequencing disabled
  Checksumming of packets disabled, path MTU discovery disabled
  Tunnel protection via IPsec (profile "default")
    input packets 11, bytes 924, dropped 0, multicast packets 0
    output packets 0, bytes 0, multicast packets 0 broadcast packets 0
  Time since last state change: 0 days 03:23:10
```

**Related commands** interface tunnel (IPsec)

# show ipsec counters

**Overview** Use this command to show IPSec counters.

**Syntax** `show [crypto] ipsec counters`

| Parameter | Description |
|---|---|
| `crypto` | Security specific command. |
| `ipsec` | Internet Protocol Security defines the protection of IP packets using encryption and authentication. |
| `counters` | Show IPSec transformation statistic. |

**Mode** Privileged Exec

**Examples** To show IPSec counters, enter the command below:

```
awplus# show ipsec counters
```

**Output** Figure 74-4: Example output from the **show ipsec counters** command

```
awplus#show ipsec counters
Name                        Value
-------------------------------------
InError                     0
InBufferError               0
InHdrError                  0
InNoStates                  0
InStateProtoError           0
InStateModeError            0
InStateSeqError             0
InStateExpired              0
InStateMismatch             0
InStateInvalid              0
InTmplMismatch              0
InNoPols                    0
InPolBlock                  0
InPolError                  0
OutError                    0
OutBundleGenError           0
OutBundleCheckError         0
OutNoStates                 0
OutStateProtoError          0
OutStateModeError           0
OutStateSeqError            0
OutStateExpired             0
OutPolBlock                 0
OutPolDead                  0
OutPolError                 0
FwdHdrError                 0
```

# show ipsec peer

**Overview** Use this command to show IPSec information on a per peer basis.

**Syntax** `show [crypto] ipsec peer [<hostname>|<ipv4-addr>|<ipv6-addr>]`

| Parameter | Description |
|---|---|
| `crypto` | Security specific command. |
| `peer` | Remote endpoint. |
| `<hostname>` | Destination hostname. |
| `<ipv4-addr>` | Destination IPv4 address. The IPv4 address uses the format A.B.C.D. |
| `<ipv6-addr>` | Destination IPv6 address. The IPv6 address uses the format X:X::X:X. |

**Mode** Privileged Exec

**Examples** To show IPSec information on a per peer basis, enter the command below:

```
awplus# show ipsec peer 172.16.0.1
```

**Output** Figure 74-5: Example output from the **show ipsec peer** command

```
awplus#show ipsec peer 172.16.0.1
172.16.0.2
  IPsec
    Selectors (local:remote)
      Address:  0.0.0.0/0 : 0.0.0.0/0
      Protocol: any:any
      Port:     any:any
      Mark:     1:1
    Profile: default
    SAs:
      SPI (In:Out): ca865389:c9c7e3d3
        Selectors:  192.168.1.0/24 : 192.168.2.0/24
        Proto:      ESP
        Mode:       tunnel
        Encryption: AES256
        Integrity:  SHA256
        Expires:    28796s
  ISAKMP
    LocalID:  172.16.0.1
    RemoteID: 172.16.0.2
    SAs:
      Cookies (Initiator:Responder) 03071749781e5992:93f8457816d3d40d
        Ver:            2             Lifetime: 84569s    State: Established
        Authentication: PSK           Group:    14
        Encryption:     AES256        NATT:     no
        Integrity:      SHA256        DPD:      yes
```

# show ipsec policy

**Overview** Use this command to show IPSec policies.

**Syntax** `show [crypto] ipsec policy`

| Parameter | Description |
|---|---|
| `crypto` | Security specific command. |
| `ipsec` | Internet Protocol Security defines the protection of IP packets using encryption and authentication. |
| `policy` | Policy. |

**Mode** Privileged Exec

**Examples** To show IPSec policies, enter the command below:

```
awplus# show ipsec policy
```

**Output** Figure 74-6: Example output from the **show ipsec policy** command

```
awplus#show ipsec policy
Traffic Selector (addresses protocol ports interface)
  Profile           Peer
0.0.0.0/0 0.0.0.0/0   tunnel1
  default           10.2.0.10
```

# show ipsec profile

**Overview** Use this command to show IPsec default and custom profiles.

An IPsec profile consists of a set of parameters that are used by IPsec when establishing IPsec SAs with a remote peer. AlliedWare Plus provides default ISAKMP and IPsec profiles that contain a priority ordered set of transforms that are considered secure by the security community.

**Syntax** `show [crypto] ipsec profile [<profile_name>]`

| Parameter | Description |
|---|---|
| `crypto` | Security specific. |
| `ipsec` | Internet Protocol Security defines the protection of IP packets using encryption and authentication. |
| `profile` | An IPsec profile consists of a set of parameters that are used by IPsec SAs with a remote peer. |
| `<profile_name>` | Custom profile name. |

**Mode** Privileged Exec

**Examples** To show all IPsec profiles, including the default profile, use the following command:

```
awplus# show ipsec profile
```

**Output** Figure 74-7: Example output from the **show ipsec profile** command

```
awplus#show ipsec profile
IPsec Profile: default
  Replay-window: 32
  Rekey: Always
  Expiry: 8h
  PFS group: disabled
  Transforms:
  Protocol Integrity Encryption
    1 ESP SHA256 AES256
    2 ESP SHA1 AES256
    3 ESP SHA256 AES128
    4 ESP SHA1 AES128
    5 ESP SHA256 3DES
    6 ESP SHA1 3DES

IPsec Profile: my_profile
 Replay-window: 32
 Rekey: On Demand
 Expiry: 8h
 PFS group: disabled
 Transforms:
 Protocol Integrity Encryption
  2 ESP SHA1 3DES
```

**Examples** To show IPsec profile “my_profile”, use the command:

```
awplus# show ipsec profile my_profile
```

**Output** Figure 74-8: Example output from the **show ipsec profile** command

```
awplus#show ipsec profile my_profile
IPsec Profile: my_profile
  Replay-window: 32
  Rekey: On Demand
  Expiry: 8h
  PFS group: disabled
  Transforms:
  Protocol Integrity Encryption
   2 ESP SHA1 3DES
```

**Related commands** crypto ipsec profile

# show ipsec sa

**Overview** Use this command to view the settings used by current security associations. SAs specify the Security Parameter Index (SPI), protocols, algorithms and keys for protecting a single flow of traffic between two IPSec peers. For more information about SA, see the Internet Protocol Security (IPSec) Feature Overview and Configuration Guide.

**Syntax**

```
show [crypto] ipsec sa
```

| Parameter | Description |
|---|---|
| crypto | Security specific command. |
| ipsec | Internet Protocol Security defines the protection of IP packets using encryption and authentication. |
| sa | Security Association. |

**Mode** Privileged Exec

**Examples** To view the settings used by current security associations, enter the command below:

```
awplus# show ipsec sa
```

**Output** Figure 74-9: Example output from the **show ipsec sa** command

```
awplus#show ipsec sa
-------------------------------------------------------------------------------
Peer                  SPI (in:out)          Mode          Proto  Expires
                      Encryption            Integrity     PFS
-------------------------------------------------------------------------------
10.0.0.20             c2d8c150:7b24d3f5     tunnel        ESP    28786s
                      AES256                SHA256        -
10.0.0.22             c6c2ad0d:0d008e3d     tunnel        ESP    3582s
                      3DES                  SHA1          -
10.0.0.25             cb36f9dd:cd87a834     tunnel        ESP    28778s
                      AES128                SHA1          2
```

# show isakmp counters

**Overview** Use this command to show ISAKMP counters.

**Syntax** `show [crypto] isakmp counters`

| Parameter | Description |
|---|---|
| `crypto` | Security specific command. |
| `isakmp` | Internet Security Association Key Management Protocol provides a common framework for key management implementations. |
| `counters` | Show ISAKMP counters. |

**Mode** Privileged Exec

**Examples** To show ISAKMP counters, enter the command below:

```
awplus# show isakmp counters
```

**Output** Figure 74-10: Example output from the **show isakmp counters** command

```
awplus#show isakmp counters
Name                        Value
-------------------------------------
ikeInitRekey                0
ikeRspRekey                 0
ikeChildSaRekey             0
ikeInInvalid                0
ikeInInvalidSpi             0
ikeInInitReq                0
ikeInInitRsp                0
ikeOutInitReq               0
ikeOutInitRsp               0
ikeInAuthReq                0
ikeInAuthRsp                0
ikeOutAuthReq               0
ikeOutAuthRsp               0
ikeInCrChildReq             0
ikeInCrChildRsp             0
ikeOutCrChildReq            0
ikeOutCrChildRsp            0
ikeInInfoReq                0
ikeInInfoRsp                0
ikeOutInfoReq               0
ikeOutInfoRsp               0
```

# show isakmp key (IPsec)

**Overview** Use this command to show ISAKMP authentication keys. These keys can be of type Pre-shared Key (PSK) or Extensible Authentication Protocol (EAP). Keys are stored encrypted in the running-configuration.

**Syntax**

```
show [crypto] isakmp key
```

| Parameter | Description |
|---|---|
| crypto | Security specific command. |
| isakmp | Internet Security Association Key Management Protocol provides a common framework for key management implementations. |
| key | Pre-shared key (PSK), or Extensible Authentication Protocol (EAP). |

**Mode** Privileged Exec

**Examples** To show the ISAKMP keys, enter the command below:

```
awplus# show isakmp key
```

**Output** Figure 74-11: Example output from the **show isakmp key** command

```
awplus#show isakmp key
Hostname/IP address          PSK                EAP
-------------------------------------------------------------------
10.1.1.1                   mykeyone           mykeytwo
10.1.5.1                   mykeyfive          -
10.1.7.1                   -                  mykeyseven
```

**Related commands** crypto isakmp key

# show isakmp peer

**Overview** Use this command to show ISAKMP profile and key status for ISAKMP peers.

**Syntax** `show isakmp peer [<hostname>|<ipv4-addr>|<ipv6-addr>]`

| Parameter | Description |
|---|---|
| *<hostname>* | Destination hostname. |
| *<ipv4-addr>* | Destination IPv4 address. The IPv4 address uses the format A.B.C.D. |
| *<ipv6-addr>* | Destination IPv6 address. The IPv6 address uses the format X:X::X:X. |

**Mode** Privileged Exec

**Examples** To show ISAKMP profile and key status for ISAKMP peers, use the following command:

```
awplus# show isakmp peer
```

**Output** Figure 74-12: Example output from the **show isakmp peer** command

```
awplus#show isakmp peer
Peer                    Profile (* incomplete)          Key
-----------------------------------------------------------------
10.1.1.1                default                         PSK, EAP
10.1.5.1                SECURE                          PSK
example.com             LEGACY                          EAP
```

**Related commands** crypto isakmp peer

**Command changes** Version 5.4.7-0.1: Parameter **hostname** added for DDNS feature.

# show isakmp profile

**Overview** Use this command to show ISAKMP default and custom profiles.

**Syntax** `show [crypto] isakmp profile [<profile_name>]`

| Parameter | Description |
|---|---|
| *<profile_name>* | Custom profile name. |

**Mode** Privileged Exec

**Examples** To show ISAKMP profiles, including the default profile, use the command:

```
awplus# show isakmp profile
```

**Output** Figure 74-13: Example output from the **show isakmp profile** command

```
awplus#show isakmp profile
ISAKMP Profile: default
  Version:        IKEv2
  Authentication: PSK
  Expiry:         24h
  DPD Interval:   30s
  Transforms:
       Integrity   Encryption  DH Group
    1    SHA256      AES256      14
    2    SHA256      AES256      16
    3    SHA1        AES256      14
    4    SHA1        AES256      16
    5    SHA256      AES128      14
    6    SHA256      AES128      16
    7    SHA1        AES128      14
    8    SHA1        AES128      16
    9    SHA256      3DES        14
   10    SHA256      3DES        16
   11    SHA1        3DES        14
   12    SHA1        3DES        16

ISAKMP Profile: my_profile
  Version:        IKEv2
  Authentication: PSK
  Expiry:         24h
  DPD Interval:   30s
  Transforms:
       Integrity   Encryption  DH Group
    2    SHA1        3DES         5
```

**Examples** To show ISAKMP profile “my_profile”, use the command:

```
awplus# show isakmp profile my_profile
```

**Output** Figure 74-14: Example output from the **show isakmp profile** command

```
awplus#show isakmp profile my_profile
ISAKMP Profile: my_profile
  Version:        IKEv2
  Authentication: PSK
  Expiry:         24h
  DPD Interval:   30s
  Transforms:
       Integrity   Encryption  DH Group
    2    SHA1        3DES         5
```

**Related commands** crypto isakmp profile

# show isakmp sa

**Overview** Use this command to show current IKE security associations at a peer.

**Syntax** `show [crypto] isakmp sa`

| Parameter | Description |
|---|---|
| `crypto` | Security specific command. |
| `isakmp` | Internet Security Association Key Management Protocol provides a common framework for key management implementations. |
| `sa` | Security Association. |

**Mode** Privileged Exec

**Examples** To show current IKE security associations at a peer, enter the command below:

```
awplus# show isakmp sa
```

**Output** Figure 74-15: Example output from the **show isakmp sa** command

```
awplus#show isakmp sa
-------------------------------------------------------------------------------
Peer                 Cookies (initiator:responder)       Auth  Ver   Expires
                     Encryption    Integrity    Group    DPD   NATT  State
-------------------------------------------------------------------------------
10.0.0.20            f93c2717a1ece407:972bc0c77344d7a4   PSK   1     78340s
                     AES256        SHA256       2        yes   no    Established
10.0.0.22            ccb7f90b54945375:2642525bd20f3428   PSK   1     3334s
                     3DES          SHA1         2        yes   no    Established
10.0.0.25            bd0efef134c86656:d46d0b1b72b46444   PSK   1     819s
                     AES128        SHA1         2        yes   no    Established
```

# transform (IPsec Profile)

**Overview** Use this command to create an IPsec profile transform, which specifies the encryption and authentication algorithms used to protect data.

Use the **no** variant to delete a previously created transform.

**Syntax**

```
transform <1-255> protocol esp integrity {sha1|sha256|sha512}
encryption {3des|aes128|aes192|aes256|null}
```

```
no transform <1-255>
```

| Parameter | Description |
|---|---|
| *<1-255>* | Transform priority (1 is the highest) |
| `sha1` | Secure Hash Standard with 160-bit digest size |
| `sha256` | Secure Hash Standard with 256-bit digest size |
| `sha512` | Secure Hash Standard with 512 bit digest size |
| `3des` | Triple DES symmetric key block cipher with a 168-bit key |
| `aes128` | Advanced Encryption Standard symmetric key block cipher with a 128-bit key |
| `aes192` | Advanced Encryption Standard symmetric key block cipher with a 192-bit key |
| `aes256` | Advanced Encryption Standard symmetric key block cipher with a 256-bit key |
| `null` | No encryption. This option is not intended for use in a live network. It should only be used for testing purposes. |

**Default** By default, an IPsec profile has no transforms and so will not be active.

**Mode** IPsec Profile Configuration

**Examples** To configure an IPsec profile transform, use the following commands:

```
awplus(config)# crypto ipsec profile my_profile
```

```
awplus(config-ipsec-profile)# transform 2 protocol esp
integrity sha1 encryption 3des
```

To delete a created transform, use the following command:

```
awplus(config-ipsec-profile)# no transform 2
```

**Related commands** crypto ipsec profile

**Validation Commands** show ipsec profile

# transform (ISAKMP Profile)

**Overview** Use this command to create an ISAKMP profile transform which specifies the encryption and authentication algorithms used to protect data in the tunnel.

Use the **no** variant to delete a previously created transform.

**Syntax**

```
transform <1-255> integrity {sha1|sha256|sha512} encryption
{3des|aes128|aes192|aes256} group {2|5|14|15|16|18}
```

```
no transform <1-255>
```

| Parameter | Description |
|---|---|
| *<1-255>* | Transform priority (1 is the highest) |
| sha1 | Secure Hash Standard with 160-bit digest size |
| sha256 | Secure Hash Standard with 256-bit digest size |
| sha512 | Secure Hash Standard with 512 bit digest size |
| 3des | Triple DES symmetric key block cipher with a 168-bit key |
| aes128 | Advanced Encryption Standard symmetric key block cipher with a 128-bit key |
| aes192 | Advanced Encryption Standard symmetric key block cipher with a 192-bit key |
| aes256 | Advanced Encryption Standard symmetric key block cipher with a 256-bit key |
| group | Diffie-Hellman group |
| 2 | 1024-bit MODP Group |
| 5 | 1536-bit MODP Group |
| 14 | 2048-bit MODP Group |
| 15 | 3072-bit MODP Group |
| 16 | 4096-bit MODP Group |
| 18 | 8192-bit MODP Group |

**Default** By default, an ISASMP profile has no transforms and so will not be active.

**Mode** ISAKMP Profile Configuration

**Examples** To create an ISAKMP profile transform, use the following commands:

```
awplus(config)# crypto isakmp profile my_profile
```

```
awplus(config-isakmp-profile)# transform 2 integrity sha1
encryption 3des group 5
```

To delete a created transform, use the following command:

```
awplus(config-isakmp-profile)# no transform 2
```

**Related commands**

crypto isakmp profile

# tunnel destination (IPsec)

**Overview** Use this command to specify a destination IPv4 or IPv6 address or destination network name for the remote end of the tunnel.

Use the **no** variant of this command to remove a configured tunnel destination address.

**Syntax**

```
tunnel destination {<WORD>|<ipv4-address>|<ipv6-address>}
no tunnel destination {<WORD>|<ipv4-address>|<ipv6-address>}
```

| Parameter | Description |
|---|---|
| *<WORD>* | Destination network name or "dynamic". The "dynamic" parameter allows you to specify a dynamic IP address for the remote endpoint. The dynamic IP address can be obtained, for example, via DHCP. |
| *<ipv4-address>* | Destination IPv4 address. The IPv4 address uses the format A.B.C.D. |
| *<ipv6-address>* | Destination IPv6 address. The IPv6 address uses the format X:X::X:X. |

**Mode** Interface Configuration

**Examples** To configure a destination IPv4 address for IPsec tunnel45, use the commands:

```
awplus# configure terminal
awplus(config)# interface tunnel45
awplus(config-if)# tunnel mode ipsec ipv4
awplus(config-if)# tunnel destination 192.0.3.1
```

To configure a destination IPv6 address for IPsec tunnel45, use the commands:

```
awplus# configure terminal
awplus(config)# interface tunnel45
awplus(config-if)# tunnel mode ipsec ipv6
awplus(config-if)# tunnel destination 2001:0db8::
```

To configure a destination network name for IPsec tunnel45, use the commands:

```
awplus# configure terminal
awplus(config)# interface tunnel45
awplus(config-if)# tunnel mode ipsec ipv4
awplus(config-if)# tunnel destination www.example.com
```

To configure a dynamic IP address for the tunnel destination, use the commands:

```
awplus# configure terminal
awplus(config)# interface tunnel45
awplus(config-if)# tunnel mode ipsec ipv4
awplus(config-if)# tunnel destination dynamic
```

To remove the destination address of IPSec tunnel45, use the commands:

```
awplus# configure terminal
awplus(config)# interface tunnel45
awplus(config-if)# no tunnel destination 192.0.3.1
```

**Related commands**

tunnel source (IPsec)

# tunnel local name (IPsec)

**Overview** Use this command to specify an IPSec tunnel hostname to send to the peer for authentication when you apply tunnel protection ipsec (IPsec) to encrypt the packets and configure an ISAKMP key.

Use the **no** variant of this command to remove a previously configured IPSec tunnel hostname.

**Syntax**

```
tunnel local name <local-name>
no tunnel local name
```

| Parameter | Description |
|---|---|
| `<local-name>` | Source tunnel hostname. |

**Default** The default tunnel local name is the IP address of tunnel source.

**Mode** Interface Configuration

**Examples** To configure the tunnel local name office1 for tunnel6, use the commands below:

```
awplus# configure terminal
awplus(config)# interface tunnel6
awplus(config-if)# tunnel local name office1
```

To remove a configured tunnel local name for tunnel6, use the commands below:

```
awplus# configure terminal
awplus(config)# interface tunnel6
awplus(config-if)# no tunnel local name
```

**Related commands** tunnel remote name (IPsec)

# tunnel local selector

**Overview** Use this command to specify a local subnet for a traffic selector pair.

Use the **no** variant of this command to unset the local subnet for the traffic selector pair so that it matches all sources, i.e. 0.0.0.0/0 or ::/0 for IPv4 and IPv6, respectively. When local and remote subnets for a traffic selector pair are both unset, the traffic selector pair is removed.

**Syntax**

```
tunnel local selector [<traffic-selector-ID>]
{<ipv4-subnet>|<ipv6-subnet>}
no tunnel local selector [<traffic-selector-ID>]
```

| Parameter | Description |
|---|---|
| *<traffic-selector-ID>* | Optional traffic selector ID from 1 through 65535. The default is 1. |
| *<ipv4-subnet>* | IPv4 subnet in the format A.B.C.D/M. |
| *<ipv6-subnet>* | IPv6 subnet in the format of X:X::X:X/M |

**Default** When no traffic selector pairs are configured there is an implicit traffic selector pair, where the local and remote subnets are 0.0.0.0/0 or ::/0 depending on the tunnel IPsec mode.

**Mode** Interface configuration

**Usage notes** A traffic selector pair is an agreement between IKE peers to permit traffic through a tunnel if the traffic matches a specified pair of local and remote subnets. When the local selector is specified but the remote selector is not, the selector pair implicitly matches all destinations.

**Examples** To specify an IPv4 destination address as the traffic selector for the traffic to match for tunnel0, use the commands:

```
awplus# configure terminal
awplus(config)# interface tunnel0
awplus(config-if)# tunnel source eth1
awplus(config-if)# tunnel destination 10.0.0.2
awplus(config-if)# tunnel local name office
awplus(config-if)# tunnel mode ipsec ipv4
awplus(config-if)# tunnel local selector 192.168.1.0/24
awplus(config-if)# tunnel remote selector 192.168.2.0/24
```

To configure an additional source and destination traffic selector pair for the traffic to match for tunnel0, use the commands:

```
awplus(config-if)# tunnel local selector 5 192.168.1.0/24
awplus(config-if)# tunnel remote selector 5 192.168.2.0/24
```

To specify an IPv6 source address as the traffic selector for the traffic to match for `tunnel0`, use the commands:

```
awplus# configure terminal
awplus(config)# interface tunnel0
awplus(config-if)# tunnel source eth1
awplus(config-if)# tunnel destination 2001:db8:10::1
awplus(config-if)# tunnel local name office
awplus(config-if)# tunnel mode ipsec ipv6
awplus(config-if)# tunnel local selector 2001:db8:1::/64
awplus(config-if)# tunnel remote selector 2001:db8:2::/64
```

To configure an additional source and destination traffic selector pair for the traffic to match for tunnel0, use the commands:

```
awplus(config-if)# tunnel local selector 5 2001:db8:1::/64
awplus(config-if)# tunnel remote selector 5 2001:db8:2::/64
```

To unset the destination traffic selector for the traffic selector pair with ID 1, for tunnel 6, use the commands:

```
awplus# configure terminal
awplus(config)# interface tunnel6
awplus(config-if)# no tunnel remote selector
```

or

```
awplus(config-if)# no tunnel remote selector 1
```

**Related commands**

tunnel remote selector

tunnel selector paired

show interface tunnel (IPsec)

# tunnel mode ipsec

**Overview** Use this command to configure the encapsulation tunneling mode to use.

Use the **no** variant of this command to remove an established tunnel.

**Syntax**

```
tunnel mode ipsec {ipv4|ipv6}
no tunnel mode
```

| Parameter | Description |
|---|---|
| `ipsec ipv4` | IPv4 IPsec tunnel |
| `ipsec ipv6` | IPv6 IPsec tunnel |

**Default** Virtual tunnel interfaces have no mode set.

**Mode** Interface Configuration

**Usage notes** A tunnel will not become operational until it is configured with this command.

**Examples** To configure IPSec in IPv4 tunnel mode, use the commands:

```
awplus# configure terminal
awplus(config)# interface tunnel6
awplus(config-if)# tunnel mode ipsec ipv4
```

To remove the configured IPSec tunnel mode for tunnel6, use the commands:

```
awplus# configure terminal
awplus(config)# interface tunnel6
awplus(config-if)# no tunnel mode
```

# tunnel protection ipsec (IPsec)

**Overview**

Use this command to enable IPsec protection for packets encapsulated by this tunnel.

Use the **no** variant to disable IPsec protection.

**Syntax**

```
tunnel protection ipsec [profile <profile_name>]
no tunnel protection ipsec
```

**Default**

IPsec protection for packets encapsulated by tunnel is disabled. If no custom profile is specified, the default profile is used.

| Parameter | Description |
|---|---|
| *<profile_name>* | Custom profile name. You can use the crypto ipsec profile command to create custom profiles. |

**Mode**

Interface Configuration

**Usage notes**

IPsec mode tunnels (IPv4 and IPv6) require this command for them to work. GRE IPv6 and L2TPv3 IPv6 tunnel have IPsec protection as an option.

**Examples**

To enable IPsec protection by using default profile, use the following commands:

```
awplus# configure terminal
awplus(config)# interface tunnel14
awplus(config-if)# tunnel protection ipsec
```

To enable IPsec protection by using a custom profile, use the following commands:

```
awplus(config)# interface tunnel14
awplus(config-if)# tunnel protection ipsec profile
my_profile
```

To disable IPsec protection for packets encapsulated by `tunnel14`, use the following commands:

```
awplus# configure terminal
awplus(config)# interface tunnel14
awplus(config-if)# no tunnel protection ipsec
```

**Related commands**

crypto ipsec profile

# tunnel remote name (IPsec)

**Overview** Use this command to specify a tunnel remote name to authenticate the tunnel's remote peer device when you apply tunnel protection ipsec (IPsec) to encrypt the packets and configure an ISAKMP key.

Use the **no** variant of this command to remove a previously configured tunnel remote name.

**Syntax**

```
tunnel remote name <remote-name>
no tunnel local name
```

| Parameter | Description |
|---|---|
| *<remote-name>* | Destination tunnel hostname |

**Default** The default tunnel remote name is the IP address of tunnel destination.

**Mode** Interface Configuration

**Examples** To configure tunnel remote name office2 for tunnel6, use the commands below:

```
awplus# configure terminal
awplus(config)# interface tunnel6
awplus(config-if)# tunnel remote name office2
```

To remove a configured tunnel local name for tunnel6, use the commands below:

```
awplus# configure terminal
awplus(config)# interface tunnel6
awplus(config-if)# no tunnel remote name
```

**Related commands** tunnel local name (IPsec)

# tunnel remote selector

**Overview** Use this command to specify a destination subnet for a traffic selector pair.

Use the **no** variant of this command to unset the remote subnet for a traffic selector pair so that it matches all destinations, i.e. 0.0.0.0/0 or ::/0 for IPv4 and IPv6, respectively. When local and remote subnets for a traffic selector pair are both unset, the traffic selector pair is removed.

**Syntax**

```
tunnel remote selector [<traffic-selector-ID>]
{<IPv4-subnet>|<IPv6-subnet>}
```

```
no tunnel remote selector [<traffic-selector-ID>]
```

| Parameter | Description |
|---|---|
| *<traffic-selector-ID>* | Traffic selector ID from 1 through 65535. If not specified the default value 1 is used. |
| *<ipv4-subnet>* | IPv4 subnet in the format A.B.C.D/M. |
| *<ipv6-subnet>* | IPv6 subnet in the format of X:X::X:X/M |

**Default** When no traffic selector pairs are configured there is an implicit traffic selector pair, where the local and remote subnets are 0.0.0.0/0 or ::/0 depending on the tunnel IPsec mode.

**Mode** Interface configuration

**Usage notes** A traffic selector pair is an agreement between IKE peers to permit trafic through a tunnel if the traffic matches a specified pair of local and remote subnets. When the remote selector is specified but the local selector is not, the selector pair implicitly matches all sources.

**Examples** To specify an IPv4 destination address as the traffic selector for the traffic to match for tunnel0, use the commands:

```
awplus# configure terminal
awplus(config)# interface tunnel0
awplus(config-if)# tunnel source eth1
awplus(config-if)# tunnel destination 10.0.0.2
awplus(config-if)# tunnel local name office
awplus(config-if)# tunnel mode ipsec ipv4
awplus(config-if)# tunnel local selector 192.168.1.0/24
awplus(config-if)# tunnel remote selector 192.168.2.0/24
```

When no traffic selector ID is specified the default ID value is used. By specifying a traffic selector ID, additional selector pairs can be configured.

To configure an additional source and destination traffic selector pair for the traffic to match for tunnel0, use the commands:

```
awplus(config-if)# tunnel local selector 5 192.168.1.0/24
awplus(config-if)# tunnel remote selector 5 192.168.2.0/24
```

To specify an IPv6 source address as the traffic selector for the traffic to match for tunnel0, use the commands:

```
awplus# configure terminal
awplus(config)# interface tunnel0
awplus(config-if)# tunnel source eth1
awplus(config-if)# tunnel destination 2001:db8:10::1
awplus(config-if)# tunnel local name office
awplus(config-if)# tunnel mode ipsec ipv6
awplus(config-if)# tunnel local selector 2001:db8:1::/64
awplus(config-if)# tunnel remote selector 2001:db8:2::/64
```

To configure an additional source and destination traffic selector pair for the traffic to match for tunnel0, use the commands:

```
awplus(config-if)# tunnel local selector 5 2001:db8:1::/64
awplus(config-if)# tunnel remote selector 5 2001:db8:2::/64
```

To unset the destination traffic selector for the traffic selector pair with ID 1, for tunnel6, use the commands:

```
awplus# configure terminal
awplus(config)# interface tunnel6
awplus(config-if)# no tunnel remote selector
```

or

```
awplus(config-if)# no tunnel remote selector 5
```

**Related commands**

tunnel local selector

tunnel selector paired

show interface tunnel (IPsec)

# tunnel security-reprocessing

**Overview**

Use this command to enable stream security reprocessing on all tunnel interfaces.

Use the **no** variant of this command to disable security reprocessing on all tunnel interfaces.

Note that tunnel security reprocessing increases the load on your device and reduces throughput. This is because traffic is processed twice through the DPI engine. Therefore, it should only be enabled if your solution requires it.

**Syntax**

```
tunnel security-reprocessing
no tunnel security-reprocessing
```

**Default**

Security reprocessing is disabled by default.

**Mode**

Global Configuration

**Usage notes**

Use this command when you need to reinspect the traffic in a tunnel terminating on the device using stream UTM features after tunnel headers and encryption have been removed. For a configuration example using this command, see the Internet Protocol Security (IPsec) Feature Overview and_Configuration Guide.

**Example**

To enable security reprocessing, use the commands:

```
awplus# configure terminal
awplus(config)# tunnel security-reprocessing
```

To disable security reprocessing, use the commands:

```
awplus# configure terminal
awplus(config)# no tunnel security-reprocessing
```

**Related commands**

show interface tunnel (GRE)

show interface tunnel (IPsec)

show interface tunnel (L2TPv3)

show interface tunnel (OpenVPN)

**Command changes**

Version 5.4.8-0.2: command added

# tunnel selector paired

**Overview**

Use this command when multiple selector pairs are configured. This command forces ISAKMP to use strict pairing and therefore create separate Phase 2 IPsec SAs between pairs of source and destination selectors, based on selector ID.

Use the **no** variant of this command to stop forcing strict selector ID pairing.

**Syntax**

```
tunnel selector paired
```

**Default**

Disabled

**Mode**

Interface mode for a tunnel

**Usage notes**

When this command is disabled, if you specify address selectors, the tunnel can permit any combination of matching sources and/or destinations. While this conforms to the RFC, it may not be the expected behavior and may cause the IPsec SA to either fail negotiation or fail to pass traffic correctly.

This command forces ISAKMP to create individual IPsec SAs for each pair of source and destination selectors that have the same selector ID. Only traffic that matches a selector pair is permitted to flow via the associated SA.

**Example**

To create a tunnel between 172.16.1.0/24 and 172.16.2.0/24, and also between 172.16.1.0/24 and any other destination, use the following tunnel selector commands:

```
awplus# configure terminal
awplus(config)# interface tunnel0
awplus(config-if)# tunnel local selector 2 172.16.1.0/24
awplus(config-if)# tunnel remote selector 2 172.16.2.0/24
awplus(config-if)# tunnel local selector 3 172.16.1.0/24
awplus(config-if)# tunnel remote selector 3 0.0.0.0/0
awplus(config-if)# tunnel selector paired
```

**Related commands**

tunnel local selector

tunnel remote selector

show interface tunnel (IPsec)

**Command changes**

Version 5.4.8-1.1: command added

# tunnel source (IPsec)

**Overview** Use this command to specify an IPv4 or IPv6 source address or interface name for packets being encapsulated in the IPsec tunnel. The source address should be an existing IPv4 address or IPv6 address or interface name configured for an interface.

Note that if the tunnel source interface has multiple IP addresses, for example, one primary and one or more secondary IP addresses, the lowest IP address on the interface is used for transporting the tunnel encapsulated traffic.

Use the **no** variant of this command to remove a tunnel source address for a tunnel interface.

**Syntax**

```
tunnel source {<interface-name>|<ipv4-address>|<ipv6-address>}
no tunnel source
{<interface-name>|<ipv4-address>|<ipv6-address>}
```

| Parameter | Description |
|---|---|
| *<interface-name>* | Interface name. |
| *<ipv4-address>* | The IPv4 address uses the format A.B.C.D. |
| *<ipv6-address>* | The IPv6 address uses the format X:X::X:X. |

**Mode** Interface Configuration

**Examples** To configure a source IPv4 address for IPsec tunnel45, use the commands:

```
awplus# configure terminal
awplus(config)# interface tunnel45
awplus(config-if)# tunnel mode ipsec ipv4
awplus(config-if)# tunnel source 192.168.1.1
```

To configure a source IPv6 address for IPsec tunnel45, use the commands:

```
awplus# configure terminal
awplus(config)# interface tunnel45
awplus(config-if)# tunnel mode ipsec ipv6
awplus(config-if)# tunnel source 2001:db8::
```

To configure a source interface for IPsec tunnel45, use the commands:

```
awplus# configure terminal
awplus(config)# interface tunnel45
awplus(config-if)# tunnel mode ipsec ipv4
awplus(config-if)# tunnel source eth1
```

To remove the source address of IPsec tunnel45, use the commands:

```
awplus# configure terminal
awplus(config)# interface tunnel45
awplus(config-if)# no tunnel source 192.168.1.1
```

**Related commands**

tunnel destination (IPsec)

# undebug isakmp

**Overview** Use this command to disable debugging ISAKMP.

To enable debugging ISAKMP, see debug isakmp.

**Syntax** `undebug [crypto] isakmp [info|trace|all]`

| Parameter | Description |
|---|---|
| `undebug` | Disable debugging function. |
| `crypto` | Security specific command. |
| `isakmp` | Internet Security Association Key Management Protocol provides a common framework for key management implementations. |
| `info` | Informational debug messages such as protocol events. |
| `trace` | Verbose debug messages including protocol events and message traces. |
| `all` | All debug enabled. |

**Mode** Privileged Exec

**Related commands** debug isakmp

no debug isakmp

# version (ISAKMP)

**Overview** Use this command to set the ISAKMP protocol version.

Use the **no** variant to set the protocol version to default (IKEv2).

**Syntax**

```
version {1 mode {aggressive|main}|2}
no version
```

| Parameter | Description |
|---|---|
| 1 | IKEv1 |
| main | IKEv1 Main mode. An IKE session begins with the initiator and recipient sending three two-way exchanges to define what encryption and authentication protocols are acceptable, how long keys should remain active, and whether perfect forward secrecy should be enforced. Main mode uses more packets for the process than Aggressive mode, but Main mode is considered more secure. |
| aggressive | IKEv1 Aggressive mode. The initiator and recipient accomplish the same objectives, but in only two exchanges. |
| 2 | IKEv2 |

**Default** If you do not specify the version, the default version is IKEv2

**Mode** IPsec ISAKMP Configuration

**Examples** To set the ISAKMP protocol version of profile "my_profile" to IKEv1 main mode, use the following commands:

```
awplus(config)# configure isakmp profile my_profile
awplus(config-isakmp-profile)# version 1 mode main
```

To set the version to its default, use the following command:

```
awplus# no version
```

**Related commands** crypto isakmp profile

**Validation Commands** show isakmp profile

# 75 GRE Tunneling Commands

## Introduction

**Overview** This chapter provides an alphabetical reference of commands used to configure IPv6 tunnels. For more information about IPv6 tunnels, see the Generic Routing Encapsulation (GRE) Feature Overview and_Configuration Guide.

**Command List**


- "interface tunnel (GRE)" on page 3524
- "local authentication" on page 3525
- "remote authentication" on page 3527
- "show interface tunnel (GRE)" on page 3529
- "tunnel checksum" on page 3530
- "tunnel dscp" on page 3531
- "tunnel destination (GRE)" on page 3532
- "tunnel endpoint" on page 3534
- "tunnel local name (GRE)" on page 3536
- "tunnel mode gre" on page 3537
- "tunnel mode gre multipoint" on page 3538
- "tunnel protection ipsec (GRE)" on page 3539
- "tunnel remote name (GRE)" on page 3540
- "tunnel security-reprocessing" on page 3541
- "tunnel source (GRE)" on page 3542
- "tunnel ttl" on page 3544

# interface tunnel (GRE)

**Overview**

Use this command to create a tunnel interface or to enter Interface mode to configure an existing tunnel. Tunnel interfaces are identified by an index identifier that is an integer in the range from 0 through 65535.

Use the **no** variant of this command to remove a previously created tunnel interface.

**Syntax**

```
interface tunnel<0-65535>
no interface tunnel<tunnel-index>
```

| Parameter | Description |
|---|---|
| *<0-65535>* | Specify a tunnel interface index identifier in the range from 0 through 65535. |

**Default**

Tunnel interfaces do not exist.

**Mode**

Global Configuration

**Usage notes**

After you have created the tunnel interface, use the **tunnel mode** command to enable the tunnel.

**Examples**

To configure a tunnel interface with index 30 and enable GRE, use the commands:

```
awplus# configure terminal
awplus(config)# interface tunnel30
awplus(config-if)# tunnel mode gre
```

To remove the GRE tunnel interface tunnel30, use the commands:

```
awplus# configure terminal
awplus(config)# no interface tunnel30
```

**Command changes**

Version 5.4.7-2.1: increased range for **tunnel** index identifiers.

# local authentication

**Overview** Use this command to specify the authentication method for the local device for a GRE Multipoint tunnel.

Use the **no** variant of this command to set the local authentication for an ISAKMP profile back to the default pre-shared.

**Syntax**

```
local authentication [pre-shared|eap-radius]
no local authentication
```

| Parameter | Description |
|---|---|
| `pre-shared` | Authenticate using pre-shared keys (default) |
| `eap-radius` | Authenticate using a radius server |

**Default** Pre-shared

**Mode** ISAKMP Profile configuration

**Usage notes** This command allows you to choose between pre-shared, where a fixed key is known by both ends and eap-radius, where a key is stored on a radius server.

- Local authentication can be reset back to pre-shared (the default) for the device to authenticate using pre-shared keys.
- Local authentication can be set to eap-radius for the device to authenticate using a radius server.

**Examples** To configure local authentication for an ISAKMP profile, use the commands:

```
awplus# configure terminal
awplus(config)# configure isakmp profile my_profile
awplus(config-isakmp-profile)# local authentication eap-radius
```

To set the local authentication for an ISAKMP profile back to the default (pre-shared), use the commands:

```
awplus# configure terminal
awplus(config)# configure isakmp profile my_profile
awplus(config-isakmp-profile)# no local authentication
```

**Related commands**

remote authentication

show interface tunnel (GRE)

show isakmp profile

tunnel endpoint

tunnel mode gre multipoint

**Command changes** Version 5.4.9-0.1: command added

# remote authentication

**Overview**

Use this command to specify the authentication method for the remote device for a GRE Multipoint tunnel.

Use the **no** variant of this command to set the remote authentication back to the default (pre-shared).

**Syntax**

```
remote authentication [pre-shared|eap-radius]
no remote authentication
```

| Parameter | Description |
|---|---|
| `pre-shared` | Authenticate using pre-shared keys (default) |
| `eap-radius` | Authenticate using a radius server |

**Default**

Pre-shared

**Mode**

ISAKMP profile configuration

**Usage notes**

This command allows you to choose between pre-shared, where a fixed key is known by both ends and eap-radius, where a key is stored on a radius server.

- Remote authentication can be reset back to pre-shared (the default) for the device to authenticate using pre-shared keys.
- Remote authentication can be set to eap-radius for the device to authenticate using a radius server.

**Examples**

To configure remote authentication for an ISAKMP profile, use the following commands:

```
awplus# configure terminal
awplus(config)# configure isakmp profile my_profile
awplus(config-isakmp-profile)# remote authentication
eap-radius
```

To configure remote authentication for an ISAKMP profile back to the default (pre-shared), use the following commands:

```
awplus# configure terminal
awplus(config)# configure isakmp profile my_profile
awplus(config-isakmp-profile)# no remote authentication
```

**Related commands**

local authentication

show interface tunnel (GRE)

show isakmp profile

tunnel endpoint

tunnel mode gre multipoint

**Command changes**

Version 5.4.9-0.1: command added

# show interface tunnel (GRE)

**Overview** Use this command to display status information of tunnels.

The tunnel remains inactive if no valid tunnel source or tunnel destination is configured.

**Syntax** `show interface tunnel<tunnel-index>`

| Parameter | Description |
|---|---|
| `tunnel` | Specify this parameter to display tunnel status information of a given tunnel identified by the <0-65535> parameter. |
| *<0-65535>* | Specify a tunnel index in the range from 0 through 65535. |

**Mode** Privileged Exec

**Example** To display status information for GRE tunnel `tunnel20`, use the command:

```
awplus# show interface tunnel20
```

Figure 75-1: Example output from the **show interface tunnel** command

```
awplus#show interface tunnel20
Interface tunnel20
  Link is UP, administrative state is UP
  Hardware is Tunnel
  IPv4 address 172.16.1.1/24 pointopoint 172.16.1.255
  index 4750 metric 1 mtu 1480
  arp ageing timeout 300
  <UP,POINTOPOINT,RUNNING,MULTICAST>
  SNMP link-status traps: Disabled
  Tunnel source 192.168.1.1, destination 192.168.2.1
  Tunnel local 192.168.1.1, remote 192.168.2.1
  Tunnel protocol/transport gre, key disabled, sequencing disabled
  Tunnel TTL inherit
  Checksumming of packets disabled, path MTU discovery disabled
    input packets 0, bytes 0, dropped 0, multicast packets 0
    output packets 0, bytes 0, multicast packets 0 broadcast
packets 0
  Time since last state change: 0 days 00:05:25
```

# tunnel checksum

**Overview** Use this command to enable GRE tunnel checksum insertion and checking. This results in the first two bytes after the protocol field in the IPv4 header containing the checksum. The tunnel checksum is used to detect packet corruption.

Use the **no** variant of this command to disable checksum insertion and checking.

**Syntax**

```
tunnel checksum
no tunnel checksum
```

**Default** Checksum insertion and checking is disabled.

**Mode** Interface Configuration

**Examples** To enable checksum insertion and checking, use the commands:

```
awplus# configure terminal
awplus(config)# interface tunnel2
awplus(config-if)# tunnel mode gre
awplus(config-if)# tunnel checksum
```

To disable checksum insertion and checking, use the commands:

```
awplus# configure terminal
awplus(config)# interface tunnel2
awplus(config-if)# no tunnel checksum
```

# tunnel dscp

**Overview**

Use this command to configure the Differentiated Services Code Point (DSCP) value for the DSCP field in the packet header that encapsulates the tunneled packets.

Use the **no** variant of this command to reset the DSCP field to its default value.

**Syntax**

```
tunnel dscp <0-63>
no tunnel dscp
```

| Parameter | Description |
|---|---|
| *<0-63>* | Specify the DSCP value in the range from 0 through 63 for the DSCP field in the packet header that encapsulates the tunneled packets. |

**Default**

The IPv4 DSCP field value is inherited from the inner header to the outer header.

**Mode**

Interface Configuration

**Examples**

To configure the DSCP value to 10 for tunnel2, use the commands:

```
awplus# configure terminal
awplus(config)# interface tunnel2
awplus(config-if)# tunnel dscp 10
```

To remove a configured DSCP value for tunnel2, use the commands:

```
awplus# configure terminal
awplus(config)# interface tunnel2
awplus(config-if)# no tunnel dscp
```

**Related commands**

interface tunnel (IPv6)

interface tunnel (GRE)

# tunnel destination (GRE)

**Overview** Use this command to specify a tunnel destination for the remote end of the tunnel. Tunnel destination can be specified by using a destination network name or an IPv4 address.

Use the **no** variant of this command to remove a configured tunnel destination.

**Syntax**

```
tunnel destination {<ipv4-addr>|<destination-network-name>}
no tunnel destination
```

| Parameter | Description |
|---|---|
| *<ipv4-addr>* | Specify the tunnel destination IPv4 address in the dotted decimal format A.B.C.D.<br>The endpoints of the tunnel must be configured by mirroring IP addresses, that is, the tunnel source on one endpoint must be specified as the tunnel destination on the other endpoint. |
| *<destination-network-name>* | Destination network name.<br>If the destination network name cannot be resolved, then the GRE tunnel remains inactive. |

**Mode** Interface Configuration

**Examples** To configure an IPv4 tunnel destination by using an IPv4 address, use the commands:

```
awplus# configure terminal
awplus(config)# interface tunnel40
awplus(config-if)# tunnel mode gre
awplus(config-if)# tunnel destination 2.2.2.2
```

To configure a GRE tunnel destination by using a destination network name, use the commands:

```
awplus# configure terminal
awplus(config)# interface tunnel40
awplus(config-if)# tunnel mode gre
awplus(config-if)# tunnel destination
corporate_lan.example.com
```

To remove a GRE tunnel destination, use the commands:

```
awplus# configure terminal
awplus(config)# interface tunnel40
awplus(config-if)# no tunnel destination
```

**Related commands**

interface tunnel (GRE)

tunnel mode gre

tunnel source (GRE)

# tunnel endpoint

**Overview** Use this command to set an endpoint to a GRE Multipoint tunnel interface.

Use the **no** variant of this command to remove an existing configured endpoint.

**Syntax**

```
tunnel endpoint {<ipv4-addr>|<network-name>|dynamic}
no tunnel endpoint {<ipv4-addr>|<network-name>|dynamic}
```

| Parameter | Description |
|---|---|
| *<ipv4-address>* | Specify the tunnel endpoint IPv4 address in the dotted decimal format A.B.C.D. |
| *<network-name>* | Specify the endpoint network name. |
| dynamic | Dynamically learn tunnel endpoints. |

**Default** Virtual tunnel interfaces have no endpoints set.

**Mode** Interface Configuration

**Examples** To configure an IPv4 tunnel endpoint for tunnel6, use the commands:

```
awplus# configure terminal
awplus(config)# interface tunnel6
awplus(config-if)# tunnel endpoint 192.168.100.1
```

To remove the IPv4 tunnel endpoint for tunnel6, use the commands:

```
awplus# configure terminal
awplus(config)# interface tunnel6
awplus(config-if)# no tunnel endpoint 192.168.100.1
```

To configure a tunnel endpoint network name “example_lan.com” for tunnel6, use the commands:

```
awplus# configure terminal
awplus(config)# interface tunnel6
awplus(config-if)# tunnel endpoint example_lan.com
```

To remove the tunnel endpoint network name “example_lan.com” for tunnel6, use the commands:

```
awplus# configure terminal
awplus(config)# interface tunnel6
awplus(config-if)# tunnel endpoint example_lan.com
```

To configure a dynamic tunnel endpoint for tunnel6, use the commands:

```
awplus# configure terminal
awplus(config)# interface tunnel6
awplus(config-if)# tunnel endpoint dynamic
```

To remove the dynamic tunnel endpoint for tunnel6, use the commands:

```
awplus# configure terminal
awplus(config)# interface tunnel6
awplus(config-if)# no tunnel endpoint dynamic
```

**Related commands**

local authentication

remote authentication

show interface tunnel (GRE)

tunnel mode gre multipoint

**Command changes**

Version 5.4.9-0.1: command added

# tunnel local name (GRE)

**Overview**

Use this command to specify an IPsec tunnel hostname to send to the peer for authentication when you apply tunnel protection ipsec (GRE) to encrypt the packets and configure an ISAKMP key.

Use the **no** variant of this command to remove a previously configured IPsec tunnel hostname.

**Syntax**

```
tunnel local name <local-name>
no tunnel local name
```

| Parameter | Description |
|---|---|
| `<local-name>` | Source tunnel hostname. |

**Default**

The default tunnel local name is the IP address of tunnel source.

**Mode**

Interface Configuration

**Examples**

To configure the tunnel local name office1 for `tunnel6`, use the commands below:

```
awplus# configure terminal
awplus(config)# interface tunnel6
awplus(config-if)# tunnel local name office1
```

To remove a configured tunnel local name for `tunnel6`, use the commands below:

```
awplus# configure terminal
awplus(config)# interface tunnel6
awplus(config-if)# no tunnel local name
```

**Related commands**

tunnel remote name (GRE)

# tunnel mode gre

**Overview** Use this command to configure the encapsulation tunneling mode to use. This command sets GRE IPv4 or IPv6 as the payload over IPv4 or IPv6 tunneling.

Use the **no** variant of this command to remove an established tunnel.

**Syntax**

```
tunnel mode gre [ipv6]
no tunnel mode
```

| Parameter | Description |
|---|---|
| `gre ipv6` | Specify GRE IPv4 or IPv6 as the payload over IPv6 tunneling. IPv6 is the delivery protocol. |

**Default** Virtual tunnel interfaces have no mode set by default. If you specify a mode of **gre**, the delivery protocol is IPv4 unless you specify IPv6.

**Mode** Interface Configuration

**Usage notes** A tunnel will not become operational until it is configured with this command.

**Examples** To configure GRE as the encapsulation mode for tunnel2, use the commands:

```
awplus# configure terminal
awplus(config)# interface tunnel2
awplus(config-if)# tunnel mode gre
```

To remove a configured GRE tunnel mode for tunnel2, use the commands:

```
awplus# configure terminal
awplus(config)# interface tunnel2
awplus(config-if)# no tunnel mode
```

**Related commands** interface tunnel (GRE)

# tunnel mode gre multipoint

**Overview**

Use this command to set the tunnel mode to GRE Multipoint.

Use the **no** variant of this command to unconfigure this tunnel mode.

**Syntax**

```
tunnel mode gre multipoint
no tunnel mode
```

**Default**

Virtual tunnel interfaces have no mode set.

**Mode**

Interface Configuration

**Examples**

To configure gre multipoint tunnel mode for tunnel6, use the commands:

```
awplus# configure terminal
awplus(config)# interface tunnel6
awplus(config-if)# tunnel mode gre multipoint
```

To remove the configured gre multipoint tunnel mode for tunnel6, use the commands:

```
awplus# configure terminal
awplus(config)# interface tunnel6
awplus(config-if)# no tunnel mode
```

**Related commands**

aaa authentication isakmp

crypto isakmp key

local authentication

remote authentication

show interface tunnel (GRE)

tunnel endpoint

**Command changes**

Version 5.4.9-0.1: command added

# tunnel protection ipsec (GRE)

**Overview**

Use this command to optionally enable IPsec protection for packets encapsulated by this tunnel.

Use the **no** variant to disable IPsec protection.

**Syntax**

```
tunnel protection ipsec [profile <ipsec-profile>]
no tunnel protection ipsec
```

| Parameter | Description |
|---|---|
| *<ipsec-profile>* | The name of an optional custom IPsec profile (crypto ipsec profile command) to use to protect this tunnel. |

**Default**

IPsec protection for packets encapsulated by tunnel is disabled.

**Mode**

Interface Configuration

**Usage notes**

You also need to configure a pre-shared key in conjunction with this command. See the crypto isakmp key command for more information about configuring the pre-shared key.

**Examples**

To enable IPsec protection for packets encapsulated by `tunnel14`, use the commands below:

```
awplus# configure terminal
awplus(config)# interface tunnel14
awplus(config-if)# tunnel protection ipsec
```

To disable IPsec protection for packets encapsulated by `tunnel14`, use the commands below:

```
awplus# configure terminal
awplus(config)# interface tunnel14
awplus(config-if)# no tunnel protection ipsec
```

**Related commands**

crypto ipsec profile

crypto isakmp key

show isakmp key (IPsec)

# tunnel remote name (GRE)

**Overview** Use this command to specify a tunnel remote name to authenticate the tunnel's remote peer device when you apply tunnel protection ipsec (GRE) to encrypt the packets and configure an ISAKMP key.

Use the **no** variant of this command to remove a previously configured tunnel remote name.

**Syntax**

```
tunnel remote name <remote-name>
no tunnel local name
```

| Parameter | Description |
|---|---|
| *<remote-name>* | Destination tunnel hostname |

**Default** The default tunnel remote name is the IP address of tunnel destination.

**Mode** Interface Configuration

**Examples** To configure tunnel remote name `office2` for `tunnel6`, use the commands below:

```
awplus# configure terminal
awplus(config)# interface tunnel6
awplus(config-if)# tunnel remote name office2
```

To remove a configured tunnel local name for `tunnel6`, use the commands below:

```
awplus# configure terminal
awplus(config)# interface tunnel6
awplus(config-if)# no tunnel remote name
```

**Related commands** tunnel local name (GRE)

# tunnel security-reprocessing

**Overview**

Use this command to enable stream security reprocessing on all tunnel interfaces.

Use the **no** variant of this command to disable security reprocessing on all tunnel interfaces.

Note that tunnel security reprocessing increases the load on your device and reduces throughput. This is because traffic is processed twice through the DPI engine. Therefore, it should only be enabled if your solution requires it.

**Syntax**

```
tunnel security-reprocessing
no tunnel security-reprocessing
```

**Default**

Security reprocessing is disabled by default.

**Mode**

Global Configuration

**Usage notes**

Use this command when you need to reinspect the traffic in a tunnel terminating on the device using stream UTM features after tunnel headers and encryption have been removed. For a configuration example using this command, see the Internet Protocol Security (IPsec) Feature Overview and_Configuration Guide.

**Example**

To enable security reprocessing, use the commands:

```
awplus# configure terminal
awplus(config)# tunnel security-reprocessing
```

To disable security reprocessing, use the commands:

```
awplus# configure terminal
awplus(config)# no tunnel security-reprocessing
```

**Related commands**

show interface tunnel (GRE)

show interface tunnel (IPsec)

show interface tunnel (L2TPv3)

show interface tunnel (OpenVPN)

**Command changes**

Version 5.4.8-0.2: command added

# tunnel source (GRE)

**Overview** Use this command to specify a tunnel source for the tunnel interface. Tunnel source can be specified by using an interface name or an IPv4 address. The source address must be an existing IPv4 address configured for an interface.

Use the **no** variant of this command to remove a tunnel source for a tunnel interface.

**Syntax**

```
tunnel source {<ipv4-addr>|<interface-name>}
no tunnel source
```

| Parameter | Description |
|---|---|
| *<ipv4-addr>* | Specify the tunnel source IPv4 address for the GRE tunnel interface in the dotted decimal format A.B.C.D.<br>The endpoints of the tunnel must be configured by mirroring IP addresses, that is, the tunnel source on one endpoint must be specified as the tunnel destination on the other endpoint. |
| *<interface-name>* | Available interface name. Any AlliedWare Plus interface type (eth, vlan, ppp, tunnel, lo and so on).<br>Using interface name can minimize the number of user-configured IP addresses and allow the tunnel source IP address to be dynamically issued via, for example, DHCP. |

**Mode** Interface Configuration

**Examples** To configure a GRE tunnel source IPv4 address, use the commands:

```
awplus# configure terminal
awplus# interface eth1
awplus(config-if)# ip address 1.1.1.1/24
awplus(config-if)# interface tunnel1
awplus(config-if)# tunnel mode gre
awplus(config-if)# tunnel source 1.1.1.1
```

To use an interface name as the tunnel source, use the commands:

```
awplus# configure terminal
awplus(config)# interface tunnel2
awplus(config-if)# tunnel mode gre
awplus(config-if)# tunnel source eth2
```

To remove a GRE tunnel source, use the commands:

```
awplus# configure terminal
awplus(config)# interface tunnel1
awplus(config-if)# no tunnel source
```

**Related commands**

interface tunnel (GRE)

tunnel destination (GRE)

tunnel mode gre

# tunnel ttl

**Overview** Use this command to configure the value to use for the Time to Live (TTL) field in the IPv4 header that encapsulates the tunneled IPv4 or IPv6 packets.

Use the **no** variant of this command to set the TTL value to its default.

**Syntax**

```
tunnel ttl <1-255>
no tunnel ttl
```

| Parameter | Description |
|---|---|
| *<1-255>* | TTL value from 1 through 255. |

**Default** The default TTL value is inherited from the encapsulated packet.

**Mode** Interface Configuration

**Example** To set the TTL value of the packet to 255, use the commands:

```
awplus# configure terminal
awplus(config)# interface tunnel20
awplus(config-if)# tunnel ttl 255
```

To remove the configured TTL value of the packet, use the commands:

```
awplus# configure terminal
awplus(config)# interface tunnel20
awplus(config-if)# no tunnel ttl
```

**Related commands** interface tunnel (IPv6)

interface tunnel (GRE)

# 76 OpenVPN Commands

## Introduction

This chapter provides an alphabetical reference of commands used to configure AlliedWare Plus OpenVPN.

For introductory information about AlliedWare Plus OpenVPN, including overview and configuration information, see the OpenVPN Feature Overview and Configuration_Guide.

The table below lists the OpenVPN commands and their applicable modes.

Figure 76-1: OpenVPN commands and applicable modes

| Mode | Command |
|---|---|
| Privileged Exec | show openvpn connections |
| | show openvpn connections detail |
| Interface Configuration | tunnel mode openvpn tap |
| | tunnel mode openvpn tun |
| | tunnel openvpn port |
| | tunnel openvpn tagging |

**Command List**


- "ip tcp adjust-mss" on page 3547
- "ipv6 tcp adjust-mss" on page 3549
- "show interface tunnel (OpenVPN)" on page 3551
- "show openvpn connections" on page 3552
- "show openvpn connections detail" on page 3553
- "tunnel openvpn authentication" on page 3554
- "tunnel openvpn cipher" on page 3555

- "tunnel mode openvpn tap" on page 3557
- "tunnel mode openvpn tun" on page 3558
- "tunnel openvpn expiry-bytes" on page 3559
- "tunnel openvpn expiry-seconds" on page 3560
- "tunnel openvpn port" on page 3561
- "tunnel openvpn tagging" on page 3562
- "tunnel security-reprocessing" on page 3563

# ip tcp adjust-mss

**Overview** Use this command to set the Maximum Segment Size (MSS) size for an interface, where MSS is the maximum TCP data packet size that the interface can transmit before fragmentation.

Use the **no** variant of this command to remove a previously specified MSS size for a PPP interface, and restore the default MSS size.

**Syntax**

```
ip tcp adjust-mss {<mss-size>|pmtu}
no ip tcp adjust-mss
```

| Parameter | Description |
|---|---|
| *<mss-size>* | <64-1460> Specifies the MSS size in bytes. |
| pmtu | Adjust TCP MSS automatically with respect to the MTU on the interface. |

**Default** The default setting allows a TCP server or a TCP client to set the MSS value for itself.

**Mode** Interface Configuration

**Usage notes** When a host initiates a TCP session with a server it negotiates the IP segment size by using the MSS option field in the TCP packet. The value of the MSS option field is determined by the Maximum Transmission Unit (MTU) configuration on the host.

You can set a feasible MSS value on the following interfaces:

- PPP
- Ethernet
- Tunnel
- VLAN

**Examples** To configure an MSS size of 1452 bytes on PPP interface ppp0, use the commands:

```
awplus# configure terminal
awplus(config)# interface ppp0
awplus(config-if)# ip tcp adjust-mss 1452
```

To configure an MSS size of 1452 bytes on Ethernet interface eth1, use the commands:

```
awplus# configure terminal
awplus(config)# interface eth1
awplus(config-if)# ip tcp adjust-mss 1452
```

To configure an MSS size of 1452 bytes on interface tunnel2, use the commands:

```
awplus# configure terminal
awplus(config)# interface tunnel2
awplus(config-if)# ip tcp adjust-mss 1452
```

To restore the MSS size to the default size on PPP interface ppp0, use the commands:

```
awplus# configure terminal
awplus(config)# interface ppp0
awplus(config-if)# no ip tcp adjust-mss
```

**Related commands**

mtu (PPP)

show interface

show interface (PPP)

show interface tunnel (GRE)

**Command changes**

Version 5.4.8-2.1: interface tunnel example added

# ipv6 tcp adjust-mss

**Overview** Use this command to set the IPv6 Maximum Segment Size (MSS) size for an interface, where MSS is the maximum TCP data packet size that the interface can transmit before fragmentation.

Use the **no** variant of this command to remove a previously specified MSS size for a PPP interface, and restore the default MSS size.

**Syntax**

```
ipv6 tcp adjust-mss {<mss-size>|pmtu}
no ipv6 tcp adjust-mss
```

| Parameter | Description |
|---|---|
| *<mss-size>* | <64-1460> Specifies the MSS size in bytes. |
| pmtu | Adjust TCP MSS automatically with respect to the MTU on the interface. |

**Default** The default setting allows a TCP server or a TCP client to set the MSS value for itself.

**Mode** Interface Configuration

**Usage notes** When a host initiates a TCP session with a server it negotiates the IP segment size by using the MSS option field in the TCP packet. The value of the MSS option field is determined by the Maximum Transmission Unit (MTU) configuration on the host.

You can set a feasible MSS value on the following interfaces:

- PPP
- Ethernet
- Tunnel
- VLAN

**Examples** To configure an IPv6 MSS size of 1452 bytes on PPP interface ppp0, use the commands:

```
awplus# configure terminal
awplus(config)# interface ppp0
awplus(config-if)# ipv6 tcp adjust-mss 1452
```

To configure an IPv6 MSS size of 1452 bytes on Ethernet interface eth1, use the commands:

```
awplus# configure terminal
awplus(config)# interface eth1
awplus(config-if)# ipv6 tcp adjust-mss 1452
```

To adjust IPv6 TCP MSS automatically with respect to the MTU on interface tunnel2, use the commands:

```
awplus# configure terminal
awplus(config)# interface tunnel2
awplus(config-if)# ipv6 tcp adjust-mss pmtu
```

To restore the MSS size to the default size on PPP interface ppp0, use the commands:

```
awplus# configure terminal
awplus(config)# interface ppp0
awplus(config-if)# no ipv6 tcp adjust-mss
```

**Related commands**

mtu (PPP)

show interface

show interface (PPP)

show interface tunnel (GRE)

**Command changes**

Version 5.4.8-2.1: interface tunnel example added

# show interface tunnel (OpenVPN)

**Overview** Use this command to display status information of a tunnel.

The tunnel remains inactive if no valid tunnel source or tunnel destination is configured.

**Syntax** `show interface tunnel<tunnel-index>`

| Parameter | Description |
|---|---|
| *<tunnel-index>* | The tunnel index in the range from 0 to 65535. |

**Mode** Privileged Exec

**Examples** To display brief status information for OpenVPN tunnel0, enter the command below:

```
awplus# show interface tunnel0
```

**Output** Figure 76-2: Example output from the **show interface tunnel** command

```
awplus#show interface tunnel0
Interface tunnel0
  Link is UP, administrative state is UP
  Hardware is Tunnel
  IPv4 address 192.168.1.1/24 pointopoint 192.168.1.255
  IPv6 address 2001:db8:1::1/64
  IPv6 address fe80::200:cdff:fe38:111/64
  index 12 metric 1 mtu 1500
  <UP,POINTOPOINT,RUNNING,MULTICAST>
  SNMP link-status traps: Disabled
  Tunnel source UNKNOWN, destination UNKNOWN
  Tunnel name local AR3050S, remote  UNKNOWN
  Tunnel ID local (not set), remote (not set)
  Tunnel protocol/transport openvpn tun, key disabled, sequencing disabled
  Tunnel TTL -
  Checksumming of packets disabled, path MTU discovery disabled
    input packets 0, bytes 0, dropped 0, multicast packets 0
    output packets 8, bytes 488, multicast packets 0 broadcast packets 0
  Time since last state change: 0 days 00:00:36
```

**Command changes** Version 5.5.0-2.1: command added to AR1050V

# show openvpn connections

**Overview** Use this command to show information about connected OpenVPN users.

**Syntax** `show openvpn connections`

**Mode** Privileged Exec

**Examples** To show information about connected OpenVPN users, use the command:

```
awplus# show openvpn connections
```

**Output** Figure 76-3: Example output from the **show openvpn connections** command

```
awplus#show openvpn connections

Maximum connections: 100

Interface: tunnel0
                                        Rx      Tx
Username    Real Address                Bytes   Bytes   Connected Since
-------------------------------------------------------------------------------
foo         ::ffff:192.168.1.2          3553    3906    Wed Aug 13 01:09:07 2014
```

**Related commands** show openvpn connections detail

**Command changes** Version 5.5.0-2.1: command added to AR1050V

# show openvpn connections detail

**Overview** Use this command to show detailed information about connected OpenVPN users.

Note that in the output, parameters (such as Route, Address, DNS Server) for a specific user may vary because the parameters depend on the configuration information of the RADIUS server associated with the user.

**Syntax**

```
show openvpn connections detail
```

**Mode** Privileged Exec

**Examples** To show detailed information about connected OpenVPN users, use the command:

```
awplus# show openvpn connections detail
```

**Output** Figure 76-4: Example output from the **show openvpn connections detail** command

```
awplus#show openvpn connections detail

Interface: tunnel0
 Username: user1
  Route:      192.168.20.0 255.255.255.0 192.168.10.2
  Address:    192.168.10.3 255.255.255.0
  DNS Server: 192.168.10.253
  DNS Server: 192.168.10.254
  VID:        20
 Username: user2
  Route:      192.168.20.0 255.255.255.0 192.168.10.2
  Address:    192.168.10.4 255.255.255.0
  DNS Server: 192.168.10.253
  DNS Server: 192.168.10.254
  VID:        20
```

**Related commands** show openvpn connections

**Command changes** Version 5.5.0-2.1: command added to AR1050V

# tunnel openvpn authentication

**Overview**

Use this command to configure the data channel authentication digest for an OpenVPN tunnel.

Use the **no** variant of this command to set the data channel authentication digest for an OpenVPN tunnel to its default value of SHA1.

**Syntax**

```
tunnel openvpn authentication {sha1|sha256}
no tunnel openvpn authentication
```

| Parameter | Description |
|---|---|
| sha1 | Use Secure Hash Standard with 160-bit digest size as the data channel authentication digest. |
| sha256 | Use Secure Hash Standard with 256-bit digest size as the data channel authentication digest. |

**Default**

SHA1

**Mode**

Interface configuration

**Usage notes**

You need to configure the client to use the same setting as the server. To do this, include one of the following lines in your client's OpenVPN configuration (.ovpn) file:

| Setting | Line |
|---|---|
| SHA1 | auth SHA1 |
| SHA256 | auth SHA256 |

**Example**

To configure tunnel 5, which is an OpenVPN tunnel, to use SHA256 data channel authentication, use the commands:

```
awplus# configure terminal
awplus(config)# interface tunnel5
awplus(config-if)# tunnel openvpn authentication SHA256
```

**Related commands**

tunnel openvpn cipher

**Command changes**

Version 5.4.7-0.1: command added

Version 5.5.0-2.1: command added to AR1050V

# tunnel openvpn cipher

**Overview** Use this command to configure the data channel encryption cipher for an OpenVPN tunnel.

Use the **no** variant of this command to set the data channel encryption cipher for an OpenVPN tunnel to its default value of AES-128.

**Syntax**

```
tunnel openvpn cipher {aes128|aes256}
no tunnel openvpn cipher
```

| Parameter | Description |
|---|---|
| aes128 | Use Advanced Encryption Standard symmetric key block cipher with a 128-bit key as the data channel encryption cipher. |
| aes256 | Use Advanced Encryption Standard symmetric key block cipher with a 256-bit key as the data channel encryption cipher. |

**Default** AES-128

**Mode** Interface configuration

**Usage notes** You need to configure the client to use the same setting as the server. To do this, include one of the following lines in your client's OpenVPN configuration (.ovpn) file:

| Setting | Line |
|---|---|
| AES-128 | cipher AES-128-CBC |
| AES-256 | cipher AES-256-CBC |

For example, consider a client file tun.ovpn that has the following settings:

```
# tun.ovpn
client
auth-user-pass
cipher AES-128-CBC
dev tap
proto udp
remote 192.168.1.1
ca c:/users/support/cacert.pem
verb 7
```

To change the client to AES-256, replace the line "cipher AES-128-CBC" with "cipher AES-256-CBC".

**Example**

To configure tunnel 5, which is an OpenVPN tunnel, to use AES-256 data channel encryption, use the commands:

```
awplus# configure terminal
awplus(config)# interface tunnel5
awplus(config-if)# tunnel openvpn cipher aes256
```

**Related commands**

tunnel openvpn authentication

**Command changes**

Version 5.4.7-0.1: command added

Version 5.5.0-2.1: command added to AR1050V

# tunnel mode openvpn tap

**Overview**

Use this command to set the tunnel mode to OpenVPN TAP for a tunnel interface.

Use the **no** variant of this command to remove the mode.

TAP is a virtual network device. TAP creates a Virtual Tunnel Interface (VTI) that carries layer 2 frames. You may want to use TAP in the following scenarios:

- You want to use bridges to transport Ethernet frames
- You want to transport any network protocol, such as IPv4, IPv6, IPX

Note that TAP will cause broadcast overhead on the VPN tunnel and add the overhead of Ethernet headers on all packets transported over the VPN tunnel.

Note that the distribution of client IP addresses through DHCP is only supported in TAP mode.

**Syntax**

```
tunnel mode openvpn tap
no tunnel mode
```

**Mode**

Interface Configuration

**Examples**

To set tunnel5 to be an OpenVPN tunnel in TAP mode, use the commands:

```
awplus# configure terminal
awplus(config)# interface tunnel5
awplus(config-if)# tunnel mode openvpn tap
```

To remove the configured mode for tunnel5, use the commands:

```
awplus# configure terminal
awplus(config)# interface tunnel5
awplus(config-if)# no tunnel mode
```

**Related commands**

tunnel mode openvpn tun

**Command changes**

Version 5.5.0-2.1: command added to AR1050V

# tunnel mode openvpn tun

**Overview**

Use this command to set the tunnel mode to OpenVPN TUN for a tunnel interface.

Use the **no** variant of this command to remove the mode.

TUN is a virtual network device. TUN creates a Virtual Tunnel Interface (VTI) that carries layer 3 packets. You may want to use TUN in the following scenarios:

- You want to transport traffic that is destined for the VPN client
- You want to transport only layer 3 packets
- You want to support VPN on mobile devices

Note that TUN cannot be used in bridges and broadcast traffic is not transported in TUN mode.

**Syntax**

```
tunnel mode openvpn tun
no tunnel mode
```

**Mode**

Interface Configuration

**Examples**

To set tunnel5 to be an OpenVPN tunnel in TUN mode, use the commands:

```
awplus# configure terminal
awplus(config)# interface tunnel5
awplus(config-if)# tunnel mode openvpn tun
```

To remove the configured mode for tunnel5, use the commands:

```
awplus# configure terminal
awplus(config)# interface tunnel5
awplus(config-if)# no tunnel mode
```

**Related commands**

tunnel mode openvpn tap

**Command changes**

Version 5.5.0-2.1: command added to AR1050V

# tunnel openvpn expiry-bytes

**Overview**

Use this command to change how the firewall decides when to renegotiate client keys. By default, client keys are renegotiated after an hour; you can use this command to base rekeying on data usage instead of time.

Use the **no** variant of this command to return to time-based rekeying instead.

**Syntax**

```
tunnel openvpn expiry-bytes <0-4294967295>
no tunnel openvpn expiry-bytes
```

| Parameter | Description |
|---|---|
| `expiry-bytes <0-4294967295>` | The number of bytes of traffic after which the firewall renegotiates client keys. A value of 0 bytes means that keys are not renegotiated after the VPN is formed. Otherwise, setting the expiry-bytes to a non-zero value will cause a rekey when the firewall has received that many bytes of traffic. |

**Default**

Not configured - the firewall renegotiates keys every hour instead.

**Mode**

Interface mode for a tunnel

**Example**

To configure tunnel2 to rekey after 1 GB of traffic, use the following commands:

```
awplus# configure terminal
awplus(config)# interface tunnel2
awplus(config-if)# tunnel openvpn expiry-bytes 1000000000
```

To return tunnel2 to the default of rekeying hourly, use the following commands:

```
awplus# configure terminal
awplus(config)# interface tunnel2
awplus(config-if)# no tunnel openvpn expiry-bytes
```

**Related commands**

tunnel openvpn expiry-seconds

**Command changes**

Version 5.4.7-0.1: command added

Version 5.5.0-2.1: command added to AR1050V

# tunnel openvpn expiry-seconds

**Overview**

Use this command to change when client keys are renegotiated. By default, client keys are renegotiated after an hour; you can use this command to turn off renegotiation or to change that time period.

Use the **no** variant of this command to return to the default of 1 hour.

**Syntax**

```
tunnel openvpn expiry-seconds <0-4294967295>
no tunnel openvpn expiry-seconds
```

| Parameter | Description |
|---|---|
| `expiry-seconds <0-4294967295>` | The length of time after which the firewall renegotiates client keys. A value of 0 seconds means that keys are not renegotiated after the VPN is formed. Otherwise, setting the expiry-seconds to a non-zero timer value will cause a rekey when that time is exceeded. |

**Default**

3600 seconds (1 hour).

**Mode**

Interface mode for a tunnel

**Example**

To configure tunnel2 to rekey every 30 minutes, use the following commands:

```
awplus# configure terminal
awplus(config)# interface tunnel2
awplus(config-if)# tunnel openvpn expiry-seconds 1800
```

To return tunnel2 to the default of rekeying hourly, use the following commands:

```
awplus# configure terminal
awplus(config)# interface tunnel2
awplus(config-if)# no tunnel openvpn expiry-seconds
```

**Related commands**

tunnel openvpn expiry-bytes

**Command changes**

Version 5.4.7-0.1: command added

Version 5.5.0-2.1: command added to AR1050V

# tunnel openvpn port

**Overview**

Use this command to specify the UDP listening port that is used to receive OpenVPN tunnel connections.

Use the **no** variant to set the port number to its default value which is 1194.

**Syntax**

```
tunnel openvpn port <1-65535>
no tunnel openvpn port
```

| Parameter | Description |
|---|---|
| *<1-65535>* | Port number from 1 through 65535. |

**Default**

The default UDP port number is 1194.

**Mode**

Interface Configuration

**Usage notes**

If firewall protection is enabled, you need to create a firewall rule that allows the OpenVPN application traffic to traverse the firewall. OpenVPN is a pre-defined application with destination port number 1194. You can use the show application detail command to see the application details. If you specify a UDP number that is different to the default port number, you need to create an application with the same specified UDP port number for OpenVPN, and then create a firewall rule to allow the application to traverse the firewall. For more information about firewall rules, see the rule (firewall) command.

**Examples**

To configure tunnel tunnel5 to receive incoming tunnel connections on UDP port 4567, use the commands:

```
awplus(config)# interface tunnel5
awplus(config-if)# tunnel openvpn port 4567
```

To remove the specified UDP port for tunnel tunnel5 and set the UDP port to its default value, use the commands:

```
awplus# configure terminal
awplus(config)# interface tunnel5
awplus(config-if)# no tunnel openvpn port
```

**Command changes**

Version 5.5.0-2.1: command added to AR1050V

# tunnel openvpn tagging

**Overview**

This command configures an OpenVPN tunnel to add an 802.1Q tag (a VLAN ID) to traffic received over the tunnel. VLAN ID (VID) is a VLAN identifier that is used to determine which VLAN the traffic belongs to. The VID is determined from information received from the RADIUS server during the authentication process. If no VID information is received from the RADIUS server, the value specified in this command is used.

Use the **no** variant of this command to remove the VID over the tunnel.

Note that you can add an 802.1Q tag in the TAP mode only.

**Syntax**

```
tunnel openvpn tagging <1-4094>
no tunnel openvpn tagging
```

| Parameter | Description |
|---|---|
| *<1-4094>* | VLAN ID from 1 through 4094 |

**Mode**

Interface Configuration

**Examples**

To add an 802.1Q tag of 1 to packets received over the tunnel named tunnel5, use the commands:

```
awplus# configure terminal
awplus(config)# interface tunnel5
awplus(config-if)# tunnel openvpn tagging 1
```

To remove the 802.1Q tag for the tunnel named tunnel5, use the commands:

```
awplus# configure terminal
awplus(config)# interface tunnel5
awplus(config-if)# no tunnel openvpn tagging
```

**Command changes**

Version 5.5.0-2.1: command added to AR1050V

# tunnel security-reprocessing

**Overview**

Use this command to enable stream security reprocessing on all tunnel interfaces.

Use the **no** variant of this command to disable security reprocessing on all tunnel interfaces.

Note that tunnel security reprocessing increases the load on your device and reduces throughput. This is because traffic is processed twice through the DPI engine. Therefore, it should only be enabled if your solution requires it.

**Syntax**

```
tunnel security-reprocessing
no tunnel security-reprocessing
```

**Default**

Security reprocessing is disabled by default.

**Mode**

Global Configuration

**Usage notes**

Use this command when you need to reinspect the traffic in a tunnel terminating on the device using stream UTM features after tunnel headers and encryption have been removed. For a configuration example using this command, see the Internet Protocol Security (IPsec) Feature Overview and_Configuration Guide.

**Example**

To enable security reprocessing, use the commands:

```
awplus# configure terminal
awplus(config)# tunnel security-reprocessing
```

To disable security reprocessing, use the commands:

```
awplus# configure terminal
awplus(config)# no tunnel security-reprocessing
```

**Related commands**

show interface tunnel (GRE)

show interface tunnel (IPsec)

show interface tunnel (L2TPv3)

show interface tunnel (OpenVPN)

**Command changes**

Version 5.4.8-0.2: command added

# 77 L2TPv2 PPP Commands

## Introduction

This chapter provides an alphabetical reference of commands used to configure L2TPv2 tunnels.

For introductory information about tunneling of PPP over L2TPv2 in AlliedWare Plus, including overview and configuration information, see the L2TPv2 Feature Overview and Configuration Guide

**Command List**


- "debug l2tp" on page 3566
- "destination" on page 3567
- "encapsulation ppp" on page 3568
- "ip-version" on page 3570
- "l2tp tunnel" on page 3571
- "l2tp unmanaged port" on page 3573
- "l2tp-profile" on page 3574
- "local-subaddress" on page 3575
- "protection ipsec" on page 3576
- "protection local-name" on page 3577
- "protection profile" on page 3579
- "protection remote-name" on page 3580
- "remote-subaddress" on page 3582
- "shared-secret" on page 3583
- "show debugging l2tp" on page 3584
- "show l2tp session" on page 3585
- "show l2tp tunnel" on page 3587
- "show l2tp tunnel config-check" on page 3591

- "show running-config l2tp-profile" on page 3593
- "show running-config l2tp-tunnel" on page 3594
- "source" on page 3595
- "version" on page 3596

# debug l2tp

**Overview** Use this command to enable debugging of L2TPv2 tunnels.

Use the **no** variant of this command to disable debugging of L2TPv2 tunnels.

**Syntax**

```
debug l2tp
no debug l2tp
undebug l2tp
```

**Default** Debugging of L2TPv2 tunnels is disabled by default.

**Mode** Privileged Exec

**Example** To enable debugging for L2TPv2 tunnels, use the commands:

```
awplus# debug l2tp
awplus# terminal monitor
% Warning: Console logging enabled
```

To disable debugging of L2TPv2 tunnels, use the command:

```
awplus# no debug l2tp
```

or the command:

```
awplus# undebug l2tp
```

**Related commands** debug pppoe-ac

show debugging l2tp

# destination

**Overview** Use this command to set the destination of an L2TP tunnel.

Use the **no** variant of this command to remove the destination from the L2TP tunnel.

**Syntax**

```
destination [<ipv4-addr>|<ipv6-addr>|<domain-name>]
no destination
```

| Parameter | Description |
|---|---|
| *<ipv4-addr>* | The destination of the L2TP tunnel as an IPv4 address. |
| *<ipv6-addr>* | The destination of the L2TP tunnel as an IPv6 address. |
| *<domain-name>* | The destination of the L2TP tunnel as a fully-qualified domain name. |

**Default** No destination is set by default.

**Mode** L2TP Tunnel Configuration

**Example** To set the destination IP address for tunnel1 to 10.1.1.1, use the commands:

```
awplus# configure terminal
awplus(config)# l2tp tunnel tunnel1
awplus(config-l2tp-tunnel)# destination 10.1.1.1
```

To remove the destination IP address from tunnel1, use the commands:

```
awplus# configure terminal
awplus(config)# l2tp tunnel tunnel1
awplus(config-l2tp-tunnel)# no destination
```

**Related commands**

encapsulation ppp

ip-version

l2tp tunnel

show l2tp tunnel config-check

show running-config l2tp-tunnel

source

version

# encapsulation ppp

**Overview** Use this command to enable PPP encapsulation and create one or more PPP interfaces over Ethernet, a cellular interface, or an L2TPv2 managed VPN.

Use the **no** variant of this command to disable PPP encapsulation and remove the specified PPP interface.

**Syntax**

```
encapsulation ppp <index>
no encapsulation ppp <index>
```

| Parameter | Description |
|---|---|
| *<index>* | The PPP interface index number in the range from 0 to 255. |

**Default** No PPP encapsulation or interfaces are configured by default.

**Mode** Interface Configuration mode for an Ethernet interface (e.g. **interface eth1**), or an Ethernet sub-interface (e.g. **interface eth1.1**), or a cellular interface (e.g. **interface cellular0**).

L2TP Tunnel Configuration mode for an L2TP tunnel (e.g. **l2tp tunnel tunnel0**).

**Examples** To configure a PPP interface with index 0 for Ethernet interface eth1, use the commands:

```
awplus# configure terminal
awplus(config)# interface eth1
awplus(config-if)# encapsulation ppp 0
```

To shut down the ppp0 interface and remove it from Ethernet interface eth1, use the commands:

```
awplus# configure terminal
awplus(config)# interface ppp0
awplus(config-if)# shutdown
awplus(config-if)# interface eth1
awplus(config-if)# no encapsulation ppp 0
```

To set the L2TP tunnel tunnel1 to encapsulate the PPP interface with index 1, use the commands:

```
awplus# configure terminal
awplus(config)# l2tp tunnel tunnel1
awplus(config-l2tp-tunnel)# encapsulation ppp 1
```

To remove the PPP interface with index 1 from L2TP tunnel tunnel1, use the commands:

```
awplus# configure terminal
awplus(config)# l2tp tunnel tunnel1
awplus(config-l2tp-tunnel)# no encapsulation ppp 1
```

**Related commands**

l2tp tunnel

ppp service-name (PPPoE)

show interface (PPP)

# ip-version

**Overview** Use this command to set the IP version for the L2TP tunnel.

The IP version must be set to the same value at both ends of the tunnel.

**Syntax**

```
ip-version [4|6]
```

| Parameter | Description |
|---|---|
| 4 | IPv4 |
| 6 | IPv6 |

**Default** The IP version is set to IPv4 by default.

**Mode** L2TP Tunnel Configuration

**Example** To set the IP version for tunnel1 to IPv6, use the commands:

```
awplus# configure terminal
awplus(config)# l2tp tunnel tunnel1
awplus(config-l2tp-tunnel)# ip-version 6
```

To set the IP version for tunnel1 to the default (IPv4), use the commands:

```
awplus# configure terminal
awplus(config)# l2tp tunnel tunnel1
awplus(config-l2tp-tunnel)# ip-version 4
```

**Related commands**

encapsulation ppp

ip-version

l2tp tunnel

show running-config l2tp-tunnel

show l2tp tunnel config-check

source

version

# l2tp tunnel

**Overview** Use this command to create a named L2TP tunnel, and to enter L2TP Tunnel Configuration mode to configure it.

Use the **no** variant of this command to remove the named tunnel and all of its configuration.

**Syntax**

```
l2tp tunnel <tunnel-name>
no l2tp tunnel <tunnel-name>
```

| Parameter | Description |
|---|---|
| *<tunnel-name>* | The name of the tunnel to create, change or delete. |

**Default** No L2TP tunnel is configured by default.

**Mode** Global Configuration

**Example** To create and begin configuring a new L2TP tunnel named 'tunnel1', use the commands:

```
awplus# configure terminal
awplus(config)# l2tp tunnel tunnel1
awplus(config-l2tp-tunnel)#
```

To remove the tunnel 'tunnel1' and its configuration, use the commands:

```
awplus# configure terminal
awplus(config)# no l2tp tunnel tunnel1
```

**Related commands**

destination

encapsulation ppp

ip-version

local-subaddress

protection ipsec

protection local-name

protection profile

protection remote-name

remote-subaddress

shared-secret

show l2tp session

show l2tp tunnel

show l2tp tunnel config-check

show running-config l2tp-tunnel

source

version

# l2tp unmanaged port

**Overview**

Use this command to set the UDP port for an (IPv4 and IPv6) unmanaged L2TP tunnel (L2TPv3 Ethernet Pseudowires).

This command can only change the UDP port when there is no unmanaged L2TP tunnel (L2TPv3 Ethernet Pseudowires) configured.

Use the **no** variant of this command to reset the UDP port to the default (1701).

**Syntax**

```
l2tp unmanaged port [<1-65535>]
no l2tp unmanaged port
```

| Parameter | Description |
|---|---|
| *<1-65535>* | The number of the UDP port to use for an unmanaged L2TP tunnel (L2TPv3 Ethernet Pseudowires). |

**Default**

The UDP port is 1701 by default.

**Mode**

Global Configuration

**Usage notes**

The default UDP port for both unmanaged and managed L2TP tunnels is 1701. If both kinds of tunnel will be configured, the UDP port for the unmanaged tunnel must be changed to a different port by using the **l2tp unmanaged port** command.

Be aware of potential clashes with other UDP port users. Unless it is likely to be used for other purposes, we recommend configuring UDP port 1702 as a suitable alternative.

**Example**

To set the UDP port for an L2TP unmanaged tunnel (L2TPv3 Ethernet Pseudowires) to 1702, use the following commands:

```
awplus# configure terminal
awplus(config)# l2tp unmanaged port 1702
```

**Related commands**

tunnel mode l2tp v3

show running-config

# l2tp-profile

**Overview**

Use this command to create an L2TP profile and to enter the L2TP Profile Configuration mode.

Use the **no** variant of this command to remove the L2TP profile and all its configuration.

**Syntax**

```
l2tp-profile <name>
no l2tp-profile <name>
```

| Parameter | Description |
|---|---|
| *<name>* | The name of the L2TP profile being created or configured. |

**Default**

No L2TP profile is configured by default. This command is not configured by default.

**Mode**

Global Configuration

**Example**

To create a L2TP profile named "public", use the commands:

```
awplus# configure terminal
awplus(config)# l2tp-profile public
awplus(config-l2tp-profile)#
```

To remove all configuration of this L2TP profile, use the commands:

```
awplus# configure terminal
awplus(config)# no l2tp-profile public
```

**Related commands**

l2tp profile

pppoe-ac

shared-secret

show running-config l2tp-profile

version

# local-subaddress

**Overview** Use this command to set the local sub-address for L2TPv2 tunnel authentication.

Use the **no** variant of this command to remove the configured local sub-address.

**Syntax**

```
local-subaddress [<sub-address>]
no local-subaddress
```

| Parameter | Description |
|---|---|
| *<sub-address>* | The local sub-address for the tunnel. |

**Default** The local sub-address is not set by default; by default, the received L2TPv2 sub-address AVP will not be checked before establishing the tunnel.

**Mode** L2TP Tunnel Configuration

**Usage notes** If a local sub-address is set, this is checked against incoming the sub-address AVP as a requirement for tunnel establishment. The received sub-address AVP content must match the configured local sub-address.

**Example** To set the local-sub address of tunnel1 to 'office1', use the commands:

```
awplus# configure terminal
awplus(config)# l2tp tunnel tunnel1
awplus(config-l2tp-tunnel)# local-subaddress office1
```

To remove the local sub-address configuration from tunnel1, use the commands:

```
awplus# configure terminal
awplus(config)# l2tp tunnel tunnel1
awplus(config-l2tp-tunnel)# no local-subaddress
```

**Related commands**

l2tp tunnel

remote-subaddress

show l2tp tunnel config-check

show running-config l2tp-tunnel

# protection ipsec

**Overview** Use this command to enable IPsec protection on the L2TP tunnel.

Use the **no** variant of this command to disable IPsec on the tunnel.

**Syntax**

```
protection ipsec
no protection ipsec
```

**Default** IPsec protection is disabled by default.

**Mode** L2TP Tunnel Configuration

**Example** To protect tunnel1 with IPsec, use the commands:

```
awplus# configure terminal
awplus(config)# l2tp tunnel tunnel1
awplus(config-l2tp-tunnel)# protection ipsec
```

To disable IPsec protection for tunnel1, use the commands:

```
awplus# configure terminal
awplus(config)# l2tp tunnel tunnel1
awplus(config-l2tp-tunnel)# no protection ipsec
```

**Related commands**

l2tp tunnel

protection ipsec

protection local-name

protection profile

protection remote-name

show l2tp tunnel config-check

show running-config l2tp-tunnel

# protection local-name

**Overview**

Use this command to set the IPsec local name for the L2TP tunnel. This is the local identifier for IKE.

Use the **no** variant of this command to reset the local name to the default—the source IP address of the L2TP tunnel.

**Syntax**

```
protection local-name [<ipsec-local-name>]
no protection local-name
```

| Parameter | Description |
|---|---|
| *<ipsec-local-name>* | The IPsec local name for the tunnel. |

**Default**

By default, the IPsec local name is set to the source IP address of the L2TP tunnel.

**Mode**

L2TP Tunnel Configuration

**Usage notes**

If no local name is configured with this command, the source IP address of the tunnel is used. If a local name is configured with this command, the **crypto isakmp key** command is required to configure a preshared authentication key using this local name as the hostname.

**Example**

To set the IPsec local name for tunnel1 to office1 and set the key to 'friend', use the commands:

```
awplus# configure terminal
awplus(config)# l2tp tunnel tunnel1
awplus(config-l2tp-tunnel)# protection ipsec
awplus(config-l2tp-tunnel)# protection local-name office1
awplus(config)# crypto isakmp key friend hostname office1
```

To remove the IPsec local name for tunnel1, use the commands:

```
awplus# configure terminal
awplus(config)# l2tp tunnel tunnel1
awplus(config-l2tp-tunnel)# no protection local-name
```

**Related commands**

crypto isakmp key

l2tp tunnel

protection ipsec

protection profile

protection remote-name

show l2tp tunnel config-check

## show running-config l2tp-tunnel

# protection profile

**Overview** Use this command to set the IPsec profile to use for this L2TP tunnel.

Use the **no** variant of this command to set it back to the default IPsec profile: the profile named 'default'.

**Syntax**

```
protection profile [<profile-name>]
no protection profile
```

| Parameter | Description |
|---|---|
| *<profile-name>* | The name of the IPsec profile to use. This is the profile created by the **crypto ipsec profile** command. |

**Default** The L2TP tunnel protection profile is set to the IPsec profile named 'default' by default.

**Mode** L2TP Tunnel Configuration

**Example** To set up tunnel1 with IPsec protection using IPsec profile 'profile1', use the commands:

```
awplus# configure terminal
awplus(config)# l2tp tunnel tunnel1
awplus(config-l2tp-tunnel)# protection ipsec
awplus(config-l2tp-tunnel)# protection profile profile1
```

To reset tunnel1 to use IPsec protection with IPsec profile 'default', use the commands:

```
awplus# configure terminal
awplus(config)# l2tp tunnel tunnel1
awplus(config-l2tp-tunnel)# no protection profile
```

**Related commands**

crypto ipsec profile

l2tp tunnel

protection ipsec

protection local-name

protection remote-name

show l2tp tunnel config-check

show running-config l2tp-tunnel

# protection remote-name

**Overview** Use this command to set the L2TP tunnel IPsec remote name. This is the remote identifier for IKE.

Use the **no** variant of this command to reset the remote name to the default—the destination IP address of the tunnel.

**Syntax**

```
protection remote-name [<ipsec-remote-name>]
no protection remote-name
```

| Parameter | Description |
|---|---|
| *<ipsec-remote-name>* | The IPsec remote name for the tunnel. |

**Default** By default, the IPsec remote name is set to the destination IP address of the tunnel.

**Mode** L2TP Tunnel Configuration

**Usage notes** In order to set the IPsec remote name for the tunnel and add a corresponding ISAKMP key for the tunnel, set the IPsec remote name with this command (**protection remote-name**) and set the key for this by using the **crypto isakmp key** command with this remote name as the hostname.

**Example** To set the IPsec remote name for tunnel1 to 'office2' and set the key to 'friend', use the commands:

```
awplus# configure terminal
awplus(config)# l2tp tunnel tunnel1
awplus(config-l2tp-tunnel)# protection ipsec
awplus(config-l2tp-tunnel)# protection remote-name office2
awplus(config)# crypto isakmp key friend hostname office2
```

To reset the IPsec remote name for tunnel1 to default (destination IP address of the tunnel), use the commands:

```
awplus# configure terminal
awplus(config)# l2tp tunnel tunnel1
awplus(config-l2tp-tunnel)# no protection remote-name
```

**Related commands**

crypto isakmp key

l2tp tunnel

protection ipsec

protection local-name

protection profile

show l2tp tunnel config-check

## show running-config l2tp-tunnel

# remote-subaddress

**Overview**

Use this command to set the remote sub-address for L2TPv2 tunnel authentication.

Use the **no** variant of this command to remove the sub-address from the tunnel configuration.

**Syntax**

```
remote-subaddress [<sub-address>]
no remote-subaddress
```

| Parameter | Description |
|---|---|
| *<sub-address>* | The remote sub-address for the tunnel. |

**Default**

The remote sub-address is not set by default; the outgoing L2TP sub-address AVP for the tunnel will not be populated.

**Mode**

L2TP Tunnel Configuration

**Usage notes**

If the L2TP peer is also an AR-Series firewall, the remote-subaddress must match the local sub-address configured at the other end of the tunnel.

If a remote sub-address is configured for the tunnel, this value is placed in the outgoing sub-address AVP. The other tunnel end point can check this value against its configured local sub-address for the tunnel before establishing the tunnel.

**Example**

To set the remote sub-address of tunnel1 to 'office1', use the commands:

```
awplus# configure terminal
awplus(config)# l2tp tunnel tunnel1
awplus(config-l2tp-tunnel)# remote-subaddress office1
```

To remove the remote sub-address configuration from tunnel1, use the commands:

```
awplus# configure terminal
awplus(config)# l2tp tunnel tunnel1
awplus(config-l2tp-tunnel)# no remote-subaddress
```

**Related commands**

l2tp tunnel

local-subaddress

show l2tp tunnel config-check

show running-config l2tp-tunnel

# shared-secret

**Overview** Use this command to set the secret password that is shared with L2TP tunnel peers.

Use the **no** variant of this command to remove the shared secret.

**Syntax**

```
shared-secret <secret>
no shared-secret
```

| Parameter | Description |
|---|---|
| *<secret>* | The password shared with the tunnel peer. |

**Default** No shared secret is configured by default.

**Mode** L2TP Profile Configuration and L2TP Tunnel Configuration

**Example** To set tunnel secret to "my_password" for tunnel profile "public", use the commands:

```
awplus# configure terminal
awplus(config)# l2tp-profile public
awplus(config-l2tp-profile)# shared-secret my_password
```

To set tunnel secret to "my_password" for tunnel "tunnelone", use the commands:

```
awplus# configure terminal
awplus(config)# l2tp tunnel tunnelone
awplus(config-l2tp-tunnel)# shared-secret my_password
```

To remove the tunnel secret for the tunnel profile, use the commands:

```
awplus# configure terminal
awplus(config)# l2tp-profile public
awplus(config-l2tp-profile)# no shared-secret
```

To remove the tunnel secret for the tunnel ‘tunnelone’, use the commands:

```
awplus# configure terminal
awplus(config)# l2tp tunnel tunnelone
awplus(config-l2tp-tunnel)# no shared-secret
```

**Related commands**

l2tp tunnel

l2tp-profile

show running-config l2tp-profile

version

# show debugging l2tp

**Overview** Use this command to see what debugging is turned on for L2TP tunnels.

**Syntax**

```
show debugging l2tp
```

**Mode** Privileged Exec

**Example** To display whether debugging of L2TP tunnels is on or off, use the command:

```
awplus# show debugging l2tp
```

**Output** Figure 77-1: Example output from **show debugging l2tp**

```
awplus#show debugging l2tp
L2TP Tunnel Debugging is on
```

**Related commands** debug l2tp

# show l2tp session

**Overview** Use this command to display a summary or detailed list of information about L2TP sessions.

**Syntax**

```
show l2tp session [detail]
```

| Parameter | Description |
|---|---|
| `detail` | Displays more detailed information about L2TP sessions. |

**Mode** Privileged Exec

**Example** To display summary information about all L2TPv2 sessions, use the command:

```
awplus# show l2tp session
```

**Output** Figure 77-2: Example output from **show l2tp session**

```
awplus#show l2tp session

L2TP Session Information

-----------------------------------------------------------------
Session ID:                     59400
Tunnel ID:                      25351
State:                          RETRY
Type:                           LAIC
Created At:                     May 31 20:03:04 2016
Interface Name:                 ppp1
Remote Session ID:              61156
Establish Timeout:              120
```

Table 77-1: Parameters in the output from **show l2tp session**

| Parameter | Description |
|---|---|
| `Session ID` | L2TP session ID. |
| `Tunnel ID` | The ID of the L2TP tunnel for this session. |

Table 77-1: Parameters in the output from **show l2tp session** (cont.)

| Parameter | Description |
|---|---|
| `State` | The current state of the L2TP session:<br>• idle—Idle<br>• wait-tunnel—Await tunnel<br>• wait-reply—Await reply<br>• wait-connect—Await connect<br>• wait-cs-answer—Await circuit switched answer<br>• established—Successful connection<br>• retry—Retrying connection |
| `Type` | The type of the L2TP session:<br>• LAIC—LAC incoming call<br>• LAOC—LAC outgoing call<br>• LNIC—LNS incoming call<br>• LNOC—LNS outgoing call<br>• UNSPEC—unspecified call type |
| `Created At` | The date and time when the session was created. |
| `Interface Name` | The name of the interface for this session. |
| `Remote Session ID` | The ID of the session on the peer. |
| `Establish Timeout` | The time (in seconds) that a session will wait for the peer to complete the session setup message exchange. |

**Related commands**

l2tp tunnel

show l2tp tunnel

# show l2tp tunnel

**Overview** Use this command to display information about all the current L2TP tunnels.

**Syntax** `show l2tp tunnel [detail]`

| Parameter | Description |
|---|---|
| `detail` | Display additional detailed information about the tunnels. |

**Mode** Privileged Exec

**Usage notes** The output from this command depends on whether it won the tiebreaker and took the LAC role for the tunnel, or lost the tiebreaker and took the LNS role. In the latter case, a corresponding idle LAC tunnel is also displayed.

**Example** To display information about all L2TPv2 tunnels, use the command:

```
awplus# show l2tp tunnel
```

**Output** Figure 77-3: Example output from **show l2tp tunnel**

```
AWP-2#show l2tp tunnel

L2TP Tunnel Information

-------------------------------------------------------------------
Tunnel ID:                      25351
Tunnel Name:                    tunnel1
Local IP Address:               10.1.1.2
Remote IP Address:              10.1.1.1
State:                          ESTABLISHED
Created At:                     May 31 20:03:04 2016
Tunnel Mode:                    LAC
Remote Tunnel ID:               43832
Remote Host Name:               AWP-1
Remote Vendor Name:             Allied Telesis International
Local UDP Port:                 1701
Remote UDP Port:                1701
Hello Timeout:                  60
Retry Timeout:                  1
Idle Timeout:                   0
Establish Timeout:              60
```

Figure 77-4: Example output from **show l2tp tunnel detail**

```
awplus#show l2tp tunnel detail

L2TP Tunnel Information details

Tunnel 25351, from 10.1.1.2 to 10.1.1.1:-
  state: ESTABLISHED
  created at:  May 31 20:03:04 2016
  administrative name: 'tunnel1'
  created by admin: YES, tunnel mode: LAC, persist: YES
  peer tunnel id: 43832, host name: AWP-1
  UDP ports: local 1701, peer 1701
  authorization mode: CHALLENGE, hide AVPs: OFF
  digest type: md5
  tunnel secret: 'hello'
  session limit: 0, session count: 1
  tunnel profile: tunnel_profile_tunnel1, session profile:
    session_profile_tunnel1, peer profile: peer_profile_tunnel1
  hello timeout: 60, retry timeout: 1, idle timeout: 0
  establish timeout: 60
  persist pend timeout: 60
  rx window size: 10, tx window size: 10, max retries: 5
  use udp checksums: ON
  do pmtu discovery: OFF, mtu: 1460
  tos: inherit
  framing capability: SYNC ASYNC, bearer capability: DIGITAL
ANALOG
  use tiebreaker: ON
  tiebreaker: f6 5e 50 9c 02 99 45 83
  interopability flags: 128
  trace flags: PROTOCOL FSM API AVP FUNC XPRT DATA PPP SYSTEM
  Status:-
    peer vendor name: Allied Telesis International
    peer protocol version: 1.0, firmware 385
    peer framing capability: SYNC ASYNC
    peer bearer capability: DIGITAL ANALOG
    peer rx window size: 10
  Transport status:-
    ns/nr: 8/9, peer 8/8
    cwnd: 9, ssthresh: 10, congpkt_acc: 0
  Transport statistics:-
    out-of-sequence control/data discards: 0/0
    zlbs tx/txfail/rx: 6/0/5
    retransmits: 0, duplicate pkt discards: 0, data pkt discards:
      0
    hellos tx/txfail/rx: 1/0/5
    control rx packets: 14, rx bytes: 413
    control tx packets: 14, tx bytes: 542
    data rx packets: 4, rx bytes: 100, rx errors: 0
    data tx packets: 14, tx bytes: 512, tx errors: 0
  memory usage: 2111 bytes
  Events:-
    20:03:04 OPEN_REQ in state IDLE, new state WAITCTLREPLY
    20:03:04 SCCRP_ACCEPT in state WAITCTLREPLY, new state
ESTABLISHED
```

**Table 78:** Parameters in the output from **show l2tp tunnel** .

| Parameter | Description |
|---|---|
| `Tunnel ID` | The L2TP tunnel ID, (assigned automatically by the device. |
| `Tunnel Name` | The name of the L2TP tunnel as specified by the **l2tp tunnel** command. |
| `Local IP Address` | The IPv4 or IPv6 address of the tunnel on this device. This is either specified by the configuration if the device is in LAC mode, or assigned automatically by the device if it is in LNS mode.This may be specified directly by the **source** command, or derived from the interface set by that command. |
| `Remote IP Address` | The IPv4 or IPv6 address of the device at the remote end of the tunnel. This may be specified directly by the **destination** command, or derived from a domain name set by that command. |
| `State` | The current state of the tunnel:<br>• idle—Idle<br>• wait-ctl-reply—Await control reply<br>• wait-ctl-conn—Await connect reply<br>• established—Successful connection<br>• closing—Closing connection<br>• retry—Tie breaker lost, retrying connection |
| `Created at` | The date and time when the tunnel was created. |
| `Tunnel Mode` | The tunnel mode:<br>• LAC—L2TP Access Concentrator—the initiating end of the tunnel<br>• LNS—L2TP Network Server—the other end of the tunnel, authenticates the user and starts the PPP negotiation. |
| `Remote Tunnel ID` | The tunnel ID on the L2TP peer. |
| `Remote Host Name` | The host name of the L2TP peer. |
| `Remote Vendor Name` | The name of the vendor for the L2TP peer device. E.g. Allied Telesis International. |
| `Local UDP Port` | By default the local UDP port used for both L2TPv2 managed tunnels and L2TPv3 unmanaged tunnels (Ethernet Pseudowires) is 1701. If both are configured, change the UDP port for the unmanaged tunnel (**l2tp unmanaged port** command). |
| `Remote UDP Port` | The UPD port used by the remote device for this L2TP tunnel. |

**Table 78:** Parameters in the output from **show l2tp tunnel** . (cont.)

| Parameter | Description |
|---|---|
| `Hello Timeout` | The period between sending L2TP Hello messages (in seconds). |
| `Retry Timeout` | The delay (in seconds) before sending the first retry of unacknowledged control frames. |
| `Idle Timeout` | The time (in seconds) that a tunnel will remain after its last session has been torn down. |
| `Establish Timeout` | The time (in seconds) that a tunnel will wait for the peer to complete the tunnel setup message exchange. |

**Related commands**

l2tp tunnel

# show l2tp tunnel config-check

**Overview** Use this command to check the configuration of the specified L2TP tunnel or all L2TP tunnels for errors or missing required configuration.

**Syntax**

```
show l2tp tunnel [<tunnel-name>] config-check
```

| Parameter | Description |
|---|---|
| *<tunnel-name>* | The name of the L2TP tunnel to check. If not specified, all tunnels are checked. |

**Mode** Privileged Exec

**Usage notes** Only tunnels that have a complete configuration may appear in the **show l2tp tunnel** commands. For details of the configuration in the system, use the **show running-config l2tp-tunnel** command.

**Example** To check for missing L2TP tunnel configuration for the tunnel 'tunnel1', use the command:

```
awplus# show l2tp tunnel config-check
```

**Output** Figure 77-5: Example output from **show l2tp tunnel config-check**

```
awplus#show l2tp tunnel config-check

L2TP Tunnel tunnel1:
  Complete Configuration


L2TP Tunnel tunnel2:
  Incomplete Configuration
  Missing tunnel name or tunnel name mismatch
  Required: PPP interface
  Required: destination
  Source IP address required when IPSec protection on
```

Table 77-1: Parameters in the output from **show l2tp tunnel config-check**

| Parameter | Description |
|---|---|
| `Complete configuration` | The tunnel has a complete and valid configuration. |
| `Incomplete configuration` | There is configuration still required or invalid for this tunnel, as specified.<br>Examples of possible messages indicating missing or invalid configuration include:<br>• Missing tunnel name or tunnel name mismatch<br>• Required: PPP interface<br>• Required: destination<br>• Required: IP version<br>• Destination IP address does not match the configured IP version<br>• Source IP address does not match the configured IP version<br>• Source IP address required when IPSec protection on |

**Related commands**

show running-config l2tp-tunnel

# show running-config l2tp-profile

**Overview** Use this command to display the running configuration for L2Tp profiles.

**Syntax**

```
show running-config l2tp-profile
```

**Mode** Privileged Exec

**Example** To display the running configuration of L2TP profiles, use the command:

```
awplus# show running-config l2tp-profile
```

**Output** Figure 77-6: Example output from **show running-config l2tp-profile**

```
awplus#show running-config l2tp-profile

l2tp-profile public
 version 2
 secret "my_password"
```

**Related commands**

l2tp-profile

shared-secret

version

# show running-config l2tp-tunnel

**Overview** Use this command to display the current details for L2TP tunnel configuration.

**Syntax**

```
show running-config l2tp-tunnel
```

**Mode** Privileged Exec

**Example** To display the L2TP tunnel running configuration, use the command:

```
awplus# show running-config l2tp-tunnel
```

**Output** Figure 77-7: Example output from **show running-config l2tp-tunnel**

```
awplus#show running-config l2tp-tunnel
l2tp tunnel example
 version 2
 ip-version 4
 encapsulation ppp 0
 source 1.0.0.2
 destination 1.0.0.1
 local-subaddress TUNNEL2
 remote-subaddress TUNNEL1
!
```

**Related commands**

destination

encapsulation ppp

ip-version

l2tp tunnel

local-subaddress

protection ipsec

protection local-name

protection profile

protection remote-name

remote-subaddress

shared-secret

show l2tp tunnel config-check

source

version

# source

**Overview** Use this command to set the source address or interface for an L2TP tunnel.

Use the **no** variant of this command to remove the source address or interface from an L2TP tunnel.

**Syntax**

```
source [<interface-name>|<ipv4-addr>|<ipv6-addr>
no source
```

| Parameter | Description |
|---|---|
| *<interface-name>* | The name of the interface to be used as the tunnel starting point. |
| *<ipv4-addr>* | The IPv4 address to be used as the tunnel starting point. |
| *<ipv6-addr>* | The IPv6 address to be used as the tunnel starting point. |

**Default** If no source address or interface is configured, the source address used will be calculated based on the route to the tunnel destination.

**Mode** L2TP Tunnel Configuration

**Example** To configure IP address 10.1.1.2 as the source address for the tunnel named 'tunnel1', use the commands:

```
awplus# configure terminal
awplus(config)# l2tp tunnel tunnel1
awplus(config-l2tp-tunnel)# source 10.1.1.2
```

To remove the configured source address from 'tunnel1', so that it uses the default source, use the commands:

```
awplus# configure terminal
awplus(config)# l2tp tunnel tunnel1
awplus(config-l2tp-tunnel)# no source
```

**Related commands**

destination

l2tp tunnel

show l2tp tunnel

# version

**Overview** Use this command to specify the protocol version of a L2TP tunnel.

**Syntax** `version [<version>]`

| Parameter | Description |
|---|---|
| *<version>* | The protocol version of the L2TP tunnel. Version 2 is supported. |

**Default** The L2TP version is 2 by default.

**Mode** L2TP Profile Configuration and L2TP Tunnel Configuration

**Example** To use L2TPv2 for L2TP tunnel profile 'public', use the commands:

```
awplus# configure terminal
awplus(config)# l2tp-profile public
awplus(config-l2tp-profile)# version 2
```

To use L2TPv2 for L2TP tunnel 'tunnelone', use the commands:

```
awplus# configure terminal
awplus(config)# l2tp tunnel tunnelone
awplus(config-l2tp-tunnel)# version 2
```

**Related commands** l2tp tunnel

l2tp-profile

shared-secret

show running-config l2tp-profile

# 78 L2TPv3 Ethernet Pseudowire Commands

## Introduction

**Overview**

This chapter provides an alphabetical reference of commands used to configure L2TPv3 Ethernet pseudowires.

For introductory information about L2TPV3 in AlliedWare Plus, including overview and configuration information, see the L2TPv3 Ethernet Pseudowire Feature Overview and Configuration Guide.

**Command List**


- "interface tunnel (L2TPv3)" on page 3598
- "l2tp unmanaged port" on page 3599
- "show interface tunnel (L2TPv3)" on page 3600
- "tunnel destination (L2TPv3)" on page 3601
- "tunnel df" on page 3603
- "tunnel local id" on page 3604
- "tunnel mode l2tp v3" on page 3605
- "tunnel protection ipsec" on page 3606
- "tunnel remote id" on page 3607
- "tunnel security-reprocessing" on page 3608
- "tunnel source (L2TPv3)" on page 3609

# interface tunnel (L2TPv3)

**Overview**

Use this command to create a tunnel interface or to enter Interface mode to configure an existing tunnel. Tunnel interfaces are identified by an index identifier that is an integer in the range from 0 through 65535.

Use the **no** variant of this command to remove a previously created tunnel interface.

**Syntax**

```
interface tunnel<0-65535>
no interface tunnel<tunnel-index>
```

| Parameter | Description |
|---|---|
| *<0-65535>* | Specify a tunnel interface index identifier in the range from 0 through 65535. |

**Default**

Tunnel interfaces do not exist.

**Mode**

Global Configuration

**Usage notes**

After you have created the tunnel interface, use the **tunnel mode** command to enable the tunnel.

**Examples**

To configure a tunnel interface with index 30 and enable L2TPv3 mode, use the commands:

```
awplus# configure terminal
awplus(config)# interface tunnel30
awplus(config-if)# tunnel mode l2tp v3
```

To remove the tunnel interface tunnel30, use the commands:

```
awplus# configure terminal
awplus(config)# no interface tunnel30
```

**Related commands**

show interface tunnel (L2TPv3)

tunnel mode l2tp v3

**Command changes**

Version 5.4.7-2.1: increased range for **tunnel** index identifiers.

# l2tp unmanaged port

**Overview**

Use this command to set the UDP port for an (IPv4 and IPv6) unmanaged L2TP tunnel (L2TPv3 Ethernet Pseudowires).

This command can only change the UDP port when there is no unmanaged L2TP tunnel (L2TPv3 Ethernet Pseudowires) configured.

Use the **no** variant of this command to reset the UDP port to the default (1701).

**Syntax**

```
l2tp unmanaged port [<1-65535>]
no l2tp unmanaged port
```

| Parameter | Description |
|---|---|
| *<1-65535>* | The number of the UDP port to use for an unmanaged L2TP tunnel (L2TPv3 Ethernet Pseudowires). |

**Default**

The UDP port is 1701 by default.

**Mode**

Global Configuration

**Usage notes**

The default UDP port for both unmanaged and managed L2TP tunnels is 1701. If both kinds of tunnel will be configured, the UDP port for the unmanaged tunnel must be changed to a different port by using the **l2tp unmanaged port** command.

Be aware of potential clashes with other UDP port users. Unless it is likely to be used for other purposes, we recommend configuring UDP port 1702 as a suitable alternative.

**Example**

To set the UDP port for an L2TP unmanaged tunnel (L2TPv3 Ethernet Pseudowires) to 1702, use the following commands:

```
awplus# configure terminal
awplus(config)# l2tp unmanaged port 1702
```

**Related commands**

tunnel mode l2tp v3

show running-config

# show interface tunnel (L2TPv3)

**Overview** Use this command to display status information of a tunnel.

**Syntax**

```
show interface tunnel<0-65535>
```

| Parameter | Description |
|---|---|
| *<0-65535>* | Specify a tunnel index in the range from 0 through 65535. |

**Mode** Privileged Exec

**Examples** To display status information for L2TPv3 tunnel tunnel20, use the command.

```
awplus#show interface tunnel20
```

**Output** Figure 78-1: Example output from **show tunnel interface** on the console.

```
awplus#show interface tunnel20
Interface tunnel20
 Link is UP, administrative state is UP
 Hardware is Tunnel
 IPv4 address 192.168.10.1/24 broadcast 192.168.10.255
 IPv6 address 2001:db8:10::1/64
 IPv6 address fe80::5054:d4ff:fe84:d1aa/64
 index 16795714 metric 1 mtu 1480
 arp ageing timeout 300
 <UP,BROADCAST,RUNNING,MULTICAST>
 SNMP link-status traps: Disabled
 Tunnel source 192.168.1.1, destination 192.168.1.2
 Tunnel name local 192.168.1.1, remote 192.168.1.2
 Tunnel ID local 66, remote 77
 Tunnel protocol/transport l2tp v3, key disabled, sequencing
disabled
 Tunnel TTL inherit
 Checksumming of packets disabled, path MTU discovery disabled
 input packets 0, bytes 0, dropped 0, multicast packets 0
 output packets 5, bytes 366, multicast packets 0 broadcast
packets 0
 Time since last state change: 0 days 00:00:24
```

**Related commands** interface tunnel (L2TPv3)

# tunnel destination (L2TPv3)

**Overview** Use this command to specify a tunnel destination for the remote end of the tunnel. Tunnel destination can be specified by using a destination network name or an IPv4 address.

Use the **no** variant of this command to remove a configured tunnel destination.

**Syntax**

```
tunnel destination {<ipv4-addr>|<destination-network-name>}
no tunnel destination
```

| Parameter | Description |
|---|---|
| *<ipv4-addr>* | Specify the tunnel destination IPv4 address in the dotted decimal format A.B.C.D.<br>The endpoints of the tunnel must be configured by mirroring IP addresses, that is, the tunnel source on one endpoint must be specified as the tunnel destination on the other endpoint. |
| *<destination-network-name>* | Destination network name.<br>If the destination network name cannot be resolved, then the L2TPv3 tunnel remains inactive. |

**Mode** Interface Configuration

**Examples** To configure an IPv4 tunnel destination by using an IPv4 address, use the commands:

```
awplus# configure terminal
awplus(config)# interface tunnel40
awplus(config-if)# tunnel mode l2tp v3
awplus(config-if)# tunnel destination 2.2.2.2
```

To configure an L2TPv3 tunnel destination by using a destination network name, use the commands:

```
awplus# configure terminal
awplus(config)# interface tunnel40
awplus(config-if)# tunnel mode l2tp v3
awplus(config-if)# tunnel destination
corporate_lan.example.com
```

To remove a tunnel destination, use the commands:

```
awplus# configure terminal
awplus(config)# interface tunnel40
awplus(config-if)# no tunnel destination
```

**Related commands**

interface tunnel (L2TPv3)

tunnel mode l2tp v3

tunnel source (L2TPv3)

# tunnel df

**Overview** Use this command to specify whether the DF (Don't Fragment) bit in the IP header should be set or not on outgoing packets from L2TPv3 tunnels.

Use the **no** variant of this command to return to the default setting.

**Syntax**

```
tunnel df {set|clear}
no tunnel df
```

| Parameter | Description |
|---|---|
| set | Set the DF bit in the outer header |
| clear | Clear the DF bit in the outer header |

**Default** The DF bit is **set** on all outgoing packets.

**Mode** Interface Configuration

**Usage notes** This command gives you the opportunity to clear the DF bit allowing packets greater than the MTU to be fragmented and transmitted via the L2TPv3 Ethernet pseudo-wire. This may be necessary if an L2TPv3 tunnel is connected to a bridge and MTU-exceeded messages cannot be sent back to clients.

***NOTE:*** *If fragmentation of larger packets occurs as a result of setting the tunnel Do Not Fragment bit to clear, this may slightly increase latency of the associated traffic flow traversing the VPN, due to the fragmentation and re-assembly that occurs.*

**Example** To specify the DF bit on the L2TPv3 tunnel (tunnel2), use the following commands:

```
awplus# configure terminal
awplus(config)# interface tunnel2
awplus(config-if)# tunnel mode l2tp v3
awplus(config-if)# tunnel df clear
```

To set the DF bit on the L2TPv3 tunnel (tunnel2) back to the default, use the following commands:

```
awplus# configure terminal
awplus(config)# interface tunnel2
awplus(config-if)# no tunnel df
```

**Related commands** tunnel mode l2tp v3

**Command changes** Version 5.4.9-1.1: command added

# tunnel local id

**Overview** This command specifies a tunnel local identifier sent to the peer to match.

Use the **no** variant of this command to remove the tunnel local ID.

**Syntax**

```
tunnel local id <1-2147483647>
no tunnel local id
```

| Parameter | Description |
|---|---|
| *<1-2147483647>* | Tunnel ID from 1 through 2147483647 |

**Default** No tunnel local ID is set.

**Mode** Interface Configuration

**Usage notes** The endpoints of the tunnel must be configured by mirroring tunnel IDs, that is, the tunnel local ID on one endpoint must be specified as the tunnel remote ID on the other endpoint.

The local session ID defaults to the tunnel local ID and the local session ID is not configurable. A session provides the data channel in L2TPv3. There is a single pseudowire per L2TP session.

**Examples** To specify a tunnel local ID, use the commands:

```
awplus#configure terminal
awplus(config)#interface tunnel20
awplus(config-if)#tunnel mode l2tp v3
awplus(config-if)#tunnel local id 22
```

To remove the tunnel local ID, use the commands:

```
awplus#configure terminal
awplus(config)#interface tunnel20
awplus(config-if)#no tunnel local id
```

**Related commands** tunnel remote id

**Validation Commands** show interface tunnel (L2TPv3)

# tunnel mode l2tp v3

**Overview**

Use this command to configure the encapsulation tunneling mode.

Use the **no** variant of this command to remove an established tunnel.

**Syntax**

```
tunnel mode l2tp v3 [ipv6]
no tunnel mode
```

| Parameter | Description |
|---|---|
| ipv6 | Specify IPv6 as the delivery protocol. |

**Default**

Virtual tunnel interfaces have no mode set by default. If you specify a mode of **l2tp v3**, the delivery protocol is IPv4 unless you specify IPv6.

**Mode**

Interface Configuration

**Usage notes**

A tunnel will not become operational until it is configured with this command.

**Examples**

To configure L2TPv3 as the encapsulation tunneling mode for tunnel20, use the commands:

```
awplus#configure terminal
awplus(config)#interface tunnel20
awplus(config-if)#tunnel mode l2tp v3
```

To remove the established tunnel20, use the commands:

```
awplus#configure terminal
awplus(config)#interface tunnel20
awlus(config-if)#no tunnel mode
```

**Related commands**

interface tunnel (L2TPv3)

show interface tunnel (L2TPv3)

tunnel df

# tunnel protection ipsec

**Overview**

Use this command to optionally enable IPsec protection for packets encapsulated by this tunnel.

Use the **no** variant of this command to disable IPsec protection.

**Syntax**

```
tunnel protection ipsec [profile <ipsec-profile>]
no tunnel protection ipsec
```

| Parameter | Description |
|---|---|
| *<ipsec-profile>* | The name of an optional custom IPsec profile (crypto ipsec profile command) to use to protect this tunnel. |

**Default**

IPsec protection for packets encapsulated by tunnel is disabled.

**Mode**

Interface Configuration

**Usage notes**

You also need to configure a pre-shared key in conjunction with this command. See the crypto isakmp key command for more information about configuring the pre-shared key.

**Examples**

To enable IPsec protection for packets encapsulated by tunnel114, use the commands:

```
awplus#configure terminal
awplus(config)#interface tunnel114
awplus(config-if)#tunnel protection ipsec
```

To disable IPsec protection for packets encapsulated by tunnel114, use the commands:

```
awplus#configure terminal
awplus(config)#interface tunnel114
awplus(config-if)#no tunnel protection ipsec
```

**Related commands**

crypto ipsec profile

crypto isakmp key

show isakmp key (IPsec)

# tunnel remote id

**Overview** This command specifies a tunnel remote identifier sent to the peer for match.

Use the **no** variant of this command to remove the tunnel remote ID.

**Syntax**

```
tunnel remote id <1-2147483647>
no tunnel remote id
```

| Parameter | Description |
|---|---|
| *<1-2147483647>* | Tunnel ID from 1 through 2147483647 |

**Default** No tunnel remote ID is set.

**Mode** Interface Configuration

**Usage notes** The endpoints of the tunnel must be configured by mirroring tunnel IDs, that is, the tunnel remote ID on one endpoint must be specified as the tunnel local ID on the other endpoint.

The remote session ID defaults to the tunnel remote ID and the remote session ID is not configurable. A session provides the data channel in L2TPv3. There is a single pseudowire per L2TP session.

**Examples** To specify a tunnel remote ID, use the commands:

```
awplus#configure terminal
awplus(config)#interface tunnel20
awplus(config-if)#tunnel mode l2tp v3
awplus(config-if)#tunnel remote id 22
```

To remove the tunnel remote ID, use the commands:

```
awplus#configure terminal
awplus(config)#interface tunnel20
awplus(config-if)#no tunnel remote id
```

**Related commands** tunnel local id

**Validation Commands** show interface tunnel (L2TPv3)

# tunnel security-reprocessing

**Overview**

Use this command to enable stream security reprocessing on all tunnel interfaces.

Use the **no** variant of this command to disable security reprocessing on all tunnel interfaces.

Note that tunnel security reprocessing increases the load on your device and reduces throughput. This is because traffic is processed twice through the DPI engine. Therefore, it should only be enabled if your solution requires it.

**Syntax**

```
tunnel security-reprocessing
no tunnel security-reprocessing
```

**Default**

Security reprocessing is disabled by default.

**Mode**

Global Configuration

**Usage notes**

Use this command when you need to reinspect the traffic in a tunnel terminating on the device using stream UTM features after tunnel headers and encryption have been removed. For a configuration example using this command, see the Internet Protocol Security (IPsec) Feature Overview and_Configuration Guide.

**Example**

To enable security reprocessing, use the commands:

```
awplus# configure terminal
awplus(config)# tunnel security-reprocessing
```

To disable security reprocessing, use the commands:

```
awplus# configure terminal
awplus(config)# no tunnel security-reprocessing
```

**Related commands**

show interface tunnel (GRE)

show interface tunnel (IPsec)

show interface tunnel (L2TPv3)

show interface tunnel (OpenVPN)

**Command changes**

Version 5.4.8-0.2: command added

# tunnel source (L2TPv3)

**Overview** Use this command to specify a tunnel source for the tunnel interface. The tunnel source can be specified by using an interface name or an IPv4 address. The source address must be an existing IPv4 address configured for an interface.

Use the **no** variant of this command to remove a tunnel source for a tunnel interface.

**Syntax**

```
tunnel source {<ipv4-addr>|<interface-name>}
no tunnel source
```

| Parameter | Description |
|---|---|
| *<ipv4-addr>* | Specify the tunnel source IPv4 address for the tunnel interface in the dotted decimal format A.B.C.D.<br>The endpoints of the tunnel must be configured by mirroring IP addresses, that is, the tunnel source on one endpoint must be specified as the tunnel destination on the other endpoint. |
| *<interface-name>* | Available interface name. Any AlliedWare Plus interface type (eth, vlan, ppp, tunnel, lo and so on).<br>Using interface name can minimize the number of user-configured IP addresses and allow the tunnel source IP address to be dynamically issued via, for example, DHCP. |

**Mode** Interface Configuration

**Examples** To configure an L2TPv3 tunnel source IPv4 address, use the commands:

```
awplus# configure terminal
awplus# interface eth1
awplus(config-if)# ip address 1.1.1.1/24
awplus(config-if)# interface tunnel1
awplus(config-if)# tunnel mode l2tp v3
awplus(config-if)# tunnel source 1.1.1.1
```

To use an interface name as the tunnel source, use the commands:

```
awplus# configure terminal
awplus(config)# interface tunnel2
awplus(config-if)# tunnel mode l2tp v3
awplus(config-if)# tunnel source eth2
```

To remove a tunnel source, use the commands:

```
awplus# configure terminal
awplus(config)# interface tunnel1
awplus(config-if)# no tunnel source
```

**Related commands**

interface tunnel (L2TPv3)

tunnel destination (L2TPv3)

tunnel mode l2tp v3

# 79 Transitioning IPv4 to IPv6 Commands

## Introduction

**Overview**

This chapter provides an alphabetical reference of commands used to configure Light Weight 4 over 6 and MAP E.

Many ISPs have migrated from IPv4 to IPv6 networks. However, many customers are still using IPv4 facilities. IPv6 transition technologies, such as Light Weight 4 over 6 (LW4o6) and MAP-E, provide interoperability between IPv4 and IPv6 networks. This enables ISPs with IPv6 networks to provide Internet connectivity to customers with IPv4 facilities.

MAP-E provides a mechanism for mapping between an IPv4 prefix or IPv4 address or IPv4 shared address and an IPv6 address. It also uses the encapsulation mode described in RFC 2473 (IPv6 Tunneling) to transport IPv4 packets over an IPv6 network.

Dual-Stack Lite (DS-Lite) (RFC 6333) describes an architecture for transporting IPv4 packets over an IPv6 network. This chapter describes an extension to DS-Lite called **Lightweight 4over6**, which moves the Network Address and Port Translation (NAPT) function from the centralized DS-Lite tunnel concentrator to the tunnel client located in the Customer Premises Equipment (CPE).

This removes the requirement for a Carrier Grade NAT function in the tunnel concentrator and reduces the amount of centralized state that must be held to a per-subscriber level. In order to delegate the NAPT function and make IPv4 address sharing possible, port-restricted IPv4 addresses are allocated to the CPEs.

**Useful Terms**

- **Softwire**: A tunnel between two IPv6 end-points to carry IPv4 packets or two IPv4 end-points to carry IPV6 packets.
- **B4**: Softwire at the customer end that encapsulates native packets and tunnels them to a softwire concentrator (AFTR) at the service provider.
- **AFTR**: Softwire that decapsulates the packets received from a softwire B4 and sends them to their destination.

For more information, see the Transitioning IPv4 to IPv6 Feature Overview and Configuration Guide.

**Command List**


- "br-address (softwire)" on page 3613
- "mesh-mode" on page 3614
- "method (softwire)" on page 3615
- "rule (softwire)" on page 3616
- "show running-config softwire-configuration" on page 3618
- "show softwire-configuration" on page 3619
- "softwire-configuration" on page 3621
- "tunnel security-reprocessing" on page 3622
- "tunnel destination (DS-Lite)" on page 3623
- "tunnel mode ds-lite" on page 3624
- "tunnel mode lw4o6" on page 3625
- "tunnel mode map-e" on page 3626
- "tunnel softwire" on page 3627
- "upstream-interface" on page 3628

# br-address (softwire)

**Overview**

Use this command to specify the IPv6 address of the MAP-E Border Router. Note, before using this command you must configure the command **method (Softwire Configuration)** with the **static** parameter.

Use the **no** variant of this command to remove the MAP-E Border Router address configuration.

**Syntax**

```
br-address <ipv6-address>
no br-address
```

| Parameter | Description |
|---|---|
| *<ipv6-address>* | IPv6 address of MAP-E Border Router |

**Default**

Not set.

**Mode**

SoftWire Configuration

**Example**

To configure 'swconfig' to the softwire configuration MAP-E Border Router IPv6 address, use the following commands:

```
awplus# configure terminal
awplus(config)# softwire-configuration swconfig
awplus(config-softwire)# br-address 2001::1
```

To remove the MAP-E Border Router IPv6 address configuration for 'swconfig', use the following commands:

```
awplus# configure terminal
awplus(config)# softwire-configuration swconfig
awplus(config-softwire)# no br-address
```

**Related commands**

show softwire-configuration

**Command changes**

Version 5.4.9-0.1: command added

# mesh-mode

**Overview**

Use this command to enable mesh-mode. Mesh-mode enables softwire tunnels to work with devices that share the same IP address at the tunnel endpoint.

Use the **no** variant of this command to disable mesh-mode.

**Syntax**

```
mesh-mode
no mesh-mode
```

**Default**

No mesh-mode.

**Mode**

SoftWire Configuration

**Usage notes**

Softwire tunnels may require communication with endpoints sharing the same IP address. The CPU resource required to support this is significant, so this command enables this support.

**Example**

To configure a softwire named 'demo' to communicate with endpoints that share the same IP address, use the following commands:

```
awplus# configure terminal
awplus(config)# softwire-configuration demo
awplus(config-softwire)# mesh-mode
```

**Related commands**

show softwire-configuration

softwire-configuration

**Command changes**

Version 5.4.9-0.1: command added

# method (softwire)

**Overview**

Use this command to specify the configuration method (or source) for a softwire configuration. The configuration method can be either static or DHCP.

Use the **no** variant of this command to remove a configured method.

**Syntax**

```
method {static|dhcp}
no method
```

| Parameter | Description |
|---|---|
| static | Softwire configuration is statically configured |
| dhcp | Softwire configuration is acquired through DHCP |

**Default**

Not set.

**Mode**

SoftWire Configuration

**Example**

To set the 'swconfig' softwire configuration method to **static**, use the commands:

```
awplus# configure terminal
awplus(config)# softwire-configuration swconfig
awplus(config-softwire)# method static
```

To set the 'swconfig' softwire configuration method to **DHCP**, use the commands:

```
awplus# configure terminal
awplus(config)# softwire-configuration swconfig
awplus(config-softwire)# method dhcp
```

To remove the softwire configuration method from 'swconfig', use the commands:

```
awplus# configure terminal
awplus(config)# softwire-configuration swconfig
awplus(config-softwire)# no method
```

**Related commands**

show softwire-configuration

rule (softwire)

**Command changes**

Version 5.4.9-0.1: command added

# rule (softwire)

**Overview** Use this command to statically configure a MAP rule. Note, before using this command you must configure the command **method (Softwire Configuration)** with the **static** parameter.

You would normally obtain the values to use in this command from your ISP.

Use the **no** variant of this command to remove a MAP rule configuration.

**Syntax**

```
rule <0-65535> ipv4-prefix <ipv4-prefix> ipv6-prefix
<ipv6-prefix> psid-length <0-15> psid <psid-value> [offset
<0-16>] [forwarding]
```

```
rule <0-65535> ipv4-prefix <ipv4-prefix> ipv6-prefix
<ipv6-prefix> ea-length <0-48> [offset <0-16>] [forwarding]
```

```
no rule <0-65535>
```

| Parameter | Description |
|---|---|
| `rule <0-65535>` | Rule ID is an integer in the range <1-65535> |
| `ipv4-prefix <ipv4-prefix>` | IPv4 prefix (e.g. 192.0.2.0/24) |
| `ipv6-prefix <ipv6-prefix>` | IPv6 prefix (e.g. 2001:db8: :/32) |
| `ea-length <0-48>` | Embedded address length is an integer in the range <0-48>. |
| `psid-length <0-15>` | Port Set ID (PSID) length is an integer in the range <0-15>, the default length is 0. |
| `psid <psid-value>` | Port Set ID (PSID) value is either decimal <0-65535> or hexadecimal with a leading 0x. Different PSID values guarantee non-overlapping port sets. |
| `offset <0-16>` | Port Set ID (PSID) offset is an integer in the range <0-16>. |
| `forwarding` | Indicates if this rule is a Forwarding Mapping Rule (FMR). Otherwise, this is only used as a Basic Mapping Rule (BMR) |

**Default** Not set.

**Mode** SoftWire Configuration

**Example**

To configure a MAP rule 1 and MAP rule 2 in Softwire Configuration 'swconfig', use the following commands:

```
awplus# configure terminal
awplus(config)# softwire-configuration swconfig
awplus(config-softwire)# rule 1 ipv4-prefix 192.0.2.0/24
ipv6-prefix 2001:db8:1::/48 ea-length 16 forwarding
awplus(config-softwire)# rule 2 ipv4-prefix 192.0.2.23/32
ipv6-prefix 2001:db8:1:1781::/64 psid-length 8 psid 129
```

These two example rules above produce the same resulting IPv4 address and PSID if the IPv6 subnet on the upstream interface is 2001:db8:1:1781::/64.

To the remove rule 1 in Softwire Configuration 'swconfig', use the following commands:

```
awplus# configure terminal
awplus(config)# softwire-configuration swconfig
awplus(config-softwire)# no rule 1
```

**Related commands**

method (softwire)

show softwire-configuration

**Command changes**

Version 5.4.9-0.1: command added

# show running-config softwire-configuration

**Overview** Use this command to display the running configuration information for a softwire configuration.

**Syntax**

```
show running-config softwire-configuration
<softwire-config-name>
```

```
show running-config softwire-configuration
```

| Parameter | Description |
|---|---|
| *<softwire-config-name>* | The name assigned for the Softwire Configuration |

**Mode** Privileged Exec

**Example** To show the running configuration for **all** softwire configuration, use the following command:

```
awplus# show running-config softwire-configuration
```

To show the running configuration for softwire configuration 'swconfig1', use the following command:

```
awplus# show running-config softwire-configuration swconfig1
```

**Output** Figure 79-1: Example output from **show running-config softwire-configuration**

```
awplus#show running-config softwire-configuration
softwire-configuration swconfig1
 method static
 map-version rfc
 br-address 2001:db8:1234:5678::1
 rule 10 ipv4-prefix 192.168.1.0/24 ipv6-prefix 2001:db8:1000::/48 ea-length 16 forwarding
 rule 20 ipv4-prefix 192.168.2.0/24 ipv6-prefix 2001:db8:2000::/48 ea-length 16 forwarding
 rule 30 ipv4-prefix 192.168.3.0/24 ipv6-prefix 2001:db8:3000::/48 ea-length 16 forwarding
!
softwire-configuration swconfig2
 method dhcp
 upstream-interface eth1
!
```

**Related commands** softwire-configuration

**Command changes** Version 5.4.9-0.1: command added

# show softwire-configuration

**Overview** Use this command to show information about the configuration state of softwire configuration. You can show information for all softwire configurations or define a specific configuration for display.

**Syntax**

```
show softwire-configuration <softwire-config-name>
show softwire-configuration
```

| Parameter | Description |
|---|---|
| *<softwire-config-name>* | Name assigned to the Softwire Configuration |

**Mode** Privileged Exec

**Example** To show information about the configuration state of **all** softwire configuration, use the command:

```
awplus# show softwire-configuration
```

To show information about the configuration state of softwire configuration 'swconfig1', use the command:

```
awplus# show softwire-configuration swconfig1
```

**Output** Figure 79-2: Example output for a Static MAP-E softwire configuration

```
awplus#show softwire-configuration swconfig1

Softwire Configuration: swconfig1

 Configuration Source: static
 Upstream Interface: eth1
 MAP-E Version: rfc
 No LW4o6 Configuration

 Border Relay Device: 2001:db8::1
  Rule 0
   IPv4-prefix: 192.0.2.0/24
   IPv6-prefix: 2001:db8::/32
   Embedded address length: 16
   Forwarding: enabled
   PSID offset: default
   PSID length: default
   PSID: default (0x0)
```

Figure 79-3: Example output for LW4o6 (config method DHCP)

```
awplus#show softwire-configuration

Softwire Configuration: lw4o6

 Configuration Source: dhcp
 Upstream Interface: eth1
 MAP-E Version: rfc
 lwAFTR Address: 2001:0db8:acc3:0055:0000:0000:0000:0001
 lw4o6 Rule:
  IPv4-Address: 192.0.2.123
  IPv6-Prefix: 2001:0db8::/32
   PSID offset: 0
   PSID length: 9
   PSID: 346 (0x15a)

Border Relay Device: Not Set
```

**Related commands**

softwire-configuration

method (softwire)

br-address (softwire)

upstream-interface

rule (softwire)

**Command changes**

Version 5.4.9-0.1: command added

# softwire-configuration

**Overview**

Use this command to enter the Softwire Configuration mode. This mode allows you to configure softwire settings.

In computer networking, a softwire is a type of tunneling protocol that creates a virtual "wire" that transparently encapsulates another protocol. Softwires are used for various purposes, one of which is to carry IPv4 traffic over IPv6 and vice versa, in order to support IPv6 transition mechanisms.

Use the **no** variant of this command to remove a softwire configuration.

**Syntax**

```
softwire-configuration <softwire-config-name>
no softwire-configuration <softwire-config-name>
```

| Parameter | Description |
|---|---|
| *<softwire-config-name>* | The name assigned for this softwire configuration |

**Mode**

Global Configuration

**Example**

To configure softwire settings for 'softwire1', use the following commands:

```
awplus# configure terminal
awplus(config)# softwire-configuration softwire1
awplus(config-softwire)#
```

To remove softwire 'softwire1', MAP Rules configuration, use the following commands:

```
awplus# configure terminal
awplus(config)# no softwire-configuration softwire1
```

**Related commands**

show softwire-configuration

**Command changes**

Version 5.4.9-0.1: command added

# tunnel security-reprocessing

**Overview**

Use this command to enable stream security reprocessing on all tunnel interfaces.

Use the **no** variant of this command to disable security reprocessing on all tunnel interfaces.

Note that tunnel security reprocessing increases the load on your device and reduces throughput. This is because traffic is processed twice through the DPI engine. Therefore, it should only be enabled if your solution requires it.

**Syntax**

```
tunnel security-reprocessing
no tunnel security-reprocessing
```

**Default**

Security reprocessing is disabled by default.

**Mode**

Global Configuration

**Usage notes**

Use this command when you need to reinspect the traffic in a tunnel terminating on the device using stream UTM features after tunnel headers and encryption have been removed. For a configuration example using this command, see the Internet Protocol Security (IPsec) Feature Overview and_Configuration Guide.

**Example**

To enable security reprocessing, use the commands:

```
awplus# configure terminal
awplus(config)# tunnel security-reprocessing
```

To disable security reprocessing, use the commands:

```
awplus# configure terminal
awplus(config)# no tunnel security-reprocessing
```

**Related commands**

show interface tunnel (GRE)

show interface tunnel (IPsec)

show interface tunnel (L2TPv3)

show interface tunnel (OpenVPN)

**Command changes**

Version 5.4.8-0.2: command added

# tunnel destination (DS-Lite)

**Overview** Use this command to specify the tunnel destination for a DS-Lite tunnel.

Use the **no** variant of this command to remove a configured tunnel destination.

**Syntax**

```
tunnel destination dhcp interface <interface-name>
no tunnel destination
```

| Parameter | Description |
|---|---|
| *<interface-name>* | The interface which receives the DHCP reply. |

**Mode** Interface Configuration

**Example** To configure a DS-Lite tunnel destination, use the following commands:

```
awplus# configure terminal
awplus(config)# interface tunnel0
awplus(config-if)# tunnel mode ds-lite
awplus(config-if)# tunnel destination dhcp interface eth1
```

To remove the tunnel destination, use the following commands:

```
awplus# configure terminal
awplus(config)# interface tunnel0
awplus(config-if)# no tunnel mode destination
```

**Related commands** tunnel mode ds-lite

**Command changes** Version 5.4.9-0.1: command added

# tunnel mode ds-lite

**Overview**

Use this command to set the tunnel mode to DS-Lite for a tunnel interface.

Use the **no** variant of this command to remove the tunnel mode.

**Syntax**

```
tunnel mode ds-lite
no tunnel mode
```

**Default**

Not set.

**Mode**

Interface Configuration

**Example**

To configure the DS-Lite tunnel mode on interface 'tunnel0', use the following commands:

```
awplus# configure terminal
awplus(config)# interface tunnel0
awplus(config-if)# tunnel mode ds-lite
```

To remove the configured DS-Lite tunnel mode for 'tunnel0', use the following commands:

```
awplus# configure terminal
awplus(config)# interface tunnel0
awplus(config-if)# no tunnel mode
```

**Related commands**

tunnel mode (IPv6)

**Command changes**

Version 5.4.9-0.1: command added

# tunnel mode lw4o6

**Overview**

Use this command to set the tunnel mode to Light Weight 4over6 (lw4o6) for a tunnel interface.

Use the **no** variant of this command to remove an established lw406 tunnel.

**Syntax**

```
tunnel mode lw4o6
no tunnel mode
```

**Default**

Not set.

**Mode**

Interface Configuration

**Example**

To configure lw4o6 tunnel mode for tunnel6, use the following commands:

```
awplus# configure terminal
awplus(config)# interface tunnel6
awplus(config-if)# tunnel mode lw4o6
```

To removed the configured lw4o6 tunnel mode for tunnel6, use the following commands:

```
awplus# configure terminal
awplus(config)# interface tunnel6
awplus(config-if)# no tunnel mode
```

**Related commands**

tunnel mode (IPv6)

**Command changes**

Version 5.4.9-0.1: command added

# tunnel mode map-e

**Overview**

Use this command to set the tunnel mode to MAP-E for a tunnel interface.

Use the **no** variant of this command to remove the MAP-E mode from a tunnel interface.

**Syntax**

```
tunnel mode map-e
no tunnel mode
```

**Default**

Not set.

**Mode**

User Exec and Privileged Exec

**Example**

To configure the MAP-E tunnel mode on interface 'tunnel6', use the following commands:

```
awplus# configure terminal
awplus(config)# interface tunnel6
awplus(config-if)# tunnel mode map-e
```

To remove the configured MAP-E tunnel mode for 'tunnel6', use the following commands:

```
awplus# configure terminal
awplus(config)# interface tunnel6
awplus(config-if)# no tunnel mode
```

**Related commands**

show softwire-configuration

**Command changes**

Version 5.4.9-0.1: command added

# tunnel softwire

**Overview**

Use this command to configure the softwire configuration to use for a tunnel interface.

Note that **tunnel-mode map-e** or **tunnel mode lw4o6** must be configured in order for the command **tunnel softwire** to be valid.

Use the **no** variant of this command to remove a tunnel softwire configuration.

**Syntax**

```
tunnel softwire <softwire-config-name>
no tunnel softwire
```

| Parameter | Description |
|---|---|
| *<softwire-config-name>* | The softwire configuration used for a tunnel interface |

**Default**

Not set.

**Mode**

Interface Configuration

**Example**

To set the softwire configuration called 'swconfig' to an interface called 'tunnel6', use the following commands:

```
awplus# configure terminal
awplus(config)# interface tunnel6
awplus(config-if)# tunnel softwire swconfig
```

To remove the softwire configuration for interface 'tunnel6', use the following commands:

```
awplus# configure terminal
awplus(config)# interface tunnel6
awplus(config-if)# no tunnel softwire
```

**Related commands**

tunnel mode map-e

tunnel mode lw4o6

**Command changes**

Version 5.4.9-0.1: command added

# upstream-interface

**Overview** Use this command to assign a softwire configuration to an upstream interface configured with a globally scoped IPv6 address.

Use the **no** variant of this command to remove a configured upstream interface.

**Syntax**

```
upstream-interface <interface-name>
no upstream-interface
```

| Parameter | Description |
|---|---|
| *<interface-name>* | Name of the interface connected to upstream (e.g. eth1, br1, vlan1) |

**Default** Not set.

**Mode** SoftWire Configuration

**Example** To configure the softwire configuration ('swconfig') upstream-interface to eth1, use the following commands:

```
awplus# configure terminal
awplus(config)# softwire-configuration swconfig
awplus(config-softwire)# upstream-interface eth1
```

To remove the softwire configuration ('swconfig') upstream-interface configuration, use the following commands:

```
awplus# configure terminal
awplus(config)# softwire-configuration swconfig
awplus(config-softwire)# no upstream-interface
```

**Related commands** show softwire-configuration

**Command changes** Version 5.4.9-0.1: command added

# 80 IPv6 Tunneling Commands

## Introduction

**Overview** This chapter provides an alphabetical reference of commands used to configure IPv6 Tunneling.

For more information, see the IPv6 Tunneling Feature Overview and Configuration Guide.

**Command List**


- "interface tunnel (IPv6)" on page 3630
- "ip address (IP Addressing and Protocol)" on page 3631
- "ip tcp adjust-mss" on page 3633
- "ipv6 address" on page 3635
- "ipv6 tcp adjust-mss" on page 3637
- "mtu" on page 3639
- "show interface tunnel (IPv6)" on page 3641
- "tunnel destination (IPv6)" on page 3642
- "tunnel dscp" on page 3644
- "tunnel mode (IPv6)" on page 3645
- "tunnel source (IPv6)" on page 3646
- "tunnel ttl" on page 3648

# interface tunnel (IPv6)

**Overview**

Use this command to create a tunnel interface or to enter Interface mode to configure an existing tunnel. Tunnel interfaces are identified by an index identifier that is an integer in the range from 0 through 65535.

Use the **no** variant of this command to remove a previously created tunnel interface.

**Syntax**

```
interface tunnel<tunnel-index>
no interface tunnel<tunnel-index>
```

| Parameter | Description |
|---|---|
| *<tunnel-index>* | Specify a tunnel interface index identifier in the range from 0 through 65535. |

**Default**

Tunnel interfaces do not exist.

**Mode**

Global Configuration

**Usage notes**

After you have created the tunnel interface, use the **tunnel mode** command to enable the tunnel.

**Examples**

To configure a tunnel interface with index 30 and use IPv6 tunneling, use the commands:

```
awplus# configure terminal
awplus(config)# interface tunnel30
awplus(config-if)# tunnel mode ipv6
```

To remove the IPv6 tunnel interface tunnel30, use the commands:

```
awplus# configure terminal
awplus(config)# no interface tunnel30
```

**Command changes**

Version 5.4.8-2.1: command added

# ip address (IP Addressing and Protocol)

**Overview** This command sets a static IP address on an interface.

The **no** variant of this command removes the IP address from the interface.

You cannot remove the primary address when a secondary address is present.

**Syntax**

```
ip address <ip-addr/prefix-length> [secondary] [label <label>]
no ip address [<ip-addr/prefix-length>] [secondary]
```

| Parameter | Description |
|---|---|
| `<ip-addr/prefix-length>` | The IPv4 address and prefix length you are assigning to the interface. |
| `secondary` | Secondary IP address. |
| `label` | Adds a user-defined description of the secondary IP address. |
| `<label>` | A user-defined description of the secondary IP address. Valid characters are any printable character and spaces. |

**Mode** Interface Configuration for a VLAN interface, an Eth interface, an 802.1Q sub-interface, a local loopback interface, a PPP interface, a bridge, or a tunnel.

**Usage notes** To set the primary IP address on the interface, specify only **ip address** *<ip-addr/prefix-length>*. This overwrites any configured primary IP address. To add additional IP addresses on this interface, use the **secondary** parameter. You must configure a primary address on the interface before configuring a secondary address.

***NOTE:*** *Use **show running-config interface**, instead of **show ip interface brief**, when you need to view a secondary address configured on an interface. **show ip interface brief** will only show the primary address, not a secondary address for an interface.*

**Examples** To add the IP address 10.10.10.50/24 to the interface vlan2, use the following commands:

```
awplus# configure terminal
awplus(config)# interface vlan2
awplus(config-if)# ip address 10.10.10.50/24
```

To add the secondary IP address 10.10.11.50/24 to the same interface, use the following commands:

```
awplus# configure terminal
awplus(config)# interface vlan2
awplus(config-if)# ip address 10.10.11.50/24 secondary
```

To add the IP address 10.10.11.50/24 to the local loopback interface lo, use the following commands:

```
awplus# configure terminal
awplus(config)# interface lo
awplus(config-if)# ip address 10.10.11.50/24
```

To add the IP address 10.10.11.50/24 to the PPP interface ppp0, use the following commands:

```
awplus# configure terminal
awplus(config)# interface ppp0
awplus(config-if)# ip address 10.10.11.50/24
```

To add the IP address 10.10.11.50/24 to the tunnel tunnel0, use the following commands:

```
awplus# configure terminal
awplus(config)# interface tunnel0
awplus(config-if)# ip address 10.10.11.50/24
```

**Related commands**

interface (to configure)

show ip interface

show running-config interface

# ip tcp adjust-mss

**Overview** Use this command to set the Maximum Segment Size (MSS) size for an interface, where MSS is the maximum TCP data packet size that the interface can transmit before fragmentation.

Use the **no** variant of this command to remove a previously specified MSS size for a PPP interface, and restore the default MSS size.

**Syntax**

```
ip tcp adjust-mss {<mss-size>|pmtu}
no ip tcp adjust-mss
```

| Parameter | Description |
|---|---|
| *<mss-size>* | <64-1460> Specifies the MSS size in bytes. |
| pmtu | Adjust TCP MSS automatically with respect to the MTU on the interface. |

**Default** The default setting allows a TCP server or a TCP client to set the MSS value for itself.

**Mode** Interface Configuration

**Usage notes** When a host initiates a TCP session with a server it negotiates the IP segment size by using the MSS option field in the TCP packet. The value of the MSS option field is determined by the Maximum Transmission Unit (MTU) configuration on the host.

You can set a feasible MSS value on the following interfaces:

- PPP
- Ethernet
- Tunnel
- VLAN

**Examples** To configure an MSS size of 1452 bytes on PPP interface ppp0, use the commands:

```
awplus# configure terminal
awplus(config)# interface ppp0
awplus(config-if)# ip tcp adjust-mss 1452
```

To configure an MSS size of 1452 bytes on Ethernet interface eth1, use the commands:

```
awplus# configure terminal
awplus(config)# interface eth1
awplus(config-if)# ip tcp adjust-mss 1452
```

To configure an MSS size of 1452 bytes on interface tunnel2, use the commands:

```
awplus# configure terminal
awplus(config)# interface tunnel2
awplus(config-if)# ip tcp adjust-mss 1452
```

To restore the MSS size to the default size on PPP interface ppp0, use the commands:

```
awplus# configure terminal
awplus(config)# interface ppp0
awplus(config-if)# no ip tcp adjust-mss
```

**Related commands**

mtu (PPP)

show interface

show interface (PPP)

show interface tunnel (GRE)

**Command changes**

Version 5.4.8-2.1: interface tunnel example added

# ipv6 address

**Overview** Use this command to set the IPv6 address of an interface. The command also enables IPv6 on the interface, which creates an EUI-64 link-local address as well as enabling RA processing and SLAAC.

To stop the device from processing prefix information (routes and addresses from the received Router Advertisements) use the command **no ipv6 nd accept-ra-pinfo**.

To remove the EUI-64 link-local address, use the command **no ipv6 eui64-linklocal**.

Use the **no** variant of this command to remove the IPv6 address assigned and disable IPv6. Note that if no global addresses are left after removing the IPv6 address then IPv6 is disabled.

**Syntax**

```
ipv6 address <ipv6-addr/prefix-length>
no ipv6 address <ipv6-addr/prefix-length>
```

| Parameter | Description |
|---|---|
| *<ipv6-addr/prefix-length>* | Specifies the IPv6 address to be set. The IPv6 address uses the format X:X::X:X/Prefix-Length. The prefix-length is usually set between 0 and 64. |

**Mode** Interface Configuration for a VLAN interface, an Eth interface, an 802.1Q sub-interface, a local loopback interface, a PPP interface, a bridge, or a tunnel.

**Usage notes** Note that the device keeps link-local addresses until you remove them with the **no** variant of the command that established them. See the ipv6 enable command for more information.

Also note that the device keeps the link-local address if the global address is removed using a command other than the command that was used to establish the link-local address. For example, if a link local address is established with the ipv6 enable command then it will not be removed using a **no ipv6 address** command.

**Examples** To assign the IPv6 address 2001:0db8::a2/64 to the VLAN interface vlan2, use the commands:

```
awplus# configure terminal
awplus(config)# interface vlan2
awplus(config-if)# ipv6 address 2001:0db8::a2/64
```

To remove the IPv6 address 2001:0db8::a2/64 from the VLAN interface vlan2, use the commands:

```
awplus# configure terminal
awplus(config)# interface vlan2
awplus(config-if)# no ipv6 address 2001:0db8::a2/64
```

To assign the IPv6 address to the PPP interface ppp0, use the commands:

```
awplus# configure terminal
awplus(config)# interface ppp0
awplus(config-fr-subif)# ipv6 address 2001:0db8::a2/64
```

To assign the IPv6 address to the tunnel tunnel0, use the commands:

```
awplus# configure terminal
awplus(config)# interface tunnel0
awplus(config-fr-subif)# ipv6 address 2001:0db8::a2/64
```

To remove the IPv6 address 2001:0db8::a2/64 from the PPP interface ppp0, use the commands:

```
awplus# configure terminal
awplus(config)# interface ppp0
awplus(config-if)# no ipv6 address 2001:0db8::a2/64
```

**Related commands**

ipv6 address autoconfig

ipv6 address dhcp

ipv6 dhcp server

ipv6 enable

ipv6 eui64-linklocal

show running-config

show ipv6 interface

show ipv6 route

# ipv6 tcp adjust-mss

**Overview** Use this command to set the IPv6 Maximum Segment Size (MSS) size for an interface, where MSS is the maximum TCP data packet size that the interface can transmit before fragmentation.

Use the **no** variant of this command to remove a previously specified MSS size for a PPP interface, and restore the default MSS size.

**Syntax**

```
ipv6 tcp adjust-mss {<mss-size>|pmtu}
no ipv6 tcp adjust-mss
```

| Parameter | Description |
|---|---|
| *<mss-size>* | <64-1460> Specifies the MSS size in bytes. |
| pmtu | Adjust TCP MSS automatically with respect to the MTU on the interface. |

**Default** The default setting allows a TCP server or a TCP client to set the MSS value for itself.

**Mode** Interface Configuration

**Usage notes** When a host initiates a TCP session with a server it negotiates the IP segment size by using the MSS option field in the TCP packet. The value of the MSS option field is determined by the Maximum Transmission Unit (MTU) configuration on the host.

You can set a feasible MSS value on the following interfaces:

- PPP
- Ethernet
- Tunnel
- VLAN

**Examples** To configure an IPv6 MSS size of 1452 bytes on PPP interface ppp0, use the commands:

```
awplus# configure terminal
awplus(config)# interface ppp0
awplus(config-if)# ipv6 tcp adjust-mss 1452
```

To configure an IPv6 MSS size of 1452 bytes on Ethernet interface eth1, use the commands:

```
awplus# configure terminal
awplus(config)# interface eth1
awplus(config-if)# ipv6 tcp adjust-mss 1452
```

To adjust IPv6 TCP MSS automatically with respect to the MTU on interface tunnel2, use the commands:

```
awplus# configure terminal
awplus(config)# interface tunnel2
awplus(config-if)# ipv6 tcp adjust-mss pmtu
```

To restore the MSS size to the default size on PPP interface ppp0, use the commands:

```
awplus# configure terminal
awplus(config)# interface ppp0
awplus(config-if)# no ipv6 tcp adjust-mss
```

**Related commands**

mtu (PPP)

show interface

show interface (PPP)

show interface tunnel (GRE)

**Command changes**

Version 5.4.8-2.1: interface tunnel example added

# mtu

**Overview** Use this command to set the Maximum Transmission Unit (MTU) size for interfaces, where MTU is the maximum packet size that interfaces can transmit. The MTU size setting is applied to both IPv4 and IPv6 packet transmission.

Use the **no** variant of this command to remove a previously specified Maximum Transmission Unit (MTU) size, and restore the default MTU size. For example the VLAN interface default is 1500 bytes.

**Syntax**

```
mtu <68-1582>
no mtu
```

**Default** The default MTU size, for example 1500 bytes for VLAN interfaces.

**Mode** Interface Configuration

**Usage notes** If a device receives an IPv4 packet for Layer 3 switching to another interface with an MTU size smaller than the packet size, and if the packet has the '**don't fragment**' bit set, then the device will send an ICMP '**destination unreachable**' (3) packet type and a '**fragmentation needed and DF set**' (4) code back to the source. For IPv6 packets bigger than the MTU size of the transmitting interface, an ICMP '**packet too big**' (ICMP type 2 code 0) message is sent to the source.

You can set an MTU value on the following interfaces:

- PPP
- Ethernet
- Tunnel
- VLAN

Note that you cannot configure MTU on bridge interfaces. The MTU of the bridge interface is determined by the member interface of the bridge which has the lowest MTU. For example, if you attach eth1 with MTU 1200, ppp1 with MTU 1400, and vlan1 with MTU 1500 to a bridge interface, the MTU for that interface will be 1200.

Note that show interface output will only show MTU size for VLAN interfaces.

**Examples** To configure an MTU size of 1555 bytes on vlan2, use the commands:

```
awplus# configure terminal
awplus(config)# interface vlan2
awplus(config-if)# mtu 1555
```

To configure an MTU size of 1555 bytes for tunnel 'tunnel2', use the commands:

```
awplus# configure terminal
awplus(config)# interface tunnel2
awplus(config-if)# mtu 1555
```

To restore the MTU size to the default MTU size of 1500 bytes on vlan2, use the commands:

```
awplus# configure terminal
awplus(config)# interface vlan2
awplus(config-if)# no mtu
```

**Related commands**

show interface

# show interface tunnel (IPv6)

**Overview** Use this command to display status information of tunnels.

The tunnel remains inactive if no valid tunnel source or tunnel destination is configured.

**Syntax** `show interface tunnel<tunnel-index>`

| Parameter | Description |
|---|---|
| `tunnel` | Specify this parameter to display tunnel status information of a given tunnel identified by the <0-255> parameter. |
| *<0-255>* | Specify a tunnel index in the range from 0 through 255. |

**Mode** Privileged Exec

**Example** To display status information for IPv6 tunnel `tunnel20`, use the command:

```
awplus# show interface tunnel20
```

Figure 80-1: Example output from the **show interface tunnel** command

```
awplus#show interface tunnel20
Interface tunnel20
  Link is UP, administrative state is UP
  Hardware is Tunnel
  IPv4 address 192.168.10.1/24 pointopoint 192.168.10.255
  index 4751 metric 1 mtu 1480
  arp ageing timeout 300
  <UP,POINTOPOINT,RUNNING,MULTICAST>
  SNMP link-status traps: Disabled
  Tunnel source 2001:db8::1:1, destination 2001:db8::2:1
  Tunnel name local 2001:db8::1:1, remote 2001:db8::2:1
  Tunnel ID local (not set), remote (not set)
  Tunnel protocol/transport ipv6, key disabled, sequencing disabled
  Tunnel TTL 64
  Checksumming of packets disabled, path MTU discovery disabled
    input packets 0, bytes 0, dropped 0, multicast packets 0
    output packets 0, bytes 0, multicast packets 0 broadcast packets 0
  Time since last state change: 0 days 22:38:35
```

**Command changes** Version 5.4.8-2.1: command added

# tunnel destination (IPv6)

**Overview** Use this command to specify a tunnel destination for the remote end of the tunnel. Tunnel destination can be specified by using a destination network name or an IPv6 address.

Use the **no** variant of this command to remove a configured tunnel destination.

**Syntax**

```
tunnel destination {<ipv6-addr>|<destination-network-name>}
no tunnel destination
```

| Parameter | Description |
|---|---|
| *<ipv6-addr>* | Specify the tunnel destination IPv6 address in the dotted decimal format x:x::x:x.<br>The endpoints of the tunnel must be configured by mirroring IP addresses, that is, the tunnel source on one endpoint must be specified as the tunnel destination on the other endpoint. |
| *<destination-network-name>* | Destination network name.<br>If the destination network name cannot be resolved, then the IPv6 tunnel remains inactive. |

**Mode** Interface Configuration

**Examples** To configure an IPv6 tunnel destination by using an IPv6 address, use the commands:

```
awplus# configure terminal
awplus(config)# interface tunnel40
awplus(config-if)# tunnel mode ipv6
awplus(config-if)# tunnel destination 2001:db8::1:1
```

To configure an IPv6 tunnel destination by using a destination network name, use the commands:

```
awplus# configure terminal
awplus(config)# interface tunnel40
awplus(config-if)# tunnel mode ipv6
awplus(config-if)# tunnel destination
corporate_lan.example.com
```

To remove a IPv6 tunnel destination, use the commands:

```
awplus# configure terminal
awplus(config)# interface tunnel40
awplus(config-if)# no tunnel destination
```

**Related commands** interface tunnel (IPv6)

tunnel mode (IPv6)

tunnel source (IPv6)

**Command changes**

Version 5.4.8-2.1: command added

# tunnel dscp

**Overview** Use this command to configure the Differentiated Services Code Point (DSCP) value for the DSCP field in the packet header that encapsulates the tunneled packets.

Use the **no** variant of this command to reset the DSCP field to its default value.

**Syntax**

```
tunnel dscp <0-63>
no tunnel dscp
```

| Parameter | Description |
|---|---|
| *<0-63>* | Specify the DSCP value in the range from 0 through 63 for the DSCP field in the packet header that encapsulates the tunneled packets. |

**Default** The IPv4 DSCP field value is inherited from the inner header to the outer header.

**Mode** Interface Configuration

**Examples** To configure the DSCP value to 10 for tunnel2, use the commands:

```
awplus# configure terminal
awplus(config)# interface tunnel2
awplus(config-if)# tunnel dscp 10
```

To remove a configured DSCP value for tunnel2, use the commands:

```
awplus# configure terminal
awplus(config)# interface tunnel2
awplus(config-if)# no tunnel dscp
```

**Related commands** interface tunnel (IPv6)

interface tunnel (GRE)

# tunnel mode (IPv6)

**Overview**

Use this command to configure the encapsulation tunneling mode to use. This command sets IPv6 tunneling.

Use the **no** variant of this command to remove an established tunnel.

**Syntax**

```
tunnel mode ipv6
no tunnel mode
```

**Default**

Virtual tunnel interfaces have no mode set by default.

**Mode**

Interface Configuration

**Usage notes**

A tunnel will not become operational until it is configured with this command.

**Examples**

To configure IPv6 as the encapsulation mode for tunnel2, use the commands:

```
awplus# configure terminal
awplus(config)# interface tunnel2
awplus(config-if)# tunnel mode ipv6
```

To remove a configured IPv6 tunnel mode for tunnel2, use the commands:

```
awplus# configure terminal
awplus(config)# interface tunnel2
awplus(config-if)# no tunnel mode
```

**Related commands**

interface tunnel (IPv6)

**Command changes**

Version 5.4.8-2.1: command added

# tunnel source (IPv6)

**Overview** Use this command to specify a tunnel source for the tunnel interface. Tunnel source can be specified by using an interface name or an IPv6 address. The source address must be an existing IPv6 address configured for an interface.

Use the **no** variant of this command to remove a tunnel source for a tunnel interface.

**Syntax**

```
tunnel source {<ipv6-addr>|<interface-name>}
no tunnel source
```

| Parameter | Description |
|---|---|
| *<ipv6-addr>* | Specify the tunnel source IPv6 address for the IPv6 tunnel interface in the dotted decimal format x:x::x:x.<br>The endpoints of the tunnel must be configured by mirroring IP addresses, that is, the tunnel source on one endpoint must be specified as the tunnel destination on the other endpoint. |
| *<interface-name>* | Available interface name. Any AlliedWare Plus interface type (eth, vlan, ppp, tunnel, lo and so on).<br>Using interface name can minimize the number of user-configured IP addresses and allow the tunnel source IP address to be dynamically issued via, for example, DHCP. |

**Mode** Interface Configuration

**Examples** To configure an IPv6 tunnel source IPv6 address, use the commands:

```
awplus# configure terminal
awplus# interface eth1
awplus(config-if)# ip address 2001:db8::1:1/48
awplus(config-if)# interface tunnel1
awplus(config-if)# tunnel mode ipv6
awplus(config-if)# tunnel source 2001:db8::1:1
```

To use an interface name as the tunnel source, use the commands:

```
awplus# configure terminal
awplus(config)# interface tunnel2
awplus(config-if)# tunnel mode ipv6
awplus(config-if)# tunnel source eth1
```

To remove an IPv6 tunnel source, use the commands:

```
awplus# configure terminal
awplus(config)# interface tunnel1
awplus(config-if)# no tunnel source
```

**Related commands**

interface tunnel (IPv6)

tunnel destination (IPv6)

tunnel mode (IPv6)

**Command changes**

Version 5.4.8-2.1: command added

# tunnel ttl

**Overview** Use this command to configure the value to use for the Time to Live (TTL) field in the IPv4 header that encapsulates the tunneled IPv4 or IPv6 packets.

Use the **no** variant of this command to set the TTL value to its default.

**Syntax**

```
tunnel ttl <1-255>
no tunnel ttl
```

| Parameter | Description |
|---|---|
| *<1-255>* | TTL value from 1 through 255. |

**Default** The default TTL value is inherited from the encapsulated packet.

**Mode** Interface Configuration

**Example** To set the TTL value of the packet to 255, use the commands:

```
awplus# configure terminal
awplus(config)# interface tunnel20
awplus(config-if)# tunnel ttl 255
```

To remove the configured TTL value of the packet, use the commands:

```
awplus# configure terminal
awplus(config)# interface tunnel20
awplus(config-if)# no tunnel ttl
```

**Related commands** interface tunnel (IPv6)

interface tunnel (GRE)