Solutions Guide

Allied Telesis™

Building distributed network cores with Allied Telesis switches

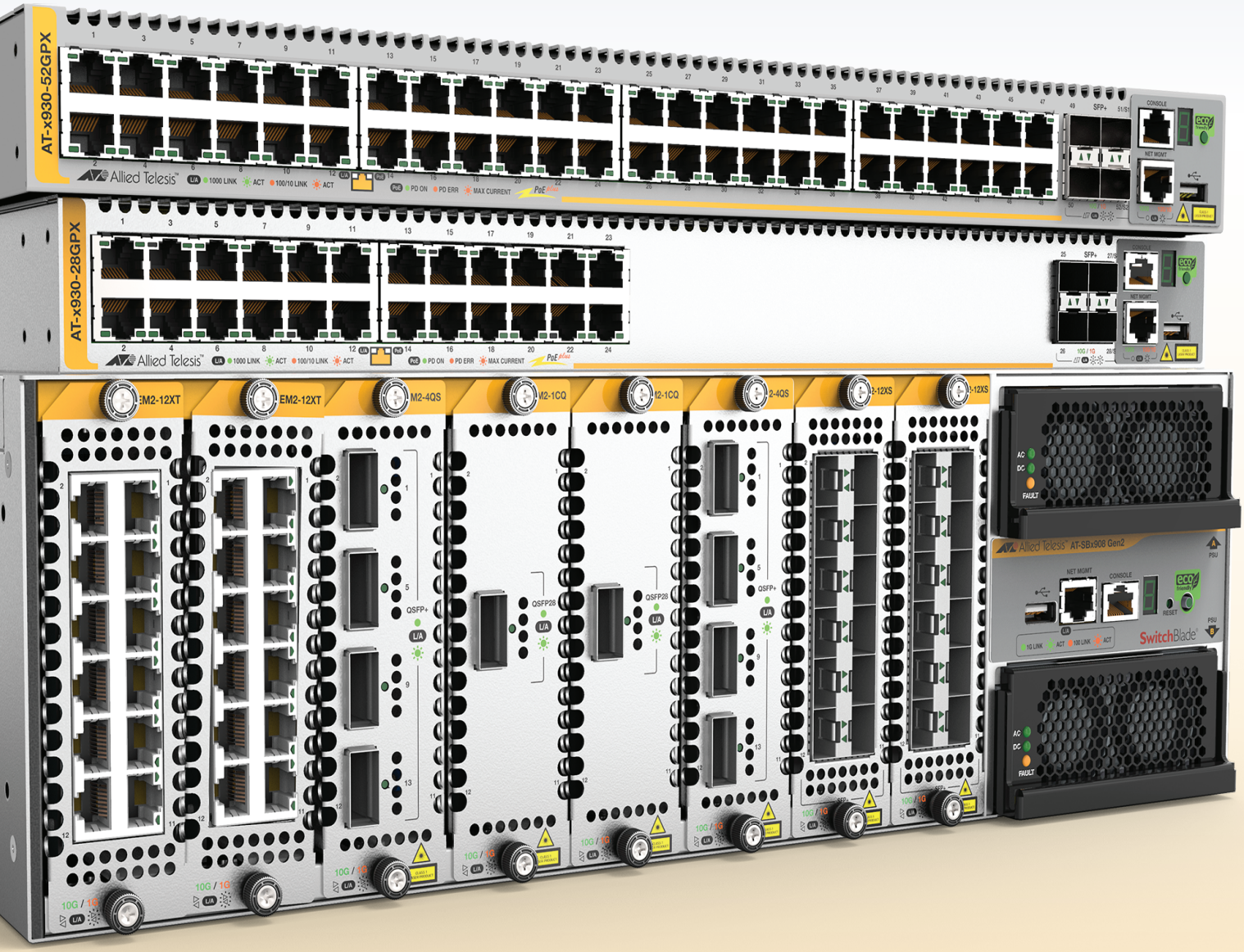

NETWORK SMARTER

Introduction

Modern networks have become a fundamental component of the way we interact and conduct business. A highly reliable and high performing network is now essential in most activities, from education to data management to commerce.

Today's students make use of technology like never before, and access to online resources and applications is seen as an integral part of the learning experience. Lectures on demand, online e-learning activities and access to the Internet are expected norms in a campus environment.

Businesses also rely on online resources more than ever, with everything from standard access to email and servers, to business critical applications requiring a high availability network. This is even more pronounced where data storage is employed. Access to important information must be continuous. Multiple copies of critical data are often kept to guarantee availability and minimise any possibility of loss.

Allied Telesis provides advanced distributed network core solutions, which ensure data availability in campus environments, and also for businesses utilising data and service replication between separate sites.

EPSRing™

VCStack™ LD

Distributed network cores

The decision to implement the network core in a physically distributed form can be driven by simple considerations of feasibility, and/or by the requirements of disaster recovery.

In a campus environment, it is frequently not feasible for the network core to be in a single physical location. Departments as diverse as engineering, graphic design, science and administration all require large volume online storage and applications. Separate localised servers are often employed to meet specialized needs, and differing service requirements. Therefore, it is often natural for a campus network to consist of a distributed set of network cores, with high-speed, resilient connectivity between the individual sub-cores. This is shown in the diagram below.

The requirements of disaster recovery lead to network cores, and even network operation centres, being duplicated at 2 or more physically separated locations. This provides consistent availability of information and the knowledge that critical data is always right there when it's required. Complete data and service replication between the separate sites enable operations to continue even if one (or more) of the sites is completely out of service. The speed and reliability of the data replication between the sites is critical to the success of a disaster recovery solution. If there are significant discrepancies between the data sets at the different sites, then failover will not be seamless.

Distributed network core solutions require high performance and high availability, without adding unnecessary layers of complexity to the network or its management. The ideal network for a distributed core environment will provide additional reliability and performance, while maintaining ease of use.

Campus Network

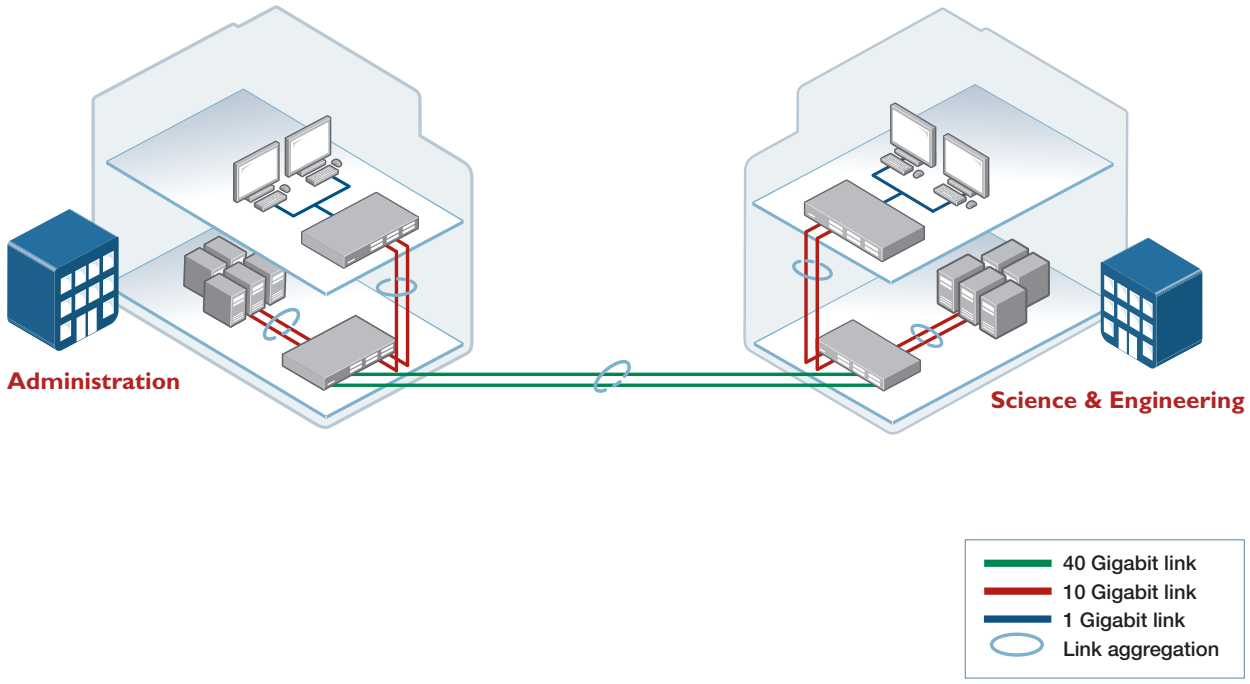

Allied Telesis distributed core solutions

Allied Telesis provides two technologies upon which a distributed network core can be built:

- EPSR
- Long Distance Stacking

Let us first take a brief overview of each of these technologies, and then move on to consideration of the benefits that each technology provides.

EPSR

Ethernet Protection Switching Ring (EPSR) is a mechanism for preventing data loops in ring topologies. It has a very fast recovery time in the event of broken links or switches going out of service. The recovery time can be as low as 50ms.

As well as EPSR, Allied Telesis switches also support the standards-based G.8032 Ethernet Ring Protection protocol. G.8032 ring protection can be deployed stand-alone, or can inter-operate with an EPSR network.

EPSR can be implemented on any Ethernet ring – and be run on links utilizing today's fastest Ethernet standards, right up to 100Gbps. The network topology within which EPSR can operate is not confined to a single ring. The Super-Loop Protection feature, an extension of EPSR, enables it to operate across a more complex topology. It can operate on multiple rings, with multiple connection points between any pair of rings. This provides a very flexible solution that can be tailored to suit any scenario.

The diagram below shows EPSR used in a campus environment, with multiple rings providing high-speed connectivity between the various departments.

Campus Network with multiple EPSR rings

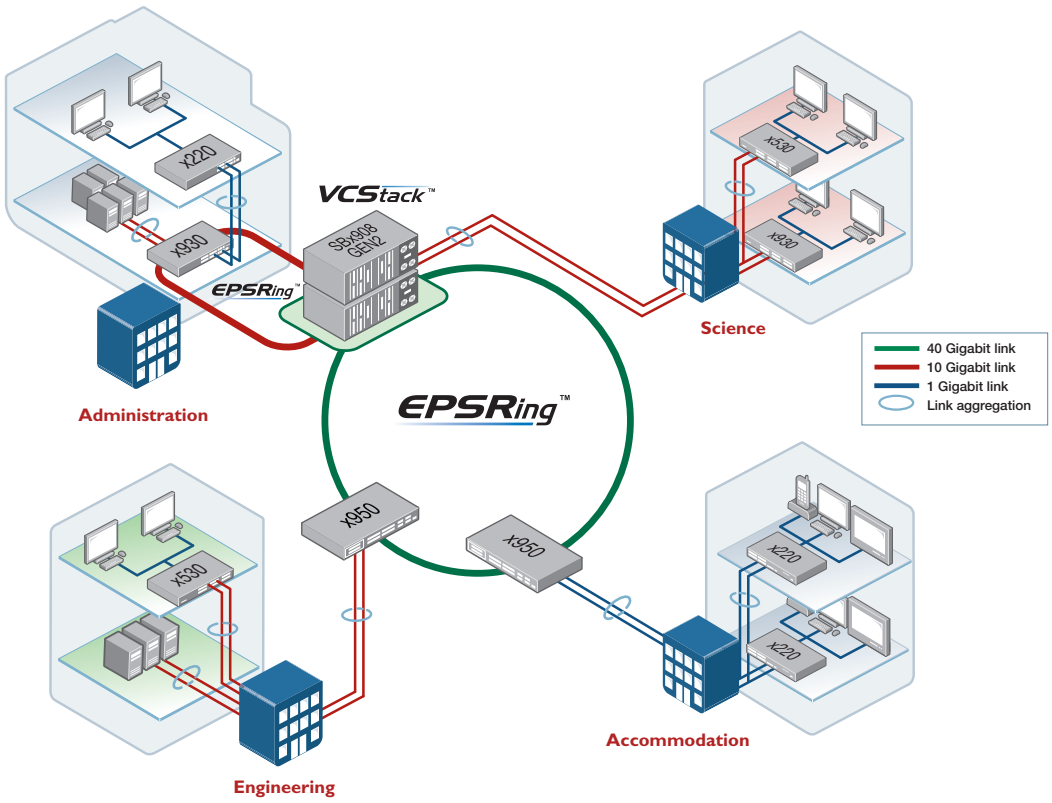

Long Distance Stacking

With Virtual Chassis Stacking (VCStack), Allied Telesis provides a truly resilient network. In normal operation, all bandwidth and all routing power in the network are fully available for use all the time. If a link or device fails, some of the bandwidth or forwarding power will be lost, but the network will still be fully operational and all remaining resources will continue to be fully utilized.

Long distance stacking enables the VCStack solution to provide a distributed network core. The increased distance provided by fiber stacking connectivity means that members of the virtual chassis do not have to be collocated. Instead, they can be kilometres apart. The distance is limited only by the capabilities of the pluggable devices that are driving the signal down the fibre cables that connect the switches.

All of the benefits and powerful features of VCStack remain exactly the same. So the switches in a long-distance stacking solution all operate as a single switch – with completely shared software and hardware forwarding tables, a single shared configuration script, support for link aggregation and port mirroring between stack members and so on.

The diagram below shows Long Distance Stacking used to connect 2 mirrored data centers together. This single virtual distributed core ensures high availability of data for network users.

Data mirroring solution using Long Distance Stacking

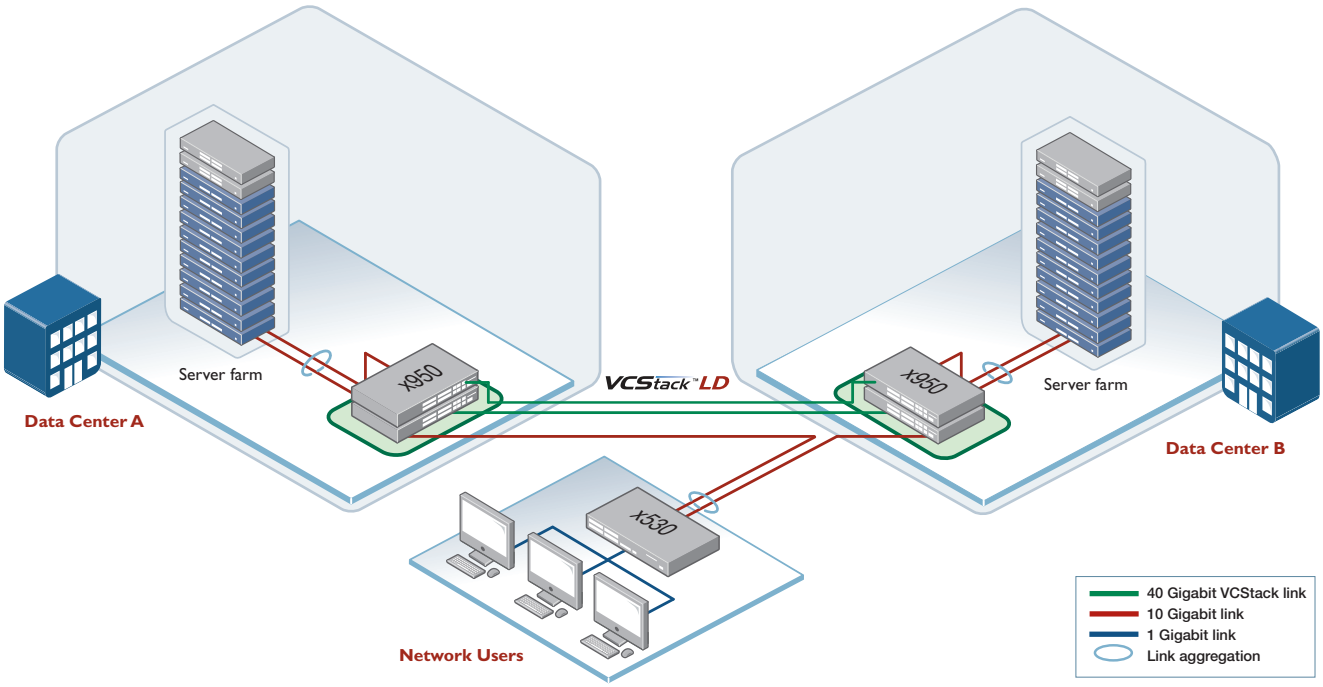

Allied Telesis distributed core benefits

EPSR and Long Distance VCStack are both excellent options for building a distributed network core. They do, however, provide different benefits in different scenarios.

The prime benefits of Long Distance Stacking

Near zero traffic loss on link or unit failure

If access/distribution switches are connected to multiple stack members by resilient links, then the time required for traffic to recover from one of those stack members going down is simply the time to failover over from using both resilient links to using just one. This can be almost instantaneous.

The diagram shows link aggregation between the core stack members and access switches. This ensures no perceptible disruption in the case of a link or device failure. Link aggregation is also used to connect network resources, such as servers, across the virtual chassis members.

Network operation

Normal network operation

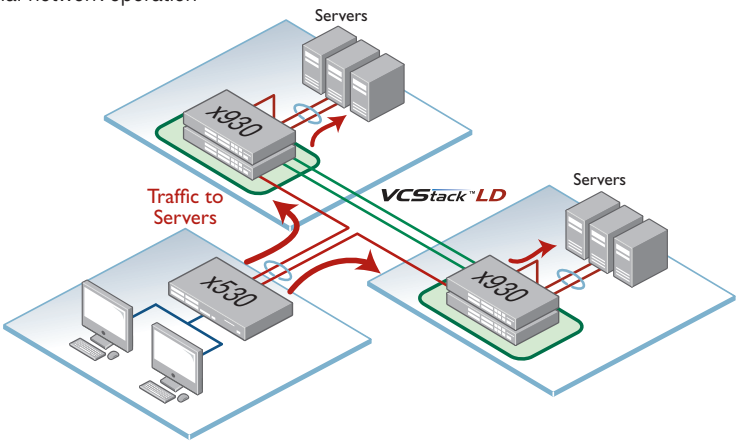

Link failure

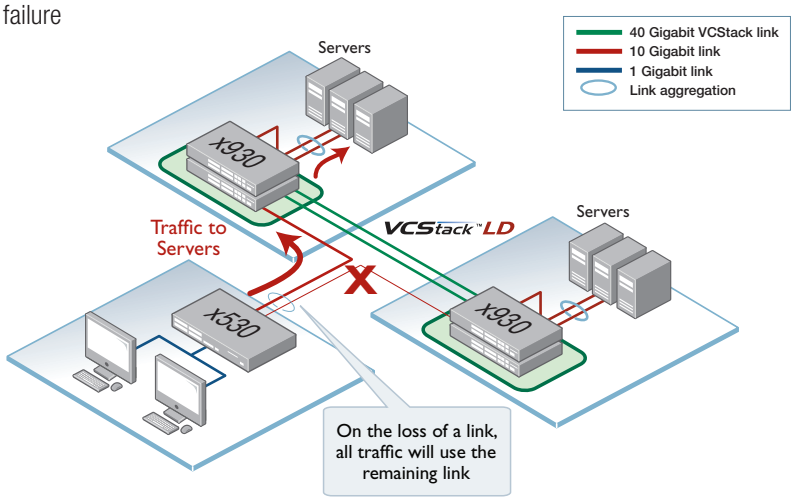

Benefits of Long Distance Stacking

Ease of management

The long-distance VCStack core operates as a single switch, and is managed as a single device. Logging into any stack member gives instant access to the management interface of all the stack members. The forwarding tables, port states, and other operational information of the stack members are all presented together, as the stack is operating as a virtual chassis.

Pre-configuration of network devices

To add flexibility to the management of a VCStack, provisioning provides the ability to pre-configure (or configure 'offline') the switch ports of devices that are not currently physically present. This allows a network administrator to configure the ports of an additional VCStack member before it is actually hot-swapped in. On the physical addition of the unit, the configuration is automatically applied. This minimizes network disruption.

Simple stack member replacement

If a stack member has to be swapped out, then the replacement unit can simply be connected in its place, and will automatically join the stack, and receive the full stack configuration script. This, of course, includes the portion of configuration that is relevant to that unit, which it will automatically install and run. This facilitates effortless hot-swap of units if required.

Protocol simplification

No layer-3 unicast or multicast routing protocols need to be in operation between the core switches. The forwarding table synchronization that is inherent within the stack formation means that no routing protocols need to be configured for advertising route tables between the core switches. A VCStack core acts and responds as a truly virtual chassis.

VCStack™ LD

Benefits of EPSR

The prime benefits of EPSR are:

Support for a mixed-product environment

The switches comprising the distributed core can be any combination of x-series switches that support EPSR. This is rather more flexible than Long Distance Stacking, which requires all the switches in the core are the same series (for example, all x930 switches). If high port density is required at each location on the ring, then stacks of switches can be used.

Flexibility in ring topology and size

There is no limit on the number of units that can be connected in an EPSR ring, whereas Long Distance Stacking is limited (depending on the switch series used) to a maximum of 8 units. Moreover, EPSR can be used in a multiple-ring topology, giving a higher level of path resiliency. This allows for large distributed networks to be created, meeting the needs of business sectors such as transportation.

High bandwidth between the core switches

When using x-series switches in an EPSR ring, the links within the ring can be aggregates of 10, 40 or even 100-gigabit links, providing hundreds of gigabits-per-second if required.

Note that an EPSR solution does not provide the Virtual-Chassis benefits that Long Distance Stacking provides. Each unit in the EPSR ring is a separately managed unit, and there is no synchronization of forwarding tables or configurations between the units.

EPSRing™

Summary

A distributed network core is an ideal method for supporting disaster recovery solutions and large campus environments. Allied Telesis provides two leading technologies for building highly reliable distributed network cores - Long Distance Stacking and EPSR.

Each of these technologies has its own advantages in terms of ease of management, configuration simplicity, scalability and recovery time. Depending on network requirements, one or other of these technologies will provide an ideal solution for a wide range of distributed-core networks.

BENEFIT	LONG DISTANCE STACKING	EPSR
Near zero traffic loss on link or unit failure	✔	✔
Ease of management	✔	
Pre-configuration of network devices	✔	
Simple replacement of failed units	✔	
Protocol simplification	✔	
Support for a mixed-product environment		✔
Flexibility in ring topology and size		✔
High bandwidth between core switches	✔	✔

Providing exceptionally high network availability and simplicity of operation, Allied Telesis products and advanced features have the ability to guarantee access to information when it's needed.

About Allied Telesis

For more than 30 years, Allied Telesis has been delivering reliable, intelligent connectivity for everything from enterprise organizations to complex, critical infrastructure projects around the globe.

In a world moving toward Smart Cities and the Internet of Things, networks must evolve rapidly to meet new challenges. Allied Telesis smart technologies, such as Allied Telesis Autonomous Management Framework™ (AMF) and Enterprise SDN, ensure that network evolution can keep pace, and deliver efficient and secure solutions for people, organizations, and "things"—both now and into the future.

Allied Telesis is recognized for innovating the way in which services and applications are delivered and managed, resulting in increased value and lower operating costs.
Visit us online at **alliedtelesis**.com

Allied Telesis™ NETWORK SMARTER

North America Headquarters | 19800 North Creek Parkway | Suite 100 | Bothell | WA 98011 | USA | T: +1 800 424 4284 | F: +1 425 481 3895
Asia-Pacific Headquarters | 11 Tai Seng Link | Singapore | 534182 | T: +65 6383 3832 | F: +65 6383 3830
EMEA & CSA Operations | Incheonweg 7 | 1437 EK Rozenburg | The Netherlands | T: +31 20 7950020 | F: +31 20 7950021

alliedtelesis.com

C618-31026-00 REV C